APPLICATION FOR OSHPD PREAPPROVAL OF MANUFACTURER'S CERTIFICATION (OPM)

OFFICE USE ONLY
APPLICATION #: OPM-0312-13

OSHPD Preapproval of Manufacturer's Certification (OPM)

Type: ☒ New ☐ Renewal ☐ Update to Pre-CBC 2013 OPA Number: _____

Manufacturer Information

Manufacturer: **Samsung**

Manufacturer's Technical Representative: Ninad Gujar

Mailing Address: 14 Electronics Ave., Danvers, MA. 01923

Telephone: On FIle Email: On File

Product Information

Product Name: **GC80 & GC85A Patient Table**

Product Type: Other Mechanical and Electrical Components

Product Model Number: GC80 & GC85A

General Description: Digital Radiography system component

REVIEWED FOR CODE COMPLIANCE
OSHPD
OPM-0314-13
BY: Jeffrey Y. Kikumoto
DATE: 04/13/2016
CALIFORNIA BUILDING CODE, 2013

Applicant Information

Applicant Company Name: **EASE Co.**

Contact Person: Jonathan Roberson, S.E.

Mailing Address: 5877 Pine Ave. Suite 210, Chino Hills, CA. 91709

Telephone: (909) 606-7622 Email: J.Roberson@EASECo.com

I hereby agree to reimburse the Office of Statewide Health Planning and Development review fees in accordance with the California Administrative Code, 2013.

Signature of Applicant: _____ Date: 2/9/16

Title: Principal Engineer Company Name: **EASE Co.**

Registered Design Professional Preparing Engineering Recommendations

Company Name: **EASE Co.**

Name: Jonathan Roberson, S.E. California License Number: S4197

Mailing Address: 5877 Pine Ave. Suite 210, Chino Hills, CA. 91709

Telephone: 909-606-7622 Email: J.Roberson@EASECo.com

OSHPD Special Seismic Certification Preapproval (OSP)

☐ Special Seismic Certification is preapproved under OSP-
(Separate application for OSP is required)

☒ Special Seismic Certification is not preapproved

Certification Method(s)

☐ Testing in accordance with: ☐ ICC-ES AC156 ☐ FM 1950-10

☐ Other* (Please Specify):

*Use of test criteria other than those adopted by the California Building Standards Code, 2013 (CBSC 2013) for component supports and attachments are not permitted. For distribution system, interior partition wall, and suspended ceiling seismic bracings, test criteria other than those adopted in the CBSC 2013 may be used when approved by OSHPD prior to testing.

☒ Analysis

☐ Experience Data

☐ Combination of Testing, Analysis, and/or Experience Data (Please Specify):

List of Attachments Supporting the Manufacturer's Certification

☐ Test Report ☒ Drawings ☒ Calculations ☐ Manufacturer's Catalog

☐ Other(s) (Please Specify):

REVIEWED FOR CODE COMPLIANCE
CALIFORNIA BUILDING CODE, 2013
oshpd
BY: Jeffrey Y. Kikumoto
DATE: 04/13/2016

OFFICE USE ONLY – OSHPD APPROVAL VALID FOR CBC 2013 ONLY

Signature: Date: 04/25/2016

Print Name: Jeffrey Kikumoto

Title: SSE

Condition of Approval (if applicable):

EASE
EQUIPMENT ANCHORAGE
& SEISMIC ENGINEERING

5877 Pine Ave, Ste. 210
Chino Hills, CA. 91709
Phn: (909) 606-7622

Office of Statewide Health Planning and Development

PREAPPROVAL OF MANUFACTURER'S CERTIFICATION

OPM-0312-13

THIS PREAPPROVAL CONFORMS TO THE 2013 CALIFORNIA BUILDING CODE

MANUFACTURER: **SAMSUNG**

EQUIPMENT NAME: **GC80 & GC85A PATIENT TABLE**

Date: 3/7/16

GENERAL NOTES

1. THIS OSHPD PREAPPROVAL OF MANUFACTURER'S CERTIFICATION (OPM) IS BASED ON THE 2013 CBC. THE DEMANDS (DESIGN FORCES) FOR USE WITH THIS OPM SHALL BE BASED ON THE 2013 CBC
2. THIS DOCUMENT MAY ONLY BE USED WITH THE EXPRESS WRITTEN CONSENT OF THE MANUFACTURER LISTED ABOVE FOR THE SPECIFIC PROJECT SITE AND INSTALLATION LOCATION. THIS DOCUMENT IS INVALID WITHOUT SUCH CONSENT.
3. THIS PREAPPROVAL CONFORMS TO THE 2013 CALIFORNIA BUILDING CODE WHERE S_{DS} IS NOT GREATER THAN 2.20.
4. FORCES PER ASCE 7-10 SECTION 13.3.1, EQUATIONS 13.3-1, 13.3-2 & 13.3-3, WHERE S_{DS} = 2.20, a_p = 1.0, I_p = 1.5, R_p = 1.5, z/h = 0 AT CONCRETE SLAB & z/h $\leq$ 1 AT CONCRETE SLAB ON METAL DECK. SEE FOLLOWING SHEETS FOR Ω_0
5. THIS PREAPPROVAL COVERS ONLY THE SUPPORTS AND ATTACHMENTS OF THE EQUIPMENT TO THE STRUCTURE.
6. ALL DESIGN FORCES SHOWN ON THE DRAWINGS ARE FACTORED LOADS THAT SHALL BE USED FOR STRENGTH DESIGN.
7. CONCRETE SLAB ON METAL DECK DETAIL VALID FOR DEMANDS SHOWN AT ANY ELEVATION IN THE BUILDING. (i.e. z/h $\leq$ 1)
8. CONCRETE SLAB ON GRADE DETAIL VALID FOR DEMANDS SHOWN AT ANY ELEVATION BELOW GRADE. (i.e. z/h = 0)
9. **RESPONSIBILITIES OF THE STRUCTURAL ENGINEER OF RECORD OF THE BUILDING**

   A. PROVIDE SUPPORTING STRUCTURE TO SUPPORT WEIGHTS AND FORCES SHOWN IN ADDITION TO ALL OTHER LOADS.

   B. VERIFY THAT THE INSTALLATION IS IN CONFORMANCE WITH THE 2013 CBC AND WITH THE DETAILS, MATERIAL AND GAGE OF THE UNIT WHERE ATTACHMENTS ARE MADE AGREE WITH THE INFORMATION SHOWN ON THE PREAPPROVAL DOCUMENTS.

   C. VERIFY THAT PROJECT SPECIFIC VALUES OF S_{DS} & z/h RESULT IN SEISMIC FORCES (E_h, E_v) THAT DO NOT EXCEED THE VALUES ON THE DETAILS.

   D. VERIFY THAT THE CONCRETE SLAB TO WHICH THE EQUIPMENT IS ANCHORED MEETS THE REQUIREMENTS OF THE APPLICABLE ICC ESR.

   E. VERIFY THAT THE ANCHORS ARE AN ADEQUATE DISTANCE FROM ANY SLAB EDGES OR OPENINGS (SEE TYPICAL DETAIL ON SHEET 2).

   F. VERIFY THAT ALL NEW OR EXISTING ANCHORS ARE AN ADEQUATE DISTANCE FROM THE UNIT ATTACHMENTS AND CHECK FOR INTERACTION WHERE OTHER ANCHORS ARE WITHIN 18" OR 6hef FROM THIS UNIT'S ANCHORS.

REGISTERED PROFESSIONAL ENGINEER
JONATHAN ROBERSON
No. 4197
EXP. 6-30-2016
3/7/16
STRUCTURAL
STATE OF CALIFORNIA

NOT STRUCTURAL ENGINEER OF RECORD

SAMSUNG

GC80 & GC85A PATIENT TABLE

DES.	J. ROBERSON	SHEET 2
JOB NO.	11-1529	
DATE	3/7/16	OF 7 SHEETS

10. **EXPANSION ANCHORS:**

A. ATTACHMENT IS TO BE MADE WITH THE ANCHORS LISTED BELOW AND INSTALLED AS DESCRIBED IN THE CORRESPONDING ICC REPORT.

Anchor Diameter	Concrete Type	Min. f'c (psi)	Anchor Type	ICC Report No.	Min. Embed.	Min. Spacing	Min. Edge Dist.	Min. Conc. Thickness	Torque Test	Direct Tension
3/8"	Sand Light Weight	3000	Hilti Kwik Bolt TZ	ESR-1917	2"	N/A	N/A	See Sheet 7 of 7	25 FT-LB	1173 lb
5/8"	Normal Weight	3000	Hilti Kwik Bolt TZ	ESR-1917	2"	8"	12"	4"	60 FT-LB	1818 lb

B. THIS PREAPPROVAL ALLOWS FOR UP TO A MAXIMUM OF 2 ADJACENT CONCRETE SLAB EDGES, 12" AWAY MINIMUM (i.e. - CORNER). SEE ADJACENT DETAIL FOR ADDITIONAL MINIMUM ALLOWABLE CONCRETE EDGE DISTANCES.

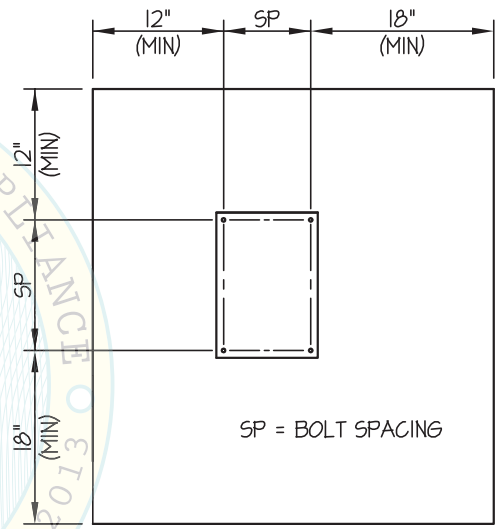

TYPICAL CONCRETE EDGE DETAIL

C. TESTING OF EXPANSION ANCHORS PER 2013 CBC, 1913A.7: TESTING SHALL BE DONE IN THE PRESENCE OF THE SPECIAL INSPECTOR AND A REPORT OF THE TEST RESULTS SHALL BE SUBMITTED TO OSHPD

(i) AFTER AT LEAST 24 HOURS HAVE ELAPSED SINCE INSTALLATION, DIRECT PULL TENSION TEST OR TORQUE TEST AT LEAST 50% OF THE ANCHORS.

(ii) ACCEPTANCE CRITERIA:

- DIRECT TENSION TEST: THE ANCHOR SHOULD HAVE NO OBSERVABLE MOVEMENT AT THE TEST LOAD. A PRACTICAL WAY TO DETERMINE OBSERVABLE MOVEMENT IS THAT THE WASHER BECOMES LOOSE.
- TORQUE TEST: THE APPLICABLE TORQUE MUST BE ACHIEVED WITHIN THE FOLLOWING LIMITS: WEDGE TYPE : 1/2 TURN OF THE NUT

(iii) IF ANY ANCHOR FAILS, TEST ALL ANCHORS.

D. AVOID DAMAGING EXISTING STEEL REINFORCING IN CONCRETE SLAB WHEN INSTALLING CONCRETE EXPANSION ANCHORS.

E. PROVIDE FOR FULL THREAD ENGAGEMENT OF NUT & WASHER.

11. BOLTS THROUGH CONCRETE ON METAL DECK

A. BOLTS SHALL BE TORQUED BY 3/4 TURN OF THE NUTS AFTER THE SNUG TIGHT (THE SNUG-TIGHT CONDITION IS DEFINED AS THE TIGHTNESS REQUIRED TO BRING THE CONNECTED PLIES INTO FIRM CONTACT) CONDITION IS ACHIEVED, UNLESS OTHERWISE NOTED.

B. THROUGH BOLT HOLES SHALL BE 1/16" LARGER THAN BOLT SIZE (HOLE SIZE = BOLT SIZE + 1/16) FOR CONCRETE.

C. THROUGH-BOLTS IN CONCRETE SHALL RECEIVE SPECIAL INSPECTION AND TESTING (THROUGH BOLTS WITH STEEL TO STEEL CONNECTION IN TENSION DO NOT REQUIRE TENSION TESTING) IN ACCORDANCE WITH REQUIREMENTS FOR POST-INSTALLED ANCHORS.

REVIEWED FOR CODE COMPLIANCE
OSHPD
OPM-0314-13
BY: Jeffrey Y. Kikumoto
DATE: 04/25/2016
CALIFORNIA BUILDING CODE, 2013

REGISTERED PROFESSIONAL ENGINEER
JONATHAN ROBERSON
No. 4197
EXP. 6-30-2016
3/7/16
STRUCTURAL
STATE OF CALIFORNIA

NOT STRUCTURAL ENGINEER OR RELEASED

SAMSUNG

GC80 & GC85A PATIENT TABLE

DES. J. ROBERSON
JOB NO. 11-1529
DATE 3/7/16

SHEET 3 OF 7 SHEETS

SEISMIC SUPPORTS & ATTACHMENTS

CONCRETE SLAB

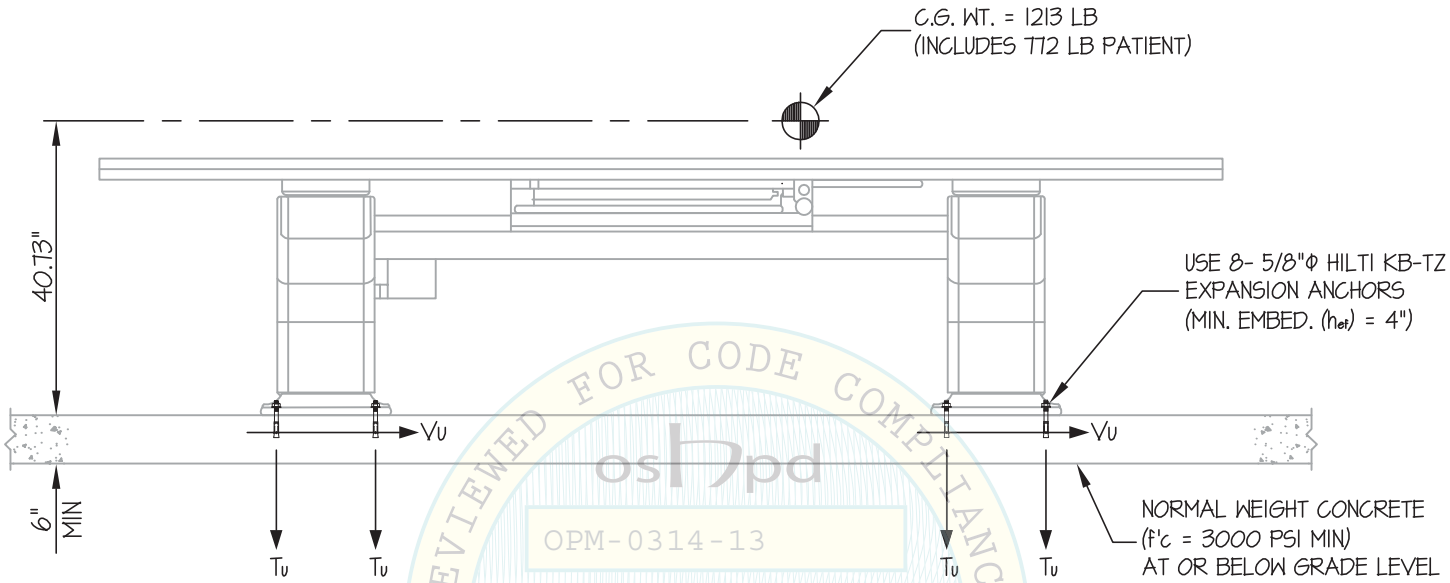

Tu = 2575 LB/BOLT (MAX)
Vu = 336 LB/BOLT (MAX)
(VALUES INCLUDE Ω_o)

FRONT ELEVATION

REVIEWED FOR CODE COMPLIANCE
CALIFORNIA BUILDING CODE, 2013
oshpd
OPM-0314-13
BY: Jeffrey Y. Kikumoto
DATE: 04/13/2016

NOTES:

1. **FORCES ARE DETERMINED PER 2013 CALIFORNIA BUILDING CODE AND ASCE 7-10**
   STRENGTH DESIGN IS USED. (S_{DS} = 2.20, a_p = 1.0, I_p = 1.5, R_p = 1.5, Ω_o = 1.5, z/h = 0)

   HORIZONTAL FORCE (E_h) = 0.99 W_p
   HORIZONTAL FORCE (E_{mh}) = 1.49 W_p (FOR CONCRETE ANCHORAGE)
   VERTICAL FORCE (E_v) = 0.44 W_p

2. CENTER OF GRAVITY (C.G.) AND WEIGHT ARE THE GOVERNING PARAMETERS FOR DESIGN. THIS PREAPPROVAL ENCOMPASSES ALL WEIGHTS UP TO THE MAXIMUM WEIGHT SHOWN.
3. STRUCTURAL ENGINEER OF RECORD FOR THE BUILDING SHALL PROVIDE SUPPORT STRUCTURE DESIGNED TO SUPPORT WEIGHTS AND FORCES SHOWN IN COMBINATION WITH ALL OTHER LOADS THAT MAY BE PRESENT.
4. SEE GENERAL NOTES: SHEET 1.

REGISTERED PROFESSIONAL ENGINEER
JONATHAN ROBERSON
No. 4197
EXP. 6-30-2016
3/7/16
STRUCTURAL
STATE OF CALIFORNIA

NOT STRUCTURAL ENGINEER OF RECORD

SAMSUNG

GC80 & GC85A PATIENT TABLE

DES.	J. ROBERSON
JOB NO.	11-1529
DATE	3/7/16

SHEET 4 OF 7 SHEETS

SEISMIC SUPPORTS & ATTACHMENTS

CONCRETE SLAB

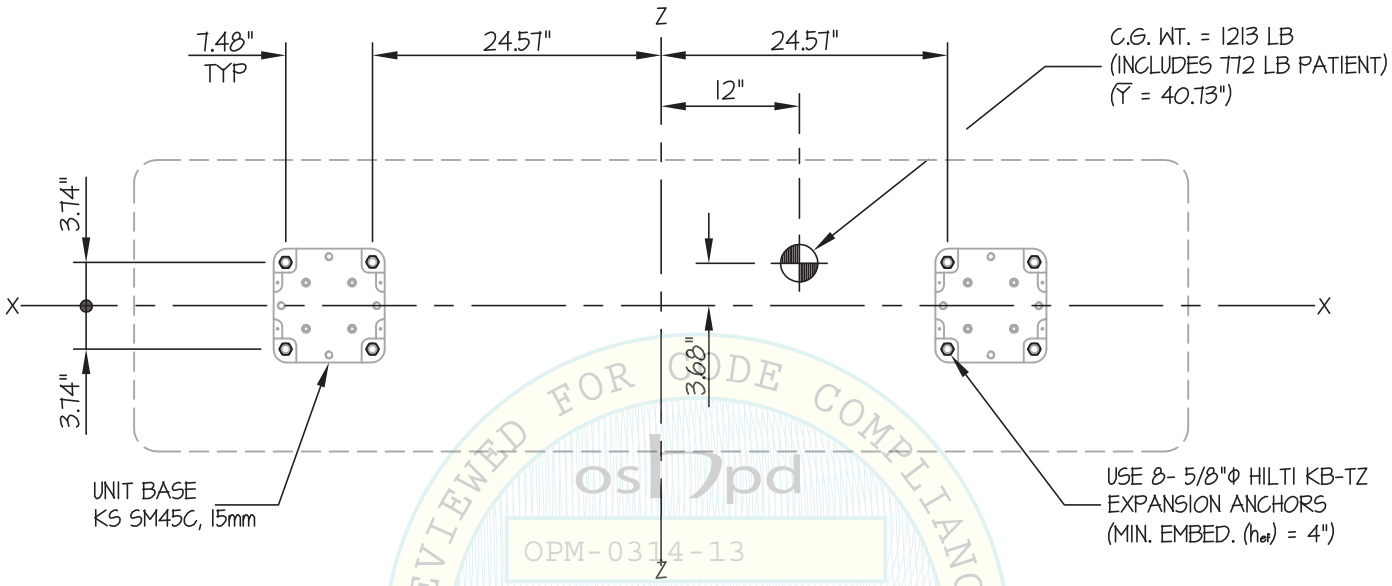

PLAN AT BASE

REVIEWED FOR CODE COMPLIANCE
CALIFORNIA BUILDING CODE, 2013
OSHPD
OPM-0314-13
DATE: 04/13/2016

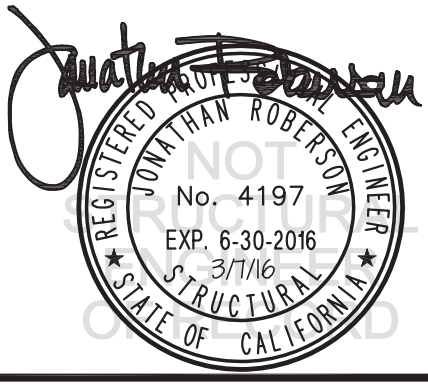

NOT STRUCTURAL ENGINEER OF RECORD

SAMSUNG

GC80 & GC85A PATIENT TABLE

DES. J. ROBERSON
JOB NO. 11-1529
DATE 3/7/16
SHEET 5 OF 7 SHEETS

SEISMIC SUPPORTS & ATTACHMENTS

CONCRETE SLAB ON METAL DECK

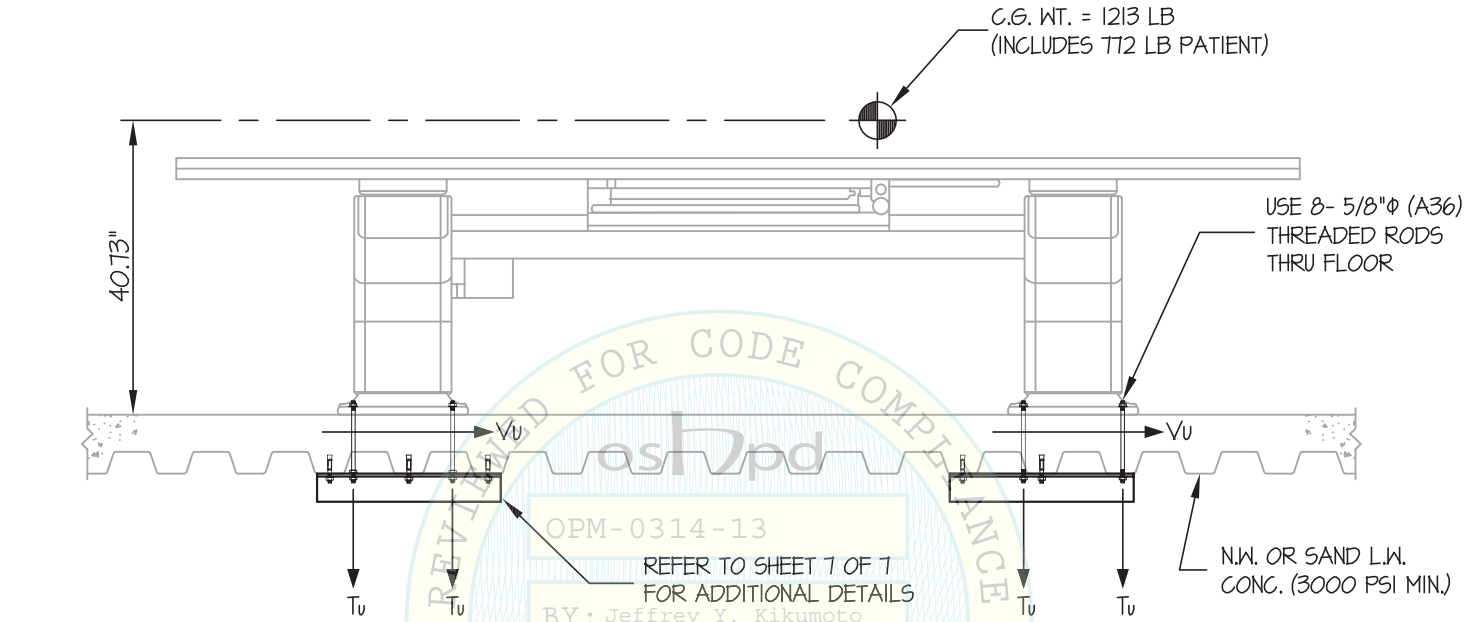

Tu = 4556 LB/BOLT (MAX)
Vu = 595 LB/BOLT (MAX)
(VALUES DO NOT INCLUDE Ω_o)

FRONT ELEVATION

REVIEWED FOR CODE COMPLIANCE
OSHPD
OPM-0314-13
BY: Jeffrey Y. Kikumoto
DATE: 04/13/2016
CALIFORNIA BUILDING CODE, 2013

NOTES:

1. **FORCES ARE DETERMINED PER 2013 CALIFORNIA BUILDING CODE AND ASCE 7-10.**
   STRENGTH DESIGN IS USED. (S_{DS} = 2.20, a_p = 1.0, I_p = 1.5, R_p = 1.5, Ω_o = 1.5, z/h ≤ 1)

   HORIZONTAL FORCE (E_h) = 2.64 W_p
   HORIZONTAL FORCE (E_{mh}) = 3.96 W_p (FOR CONCRETE ANCHORAGE)
   VERTICAL FORCE (E_v) = 0.44 W_p

2. CENTER OF GRAVITY (C.G.) AND WEIGHT ARE THE GOVERNING PARAMETERS FOR DESIGN. THIS PREAPPROVAL ENCOMPASSES ALL WEIGHTS UP TO THE MAXIMUM WEIGHT SHOWN.
3. STRUCTURAL ENGINEER OF RECORD FOR THE BUILDING SHALL PROVIDE SUPPORT STRUCTURE DESIGNED TO SUPPORT WEIGHTS AND FORCES SHOWN IN COMBINATION WITH ALL OTHER LOADS THAT MAY BE PRESENT.
4. SEE GENERAL NOTES: SHEET 1.

REGISTERED PROFESSIONAL ENGINEER
JONATHAN ROBERSON
No. 4197
EXP. 6-30-2016
3/7/16
STRUCTURAL
STATE OF CALIFORNIA

NOT STRUCTURAL ENGINEER OF RECORD

SAMSUNG

GC80 & GC85A PATIENT TABLE

DES.	J. ROBERSON
JOB NO.	11-1529
DATE	3/7/16

SHEET 6 OF 7 SHEETS

SEISMIC SUPPORTS & ATTACHMENTS

CONCRETE SLAB ON METAL DECK

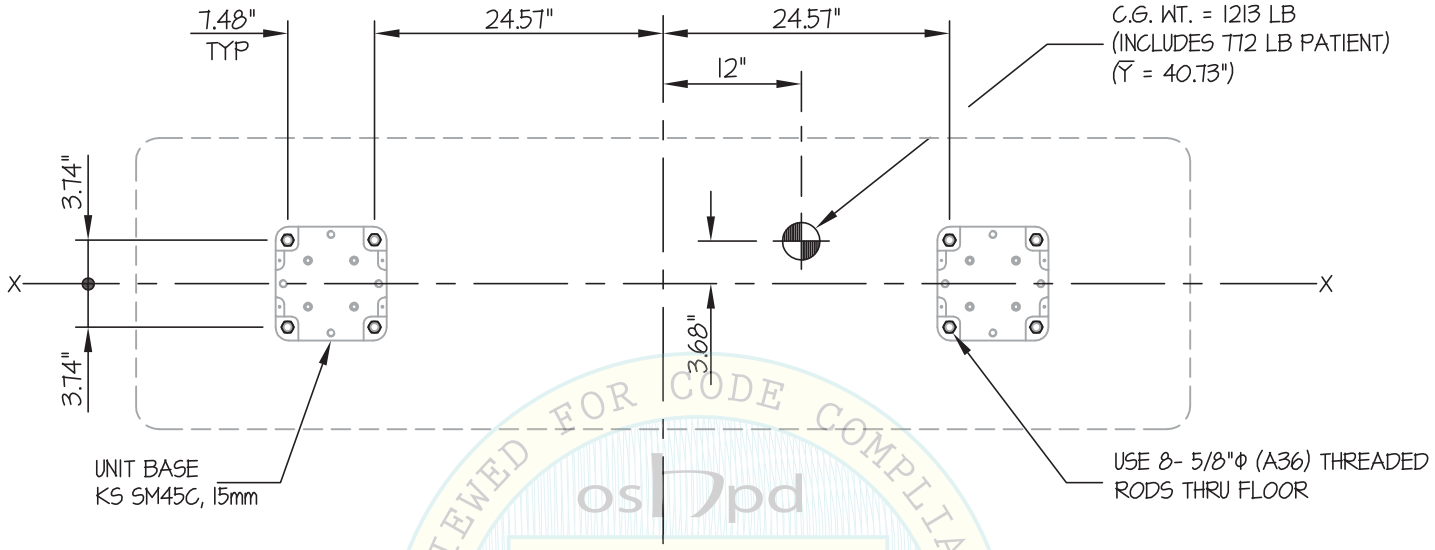

PLAN AT BASE

REVIEWED FOR CODE COMPLIANCE
CALIFORNIA BUILDING CODE, 2013
OSHPD
OPM-0314-13
BY: Jeffrey Y. Kikumoto
DATE: 04/13/2016

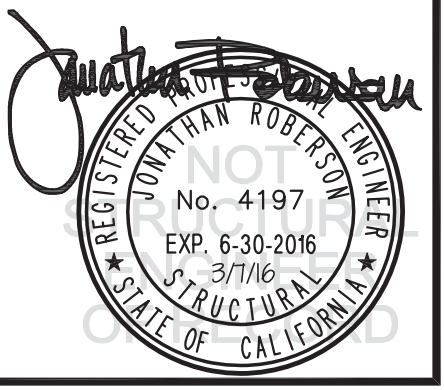

NOT STRUCTURAL ENGINEER OF RECORD

SAMSUNG

GC80 & GC85A PATIENT TABLE

DES. J. ROBERSON
JOB NO. 11-1529
DATE 3/7/16
SHEET 7 OF 7 SHEETS

SEISMIC SUPPORTS & ATTACHMENTS

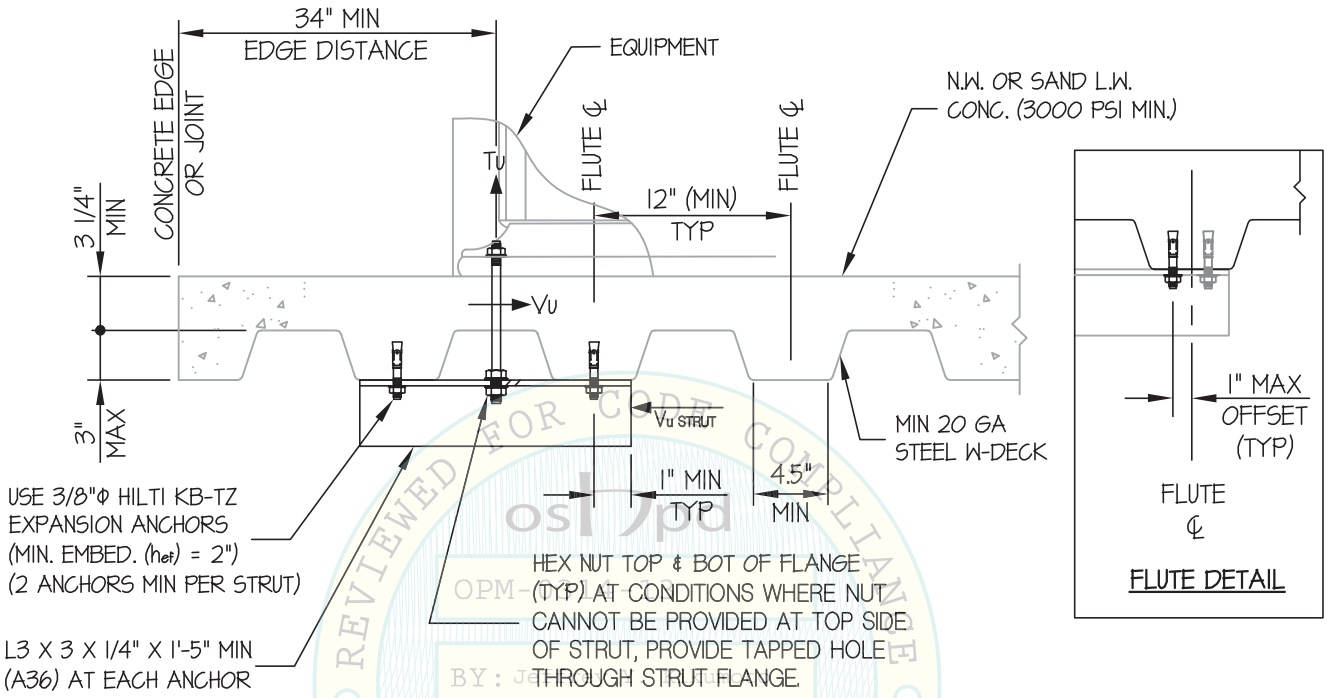

MIN STEEL DECK REQUIREMENTS AND STRUT DETAIL

CONCRETE DETAIL

REVIEWED FOR CODE COMPLIANCE
CALIFORNIA BUILDING CODE, 2013
OPM-0312-13
BY: JEFFREY KIKUMOTO
DATE: 04/13/2016

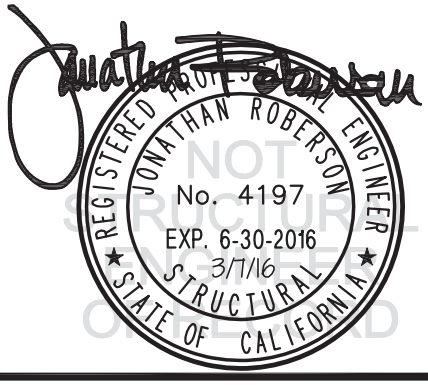

NOT STRUCTURAL ENGINEERED