Facilities Development Division www.oshpd.ca.gov/fdd
400 R Street. Suite 200, Sacramento, California 95811-6213 Phone (916) 440-8300 Fax (916) 654-2973

APPLICATION FOR PREAPPROVAL

SPECIAL SEISMIC CERTIFICATION OF EQUIPMENT AND COMPONENTS

For Office Use Only

APPLICATION NO.

OSP – 0118 – 10

Check whether application is: NEW [X] RENEWAL [ ]

1.0

Alliance Air Products, LLC
Manufacturer

Thomas R. Sieber
Manufacturer's Technical Representative

1392 East Palomar St. #403-222 Chula Vista, CA 91913
Mailing Address

619.428.9688
Telephone

tsieber@allianceairproducts.com
E-mail Address

2.0

Custom Air Handling Units
Product Name

Air Handling Unit
Product Type

Various (See Attachment)
Product model No (List all unique product identification numbers and/or serial numbers)

General Description:
Rigid mounted air handling unit cabinets without external vibration isolators with internal & external components as outlined in Attachment A. Modifications made to test units before/during test and modifications made to address anomalies observed during test shall be incorporated into the production units.

3.0

Tobolski Watkins Engineering, Inc.
Applicant Company Name

Matthew J. Tobolski, Ph.D., S.E.
Contact Person

9246 Lightwave Avenue, San Diego, CA 92123
Mailing Address

858.381.5843
Telephone

mtobolski@tobolskiwatkins.com
E-mail Address

I hereby agree to reimburse the Office of Statewide Health Planning and Development for the actual costs incurred by the department for review.

Signature of Applicant

03/14/12
Date

President & CEO
Title

Tobolski Watkins Engineering, Inc.
Company Name

4.0 ***Registered Design Professional Preparing the Report***

Tobolski Watkins Engineering Inc.
Company Name

Daniel A. Junker, P.E. — *Contact Name*
C 78406 — *California License Number*

9246 Lightwave Avenue, San Diego, CA 92123
Mailing Address

858.381.5843 — *Telephone*
djunker@tobolskiwatkins.com — *E-mail Address*

5.0 ***California Licensed Structural Engineer Review and Acceptance of the Report***

Tobolski Watkins Engineering Inc.
Company Name

Matthew J Tobolski, Ph.D., S.E. — *Contact Name*
S 5648 — *California License Number*

9246 Lightwave Avenue, San Diego, CA 92123
Mailing Address

858.381.5843 — *Telephone*
mtobolski@tobolskiwatkins.com — *E-mail Address*

6.0 ***Anchorage Pre-Approval***

☐ *Anchorage is pre-approved under OPA-*
(Separate application for anchorage pre-approval is required)

☒ Anchorage is not Pre-approved

7.0 ***Certification Method***

☐ *Testing in accordance with:* ☒ *ICC-ES AC-156* ☐ *Other (Please Specify):*

☐ *Analysis*
☐ *Experience data*
☐ *Combination of Testing, Analysis, and/or Experience Data (Please Specify):*

8.0 ***Testing Laboratory (if applicable)***

Clark Dynamic Testing Laboratory — *Company Name*
J.R. Antenucci — *Contact Name*

1801 Route 51, Jefferson Hills, PA 15025
Mailing Address

412.387.1004 — *Telephone*
jrantenucci@clarktesting.com — E-mail:

9.0 *Approval Parameters*

Design in accordance with ASCE 7-05 Chapter 13: ☒ Yes ☐ No

Design Basis of Equipment or Components (F_p/W_p) = ***1.87***

S_{DS} (Spectral response acceleration at short period) = ***2.5g***

a_p (In-structure equipment or component amplification factor) = ***2.5***

R_p (Equipment or component response modification factor) = ***6.0***

I_p (Importance factor) = ***1.5***

z/h (Height factor ratio)= ***1.0***

Equipment or Component fundamental period(s) = ***[See Attachment]***

Building period limits (if any) = ***None***

Overall dimensions and weight (or range thereof) = ***[See Attachment]***

Equipment or Components @ grade designed in accordance with ASCE 7-05 Chapter 15: ☐ Yes ☒ No

Design Basis of Equipment or Components (V/W) =

S_{DS} (Spectral response acceleration at short period) =

S_1 (Spectral response acceleration at 1 second period) =

R (Response modification coefficient)=1.0

Ω_0 (System overstrength factor) =1.0

C_d (Deflection amplification factor) =1.0

I_p (Importance factor) =1.5

Height to Center of Gravity above base =

Equipment or Component fundamental period(s) = Sec

Overall dimensions and weight (or range thereof) =

Tank(s) designed in accordance with ASME BPVC, 2007: ☐ Yes ☒ No

10.0 *List of attachments supporting the special seismic certification of equipment or components:*

☒ *Test Report* ☐ *Drawings* ☐ *Manufacturer's Catalog*

☐ *Calculations* ☒ *Others (Please Specify:):* ***Attachment A***

11.0 *OSHPD Approval* *(For Office Use Only)*

August 15, 2012

Signature & Date

Timothy J. Piland, SSE

Name & Title

Condition of Approval (if any):

December 31, 2016

Approval Expiration Date

S_{DS} (g) = **2.5** z/h = **1.0**

Special Seismic Certification Valid Up to

Special Seismic Certification
UUT Summary Sheet

TWEI Project No.:2010-0292-CO-001

Manufacturer: Alliance Air Products, LLC

Model Line: Custom Air Handling Units

UUT	Unit Description	Report Number	Location	S_{DS}	z/h	I_p
1A	Small Cabinet Section 1 *(Inlet & Outlet Walls Removed)**	EL:10059	Clark	2.5	1.0	1.5
1B	Small Cabinet Section 2 *(Inlet & Outlet Walls Removed)**	EL:10059	Clark	2.5	1.0	1.5
2	Medium Cabinet Section 1 *(Inlet & Outlet Walls Removed)**	EL:10059	Clark	2.5	1.0	1.5
3	Medium Cabinet Section 2 *(Outlet Wall Removed)**	EL:10058	Clark	2.5	1.0	1.5
4A	Large Cabinet Section 1 *(Inlet Wall Removed)**	EL:10058	Clark	2.5	1.0	1.5
4B	Large Cabinet Section 2 *(Inlet & Outlet Walls Removed)**	EL:10058	Clark	2.5	1.0	1.5
5	Large Cabinet Section 3 *(Inlet & Outlet Walls Removed)**	EL:10053	Clark	2.5	1.0	1.5
6	Large Cabinet Section 4 *(Inlet & Outlet Walls Removed)**	EL:10060	Clark	2.5	1.0	1.5
7	Large Cabinet Section 5A *(Inlet & Outlet Walls Removed)**	EL:10060	Clark	2.5	1.0	1.5
8	Large Cabinet Section 5B *(Inlet & Outlet Walls Removed)**	EL:10053	Clark	2.5	1.0	1.5
9						
10						
11						
12						
13						
14						
15						
16						
17						
18						
19						
20						
21						
22						
23						
24						
25						

** Note: Wall removal certifies units for use in configurations shown in the attached drawings*

© 2010 Tobolski Watkins Engineering, Inc.

Form: 2010-QAP-EF-006, revision 0

UUT – 1A,1B

UNIT UNDER TEST (UUT)
Summary Sheet

TWEI Project No.: 2010-0292-CO-001

Manufacturer: Alliance Air Products, LLC

Model Line: Custom Air Handling Units

Model Number: Test Prototype - Small Cabinet Sections 1 & 2

Product Construction Summary:
2" deep 16ga SS Wall Panels. 20ga SS, 20ga perforated SS, 20ga GS, 20ga perforated GS, 0.02" AL wall liners. 6" deep stainless steel base channels. 16ga SS floor lining. SS door. 3lb fiberglass insulation.

Subcomponent Summary:
Model 122 Direct Drive Aluminum Fan w/ 5 HP Baldor Motor, Steel Frame. Model 122 Belt Drive AL Fan w/ 5 HP Baldor Motor, Steel Frame. Model 182 Single Fan Aluminum Stacked Fan w/ 5 HP TECO/Westinghouse Motor, Steel Frame. 12"x12" Door. 18"x36" Door. 36" Deep Sound Trap. SS 22"x12" Damper. SS 22"x15" Louver. SS 4x1.5 Cell Filter Frame w/ Pre-filters. SS 250,000 BTU Furnace. 1.0 HP NEMA 3 VFD. 5 HP Starter Panel.

UUT Properties

Weight (lb)	Dimensions (in)			Lowest Natural Frequency (Hz)		
	Depth	Width	Height	Front-Back	Side-Side	Vertical
7,845	81.0(A), 76.0(B)	104.0	110.0	3.0	3.3	2.8

UUT Highest Passed Seismic Run Information

Building Code	Test Criteria	S_{DS}	z/h	I_p	A_{FLX-H}	A_{RIG-H}	A_{FLX-V}	A_{RIG-V}
CBC 2010	ICC-ES AC 156	2.5	1.0	1.5	4.0	3.0	1.67	0.67

Test Mounting Details:

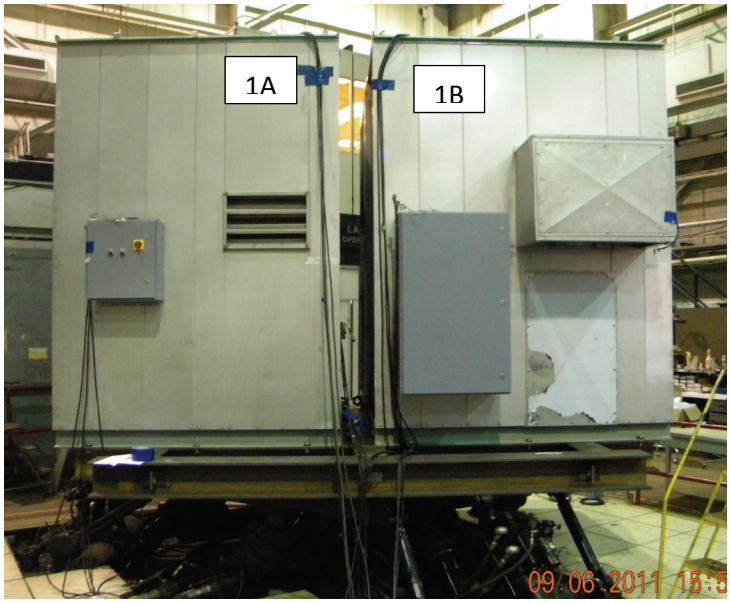

Unit mounted to test fixture using twelve (12) Grade 5 5/8" diameter hex head bolts.

© 2010 Tobolski Watkins Engineering, Inc.

Form: 2010-QAP-EF-004, revision 0

UUT – 2

UNIT UNDER TEST (UUT)
Summary Sheet

TWEI Project No.: 2010-0292-CO-001

Manufacturer:	Alliance Air Products, LLC
Model Line:	Custom Air Handling Units
Model Number:	Test Prototype - Medium Cabinet Section 1

Product Construction Summary:
2" deep 0.063" thick AL wall panels. No Liner, 0.02" AL liner, 0.02" perforated AL Liner. 6" deep AL channel base framing. 0.06" AL floor lining. 1.5lb fiberglass insulation. Injected foam insulation. AL Door. Coils mounted in coil rack.

Subcomponent Summary:
Model 182 Nine (9) Aluminum Fan Stacked Fan w/ 15 HP TECO/Westinghouse Motor, Steel Frame. 10 Row HW/CW-24Wx24H Copper Coil, 10 fpi, 0.035" tube wall thickness. 10 Row HW/CW-24Wx24H Aluminum Coil, 10 fpi, 0.035" tube wall thickness. 14ga SS, GS drain pain. 14ga SS, GS coil casings. (1) 18" UV Light. GS 4.5x2 Cell Filter Frame w/ Final Filters. SS 21"x15"Humidifier. 24Wx60H Door. 18Wx60H Door.

UUT Properties

Weight (lb)	Dimensions (in)			Lowest Natural Frequency (Hz)		
	Depth	Width	Height	Front-Back	Side-Side	Vertical
5,635	96.0	104.0	142.0	7.5	7.5	12.6

UUT Highest Passed Seismic Run Information

Building Code	Test Criteria	S_{DS}	z/h	I_p	A_{FLX-H}	A_{RIG-H}	A_{FLX-V}	A_{RIG-V}
CBC 2010	ICC-ES AC 156	2.5	1.0	1.5	4.0	3.0	1.67	0.67

Test Mounting Details:

Unit mounted to test fixture using six (6) Grade 5 5/8" diameter hex head bolts.

© 2010 Tobolski Watkins Engineering, Inc.

Form: 2010-QAP-EF-004, revision 0

UUT – 3

UNIT UNDER TEST (UUT)
Summary Sheet

TWEI Project No.: 2010-0292-CO-001

Manufacturer:	Alliance Air Products, LLC
Model Line:	Custom Air Handling Units
Model Number:	Test Prototype - Medium Cabinet Section 2

Product Construction Summary:
2" deep 0.063" thick AL wall panels. 0.125" AL treadplate floor lining. No Liner, 20ga perforated GS, 20ga GS wall liners. 6" deep AL channel base framing. 1.5lb fiberglass insulation. Injected foam insulation. AL Door.

Subcomponent Summary:
18"x42" Door. 36"x72" Door. (2) 48"x48" Sound Trap. AL 48"x108" Damper. AL 50"x115" Louver. SS 250,000 BTU Furnace. SS 400,000 BTU Furnace.

UUT Properties

Weight (lb)	Dimensions (in)			Lowest Natural Frequency (Hz)		
	Depth	Width	Height	Front-Back	Side-Side	Vertical
4,270	134.0	104.0	142.0	4.6	15.9	13.5

UUT Highest Passed Seismic Run Information

Building Code	Test Criteria	S_{DS}	z/h	I_p	A_{FLX-H}	A_{RIG-H}	A_{FLX-V}	A_{RIG-V}
CBC 2010	ICC-ES AC 156	2.5	1.0	1.5	4.0	3.0	1.67	0.67

Test Mounting Details:

Unit mounted to test fixture using six (6) Grade 5 5/8" diameter hex head bolts.

© 2010 Tobolski Watkins Engineering, Inc.

Form: 2010-QAP-EF-004, revision 0

UUT – 4A,4B

UNIT UNDER TEST (UUT)
Summary Sheet

TWEI Project No.: 2010-0292-CO-001

Manufacturer: Alliance Air Products, LLC

Model Line: Custom Air Handling Units

Model Number: Test Prototype – Large Cabinet Sections 1 & 2

Product Construction Summary:

2" deep 14ga GS wall panels. 20ga GS, 20ga perforated GS wall liners. 16ga GS floor lining. 10" deep steel channel base framing. 1.5lb fiberglass insulation. GS door.

Subcomponent Summary:

GS Flat HEPA Filter Frame. 5H x 5W, 24x24x2 30% PF. 5H x 1W, 24x12x2 30% PF. 5H x 5W, 24x24x12 95% FF. 5H x 1W, 24x12x12 95% FF. 18"x60" Door. (2) 40W x 48H nearwall opening, 1 GS Damper, 1 GS Louver. (2) 40W x 48H farwall opening1 GS Damper, 1 GS Louver.

UUT Properties

Weight (lb)	Dimensions (in)			Lowest Natural Frequency (Hz)		
	Depth	Width	Height	Front-Back	Side-Side	Vertical
5,270	117.0	146.0	144.0	7.0	11.9	>33.0

UUT Highest Passed Seismic Run Information

Building Code	Test Criteria	S_{DS}	z/h	I_p	A_{FLX-H}	A_{RIG-H}	A_{FLX-V}	A_{RIG-V}
CBC 2010	ICC-ES AC 156	2.5	1.0	1.5	4.0	3.0	1.67	0.67

Test Mounting Details:

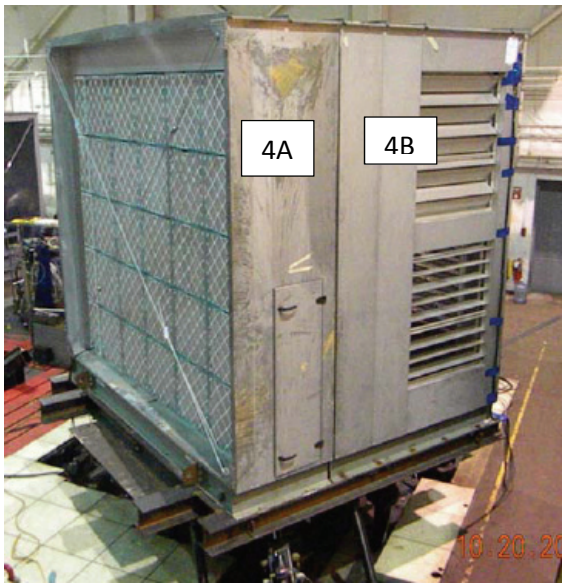

Unit mounted to test fixture using four (4) Grade 5 5/8" diameter hex head bolts.

© 2010 Tobolski Watkins Engineering, Inc.

Form: 2010-QAP-EF-004, revision 0

UUT – 5

UNIT UNDER TEST (UUT)
Summary Sheet

TWEI Project No.: 2010-0292-CO-001

Manufacturer: Alliance Air Products, LLC

Model Line: Custom Air Handling Units

Model Number: Test Prototype – Large Cabinet Section 3

Product Construction Summary:
2" deep 14ga GS wall panels. 20ga GS, 22ga GS wall liners, .125" steel treadplate floor lining. 10" deep carbon steel channel base framing. GS Door. 1.5 lb fiberglass insulation. Coils mounted in coil rack.

Subcomponent Summary:
4 Row HW/CW-130Wx60H Copper Coil, 8 fpi, 0.02" tube wall thickness. 8 Row HW/CW-130Wx60H Aluminum Coil, 8 fpi, 0.02" tube wall thickness. 16ga GS, SS drain pan. 16ga SS, GS casing. 18"x60" Door. 24"x60" Door. (5) 48" UV Lights. SS 125"x130" Humidifier.

UUT Properties

Weight (lb)	Dimensions (in)			Lowest Natural Frequency (Hz)		
	Depth	Width	Height	Front-Back	Side-Side	Vertical
6,850	95.0	146.0	146.0	17.4	5.9	18.2

UUT Highest Passed Seismic Run Information

Building Code	Test Criteria	S_{DS}	z/h	I_p	A_{FLX-H}	A_{RIG-H}	A_{FLX-V}	A_{RIG-V}
CBC 2010	ICC-ES AC 156	2.5	1.0	1.5	4.0	3.0	1.67	0.67

Test Mounting Details:

Unit mounted to test fixture using six (6) Grade 5 5/8" diameter hex head bolts.

© 2010 Tobolski Watkins Engineering, Inc.

Form: 2010-QAP-EF-004, revision 0

UUT – 6

UNIT UNDER TEST (UUT)
Summary Sheet

TWEI Project No.: 2010-0292-CO-001

Manufacturer: Alliance Air Products, LLC

Model Line: Custom Air Handling Units

Model Number: Test Prototype – Large Cabinet Section 4

Product Construction Summary:
2" deep 16ga GS wall panels. 22ga GS, 22ga perforated GS wall liners. 16ga GS floor lining. 10" deep carbon steel channel base framing. GS Door. 1.5 lb fiberglass insulation.

Subcomponent Summary:
(2) Model 402 Direct Drive Aluminum Fans w/ 50 HP TECO/Westinghouse Motors, Steel Frame.
24"x60" Door. 100 HP Starter Panel.

UUT Properties

Weight (lb)	Dimensions (in)			Lowest Natural Frequency (Hz)		
	Depth	Width	Height	Front-Back	Side-Side	Vertical
6,900	107.0	146.0	146.0	3.4	3.1	3.0

UUT Highest Passed Seismic Run Information

Building Code	Test Criteria	S_{DS}	z/h	I_p	A_{FLX-H}	A_{RIG-H}	A_{FLX-V}	A_{RIG-V}
CBC 2010	ICC-ES AC 156	2.5	1.0	1.5	4.0	3.0	1.67	0.67

Test Mounting Details:

Unit mounted to test fixture using six (6) Grade 5 5/8" diameter hex head bolts.

© 2010 Tobolski Watkins Engineering, Inc.

Form: 2010-QAP-EF-004, revision 0

UUT – 7

UNIT UNDER TEST (UUT)
Summary Sheet

TWEI Project No.: 2010-0292-CO-001

Manufacturer: Alliance Air Products, LLC

Model Line: Custom Air Handling Units

Model Number: Test Prototype – Large Cabinet Section 5A

Product Construction Summary:
2" deep 16ga GS wall panels. 20ga GS wall liners. 14ga GS floor lining. 10" deep carbon steel channel base framing. GS Door. 1.5 lb fiberglass insulation.

Subcomponent Summary:
SS 2,250,000 BTU Furnace. 24"x60" Door. 74" Vestibule.

UUT Properties

Weight (lb)	Dimensions (in)			Lowest Natural Frequency (Hz)		
	Depth	Width	Height	Front-Back	Side-Side	Vertical
6,170	111.6	146.0	144.0	3.6	10.6	9.5

UUT Highest Passed Seismic Run Information

Building Code	Test Criteria	S_{DS}	z/h	I_p	A_{FLX-H}	A_{RIG-H}	A_{FLX-V}	A_{RIG-V}
CBC 2010	ICC-ES AC 156	2.5	1.0	1.5	4.0	3.0	1.67	0.67

Test Mounting Details:

Unit mounted to test fixture using six (6) Grade 5 5/8" diameter hex head bolts.

© 2010 Tobolski Watkins Engineering, Inc.

Form: 2010-QAP-EF-004, revision 0

UUT – 8

UNIT UNDER TEST (UUT)
Summary Sheet

TWEI Project No.: 2010-0292-CO-001

Manufacturer: Alliance Air Products, LLC

Model Line: Custom Air Handling Units

Model Number: Test Prototype – Large Cabinet Section 5B

Product Construction Summary:
2" deep 16 ga GS wall panels. 20 ga GS wall liners. 16 ga GS floor lining. 10" deep carbon steel channel base framing. GS door. 3 lb fiberglass insulation.

Subcomponent Summary:
Model 600 direct drive aluminum fan w/ 75 HP Baldor motor, steel frame. 100 HP VFD.

UUT Properties

Weight (lb)	Dimensions (in)			Lowest Natural Frequency (Hz)		
	Depth	Width	Height	Front-Back	Side-Side	Vertical
8,125	120.4	146.0	144.0	2.7	2.4	3.1

UUT Highest Passed Seismic Run Information

Building Code	Test Criteria	S_{DS}	z/h	I_p	A_{FLX-H}	A_{RIG-H}	A_{FLX-V}	A_{RIG-V}
CBC 2010	ICC-ES AC 156	2.5	1.0	1.5	4.0	3.0	1.67	0.67

Test Mounting Details:

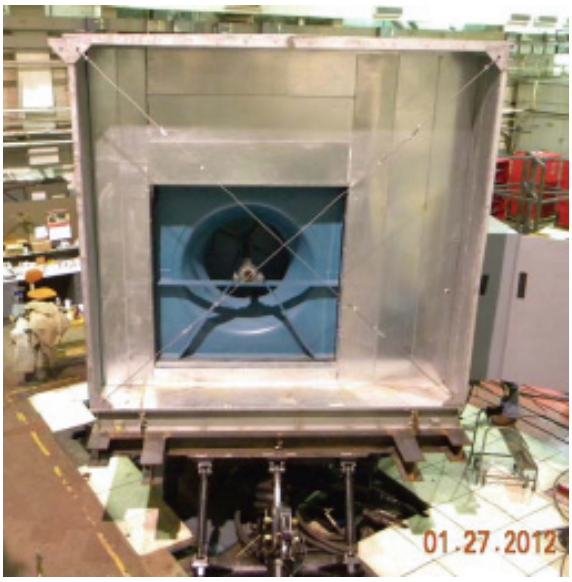

Unit mounted to test fixture using six (6) Grade 5 5/8" diameter hex head bolts.

© 2010 Tobolski Watkins Engineering, Inc.

Form: 2010-QAP-EF-004, revision 0

Table 1

Special Seismic Certification Certified Product Matrix

TWEI Project No.: 2010-0075-CO-001

Manufacturer: Alliance Air Products, LLC

Model Line: Custom Air Handling Units

Certified Product Construction Summary:
Units shall be constructed in accordance with Alliance Air Products typical seismic details. 2”-4” deep 16ga-12ga Insulated panels constructed of SS, GS, or AL. 22ga to 18ga solid or perforated wall liners (SS,GS,AL). 16ga to 10ga floor panels (SS,CS,AL, w/ optional treadplate). 1.5-6.0 lb fiberglass or urethane foam insulation. 4” to 10” deep base framing perimeter channel.
***** Cable cross-bracing required on all approved sections, detailed and spaced per the attached drawings.***

Certified Options Summary:
Indoor or outdoor (NEMA 1 or NEMA 3R). Optional vestibule.
Units within dimensions listed below certified for interior section, end section, or enclosed section.

Certified Mounting Summary:
Non-Isolated Floor Mount. SEOR to design anchorage.

Building Code: CBC 2010 | ***Seismic Certification Limits:*** S_{DS} = 2.5g | ***z/h*** = 1.0 | I_p = 1.5

Model Line	Model	Dimension (in)			Weight (lb)	Notes	UUT
		Depth	Width	Height			
Custom Air Handling Units	Enclosure Sections	96.0	96.0	96.0	100 psf Max Loading		
		…					
		81.0,76.0	104.0	110.0		*(SS Tested)*	1A, 1B
		96.0	104.0	142.0		*(AL Tested)*	2
		134.0	104.0	142.0		*(AL Tested)*	3
		117.0	146.0	144.0		*(GS Tested)*	4A, 4B
		95.0	146.0	146.0		*(GS Tested)*	5
		107.0	146.0	146.0		*(GS Tested)*	6
		111.6	146.0	144.0		*(GS Tested)*	7
		120.4	146.0	144.0		*(GS Tested)*	8
		…					
		134.0*	146.0	146.0			

* Maximum individual Module Depth

* With or without splits. With or without vestibule. See representative unit drawings for more information on dimensional restrictions.

© 2010 Tobolski Watkins Engineering, Inc.

Form: 2010-QAP-EF-005, revision 0

Table 2

Special Seismic Certification Certified Product Matrix

TWEI Project No.: 2010-0292-CO-001

Manufacturer: Alliance Air Products, LLC

Model Line: Custom Air Handling Units | ***FAN DETAIL***

Certified Product Construction Summary:
Aluminum Wheel and Carbon Steel Frame (All models).
Note: Fan base construction on all models must be identical to that which successfully passed seismic testing. All changes made to address anomalies during testing must be implemented into certified units (must use 3/8" snubber plates).

Certified Options Summary:
Direct Drive. Motors per Table 5.

Certified Mounting Summary:
Mounted in Equipment.

Building Code: CBC 2010 | ***Seismic Certification Limits:*** S_{DS} =2.5g | ***z/h*** = 1.0 | I_p = 1.5

Supplier	Model	Dimension (in)			Weight (lb)	Notes	UUT
		Depth	Width	Height			
Twin City EPF/EPQ	122	22.4	20.0	20.0	241	*Please refer to Certified Product Construction Summary for material of tested samples.*	1A
	150	23.6	22.0	22.5	250		
	165	24.8	24.0	25.5	262		
	182	30.9	26.0	26.0	375		
	200	32.3	29.0	28.5	388		
	222	36.1	32.0	31.5	574		
	245	37.8	34.0	34.0	592		
	270	41.1	38.0	37.5	714		
	300	43.3	42.0	41.5	755		
	330	46.9	46.0	46.0	1164		
	365	51.3	51.0	50.5	1531		
	402	54.9	56.0	56.0	1751		6,6

Form: 2010-QAP-EF-005, revision 0

© 2010 Tobolski Watkins Engineering, Inc.

Table 3

Special Seismic Certification Certified Product Matrix

TWEI Project No.: 2010-0292-CO-001

Manufacturer: Alliance Air Products, LLC

Model Line: Custom Air Handling Units | ***FAN DETAIL***

Certified Product Construction Summary:
Aluminum Wheel and Carbon Steel Frame (All models).
Note: Fan base construction on all models must be identical to that which successfully passed seismic testing. All changes made to address anomalies during testing must be implemented into certified units (must use 3/8" snubber plates).

Certified Options Summary:
Belt Drive. Motors per Table 5.

Certified Mounting Summary:
Mounted in Equipment.

Building Code: CBC 2010 | ***Seismic Certification Limits:*** S_{DS} =2.5g | ***z/h*** = 1.0 | I_p = 1.5

Supplier	Model	Dimension (in)			Weight (lb)	Notes	UUT
		Depth	Width	Height			
Twin City EPF/EPQ	122	13.8	34.8	20.0	237	*Please refer to Certified Product Construction Summary for material of tested samples..*	1A
	150	15.8	39.0	22.5	254		
	165	17.0	41.0	25.5	269		
	182	19.0	45.8	26.0	312		
	200	21.4	48.8	28.5	334		
	222	23.0	51.8	31.5	431		
	245	25.1	56.8	34.0	502		
	270	27.1	63.8	37.5	541		
	300	30.5	67.8	41.5	593		
	330	33.8	71.8	46.0	649		
	365	36.6	76.8	50.5	797		
	402	39.5	85.5	56.0	954		
	445	43.6	99.8	62.0	1120		
	490	47.1	104.8	68.0	1405		
	542	51.1	115.3	75.5	1599		
	600	57.6	115.3	76.0	1944		8

© 2010 Tobolski Watkins Engineering, Inc.

Table 4

Special Seismic Certification Certified Product Matrix

TWEI Project No.: 2010-0292-CO-001

Manufacturer: Alliance Air Products, LLC

Model Line: Custom Air Handling Units | ***FAN DETAIL***

Certified Product Construction Summary:
Aluminum Wheel and Carbon Steel Frame (All models).
Note: Fan base construction on all models must be identical to that which successfully passed seismic testing. All changes made to address anomalies during testing must be implemented into certified units (must use 3/8" snubber plates).

Certified Options Summary:
Stacked Fan Construction. Motors per Table 5.

Certified Mounting Summary:
Mounted in Equipment.

Building Code: CBC 2010 | ***Seismic Certification Limits:*** S_{DS} =2.5g | ***z/h*** = 1.0 | I_p = 1.5

Supplier	Model	Dimension (in)			Weight (lb)	Notes	UUT
		Depth	Width	Height			
Twin City AAP	182	31.1	32.0	32.0	496	*Please refer to Certified Product Construction Summary for material of tested samples.*	1A
	182	31.1	32.0	64.0	992		
	182	31.1	32.0	96.0	1488		
	182	31.1	64.0	64.0	1984		
	182	31.1	64.0	96.0	2480		
	182	31.1	64.0	128.0	2976		
	182	31.1	96.0	96.0	3472		2

Form: 2010-QAP-EF-005, revision 0

© 2010 Tobolski Watkins Engineering, Inc.

Table 5

Special Seismic Certification Certified Product Matrix

TWEI Project No.: 2010-0292-CO-001

Manufacturer: Alliance Air Products, LLC

Model Line: Custom Air Handling Units

FAN MOTOR DETAIL

Certified Product Construction Summary:
Component construction specific to model number listed below.

Certified Options Summary:
208/230,460V.

Certified Mounting Summary:
Mounted in Equipment.

Building Code: CBC 2010 | ***Seismic Certification Limits:*** S_{DS} =2.5g | ***z/h*** = 1.0 | I_p = 1.5

Supplier	Model	Dimension (in)			Weight (lb)	Notes	UUT
		Depth	Width	Height			
Baldor	5 HP				114		1A,1A
	…						
	75 HP				913		8
TECO/Westinghouse	5 HP				114		1A
	…						
	15 HP				350		2
	…						
	50 HP				845		6,6

© 2010 Tobolski Watkins Engineering, Inc.

Form: 2010-QAP-EF-005, revision 0

Table 6

Special Seismic Certification Certified Product Matrix

TWEI Project No.: 2010-0292-CO-001

Manufacturer: Alliance Air Products, LLC

Model Line: Custom Air Handling Units | ***COIL DETAIL***

Certified Product Construction Summary:
Galvanized or Stainless Steel Casing and Drain Pan; Aluminum or Copper Fins; Tube Wall Thickness: 0.016-0.049; Fin Thickness: 0.006-0.010; Fins per Inch: 4-14; 1-10 Rows; 0.02-0.035" tube thickness.
Note: Coil construction on all models must be identical to that which successfully passed seismic testing. All changes made to address anomalies during testing must be implemented into certified units (ensure coil is centered in rack, 16 GA horizontal plate to cabinet wall at midheight).

Certified Options Summary:
Water Coil.

Certified Mounting Summary:
Mounted in Equipment. Coils to be mounted in coil rack.

Building Code: CBC 2010 | ***Seismic Certification Limits:*** S_{DS} =2.5g | ***z/h*** = 1.0 | I_p = 1.5

Supplier	Model	Dimension (in)			Weight (lb)	Notes	UUT
		Depth	Width	Height			
Alliance Air Products, LLC	HW/CW-12Wx12H	1 Row	12.0	12.0			
	…						
	HW/CW-24Wx24H	10 Row	24.0	24.0		*(Al fins, GS Casing tested)*	2
	HW/CW -24Wx24H	10 Row	24.0	24.0		*(Cu fins, SS Casing tested)*	2
	HW/CW -130Wx60H	8 Row	130.0	60.0		*(Al fins, GS Casing tested)*	5
	HW/CW -130Wx60H	4 Row	130.0	60.0		*(Cu fins, SS Casing tested)*	5
	…						
	HW/CW -130Wx69H	10 Row	130.0	69.0			

© 2010 Tobolski Watkins Engineering, Inc.

Form: 2010-QAP-EF-005, revision 0

Table 7

Special Seismic Certification Certified Product Matrix

TWEI Project No.: 2010-0292-CO-001

Manufacturer: Alliance Air Products, LLC

Model Line: Custom Air Handling Units

MISCELLANEOUS DETAIL

Certified Product Construction Summary:
Doors: Galvanized or Stainless Steel Exterior. Galvanized, Stainless Steel, or Aluminum Interior. 2" Injected Polyurethane Insulation.

Certified Options Summary:

Certified Mounting Summary:
Mounted in Equipment.

Building Code: CBC 2010 | ***Seismic Certification Limits:*** S_{DS} =2.5g | ***z/h*** = 1.0 | I_p = 1.5

Supplier	Model	Dimension (in)			Weight (lb)	Notes	UUT
		Depth	Width	Height			
Alliance Air Products, LLC	Foamed Doors	2.0	12.0	12.0			1B
		…					
		2.0	18.0	36.0		*Doors of various materials tested. Please refer to UUT Summaries for full details*	1B
		2.0	18.0	42.0			3
		2.0	18.0	60.0			4A,2,5
		2.0	24.0	60.0			6,2,7
		2.0	36.0	72.0			3
		…					
		2.0	48.0	78.0			
Commercial Acoustics	Sound Traps	36.0	12.0	12.0	29		1B
		…					
		48.0	48.0	48.0	438		3,3
Sterile Air	UV Lights		18.0				2
		…					
			48.0				5

© 2010 Tobolski Watkins Engineering, Inc.

Form: 2010-QAP-EF-005, revision 0

Table 8

Special Seismic Certification Certified Product Matrix

TWEI Project No.: 2010-0292-CO-001

Manufacturer: Alliance Air Products, LLC

Model Line: Custom Air Handling Units | ***DAMPER & LOUVER DETAIL***

Certified Product Construction Summary:
Dampers: Aluminum (All models)
Louvers: Stainless Steel, Aluminum, or Galvanized Steel

Certified Options Summary:

Certified Mounting Summary:
Mounted in Equipment.

Building Code: CBC 2010 | ***Seismic Certification Limits:*** S_{DS} =2.5g | ***z/h*** = 1.0 | I_p = 1.5

Supplier	Model	Dimension (in)			Weight (lb)	Notes	UUT
		Depth	Width	Height			
Alliance Air Products, LLC & TAMCO	Dampers	4.0	22.0	12.0	4	*Please refer to Certified Project construction summary for material of tested samples.*	1A
		...					
		4.0	40.0	48.0	58		4,4
		...					
		4.0	48.0	108.0	120		3
Alliance Air Products, LLC	Louvers	5.0	22.0	15.0	7	*(Stainless Steel Tested)*	1A
		...					
		5.0	40.0	48.0	170	*(Galvanized Steel Tested)*	4,4
		...					
		5.0	50.0	115.0	320	*(Aluminum Tested)*	3

© 2010 Tobolski Watkins Engineering, Inc.

Form: 2010-QAP-EF-005, revision 0

Table 9

Special Seismic Certification Certified Product Matrix

TWEI Project No.: 2010-0292-CO-001

Manufacturer: Alliance Air Products, LLC

Model Line: Custom Air Handling Units | ***FILTER DETAIL***

Certified Product Construction Summary:
Galvanized or Stainless Steel Frame.

Certified Options Summary:
Flat HEPA Frame. 30-99.99% Filter Efficiency.

Certified Mounting Summary:
Mounted in Equipment.

Building Code: CBC 2010 | ***Seismic Certification Limits:*** S_{DS} =2.5g | ***z/h*** = 1.0 | I_p = 1.5

Supplier	Model	Dimension (in)			Weight (lb)	Notes	UUT
		Depth	Width	Height			
Alliance Air Products, LLC	Filter Frames	3.0	24.0	24.0	7	*1 x 1 Cell*	
		...					
		3.0	96.0	36.0	44	*4 x 1.5 Cell, SS Tested*	1B
		3.0	108.0	48.0	60	*4.5 x 2 Cell, GS Tested*	2
		3.0	120.0	132.0	181	*5 x 5.5 Cell, GS Tested*	4A
		...					
		3.0	132.0	132.0	190	*5.5 x 5.5 Cell*	
Flanders	Pre-Filter	2.0	12.0	24.0	1		1B
		...					
		2.0	24.0	24.0	2		1B
	Final Filter	4.0	12.0	24.0	4		2
		...					
		4.0	24.0	24.0	7		2
	HEPA Filter	12.0	12.0	24.0	26		4A
		...					
		12.0	24.0	24.0	38		4A

© 2010 Tobolski Watkins Engineering, Inc.

Form: 2010-QAP-EF-005, revision 0

Table 10

Special Seismic Certification Certified Product Matrix

TWEI Project No.: 2010-0292-CO-001

Manufacturer: Alliance Air Products, LLC

Model Line: Custom Air Handling Units | ***FURNACE DETAIL***

Certified Product Construction Summary:
Component construction specific to Supplier listed below (all SS construction).

Certified Options Summary:
Horizontal or Drum and Tube Type.

Certified Mounting Summary:
Mounted in Equipment.

Building Code: CBC 2010 | ***Seismic Certification Limits:*** S_{DS} =2.5g | ***z/h*** = 1.0 | I_p = 1.5

Supplier	Model	Dimension (in)			Weight (lb)	Notes	UUT
		Depth	Width	Height			
HeatCo	250,000 BTU	75.1	24.0	17.5	142	*Horizontal Type*	1B
	...						
	400,000 BTU	75.1	33.6	17.5	221	*Horizontal Type*	3
	250,000 BTU	50.0	30.0	28.0	540	*Drum and Tube Type*	3
	...						
	2,250,000 BTU	109.0	77.5	46.6	2,391	*Drum and Tube Type*	7

© 2010 Tobolski Watkins Engineering, Inc.

Form: 2010-QAP-EF-005, revision 0

Table 11

Special Seismic Certification Certified Product Matrix

TWEI Project No.: 2010-0292-CO-001

Manufacturer: Alliance Air Products, LLC

Model Line: Custom Air Handling Units | ***HUMIDIFIER DETAIL***

Certified Product Construction Summary:
Component construction specific to Supplier listed below (All SS construction).

Certified Options Summary:

Certified Mounting Summary:
Mounted in Equipment.

Building Code: CBC 2010 | ***Seismic Certification Limits:*** S_{DS} =2.5g | ***z/h*** = 1.0 | I_p = 1.5

Supplier	Model	Dimension (in)			Weight (lb)	Notes	UUT
		Depth	Width	Height			
Pure Humidifier	Insty/Fast-Pac	3.0	21.0	15.0	65		2
		…					
		5.0	125.0	130.0	160		5

© 2010 Tobolski Watkins Engineering, Inc.

Form: 2010-QAP-EF-005, revision 0

Table 12

Special Seismic Certification Certified Product Matrix

TWEI Project No.: 2010-0292-CO-001

Manufacturer: Alliance Air Products, LLC

Model Line: Custom Air Handling Units | ***VFD DETAIL***

Certified Product Construction Summary:
Component construction specific to model number listed below.

Certified Options Summary:
208/230 or 460V.

Certified Mounting Summary:
Mounted in Equipment.

Building Code: CBC 2010 | ***Seismic Certification Limits:*** S_{DS} =2.5g | ***z/h*** = 1.0 | I_p = 1.5

Supplier	Model	Dimension (in)			Weight (lb)	Notes	UUT
		Depth	Width	Height			
ABB (ACH-550 Series)	1.0 HP	12.6	17.4	33.4	35		1A
	2 HP	12.6	17.4	33.4	35		
	3 HP	12.6	17.4	33.4	35		
	5 HP	12.6	17.4	33.4	35		
	7.5 HP	12.6	17.4	33.4	38		
	10 HP	12.6	17.4	33.4	54		
	15 HP	12.6	17.4	33.4	54		
	20 HP	14.4	20.5	37.7	54		
	25 HP	14.4	20.5	37.7	63		
	30 HP	14.4	20.5	37.7	63		
	40 HP	14.4	20.5	37.7	63		
	50 HP	14.4	20.5	47.7	163		
	60 HP	19.1	28.1	47.7	163		
	75 HP	19.1	28.1	47.7	163		
	100 HP	19.1	28.1	47.7	163		8

© 2010 Tobolski Watkins Engineering, Inc.

Form: 2010-QAP-EF-005, revision 0

Table 13

Special Seismic Certification Certified Product Matrix

TWEI Project No.: 2010-0292-CO-001

Manufacturer: Alliance Air Products, LLC

Model Line: Custom Air Handling Units | ***STARTER PANEL DETAIL***

Certified Product Construction Summary:
Painted galvanized steel enclosure.

Certified Options Summary:
208/230, 460V.

Certified Mounting Summary:
Mounted in Equipment.

Building Code: CBC 2010 | ***Seismic Certification Limits:*** S_{DS} =2.5g | ***z/h*** = 1.0 | I_p = 1.5

Supplier	Model	Dimension (in)			Weight (lb)	Notes	UUT
		Depth	Width	Height			
Alliance Air Products, LLC	5 HP	8.0	20.0	24.0	51		1B
	...						
	100HP	12.0	30.0	40.0	128		6
Starter Panel Contents							
Eaton	Control Transformer					*0.1 kVA Minimum*	1B,6
		...					
						2.0 kVA Maximum	1B,6
LittleFuse	Fuses					*0.5 A Minimum*	1B,6
		...					
						225.0 A Maximum	1B,6
Eaton	Disconnect					*30.0 A Minimum*	1B,6
		...					
						400.0 A Maximum	1B,6
Eaton	Contactors					*9.0 A Minimum*	1B
		...					
						115.0 A Maximum	1B
Eaton	Overload					*1.0 A Minimum*	1B
		...					
						125.0 A Maximum	1B
Eaton	Selector Switch						1B

© 2010 Tobolski Watkins Engineering, Inc.

Form: 2010-QAP-EF-005, revision 0

Table 13 Cont'd.

Special Seismic Certification Certified Product Matrix

TWEI Project No.: 2010-0292-CO-001

Manufacturer: Alliance Air Products, LLC

Model Line: Custom Air Handling Units | ***STARTER PANEL DETAIL***

Certified Product Construction Summary:
Painted galvanized steel enclosure.

Certified Options Summary:
208/230, 460V.

Certified Mounting Summary:
Mounted in Equipment.

Building Code: CBC 2010 | ***Seismic Certification Limits:*** S_{DS} =2.5g | ***z/h*** = 1.0 | I_p = 1.5

Supplier	Model	Dimension (in)			Weight (lb)*	Notes	UUT
		Depth	Width	Height			
ABB	Contactors					*9.0 A Minimum*	6
		…					
						115.0 A Maximum	6
ABB	Overload					*1.0 A Minimum*	6
		…					
						125.0 A Maximum	6
ABB	Selector Switch						6

© 2010 Tobolski Watkins Engineering, Inc.

Form: 2010-QAP-EF-005, revision 0

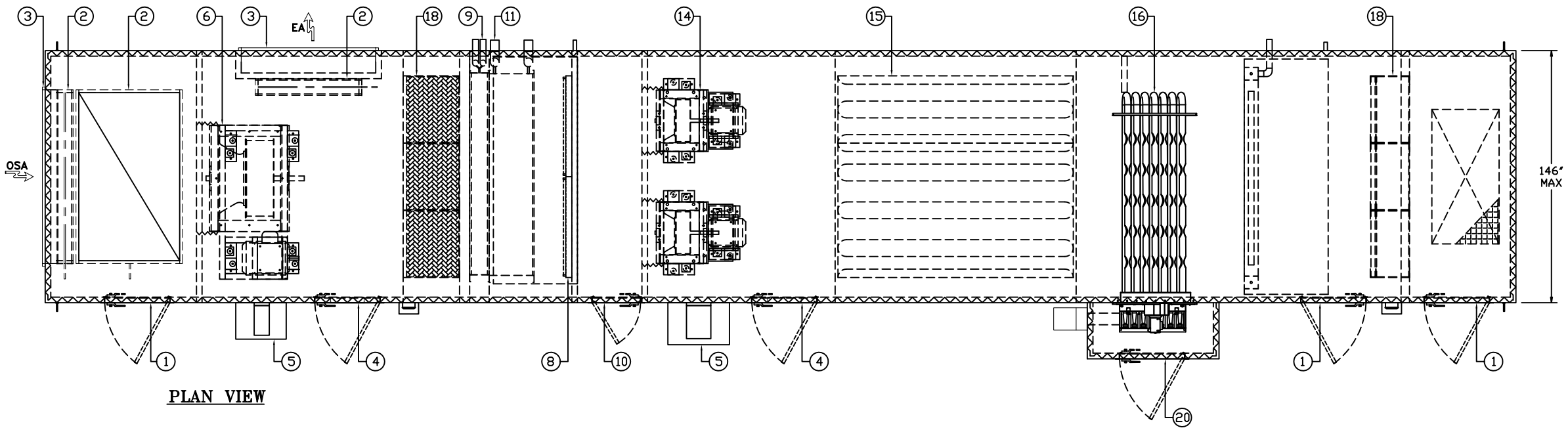

PLAN VIEW

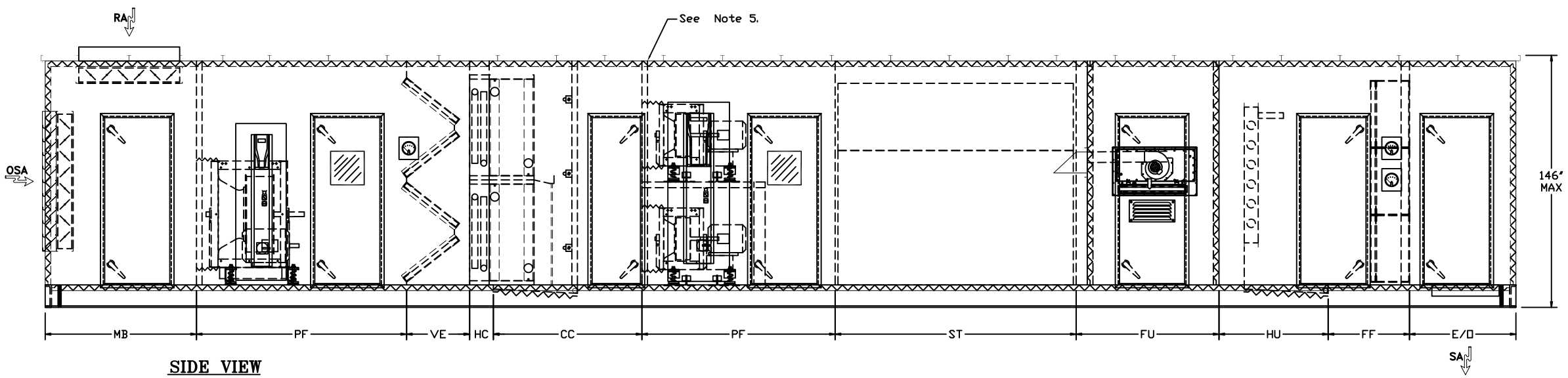

SIDE VIEW

1. Access Door (See Table 7)
2. Damper (See Table 8)
3. Louver (See Table 8)
4. Access Door (See Table 7)
5. VFD & enclosure (See Table 12)
6. Fan & motor (See Table 2, 3, 4 & 5)
7. Louver (See Table 8)
8. UV Lights (See Table 7)
9. Heating Coil (See Table 6)
10. Access Door (See Table 7)
11. Cooling Coil (See Table 6)
12. Access Door (See Table 7)
13. Starter Panel (See Table 13)
14. Fan & motor (See Table 2, 3, 4 & 5)
15. Sound Traps (See Table 7)
16. Gas Furnace (See Table 10)
17. Access Door (See Table 7)
18. Filters (See Table 9)
19. Access Door (See Table 7)
20. Access Door (See Table 7)

SECTIONS :

AB = Air Blender
CC = Cooling Coil
DF = DWDI Fan
DX = DX Coil
EC = Economizer
FF = Flat Filter
FU = Furnace
HC = Heating Coil
HU = Humidifier
MB = Mixing Box
MS = Moisture Separator
MZ = Multizone
PF = Plenum Fan
PFF = Pre/Final Filter
PL = Plenum
PR = Pre-Filter
SC = Steam Coil
ST = Sound Trap
VF = Vee Filter

NOTES :

1. Wall insulation 2" & 4".
2. Cabinet Material: Galvanized Steel, Stainless Steel, Aluminum.
3. Coil rack is required for stacked coils.
4. Unit base heights 4" to 12". Base material steel, aluminum.
5. Two (2) sets of internal seismic cross bracing required @ 10'-0"o.c. max. (Typ. @ each section inlet). See Internal Cross Bracing Sheet for details.
6. Seismic cross bracing to be installed @ each side of shipping splits within AHU.

PRELIMINARY MECHANICAL DRAWING
NOT FOR CONSTRUCTION

Lifting lug locations on mechanical drawing are for representation only. Actual lifting locations will vary depending enginering review.

Alliance AIR PRODUCTS
2285 Michael Faraday Dr. Suite 15
San Diego, CA 92154
Phone (619) 428-9688
Fax (619) 428-9689

Project Name:	OSP Inline Unit	Model:	TBD
Unit Tag:	AHU-1	Qty. :	(1) ONE EACH

PROJECT ENGINEER TSIEBER
DESIGN ENGINEER GSALGADO
DATE 05-01-12 | SCALE N/A | DWG UNITS N/A
FILE: Bid\2012\1205\1201-001\Sub...\Mech...\MD-AHU1-1205-001.dwg

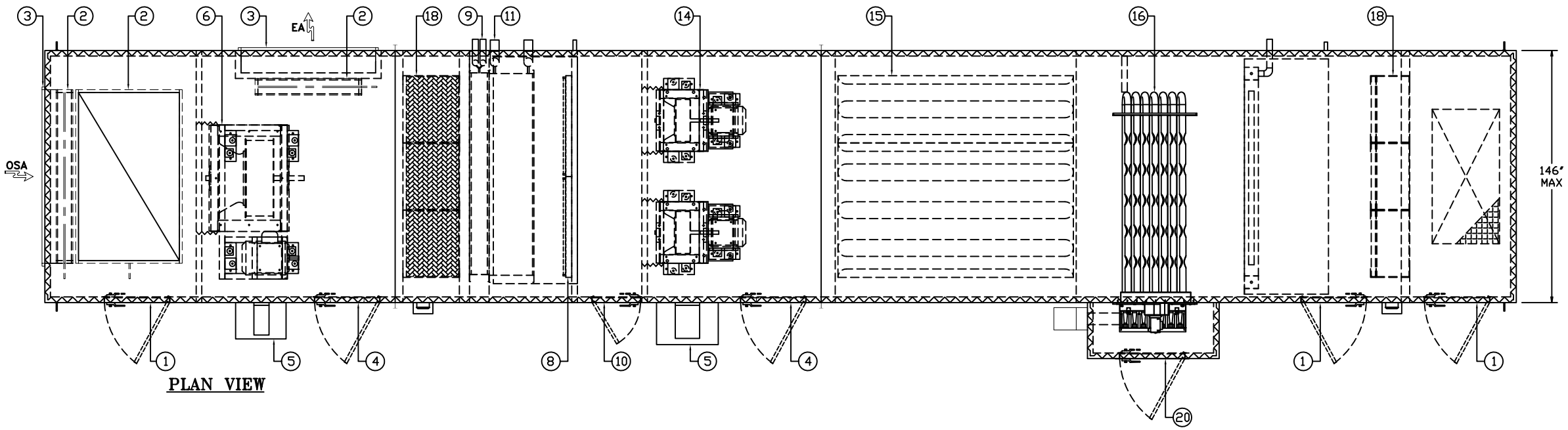

PLAN VIEW

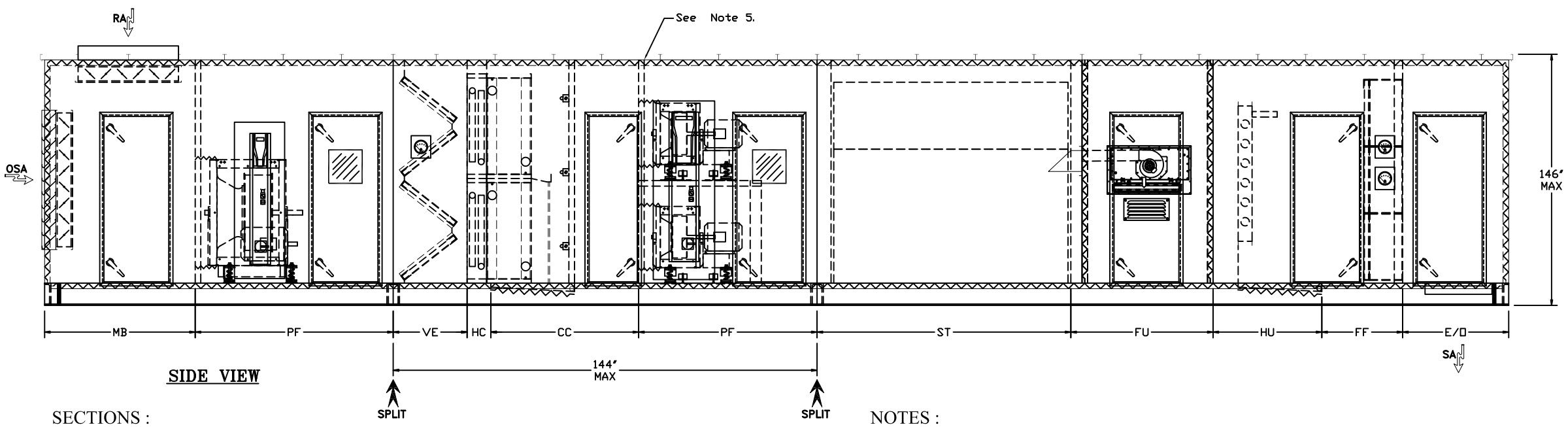

SIDE VIEW

1. Access Door (See Table 7)
2. Damper (See Table 8)
3. Louver (See Table 8)
4. Access Door (See Table 7)
5. VFD & enclosure (See Table 12)
6. Fan & motor (See Table 2, 3, 4 & 5)
7. Louver (See Table 8)
8. UV Lights (See Table 7)
9. Heating Coil (See Table 6)
10. Access Door (See Table 7)
11. Cooling Coil (See Table 6)
12. Access Door (See Table 7)
13. Starter Panel (See Table 13)
14. Fan & motor (See Table 2, 3, 4 & 5)
15. Sound Traps (See Table 7)
16. Gas Furnace (See Table 10)
17. Access Door (See Table 7)
18. Filters (See Table 9)
19. Access Door (See Table 7)
20. Access Door (See Table 7)

SECTIONS :

AB = Air Blender
CC = Cooling Coil
DF = DWDI Fan
DX = DX Coil
EC = Economizer
FF = Flat Filter
FU = Furnace
HC = Heating Coil
HU = Humidifier
MB = Mixing Box
MS = Moisture Separator
MZ = Multizone
PF = Plenum Fan
PFF = Pre/Final Filter
PL = Plenum
PR = Pre-Filter
SC = Steam Coil
ST = Sound Trap
VF = Vee Filter

NOTES :

1. Wall insulation 2" & 4".
2. Cabinet Material: Galvanized Steel, Stainless Steel, Aluminum.
3. Coil rack is required for stacked coils.
4. Unit base heights 4" to 12". Base material steel, aluminum.
5. Two (2) sets of internal seismic cross bracing required @ 10'-0"o.c. max. (Typ. @ each section inlet). See Internal Cross Bracing Sheet for details.
6. Seismic cross bracing to be installed @ each side of shipping splits within AHU.

PRELIMINARY MECHANICAL DRAWING
NOT FOR CONSTRUCTION

Lifting lug locations on mechanical drawing are for representation only. Actual lifting locations will vary depending enginering review.

Alliance AIR PRODUCTS
2285 Michael Faraday Dr. Suite 15
San Diego, CA 92154
Phone (619) 428-9688
Fax (619) 428-9689

Project Name:	OSP Inline Unit w/ Splits	Model:	TBD	PROJECT ENGINEER TSIEBER	
				DESIGN ENGINEER GSALGADO	
Unit Tag:	AHU-1	Qty. :	(1) ONE EACH	DATE 05-01-12	SCALE N/A / DWG UNITS N/A
				FILE: Bid\2012\1205\1201-001\Sub...\Mech...\MD-AHU1-1205-001.dwg	

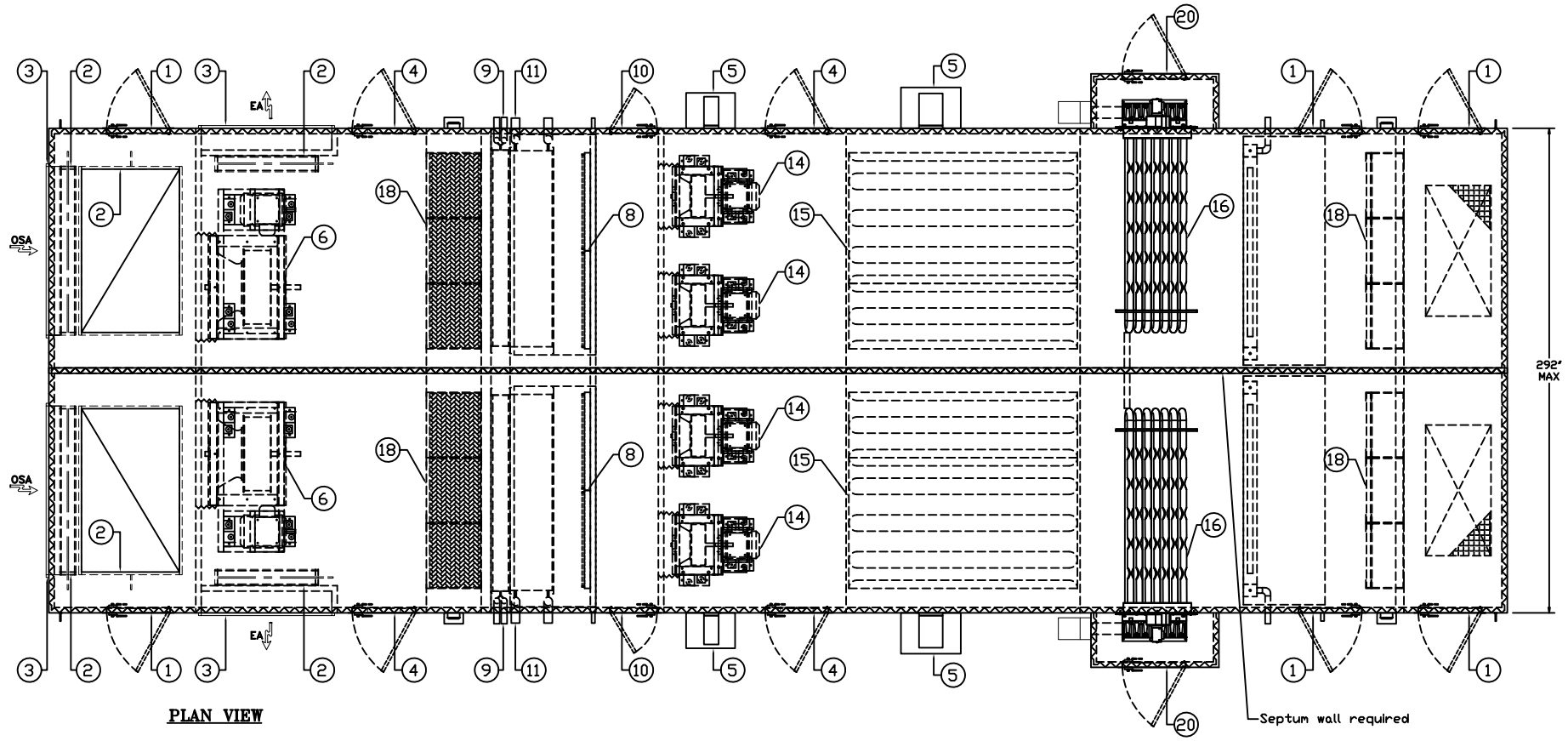

PLAN VIEW

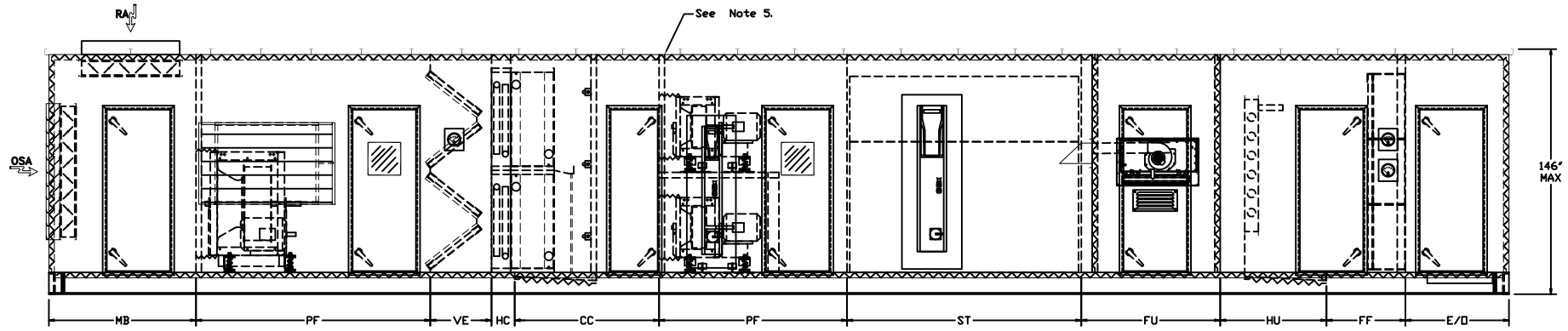

SIDE VIEW

1. Access Door (See Table 7)
2. Damper (See Table 8)
3. Louver (See Table 8)
4. Access Door (See Table 7)
5. VFD & enclosure (See Table 12)
6. Fan & motor (See Table 2, 3, 4 & 5)
7. Louver (See Table 8)
8. UV Lights (See Table 7)
9. Heating Coil (See Table 6)
10. Access Door (See Table 7)
11. Cooling Coil (See Table 6)
12. Access Door (See Table 7)
13. Starter Panel (See Table 13)
14. Fan & motor (See Table 2, 3, 4 & 5)
15. Sound Traps (See Table 7)
16. Gas Furnace (See Table 10)
17. Access Door (See Table 7)
18. Filters (See Table 9)
19. Access Door (See Table 7)
20. Access Door (See Table 7)

SECTIONS :

AB = Air Blender
CC = Cooling Coil
DF = DWDI Fan
DX = DX Coil
EC = Economizer
FF = Flat Filter
FU = Furnace
HC = Heating Coil
HU = Humidifier
MB = Mixing Box
MS = Moisture Separator
MZ = Multizone
PF = Plenum Fan
PFF = Pre/Final Filter
PL = Plenum
PR = Pre-Filter
SC = Steam Coil
ST = Sound Trap
VF = Vee Filter

NOTES :

1. Wall insulation 2" & 4".
2. Cabinet Material: Galvanized Steel, Stainless Steel, Aluminum.
3. Coil rack is required for stacked coils.
4. Unit base heights 4" to 12". Base material steel, aluminum.
5. Two (2) sets of internal seismic cross bracing required @ 10'-0"o.c. max. (Typ. @ each section inlet). See Internal Cross Bracing Sheet for details.
6. Seismic cross bracing to be installed @ each side of shipping splits within AHU.

PRELIMINARY MECHANICAL DRAWING
NOT FOR CONSTRUCTION

Lifting lug locations on mechanical drawing are for representation only. Actual lifting locations will vary depending enginering review.

Alliance AIR PRODUCTS
2285 Michael Faraday Dr. Suite 15
San Diego, CA 92154
Phone (619) 428-9688
Fax (619) 428-9689

Project Name:	OSP Inline Unit	Model:	TBD
Unit Tag:	AHU-1	Qty. :	(1) ONE EACH

PROJECT ENGINEER TSIEBER
DESIGN ENGINEER GSALGADO
DATE 05-01-12 | SCALE N/A | DWG UNITS N/A
FILE: Bid\2012\1205\1201-001\Sub...\Mech...\MD-AHU1-1205-001.dwg

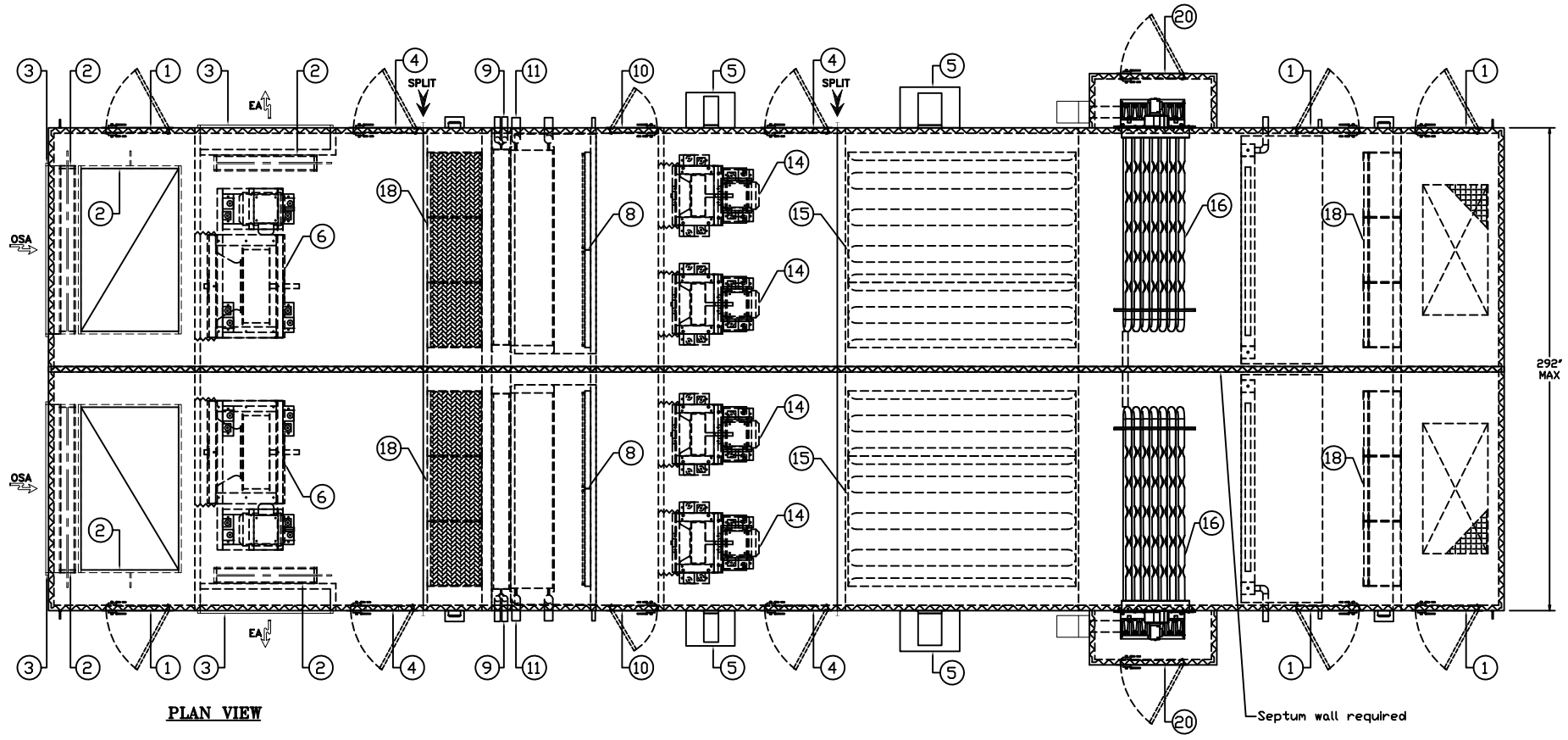

PLAN VIEW

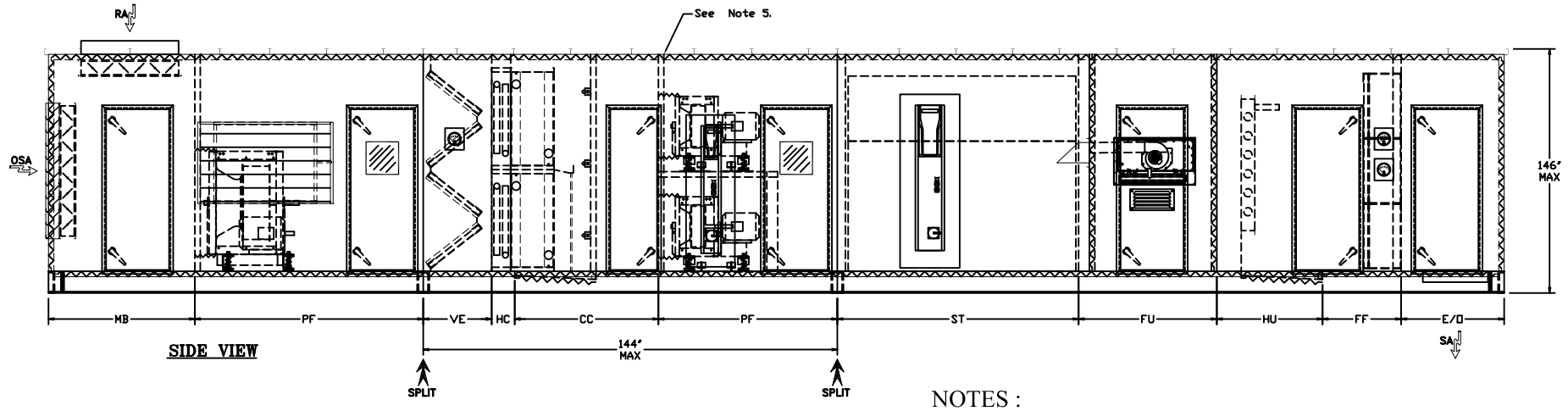

SIDE VIEW

1. Access Door (See Table 7)
2. Damper (See Table 8)
3. Louver (See Table 8)
4. Access Door (See Table 7)
5. VFD & enclosure (See Table 12)
6. Fan & motor (See Table 2, 3, 4 & 5)
7. Louver (See Table 8)
8. UV Lights (See Table 7)
9. Heating Coil (See Table 6)
10. Access Door (See Table 7)
11. Cooling Coil (See Table 6)
12. Access Door (See Table 7)
13. Starter Panel (See Table 13)
14. Fan & motor (See Table 2, 3, 4 & 5)
15. Sound Traps (See Table 7)
16. Gas Furnace (See Table 10)
17. Access Door (See Table 7)
18. Filters (See Table 9)
19. Access Door (See Table 7)
20. Access Door (See Table 7)

SECTIONS :

AB = Air Blender
CC = Cooling Coil
DF = DWDI Fan
DX = DX Coil
EC = Economizer
FF = Flat Filter
FU = Furnace
HC = Heating Coil
HU = Humidifier
MB = Mixing Box
MS = Moisture Separator
MZ = Multizone
PF = Plenum Fan
PFF = Pre/Final Filter
PL = Plenum
PR = Pre-Filter
SC = Steam Coil
ST = Sound Trap
VF = Vee Filter

NOTES :

1. Wall insulation 2" & 4".
2. Cabinet Material: Galvanized Steel, Stainless Steel, Aluminum.
3. Coil rack is required for stacked coils.
4. Unit base heights 4" to 12". Base material steel, aluminum.
5. Two (2) sets of internal seismic cross bracing required @ 10'-0"o.c. max. (Typ. @ each section inlet). See Internal Cross Bracing Sheet for details.
6. Seismic cross bracing to be installed @ each side of shipping splits within AHU.

PRELIMINARY MECHANICAL DRAWING
NOT FOR CONSTRUCTION

Lifting lug locations on mechanical drawing are for representation only. Actual lifting locations will vary depending enginering review.

Alliance AIR PRODUCTS
2285 Michael Faraday Dr. Suite 15
San Diego, CA 92154
Phone (619) 428-9688
Fax (619) 428-9689

Project Name:	OSP Inline Unit w /Splits	Model:	TBD
Unit Tag:	AHU-1	Qty. :	(1) ONE EACH

PROJECT ENGINEER TSIEBER
DESIGN ENGINEER GSALGADO
DATE 05-01-12 | SCALE N/A | DWG UNITS N/A
FILE: Bid\2012\1205\1201-001\Sub...\Mech...\MD-AHU1-1205-001.dwg

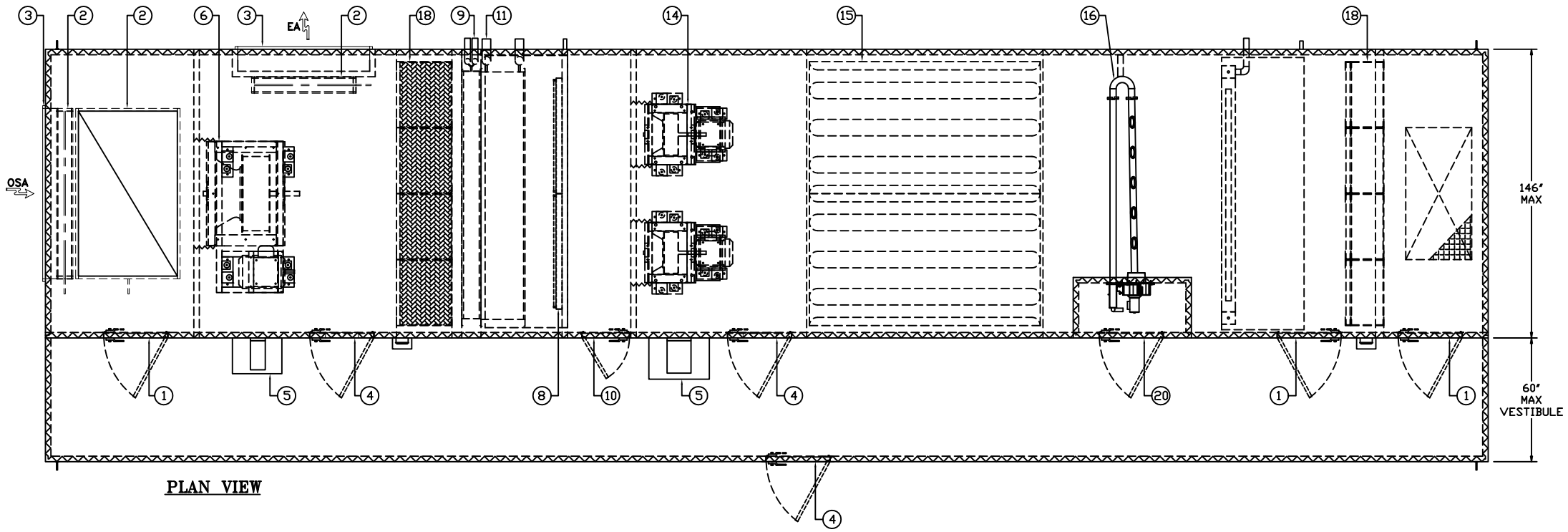

PLAN VIEW

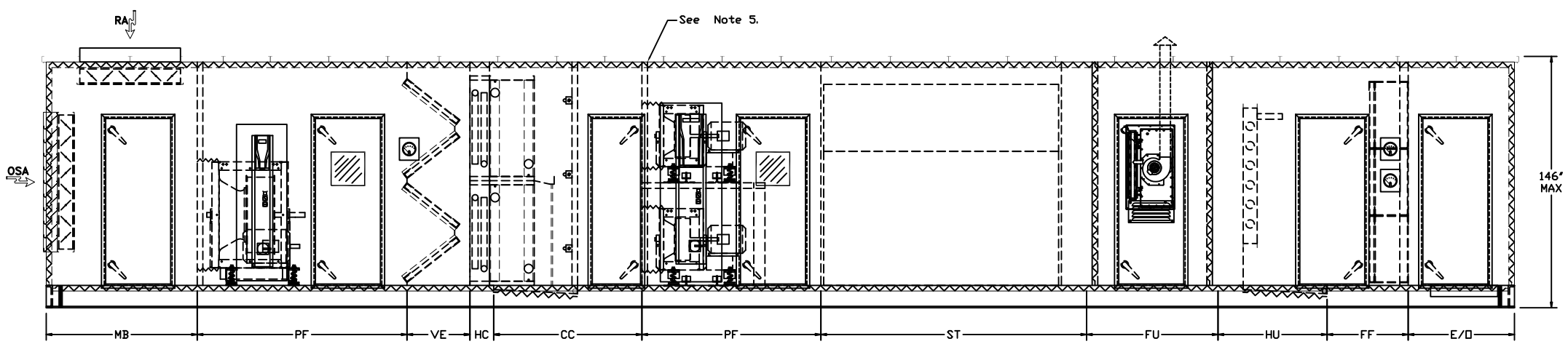

SIDE VIEW

1. Access Door (See Table 7)
2. Damper (See Table 8)
3. Louver (See Table 8)
4. Access Door (See Table 7)
5. VFD & enclosure (See Table 12)
6. Fan & motor (See Table 2, 3, 4 & 5)
7. Louver (See Table 8)
8. UV Lights (See Table 7)
9. Heating Coil (See Table 6)
10. Access Door (See Table 7)
11. Cooling Coil (See Table 6)
12. Access Door (See Table 7)
13. Starter Panel (See Table 13)
14. Fan & motor (See Table 2, 3, 4 & 5)
15. Sound Traps (See Table 7)
16. Gas Furnace (See Table 10)
17. Access Door (See Table 7)
18. Filters (See Table 9)
19. Access Door (See Table 7)
20. Access Door (See Table 7)

SECTIONS :

AB = Air Blender
CC = Cooling Coil
DF = DWDI Fan
DX = DX Coil
EC = Economizer
FF = Flat Filter
FU = Furnace
HC = Heating Coil
HU = Humidifier
MB = Mixing Box
MS = Moisture Separator
MZ = Multizone
PF = Plenum Fan
PFF = Pre/Final Filter
PL = Plenum
PR = Pre-Filter
SC = Steam Coil
ST = Sound Trap
VF = Vee Filter

NOTES :

1. Wall insulation 2" & 4".
2. Cabinet Material: Galvanized Steel, Stainless Steel, Aluminum.
3. Coil rack is required for stacked coils.
4. Unit base heights 4" to 12". Base material steel, aluminum.
5. Two (2) sets of internal seismic cross bracing required @ 10'-0"o.c. max. (Typ. @ each section inlet). See Internal Cross Bracing Sheet for details.
6. Seismic cross bracing to be installed @ each side of shipping splits within AHU.

PRELIMINARY MECHANICAL DRAWING
NOT FOR CONSTRUCTION

Lifting lug locations on mechanical drawing are for representation only. Actual lifting locations will vary depending enginering review.

Alliance AIR PRODUCTS
2285 Michael Faraday Dr. Suite 15
San Diego, CA 92154
Phone (619) 428-9688
Fax (619) 428-9689

Project Name:	OSP Inline Unit	Model:	TBD
Unit Tag:	AHU-1	Qty. :	(1) ONE EACH

PROJECT ENGINEER TSIEBER
DESIGN ENGINEER GSALGADO
DATE 05-01-12 | SCALE N/A | DWG UNITS N/A
FILE: Bid\2012\1205\1201-001\Sub...\Mech...\MD-AHU1-1205-001.dwg

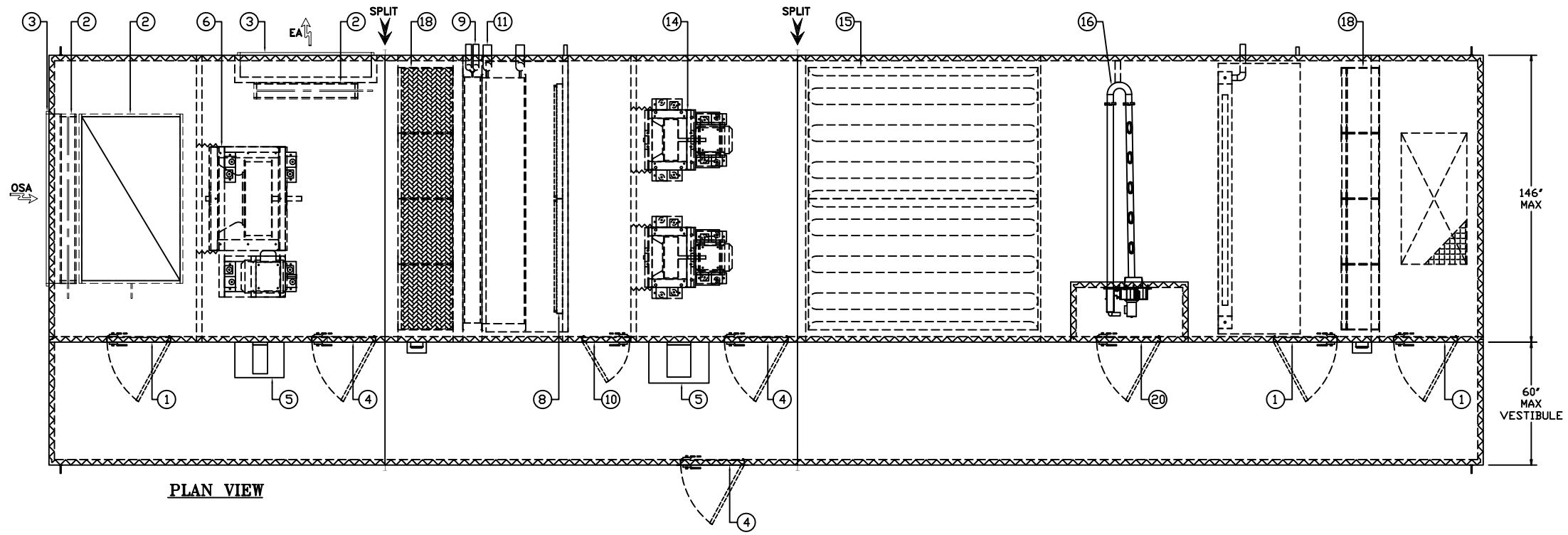

PLAN VIEW

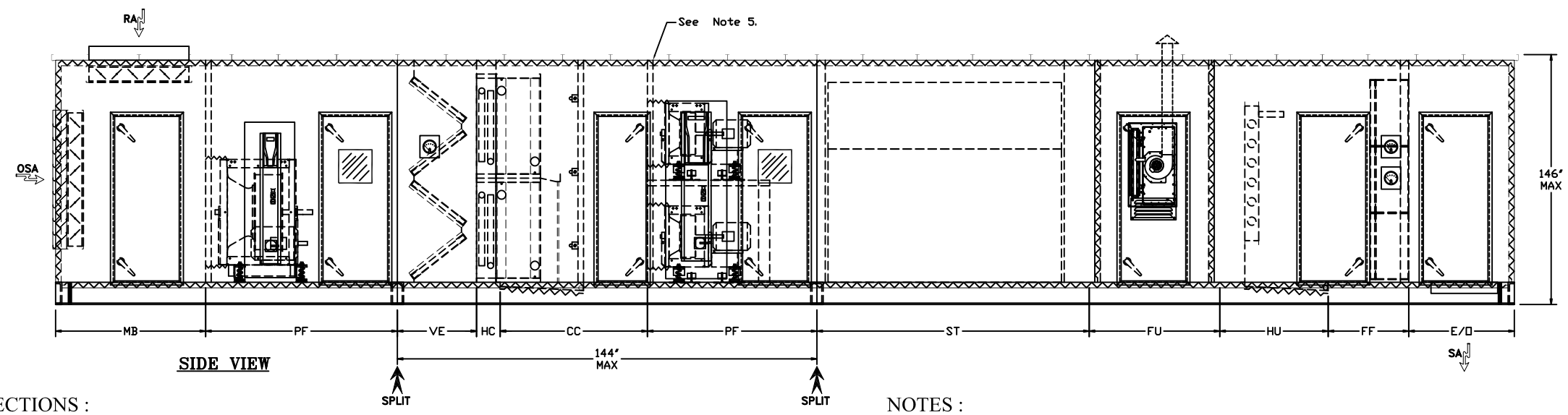

SIDE VIEW

1. Access Door (See Table 7)
2. Damper (See Table 8)
3. Louver (See Table 8)
4. Access Door (See Table 7)
5. VFD & enclosure (See Table 12)
6. Fan & motor (See Table 2, 3, 4 & 5)
7. Louver (See Table 8)
8. UV Lights (See Table 7)
9. Heating Coil (See Table 6)
10. Access Door (See Table 7)
11. Cooling Coil (See Table 6)
12. Access Door (See Table 7)
13. Starter Panel (See Table 13)
14. Fan & motor (See Table 2, 3, 4 & 5)
15. Sound Traps (See Table 7)
16. Gas Furnace (See Table 10)
17. Access Door (See Table 7)
18. Filters (See Table 9)
19. Access Door (See Table 7)
20. Access Door (See Table 7)

SECTIONS :

AB = Air Blender
CC = Cooling Coil
DF = DWDI Fan
DX = DX Coil
EC = Economizer
FF = Flat Filter
FU = Furnace
HC = Heating Coil
HU = Humidifier
MB = Mixing Box
MS = Moisture Separator
MZ = Multizone
PF = Plenum Fan
PFF = Pre/Final Filter
PL = Plenum
PR = Pre-Filter
SC = Steam Coil
ST = Sound Trap
VF = Vee Filter

NOTES :

1. Wall insulation 2" & 4".
2. Cabinet Material: Galvanized Steel, Stainless Steel, Aluminum.
3. Coil rack is required for stacked coils.
4. Unit base heights 4" to 12". Base material steel, aluminum.
5. Two (2) sets of internal seismic cross bracing required @ 10'-0"o.c. max. (Typ. @ each section inlet). See Internal Cross Bracing Sheet for details.
6. Seismic cross bracing to be installed @ each side of shipping splits within AHU.

PRELIMINARY MECHANICAL DRAWING
NOT FOR CONSTRUCTION

Lifting lug locations on mechanical drawing are for representation only. Actual lifting locations will vary depending enginering review.

Alliance AIR PRODUCTS
2285 Michael Faraday Dr. Suite 15
San Diego, CA 92154
Phone (619) 428-9688
Fax (619) 428-9689

Project Name:	OSP Inline Unit	Model:	TBD
Unit Tag:	AHU-1	Qty. :	(1) ONE EACH

PROJECT ENGINEER TSIEBER
DESIGN ENGINEER GSALGADO
DATE 05-01-12 | SCALE N/A | DWG UNITS N/A
FILE: Bid\2012\1205\1201-001\Sub...\Mech...\MD-AHU1-1205-001.dwg

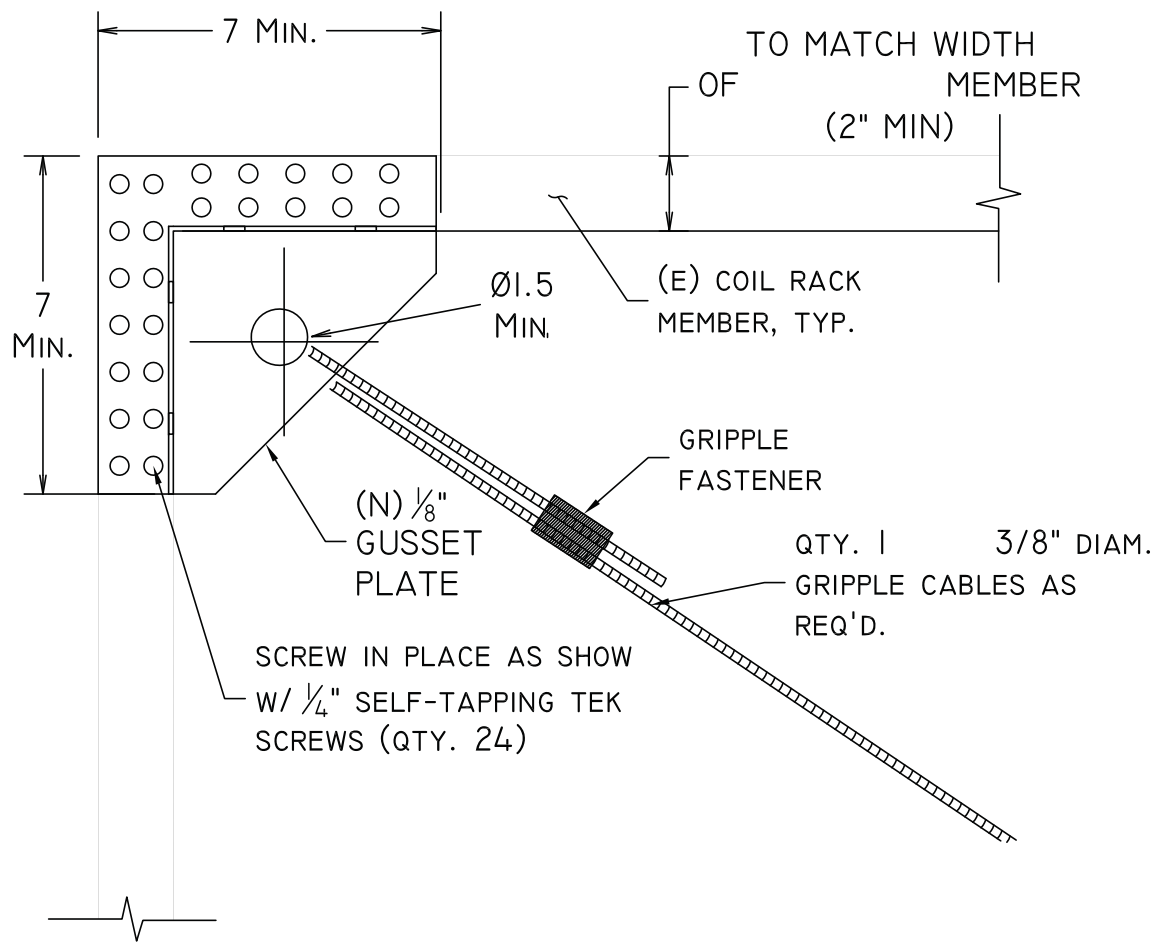

Internal Cross Bracing

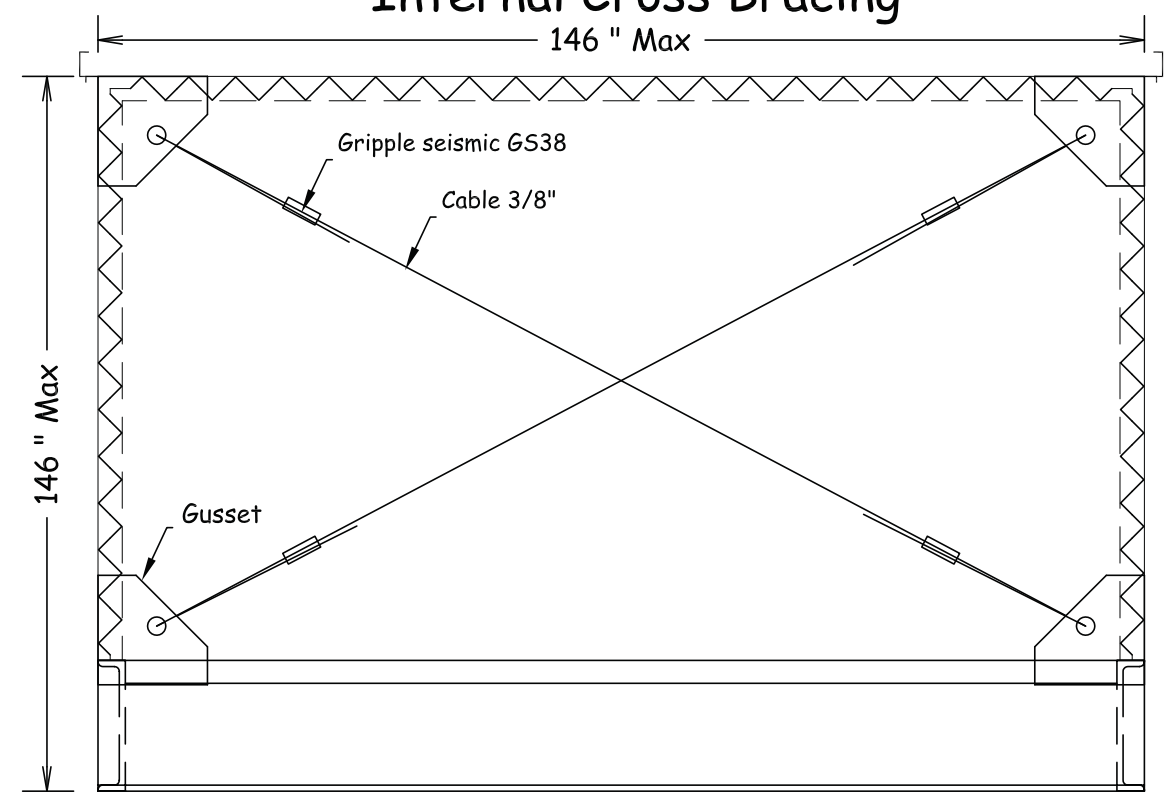

Notes:
1.- Two (2) sets of X-cable braces and gussets required at a max. spacing of 10'.
2.- Seismic restraints to be installed at each side of a shipping split within the AHU.

Alliance AIR PRODUCTS
2285 Michael Faraday Dr. Suite 15
San Diego, CA 92154
Phone (619) 428-9688
Fax (619) 428-9689

Project Name:	Internal Cross Bracing	PROJECT ENGINEER TSIEBER	
		DESIGN ENGINEER IMORENO	
Unit Tag:	Gusset	DATE 06-06-12	SCALE NA	DWG UNITS INCHES
		FILE: \\Project\1600\16003\TEMP 1109-1662\MFG\Gusset\Gusset.dwg	