APPLICATION FOR OSHPD PREAPPROVAL OF MANUFACTURER'S CERTIFICATION (OPM)

OFFICE USE ONLY
APPLICATION #: OPM-0043-13

OSHPD Preapproval of Manufacturer's Certification (OPM)

Type: ☐ New ☒ Renewal ☐ Update to Pre-CBC 2013 OPA Number: OPA-0349

Manufacturer Information

Manufacturer: MASON INDUSTRIES, INC.

Manufacturer's Technical Representative: MASON WEST, INC. – TODD NOCE

Mailing Address: 1601 EAST MIRALOMA AVENUE; PLACENTIA, CA 92870

Telephone: (714) 630-0701 Email: tnoce@masonwest.com

Product Information

Product Name: Numerous Products

Product Type: Seismic Restraint Components for Suspended Utilities

Product Model Number: Mason Industries Inc. Parts = SHB, UCC, SRC, SSBS, SCB, SCBH, SAS(E), SSB; Mason West Inc. Products = MW-PAL-A-CS, PAL-A-MD, CDI, CDI-B, WPL, SAP, KY, SSN, BON, UCC-BON, SCB-BON, WBB, SPC, SSC, SSCE, SCC, SCCI

General Description: Seismic Restraint Guidelines for Suspended Distribution Systems

Applicant Information

Applicant Company Name: MASON INDUSTRIES, INC.

Contact Person: DOUG VALERIO

Mailing Address: 350 RABRO DRIVE; HAUPPAUGE, NY 11788

Telephone: (631) 348-0282 Email: dvalerio@mason-ind.com

I hereby agree to reimburse the Office of Statewide Health Planning and Development review fees in accordance with the California Administrative Code, 2016.

Signature of Applicant: Date: 12/18/15

Title: Vice-President Company Name: Mason Industries, Inc.

REVIEWED FOR CODE COMPLIANCE OPM-0043-13 CALIFORNIA BUILDING CODE, 2013

Registered Design Professional Preparing Engineering Recommendations

Company Name: Mason West, Inc.

Name: JIEFU ZHANG, SE California License Number: S5270

Mailing Address: 1601 EAST MIRALOMA AVE; PLACENTIA, CA 92870

Telephone: (714) 630-0701 Email: jeff@jeffzhangse.com

OSHPD Special Seismic Certification Preapproval (OSP)

☐ Special Seismic Certification is preapproved under OSP-
(Separate application for OSP is required)

☐ Special Seismic Certification is not preapproved

Certification Method(s)

☐ Testing in accordance with: ☐ ICC-ES AC156 ☐ FM 1950-15

☐ Other* (Please Specify):

*Use of criteria other than those adopted by the California Building Standards Code, 2016 (CBSC 2016) for component supports and attachments are not permitted. For distribution system, interior partition wall, and suspended ceiling seismic bracings, test criteria other than those adopted in the CBSC 2016 may be used when approved by OSHPD prior to testing.

☐ Analysis

☐ Experience Data

☐ Combination of Testing, Analysis, and/or Experience Data (Please Specify):

List of Attachments Supporting the Manufacturer's Certification

☐ Test Report ☐ Drawings ☐ Calculations ☐ Manufacturer's Catalog

☐ Other(s) (Please Specify):

OFFICE USE ONLY – OSHPD APPROVAL VALID FOR CBC 2016 & ALL PRE-2016 CODE BASED PROJECTS

Signature: Date: 06-23-2016

Print Name: Jeffrey Kikumoto

Title: SSE

Condition of Approval (if applicable):

REVIEWED FOR CODE COMPLIANCE
oshpd
OPM-0043-13
BY: Jeffrey T. Kikumoto
DATE: 06/23/2016
CALIFORNIA BUILDING CODE, 2013

MASON WEST, INC.

SEISMIC RESTRAINT GUIDELINES FOR SUSPENDED DISTRIBUTION SYSTEMS

3RD EDITION, 2016

OPM-0043-13

REVIEWED FOR CODE COMPLIANCE
CALIFORNIA BUILDING CODE, 2013
OPM-0043-13
BY: Jeffrey Y. Kikumoto
DATE: 06/23/2016

TABLE OF CONTENTS
MECHANICAL, PLUMBING, AND FIRE PROTECTION PIPE

	PAGE(S)
DESIGN GENERAL NOTES	A0.1 - A0.4
GENERAL NOTES	A10.0 - A10.8
DESIGN PROCEDURE	A11.0 - A11.12
LAYOUT OF SEISMIC BRACING	A12.0 - A12.9
12" RULE FOR SUSPENDED PIPING	A13.0
TRANSVERSE BRACE ALLOWABLE BRACE ANGLE VARIATION IN PLAN	A14.0 - A14.1
ALTERNATE ARRANGEMENT OF SEISMIC BRACES	A15.0 - A15.5
ATTACHMENT OPTIONS FOR PIPING TO TRAPEZE	A16.0 - A16.4
INSTALLATION OPTION - OFF STRUT HANGER	A18.0 - A18.7
INSTALLATION OPTION - PIPE CLAMP	A19.0 - A19.1
SEISMIC BRACE TABLES	B1.0 - B1.20
INDIVIDUALLY HUNG PIPE - KIT INSTALLATION DETAILS - SOLID (RIGID) BRACING	C1.10 - C1.75
INDIVIDUALLY HUNG PIPE - KIT INSTALLATION DETAILS - CABLE BRACING (STANDARD)	C2.10 - C2.52
INDIVIDUALLY HUNG PIPE - KIT INSTALLATION DETAILS - WALL ATTACHMENT	C3.10 - C3.30
TRAPEZE SUPPORTED PIPE - KIT INSTALLATION DETAILS - SOLID (RIGID) BRACING	F1.10 - F1.75
TRAPEZE SUPPORTED PIPE - KIT INSTALLATION DETAILS - CABLE BRACING (STANDARD)	F2.10 - F2.42
TRAPEZE SUPPORTED PIPE - KIT INSTALLATION DETAILS - CABLE BRACING (X - PATTERN)	F3.10 - F3.13
TRAPEZE SUPPORTED PIPE - KIT INSTALLATION DETAILS - WALL ATTACHMENT	F4.10 - F4.32
HANGER - STRUCTURE ATTACHMENT DETAILS	M0.00 - M8.41
HANGER INSTALLATION DETAILS WITH ROD STIFFENER	M10.10 - M10.12
BRACE - STRUCTURE ATTACHMENT DETAILS	N0.00 - N7.10
PIPE BRACE SPACING TABLES	S1.0 - S1.5
PIPE CLAMP SPACING TABLES	S3.0 - S3.2.1
TRAPEZE SELECTION TABLES	T2.0 - T2.7
COMPONENTS	X1.0 - X8.4

OSHPD
OPM-0043-13
BY: Jeffrey Y. Kikumoto
DATE: 06/23/2016
CODE REVIEWED FOR CODE COMPLIANCE
CALIFORNIA BUILDING CODE 2013

MASON WEST, INC.
1601 E. Miraloma Ave. Placentia, CA 92870
TEL (714) 630 - 0701, www.masonwest.com

Jiefu "Jeff" Zhang, SE
California SE No. S5270

PAGE
TOC-C

TABLE OF CONTENTS
DUCTWORK

	PAGE(S)
DESIGN GENERAL NOTES	A0.1 - A0.4
GENERAL NOTES	A1.0 - A1.6
DESIGN PROCEDURE	A2.0 - A2.3
LAYOUT OF SEISMIC BRACING	A3.0 - A3.2
12" RULE FOR SUSPENDED DUCTWORK	A4.0
TRANSVERSE BRACE ALLOWABLE BRACE ANGLE VARIATION IN PLAN	A5.0
ALTERNATE ARRANGEMENT OF SEISMIC BRACES	A6.0 - 6.2
INSTALLATION OPTION - OFF STRUT HANGER	A7.0 - A7.3
SEISMIC BRACE TABLES	B2.0 - B4.5
RECTANGULAR DUCT - KIT INSTALLATION DETAILS - SOLID (RIGID) BRACING	D1.10 - D1.35
ROUND DUCT - KIT INSTALLATION DETAILS - SOLID (RIGID) BRACING	D2.10 - D2.32
FACTORY BUILT VENT DUCT - KIT INSTALLATION DETAILS - SOLID (RIGID) BRACING	D3.10 - D3.22
RECTANGULAR DUCT - KIT INSTALLATION DETAILS - CABLE BRACING (STANDARD)	D4.10 - D4.32
RECTANGULAR DUCT - KIT INSTALLATION DETAILS - CABLE BRACING (X - PATTERN)	D5.10 - D5.12
ROUND DUCT - KIT INSTALLATION DETAILS - CABLE BRACING (STANDARD)	D6.10 - D6.22
ROUND DUCT - KIT INSTALLATION DETAILS - CABLE BRACING (X - PATTERN)	D7.10 - D7.12
FACTORY BUILT VENT DUCT - KIT INSTALLATION DETAILS - CABLE BRACING	D8.10 - D8.22
IN LINE DUCT DEVICE - KIT INSTALLATION DETAILS - SOLID (RIGID) BRACING	D9.10 - D9.13
IN LINE DUCT DEVICE - KIT INSTALLATION DETAILS - CABLE BRACING	D10.10 - D10.13
SUSPENDED EQUIPMENT - KIT INSTALLATION DETAILS - SOLID (RIGID) BRACING	D11.10 - D11.13
SUSPENDED EQUIPMENT - KIT INSTALLATION DETAILS - CABLE BRACING (STANDARD)	D12.10 - D12.13
SUSPENDED EQUIPMENT - KIT INSTALLATION DETAILS - CABLE BRACING (X - PATTERN)	D13.10 - D13.13
RECTANGULAR DUCT - KIT INSTALLATION DETAILS - WALL ATTACHMENT	D14.10 - D14.32
HANGER - STRUCTURE ATTACHMENT DETAILS	M0.00 - M8.41
HANGER INSTALLATION DETAILS WITH ROD STIFFENER	M10.10 - M10.12
BRACE - STRUCTURE ATTACHMENT DETAILS	N0.00 - N7.10
TRAPEZE SELECTION TABLES	T1.0 - T1.7
COMPONENTS	X1.0 - X7.1

OSHPD
OPM-0043-13
REVIEWED FOR CODE COMPLIANCE
BY JEFFREY KIKUMOTO
DATE: 06/23/2016
CALIFORNIA BUILDING CODE

MASON WEST, INC.
1601 E. Miraloma Ave. Placentia, CA 92870
TEL (714) 630 - 0701, www.masonwest.com

Jiefu "Jeff" Zhang, SE
California SE No. S5270

PAGE
TOC-D

TABLE OF CONTENTS
ELECTRICAL RACEWAYS

	PAGE(S)
DESIGN GENERAL NOTES	A0.1 - A0.4
GENERAL NOTES	A20.0 - A20.6
DESIGN PROCEDURE	A21.0 - A21.6
LAYOUT OF SEISMIC BRACING	A22.0 - A22.7
12" RULE FOR SUSPENDED RACEWAYS	A23.0
TRANSVERSE BRACE ALLOWABLE BRACE ANGLE VARIATION IN PLAN	A24.0 - A24.2
ALTERNATE ARRANGEMENT OF SEISMIC BRACES	A25.0 - A25.2
ATTACHMENT OPTIONS FOR CONDUITS TO TRAPEZE	A26.0
INSTALLATION OPTION - OFF STRUT HANGER	A27.0 - A27.11
INSTALLATION OPTION - PIPE CLAMP	A28.0 - A28.1
SEISMIC BRACE TABLES	B1.12 - B1.20, B5.0 - B5.8
INDIVIDUALLY HUNG CONDUIT - KIT INSTALLATION DETAILS - SOLID (RIGID) BRACING	C1.10 - C1.35
INDIVIDUALLY HUNG CONDUIT - KIT INSTALLATION DETAILS - CABLE BRACING	C2.10 - C2.32
INDIVIDUALLY HUNG CONDUIT - KIT INSTALLATION DETAILS - WALL ATTACHMENT	C3.10 - C3.30
CONDUITS ON TRAPEZE - KIT INSTALLATION DETAILS - SOLID (RIGID) BRACING	F1.10 - F1.75
CONDUITS ON TRAPEZE - KIT INSTALLATION DETAILS - CABLE BRACING (STANDARD)	F2.10 - F2.42
CONDUITS ON TRAPEZE - KIT INSTALLATION DETAILS - CABLE BRACING (X - PATTERN)	F3.10 - F3.13
CONDUITS ON TRAPEZE - KIT INSTALLATION DETAILS - WALL ATTACHMENT	F4.10 - F4.32
CABLE TRAYS ON TRAPEZE - KIT INSTALLATION DETAILS - SOLID (RIGID) BRACING	E1.10 - E1.32
CABLE TRAYS ON TRAPEZE - KIT INSTALLATION DETAILS - CABLE BRACING (STANDARD)	E2.10 - E2.32
CABLE TRAYS ON TRAPEZE - KIT INSTALLATION DETAILS - CABLE BRACING (X - PATTERN)	E3.10 - E3.12
CABLE TRAYS ON TRAPEZE - KIT INSTALLATION DETAILS - WALL ATTACHMENT	E4.10 - E4.32
HANGER - STRUCTURE ATTACHMENT DETAILS	M0.00 - M8.41
HANGER INSTALLATION DETAILS WITH ROD STIFFENER	M10.10 - M10.12
BRACE - STRUCTURE ATTACHMENT DETAILS	N0.00 - N7.10
CONDUIT BRACE SPACING TABLES	S2.1 - S2.2
PIPE CLAMP SPACING TABLES	S4.1 - S4.2
TRAPEZE SELECTION TABLES	T2.0 - T3.7
COMPONENTS	X1.0 - X8.4

MASON WEST, INC.
1601 E. Miraloma Ave. Placentia, CA 92870
TEL (714) 630 - 0701, www.masonwest.com

Jiefu "Jeff" Zhang, SE
California SE No. S5270

PAGE
TOC-E

DESIGN GENERAL NOTES

Conditions of Use:

This OSHPD Pre-approval of Manufacturer's Certification (OPM) is based on the 2013 CBC. The Demand (design forces) for use with the OPM shall be based on the 2013 CBC.

Maximum allowable S_{DS} for this OPM is limited to 2.5g.

These drawings are prepared for Mason West Inc.

This pre-approval is for the seismic bracing of interior pipes, ducts, conduits and cable trays. It does not address other loads such as, but not limited to, those generated by thermal growth, pressure, fluid dynamics, pipe rupture, or movements of equipment to which brace components are attached. It does not address components that cross seismic separations of buildings. Nor does it address components (other than pipe risers) attached to portions of the structure or equipment that will experience relative seismic displacement. The range of component sizes and material included in the pre-approval are as follows:

a) Pipes:
   i. Steel; Sch. 10 and larger - Sizes up to 30"
   ii. Copper; Type L and K - Sizes up to 6"
   iii. Cast Iron Pipe - Sizes 2" - 12"
b) Ducts:
   i. Galvanized Rectangular Duct; all sizes up to 120" wide
   ii. Galvanized Round Duct; 3" to 84"
c) Conduits/Cable Trays:
   i. RMC Conduit - Sizes up to 6"
   ii. IMC Conduit - Sizes up to 4"
   iii. EMT Conduit - Sizes up to 4"
   iv. Cable trays -- ladder type, all sizes
d) Fire Protection (or Sprinkler) Pipes:
   i. Steel; Sch. 10 (Sizes up to 8"), Sch. 40 (Sizes up to 12")

REVIEWED FOR CODE COMPLIANCE
OSHPD
OPM-0043-13
BY: Jeffrey Y. Kikumoto
DATE: 06/23/2016
CALIFORNIA BUILDING CODE, 2013

The substrates included in this pre-approval are as follows:

a) Concrete
b) Metal Decking
c) Steel
d) Wood

Registered Design Professional Responsibility:

The Registered Design Professional (RDP) is the engineer executing the design of the seismic bracing system. The RDP delivers the complete seismic bracing design to the Structural Engineer of Record (SEOR) for the OSHPD project. It is the responsibility of the Registered Design Professional in responsible charge to:

1) Verify that the nonstructural components or system is seismically qualified in accordance with the 2013 CBC.

2) Verify that the proper Mason West Inc. brace system is selected to meet the seismic requirements of this OPM.

MASON WEST, INC.
1601 E. Miraloma Ave. Placentia, CA 92870
TEL (714) 630 - 0701, www.masonwest.com

Jiefu "Jeff" Zhang, SE
California SE No. S5270

PAGE
A0.1

DESIGN GENERAL NOTES

3) Verify that the structure to which the Mason West Inc. seismic brace is anchored meets the requirements of the applicable anchorage ICC ESR Report.

4) Verify that anchor edge distance and spacing meets the requirements of the applicable ICC ESR.

5) Verify that the installation is in conformance with the 2013 CBC and with details shown in this OPM. Testing of post installed anchors shall also be performed in accordance with 2013 CBC Section 1913A.7.

Layout Drawings:

A) Layout drawings of the supports, attachments, and bracing systems in accordance with the pre-approval shall be submitted to the Registered Design Professional (RDP) in responsible charge of the project for review to verify that the details are in conformance with the code requirements. The layout drawings shall, as a minimum, satisfy the requirements of ASCE 7 Section 13.6 (including Supplements # 1 & # 2) as modified by CBC 2013 Section 1616A.

1. The Structural Engineer Of Record (SEOR) shall verify that the supporting structure is adequate for the forces imposed on it by the supports, attachments and braces installed in accordance with the pre-approval in addition to all other loads.

2. The SEOR shall forward the supports, attachments, and bracing drawings (including construction documents for supplementary framing, where required) to the discipline in responsible charge with a notation indicating that the drawings have been reviewed and are in general conformance with the pre-approval and the design of the project.

3. A "review stamp" may be used to indicate compliance with this requirement.

4. The Registered Design Professional (RDP), other than SEOR, may provide the shop drawing stamp for small projects at the discretion of OSHPD.

B) The SEOR shall design any supplementary framing that is needed to resist the loads, maintain stability and/or is required for installation of pre-approved system.
- The supplementary framing shall be submitted to OSHPD as construction documents.

C) The layout drawings (with the review stamp) shall be submitted to OSHPD for review of the following:

1) Structure supporting the distribution system has adequate capacity;
2) Seismic design forces (F_P) are in accordance with the 2013 CBC; and
3) Verify that submittal is within the scope of OSHPD Preapproval of Manufacturer's Certification (OPM):
   a. Size of distribution system components
   b. Spacing of bracing and flex. joints, and
   c. Substrate for attachments
   d. Review of those parts not approved through the OPM.

REVIEWED FOR CODE COMPLIANCE
OSHPD
OPM-0043-13
BY: Jeffrey Y. Kikumoto
DATE: 06/23/2016
CALIFORNIA BUILDING CODE 2013

MASON WEST, INC.
1601 E. Miraloma Ave. Placentia, CA 92870
TEL (714) 630 - 0701, www.masonwest.com

Jiefu "Jeff" Zhang, SE
California SE No. S5270

PAGE
A0.2

DESIGN GENERAL NOTES

D. The layout drawings (with the shop drawing stamp) shall be kept on the jobsite and can then be used for installation of the support and bracing.
   - OSHPD field staff will review the installation.

E. A copy of the bracing system(s) installation guide/OPM manual shall be on the jobsite prior to starting the installation of hangers and/or braces.
   - It is the contractor's responsibility to obtain copies of the OPM and furnish the IOR with one copy of each.

F. Components of two or more pre-approved bracing systems shall not be mixed.
   - Only one pre-approved bracing system may be used for a run of pipe, duct, or conduit.
   - Any substitution of a component of an OPM system shall require OSHPD review and approval.

Expansion Anchors:

1) All post installed concrete anchors shall meet requirements of 2013 CBC 1616A.1.19, and be installed per their ICC ESR report.
2) The special inspector shall be on the jobsite continuously during anchor installation, unless otherwise noted in the ICC ESR.
3) Expansion anchors to be tested per the requirements specified in 2013 CBC Section 1913A.7.

Definitions:

1) Snug tight - Tightness required to bring the connected plies into firm contact, and that the nuts could not be removed without the use of a wrench.

REVIEWED FOR CODE COMPLIANCE
CALIFORNIA BUILDING CODE, 2013
osHpd
OPM-0043-13
BY: Jeffrey Y. Kikumoto
DATE: 06/23/2016

MASON WEST, INC.
1601 E. Miraloma Ave. Placentia, CA 92870
TEL (714) 630 - 0701, www.masonwest.com

Jiefu "Jeff" Zhang, SE
California SE No. S5270

PAGE
A0.3

EXPANSION ANCHOR TEST VALUES

	Anchor Size	Concrete Slab Test Values	Soffit of Concrete over Deck Test Values	Torque Test Values
	(in)	(lbs)	(lbs)	(ft-lbs)
HILTI KB-TZ	3/8	1700	960	25
	1/2	3660	1780	40
	5/8	5080	2660	60
	3/4	6580	2160	110
POWERS POWER-STUD+ SD1	3/8	1520	940	25
	1/2	1860	1640	40
	5/8	2900	1360	80
	3/4	-	1940	110
POWERS POWER-STUD+ SD2	3/8	1620	980	20
	1/2	3260	1760	40
	5/8	5560	3560	60
	3/4	4620	2360	110
MASON IND. N.Y. SAS(E)	3/8	2060	1780	30
	1/2	2800	1860	60
	5/8	5160	3400	90
	3/4	6360	1920	150

	Anchor Size	CMU Wall Test Values	Torque Test Values
	(in)	(lb)	(ft-lbs)
HILTI KB-3	1/2	1450	25

OPM-0043-13
BY: Jeffrey Y. Kikumoto

NOTES:

1. Anchor diameter refers to the thread size.
2. Apply proof test loads to anchors without removing the nut if possible. If not, remove nut and install a threaded coupler to the same tightness of the original nut using a torque wrench and apply load.
3. Reaction loads from test fixtures may be applied close to the anchor being tested, provided the anchor is not restrained from withdrawing by the fixture(s).
4. Test equipment is to be calibrated by an approved testing laboratory in accordance with standard recognized procedures.
5. Testing shall be done in the presence of the special inspector and a report of the test results shall be submitted to the enforcement agency.
6. The following criteria apply for the acceptance of installed anchors:
   HYDRAULIC RAM METHOD: The anchor should have no observable movement at the applicable test load. A practical way to determine observable movement is that the washer under the nut becomes loose.
   TORQUE WRENCH METHOD: The applicable test torque must be reached within 1/4 turn of the nut for 3/8" diameter anchors and 1/2" turn of the nut for all others.
7. Testing should occur 24 hours minimum after installation of the subject anchors.
8. Refer to appropriate M1 and N1 pages for appropriate slab installation parameters. Refer to appropriate M2 and N2 pages for appropriate soffit of concrete over metal deck installation parameters.

MASON WEST, INC.
1601 E. Miraloma Ave. Placentia, CA 92870
TEL (714) 630 - 0701, www.masonwest.com

Jiefu "Jeff" Zhang, SE
California SE No. S5270

PAGE
A0.4

DUCTWORK GENERAL NOTES

1) This OSHPD Preapproval of Manufacturer's Certification (OPM) is based on the 2013 CBC. The demand (design forces) for use with this OPM shall be based on the 2013 CBC.

2) Per ASCE 7-10, Section 13.3.1, restraints and their anchorages must be capable of restraining horizontal, F_P , and vertical, F_{PV}, seismic accelerations as follows.

$$F_P = (0.7)\frac{0.4a_P S_{DS} W_P}{R_P/I_P}\left(1+2\frac{z}{h}\right) \qquad \text{(ASD)} \qquad \text{(ASCE 7-10 EQ 13.3-1)}$$

is not required to be taken greater than $(0.7)1.6S_{DS}I_PW_P$ (ASD) (ASCE 7-10 EQ 13.3-2)

shall not be taken less than $(0.7)0.3S_{DS}I_PW_P$ (ASD) (ASCE 7-10 EQ 13.3-3)

$$F_{PV} = (0.7)0.2S_{DS}W_P \qquad \text{(ASD)}$$

Where:

- S_{DS} = short period spectral acceleration - up to 2.5g. Values of S_{DS} indicated in the general notes of the structural drawing take precedence over those calculated per ASCE 7-10, 11.4.4.
- W_P = component (or tributary length of duct) operating weight (lbs/ft).
- I_P = component importance factor
  - = 1.5 for OSHPD 1 & 4 in accordance with the 2013 CBC, Section 1616A.1.17 and for OSHPD 2 & 3, where required by ASCE 7, Section 13.1.3.
  - = 1.0 for OSHPD 2 & 3, when permitted by ASCE 7, Section 13.1.3.
- a_P = component amplification factor (Ref. ASCE 7-10, Table 13.6-1)
  - = 2.5 for airside HVAC equipment and ductwork.
- R_P = component response modification factor (Ref. ASCE 7-10, Table 13.6-1)
  - = 3.0 for ductwork, including in-line devices, constructed of low-deformability materials, such as cast iron, glass and non-ductile plastics.
  - = 6.0 for airside HVAC equipment and ductwork, including in-line duct devices, constructed of high- or limited deformability materials, with joints made by means other than welding or brazing.
  - = 9.0 for ductwork, including in-line duct devices, constructed of high-deformability materials, with joints made by welding or brazing.

  Note: Per ASCE 7-10, Section 13.4.1, do not use an Rp factor greater than 6.0 when calculating Fp and Fpv for design of the attachment.
- z = height in structure of point of connection of component with respect to base (ft).
- h = average roof height of structure with respect to base (ft).

3) For systems anchored to concrete only, the anchorage to concrete overstrength factor, Ωo, must be applied. Sections M & N provide alternate allowable load tables with and without Ωo applied. For cases where Ωo is applicable, use the appropriate tables in Sections M & N so it is not necessary to apply this factor when calculating F_P and F_{PV}. Ωo is not applicable if a yielding steel element is considered in the load path. Refer to ACI 318-11 Appendix D, Section D.3.3.4.3 for a list of qualifying conditions. The Registered Design Professional (RDP) shall use the allowable vertical loads under overstrength factor Ωo = 2.5 unless the vertical support complies with one of the qualifying conditions.

4) A complete description on how to use these guidelines is provided in Section A2. It includes specific examples for both using the enclosed details/charts and a layout procedure for bracing of suspended duct systems.

MASON WEST, INC.
1601 E. Miraloma Ave. Placentia, CA 92870
TEL (714) 630 - 0701, www.masonwest.com

Jiefu "Jeff" Zhang, SE
California SE No. S5270

PAGE
A1.0

DUCTWORK GENERAL NOTES (continued)

Notes on Seismic Bracing:

1) These guidelines list installations which may be exempt from seismic bracing under the 2013 CBC. The RDP shall be responsible for determining whether to allow these exceptions, subject to approval by the SEOR and OSHPD.

2) Each straight run of a duct system requires a minimum of two transverse braces (perpendicular to the run). (Option: A longitudinal brace located at any point of the straight run on the opposite side of an elbow or tee may act as a transverse brace. Refer to the layout examples detailed in Section A3.)

3) Each straight run of a duct system requires a minimum of one longitudinal brace (parallel to the run). (Option: A transverse brace on the opposite side of an elbow or tee can act as a longitudinal brace provided it is located within 2 feet of the elbow or tee. Refer to the layout examples detailed in Section A3.)

   Note: For items 2) and 3) above, a short run of ductwork may not require seismic bracing if its tributary seismic load transfers to an adjacent run of ductwork that is sufficiently seismically braced that can accept the additional seismic loads, when approved by OSHPD for a specific project.

4) Transverse and longitudinal braces that project to the overhead structure shall be installed between 30 and 60 degrees from horizontal. Braces that project to an adjacent wall may be installed directly horizontal (zero degrees) or between 30 and 60 degrees from the horizontal. However, this is limited depending on the capacity of the brace and method of connection to structure.

5) Seismic bracing may consist of solid bracing designed to accept loads in tension and compression or cable bracing designed to accept tension loads only. Each brace method requires a vertical hanger within close proximity of their connection to the distribution system. (Refer to the specific detail for limitations). The vertical hanger may or may not require stiffening or additional anchorage to the structure (Refer to Notes on Supports, Page A1.2).

6) Avoid mixing solid bracing with cable bracing in the same direction on any run of a distribution system unless specifically engineered and approved by the enforcement agency.

7) Avoid bracing a system to two different parts of a building which may act differently in response to an earthquake (i.e. separated by a seismic joint) . In cases where this may occur, the duct run must be designed to accept the seismic relative displacement.

8) Systems with significant thermal motion shall be designed on a case by case basis by a professional engineer familiar with both seismic loading and thermal expansion.

9) Seismic brace details for suspended duct systems include maximum allowable horizontal seismic load, F_P, at different brace angles. The details include Mason Industries N.Y. seismic brace component size, aircraft cable or solid brace member size, acceptable hanger rod diameter(s) and hanger rod stiffening requirements. Trapeze member sizes and connection to structure for both hanger rods and seismic braces are tabulated and/or detailed in Sections B, T, M, and N, respectively.

10) Seismic brace requirements for seismic accelerations ranging from 0.25 to 1.0g (ASD) are tabulated in Sections B2, B3 and B4. Each schedule is designed to a specific seismic acceleration and provides maximum transverse, longitudinal and all-directional brace spacings based on operating weight per linear foot of the duct system. In addition, the schedules provide hanger rod and seismic brace connection options that meet the same criteria.

REVIEWED FOR CODE COMPLIANCE
OPM-0043-13
BY: Jeffrey Y. Kikumoto
DATE: 06/23/2016
CALIFORNIA BUILDING CODE, 2013

MASON WEST, INC.
1601 E. Miraloma Ave. Placentia, CA 92870
TEL (714) 630 - 0701, www.masonwest.com

Jiefu "Jeff" Zhang, SE
California SE No. S5270

PAGE
A1.1

DUCTWORK GENERAL NOTES (continued)

11) Stacked duct systems that share support rods must be braced independently from one another. Each section of threaded rod between trapezes and/or the building structure is subject to vertical stiffening requirements.

12) Vertical drops from suspended duct systems to equipment (or flexible connectors where applicable) may be braced using the transverse and longitudinal braces in this manual. Note: Do not exceed ½ of the maximum brace spacing as measured from the seismic brace to the equipment or flexible connector when bracing vertical drops. (Refer to Layout of Seismic Braces, Section A3). If the transverse or longitudinal brace cannot accept the full vertical drop, a seismic floor support designed for the applicable loads is required. Design of this support shall account for seismic relative displacement between floors and may require a flexible connection between the floor support and the first seismic brace location above.

13) Any system which crosses a building separation or seismic joint must be designed to accommodate the seismic relative displacement per ASCE 7-10 13.3.2, 13.3.2.1, and 13.3.2.2, or as specified by the engineer of record for approval by the enforcement agency.

Notes on Supports:

1) Where the seismic brace system incorporates the use of a threaded vertical hanger rod designed to carry gravity loads only, additional anchorage and/or stiffening may be required as detailed. General support of suspended duct systems and equipment to carry gravity loads shall be determined by the engineer of record and/or mechanical code requirements. However, hanger rod connection details in this manual may be used as a guide for these supports. The use of "C-Clamps" designed to attach threaded rod to one side of a steel beam flange shall not be used unless they are provided with a restraining strap or hook to the opposite beam flange equivalent to those specified in NFPA 13, Section 9.3.7 and approved by OSHPD.

2) Support rod capacity and its anchorage to the structure is an important part of a solid bracing system. Solid braces shall not be attached to existing systems or support rods designed for gravity loads unless they are checked for increased loads.

3) Threaded vertical hanger rods where seismic sway bracing is attached may require stiffening if the length of the rod exceeds the maximum unbraced rod length indicated on the kit installation detail in Section D. However, if the calculated compression on the rod due to combined gravity, the vertical brace component of the bracing system as a result of Fp, and Fpv loads is less than or equal to zero, no rod stiffening is required, regardless of rod length. A vertical rod stiffener using a 1⅝"x1⅝"x12ga strut channel or angle cut to the appropriate length and attached to the threaded rod with a minimum of two Mason Ind. N.Y. Type UCC or SRC clamps is required, as detailed in Section D. The contractor may substitute a break-off bolt set to a minimum of 10 ft-lbs (Ref. X3.0). Rod stiffening strut may be solid, slotted or punched. Ref. X7.0 and X7.1 for strut member data.

4) Trapeze supports shall consist of 12 gauge single or double channel strut, steel angles or tube steel as tabulated in Sections B and T. For gravity-only trapeze supports and trapeze supports where transverse seismic braces are installed, the acceptable size of the trapeze member is provided in the same sections. For trapeze supports where longitudinal seismic braces are to be installed, the acceptable size of the trapeze member is also provided. Trapeze members may be provided with round holes sized for hanger rods. Ref. X7.0 and X7.1 for strut member data. In all cases, for analysis purposes, the following information is required: a) seismic 'g' coefficient, b) duct weight per foot and c) maximum span between threaded rod supports. The trapezes shall be supported by threaded rods, with nuts and washers as detailed in Section D, with rod stiffeners as required per Note 3.

5) Concrete overstrength factor, Ω_0, is not required for hanger supports designed for gravity only or hanger supports at seismic cable brace locations where seismic forces do not exceed 20% of the total forces.

REVIEWED FOR CODE COMPLIANCE
OPM-0043-13
BY: Jeffrey Y. Kikumoto
DATE: 06/23/2016
CALIFORNIA BUILDING CODE, 2013

MASON WEST, INC.
1601 E. Miraloma Ave. Placentia, CA 92870
TEL (714) 630 - 0701, www.masonwest.com

Jiefu "Jeff" Zhang, SE
California SE No. S5270

PAGE
A1.2

DUCTWORK GENERAL NOTES (continued)

Notes on Seismic Cable Bracing:

1) Cables shall be prestretched galvanized 7x19 strand core aircraft cable, with no limit to their installed length. Cables meet the following specifications: MIL-DTL-83420M with Amendment 2, Type 1 non-jacketed cable.

2) Cables shall be installed slightly slack, so as not to support gravity loads.

3) Cable shall connect the braced item to a building structural element. Cable shall have a bracket at each end to make the connections. The cable assembly, with connection brackets, shall be Mason Ind. N.Y. SCB or SCBH, refer to pages X1.0 & X1.1. Cable is held to end brackets with one or two bolts. Cable bolts shall be tightened to the torque values stated in the details or, in the case where break off nuts are provided, until the nut breaks off. Break off nuts are as manufactured by Mason West, Inc. (Refer to Page X4.0).

4) The Mason Ind. N.Y. SCBH component can be used for connection directly to the threaded vertical hanger rod used for supporting system gravity loads as detailed in Section D.

5) The SCB bracket and cable (Ref. X1.0), SCBH bracket and cable (Ref. X1.1), and UCC rod stiffener clamp (Ref. X3.0) are manufactured by Mason Ind. N.Y. and are included (with accompanying hardware) in the kit options provided in Section D.

Notes on Seismic Solid (Rigid) Bracing:

1) Solid bracing members shall be 12 gauge channel strut or steel angle. Strut members may be solid, slotted or punched. The details in Section D indicate the minimum solid brace size based on a maximum solid brace length. The charts on pages X2.0 and X2.1 tabulate different solid brace member sizes for maximum installed lengths of 5'-0", 9'-6" or 14'-6". Ref. X7.0 and X7.1 for strut member data.

2) Solid brace members shall be connected to both the distribution system and the structure using the seismic solid brace components (Mason Ind. N.Y. Type SSBS or SHB. Refer to pages X2.0 or X2.1, respectively).

3) The attachment between the solid brace component and the 12 gauge channel strut shall consist of (1) or (2) 1/2" bolt and strut nut connections torqued to 50 ft-lbs or, in the case where break off nuts are provided, until the nut breaks off. Refer to Section D to determine the quantity of bolt/strut nut connections required. Break off nuts are as manufactured by Mason West, Inc. (Refer to Page X4.0).

4) The SSBS bracket (Ref. X2.0), SHB bracket (Ref. X2.1), and UCC rod stiffener clamp (Ref. X3.0) are manufactured by Mason Ind. N.Y. and are included in the kit options (with accompanying hardware) provided in Section D.

REVIEWED FOR CODE COMPLIANCE
OSHPD
OPM-0043-13
BY: Jeffrey Y. Kikumoto
DATE: 06/23/2016
CALIFORNIA BUILDING CODE

MASON WEST, INC.
1601 E. Miraloma Ave. Placentia, CA 92870
TEL (714) 630 - 0701, www.masonwest.com

Jiefu "Jeff" Zhang, SE
California SE No. S5270

PAGE
A1.3

DUCTWORK GENERAL NOTES (continued)

Notes on Seismic Brace Attachment to Building Structure:

1) Attachment methods and hardware (connectors) used for seismic bracing attachment to the building structural element is the critical factor in the design of seismic sway-bracing. Lightweight structures may limit the maximum spacing between seismic braces. The structural engineer of record shall determine the maximum allowable seismic loads that may be imposed on the building structure.

2) Attachment to different types of structures are addressed in these guidelines. Attachment types include reinforced normal or sand lightweight concrete (flat slabs, slabs poured in steel decking, walls or columns), fully grouted reinforced concrete masonry, hollow steel decking, steel framing, timber framing, and metal stud wall framing. Attachments may be made with pre- or post-installed concrete anchors, machine bolts, self-drilling and self-tapping screws, lag bolts, nails or in cases of steel on steel attachments, by arc-welding. Use of attachment methods not detailed in these guidelines must be engineered on an individual job basis subject to approval by the enforcement agency. Note: The structural engineer of record shall verify that attachment details specified by the RDP are in accordance with the design concept for the primary structure.

3) Expansion anchors shall be Hilti Kwik Bolt TZ, Powers Power-Stud+ SD1, Mason Ind. N.Y. SAS(E) or Powers Power-Stud+ SD2 for minimum 3000 psi concrete slabs, beams, or walls and concrete filled decks (sand light or normal weight) installed in accordance with ICC Reports ICC ESR 1917, 2818, 3037 or 2502, respectively. Hilti Kwik Bolt 3 expansion anchors shall be used to resist static and transient seismic tension and shear loads in uncracked, grout-filled concrete masonry. Expansion anchors designed to ICC-ES AC01 are limited to allowable stress design only in accordance with AC01 1.2. SEOR shall verify that: (1) masonry is not cracked as defined in ICC-ES AC01 Section 2.3; calculation required to show masonry wall would not crack under the design earthquake loads under all service load conditions; wall has to remain elastic; (2) masonry wall shall be fully grouted in accordance with ESR-1385 Section 3.2; (3) condition of use requirements in accordance with ESR-1385 Section 5.0 is satisfied. When expansion anchors are used, 50 percent of alternate bolts in a group shall be tension tested or torque tested per 2013 CBC Section 1913A.7. Testing shall be done in the presence of the special inspector and a report of the test results shall be submitted to the enforcement agency. If any anchors fail, test all previously untested anchors installed by the same trade until 20 consecutive anchors pass. Then resume the original test frequency. Refer to page A0.4 for test loads.

4) Concrete inserts shall be Mason West Type MW-PAL-A for installation in normal or sand lightweight concrete slabs or MW-CDI for installation in normal or sand lightweight concrete filled metal decks.

5) All welded attachments shall be minimum 70xx electrode welds. Minimum 60xx electrode welds may be used for steel thicknesses that are 12 gauge or less.

6) Metal decks for expansion anchor attachments and MW-CDI inserts shall be minimum 20 gauge with either a maximum 3 inch flute and minimum 1-1/2 inch cover or a maximum 1-1/2 inch flute and minimum 2-1/4 inch cover. Metal decks for MW-PAL-A insert shall be minimum 20 gauge with 3" flute and 3-1/4" cover. Refer to appropriate M2 and N2 pages for allowable deck anchor attachments. Concrete fill shall be minimum 3000 psi sand lightweight concrete. *Note:* Metal decks with minimum 3000 psi stone aggregate concrete fill may use the sand lightweight concrete deck charts.

7) Concrete attachments are based on specified anchor bolts or inserts. Substitution of alternate anchors must be approved by Mason West and the enforcement agency on a job by job basis.

8) When installing drilled-in anchors in existing non-prestressed reinforced concrete, use care and caution to avoid cutting or damaging reinforcing bars. When installing them in existing prestressed concrete, locate the prestressed tendons by using a non-destructive method and do not cut or damage the tendons during installation.

MASON WEST, INC.
1601 E. Miraloma Ave. Placentia, CA 92870
TEL (714) 630 - 0701, www.masonwest.com

Jiefu "Jeff" Zhang, SE
California SE No. S5270

PAGE
A1.4

DUCTWORK GENERAL NOTES (continued)

9) Attachments are provided for wide flange structural steel members, open web steel trusses as well as wood trusses, joists, and beams in Section N3.11-3.13, N4.10-4.13.

Notes on Suspended HVAC Ducts and Factory Built Vent Duct:

Note: Ductwork designed to carry toxic, highly toxic or flammable gases, or used for smoke control shall be designed and braced without considering the exceptions noted below.

1) Per 2013 CBC Sections 1616A.1.18 & 1616A.1.24, ASCE 7-10 Sections 13.1.4 and 13.6.7, design for the seismic forces are not required for HVAC Ductwork and Factory Built Vent Duct where any of the following are satisfied:
   a) The component is positively attached to the structure; and the project is designated as Seismic Design Categories D, E or F; flexible connections are provided between the duct and the component/equipment; and the duct weighs 5 lbs/ft or less; or
   b) Trapeze assemblies are used to support ductwork and the total weight of the ductwork supported by trapeze assemblies is less than 10 lbs/ft; or
   c) The ductwork is supported by hangers and each hanger in the duct run is 12" or less in length from the duct support point to the supporting structure (refer to Note 2 below for 12" Inch Rule). Where rod hangers are used with a diameter greater than 3/8", they shall be equipped with swivels, eye bolts or other devices to prevent inelastic bending of the rod; or
   d) Provisions are made to avoid impact with larger ducts or mechanical components or to protect the ducts in the event of such impact and the HVAC ducts or Factory Built Vent Ducts have a cross-sectional area of 6 ft^2 or less or weigh 10 lbs/ft or less.

   Note: Seismic Design Category and I_P can be found in the general notes of the structural drawings for a specific project under Design Criteria.

2) Section A4 of these guidelines details the "12 Inch Rule" exception described in Note 1c for Suspended HVAC Ducts and Factory Built Vent Duct.

3) Ductwork conforming to SMACNA standards, including but not limited to duct construction and joint connections, shall be braced at a maximum transverse and longitudinal brace spacing of 30 feet and 60 feet, respectively.

4) Rectangular and oval ductwork shall be supported at seismic brace locations with a trapeze support member sized to carry the gravity load of the ductwork; a minimum of (2) threaded vertical hanger rods. An upper support member over top of the duct is required when seismic bracing is attached to the top. The trapeze and upper support members must be fastened to the ductwork with sheet metal screws as detailed in Section D. Refer to Sections B and T for sizing of the trapeze and upper support members. Refer to installation pages for connection details from the ductwork to the trapeze members.

5) Multiple ducts may be combined in a single frame and braced based on the combined duct weight.

6) Wall penetrations may be considered transverse brace locations where duct is tightly blocked unless smoke dampers are installed in the wall, subject to approval by the SEOR.

7) Floor penetrations of vertical duct may be considered transverse and longitudinal brace locations where duct is tightly blocked, no smoke dampers are installed, and the distance from the floor penetration to the inside of the 90 degree turn horizontal is less than 2 feet.

MASON WEST, INC.
1601 E. Miraloma Ave. Placentia, CA 92870
TEL (714) 630 - 0701, www.masonwest.com

Jiefu "Jeff" Zhang, SE
California SE No. S5270

PAGE
A1.5

DUCTWORK GENERAL NOTES (continued)

8) Components or equipment that are installed in-line with the duct system and have an operating weight greater than 75 lbs such as fans, heat exchangers, humidifiers and VAV/CAV/ATU boxes, etc. shall be supported and laterally braced independent of the duct system. Unbraced piping attached to in-line components or equipment shall be provided with adequate flexibility (e.g. flexible connections or (3) 90 degree elbows) to accommodate the seismic relative displacements.

9) Components or equipment that are installed in-line with the duct system and have an operating weight of 75 lbs or less such as fans, heat exchangers, humidifiers and VAV/CAV/ATU boxes, etc. and are directly connected to the ductwork on each end (no flexible connections) may be considered part of the duct run and do not require independent support and seismic bracing if the weight of duct on each side of the component equals or exceeds the weight of the component; or if the duct is braced with the mass of the in-line component considered in the forces tributary to the adjacent braces. Unbraced piping attached to in-line components or equipment shall be provided with adequate flexibility (e.g. flexible connections or (3) 90 degree elbows) to accommodate the seismic relative displacements.

Note: If the in-line duct device requires special seismic certification or an OSHPD OSP, support and lateral bracing shall be provided as specified in the certification or OSP document, regardless of in-line duct device operating weight.

10) The appendix of this manual tabulates the duct weight per foot for rectangular and round ductwork of different sizes and gages.

11) If a 2 piece rod is used to support ductwork, minimum engagement of the rod in the coupling nut shall be equal to the rod diameter. Rods shall be run up tight in the coupling nut.

Notes on Vertical Risers:

1) Vertical ductwork systems supported at each floor shall be considered seismically braced if the penetration through each floor is tightly packed and the floor-to-floor spacing is not in excess of 30 feet. Tops of risers exceeding 3 feet shall be provided with a 4-way brace. Where the 4-way brace is attached on the horizontal ductwork, it shall be installed within 2 feet of the centerline of the riser.

2) Vertical duct risers in an open shaft must be attached to steel supports with both steel supports and connections sized to accept the combined gravity and seismic loads. Thermal loads shall be considered, where applicable. Lateral seismic restraint spacing shall not exceed 30 feet. Supports and connections must be engineered on a job by job basis subject to approval by the enforcement agency. Seismic relative displacement between floors shall be considered in the design.

REVIEWED FOR CODE COMPLIANCE
OSHPD
OPM-0043-13
DATE: 06/23/2016
CALIFORNIA BUILDING CODE 2013

MASON WEST, INC.
1601 E. Miraloma Ave. Placentia, CA 92870
TEL (714) 630 - 0701, www.masonwest.com

Jiefu "Jeff" Zhang, SE
California SE No. S5270

PAGE
A1.6

DUCTWORK DESIGN PROCEDURE

Follow the five steps below to determine the seismic kit installation, hanger and brace connection details that pertain to a specific suspended duct system. An example is provided on the following pages.

Step 1. **Determine 'g' Forces:**
Calculate the lateral acceleration, F_P, and vertical acceleration, F_{PV}, in terms of 'g' using the equations outlined on page A1.0 for each level of the building.

Step 2. **Determine Operating Weight (lbs/ft or lbs):**
Determine the operating weight, W_P, of the distribution system (lbs/ft) or component (lbs) to be seismically braced. Refer to the appendix for rectangular and round duct weights.

Step 3. **Determine Seismic Forces (lbs):**
Determine the maximum allowable brace spacings from page A1.5, note 3. *If you choose to use the pre-designed schedules in Section B, skip the remainder of this step.*
Calculate the maximum lateral and vertical forces applied to the seismic brace system. Resolve the maximum lateral force to the brace, F_P, and maximum load on the hanger rod, T_{Rod}.

The resultant compression load on the hanger rod at seismic brace locations may be calculated to determine if rod stiffening is required.

Step 4. **Select Seismic Kit Installation, Hanger and Brace connection Details:** Select the appropriate details from the schedules in Section B for rectangular, round or factory built vent duct based on maximum 'g' force, system weight per foot and maximum transverse, longitudinal and all directional brace spacing.

If you calculated the seismic forces in step 3, verify the details selected are correct by comparing the calculated lateral force, F_P, and load on the hanger rod, T_{Rod}, with the rated loads tabulated on the detail sheets. If F_P and T_{Rod} are less than or equal to the tabulated rated loads, the details are acceptable.

Step 5. **Select Trapeze Upper and Lower Members:**
Select the upper and lower trapeze members from the tables in Section B or T for transverse, longitudinal and all-directional seismic braces based on 'g' force and maximum span of trapeze member.

REVIEWED FOR CODE COMPLIANCE
OSHPD
OPM-0043-13
BY: Jeffrey Y. Kikumoto
DATE: 06/23/2016
CALIFORNIA BUILDING CODE, 2013

MASON WEST, INC.
1601 E. Miraloma Ave. Placentia, CA 92870
TEL (714) 630 - 0701, www.masonwest.com

Jiefu "Jeff" Zhang, SE
California SE No. S5270

PAGE
A2.0

DUCTWORK DESIGN PROCEDURE (continued)

Example:

70" x 48" x 18 gauge rectangular ductwork, constructed per SMACNA standards, is suspended within a 3 story poured-in place concrete building with basement. The ductwork is supported at every 8 feet. The elevation of each floor, including the basement, is 15 feet. The short period spectral acceleration, S_{DS}, listed on the contract structural drawings, is 1.02. The component importance factor, $I_P = 1.5$.

Note: When anchoring to concrete, allowable loads have been reduced by the concrete overstrength factor, Ωo, where applicable, in Sections M & N. Therefore, Ωo is not used when calculating applied seismic forces in this example.

Step 1. **Determine 'g' Forces**

Component amplification and response modification factors for suspended ductwork, constructed by means other than welding or brazing are as follows:

$a_P = 2.5$; $R_P = 6.0$

Therefore,

$$F_P = (0.7)\frac{0.4(2.5)(1.02)W_P}{(6.0)/(1.5)}(1+2\frac{z}{h}) = 0.18(1+2\frac{z}{h})g$$

$$F_{P(min)} = (0.7)(0.3)(1.02)(1.5)W_P = 0.32g$$

$$F_{P(max)} = (0.7)(1.6)(1.02)(1.5)W_P = 1.71g$$

$$F_{PV} = (0.7)(0.2)(1.02)W_P = 0.14g$$

Tabulated below are the 'g' forces for each level of the building

Floor Level	F_P	F_{PV}
Basement	0.32g	0.14g
1	0.32g	0.14g
2	0.42g	0.14g
3	0.54g	0.14g

Step 2. **Determine Operating Weight (lbs/ft):**

From page APP1.3, the operating weight of an 70" x 48" x 18 gauge rectangular ductwork is 45.4 lbs/ft.

REVIEWED FOR CODE COMPLIANCE
CALIFORNIA BUILDING CODE, 2013
OPM-0043-13
BY: Jeffrey Y. Kikumoto
DATE: 06/23/2016

MASON WEST, INC.
1601 E. Miraloma Ave. Placentia, CA 92870
TEL (714) 630 - 0701, www.masonwest.com

Jiefu "Jeff" Zhang, SE
California SE No. S5270

PAGE
A2.1

DUCTWORK DESIGN PROCEDURE (continued)

Step 3. **Determine Seismic Forces (lbs):**

From page A1.5 Note 3, the maximum transverse and longitudinal brace spacing for suspended ductwork (constructed of ductile materials with ductile connections) is 30 feet and 60 feet, respectively, for all levels.

Note: At this point, you have the option to calculate the seismic forces and loads on the hanger rods and complete this step or move on to step 4.

For Basement Level and Level 1,

F_P (Transverse) = 0.32 x 45.4 lbs/ft x 30 ft brace spacing = 436 lbs
F_P (Longitudinal) = 0.32 x 45.4 lbs/ft x 60 ft brace spacing = 872 lbs
F_{PV} = 0.14 x 45.4 lbs/ft x 8 ft support spacing = 51 lbs

Note: Fp does not need to be increased due to installation tolerances indicated in assembly details.

For seismic solid brace installations:

$T_{Rod} = F_P \tan(\text{brace angle}) + (45.4 \text{ lbs/ft} \times 8 \text{ ft} + F_{PV})/2 = 643$ lbs.

Note: Brace angle = 45 degrees for this example. Longitudinal loads considered split evenly to each rod.

For seismic cable brace installations:

$T_{Rod} = (45.4 \text{ lbs/ft} \times 8 \text{ ft} + F_{PV})/2 = 207$ lbs.

Note: In both seismic solid and cable brace T_{Rod} calculations, the gravity loads are assumed to be evenly distributed to each hanger. If this is not the case, make the necessary adjustment.

Similarly for Levels 2 and 3, F_P, F_{PV} and T_{Rod} are as tabulated below.

Floor Level	F_P	F_{PV}	T_{Rod}(Solid)	T_{Rod}(Cable)
Basement	436 lbs	51 lbs	643 lbs	207 lbs
1	436 lbs	51 lbs	643 lbs	207 lbs
2	572 lbs	51 lbs	779 lbs	207 lbs
3	735 lbs	51 lbs	942 lbs	207 lbs

$C_{Rod} = F_P \tan(\text{brace angle}) + F_{PV} - 0.9Wp$
$= 436 \text{ lbs} \times \tan(45 \text{ degrees}) + 51 \text{ lbs}/2 - 0.9 \times (45.4 \text{ lbs/ft} \times 8 \text{ ft})/2 = 298$ lbs.

Note: If $C_{Rod} \leq 0$, rod stiffeners are not required.

REVIEWED FOR CODE COMPLIANCE
osHpd
OPM-0043-13
BY: Jeffrey Y. Kikumoto
DATE 06/23/2016
CALIFORNIA BUILDING CODE

MASON WEST, INC.
1601 E. Miraloma Ave. Placentia, CA 92870
TEL (714) 630 - 0701, www.masonwest.com

Jiefu "Jeff" Zhang, SE
California SE No. S5270

PAGE
A2.2

DUCTWORK DESIGN PROCEDURE (continued)

Step 4. **Select Seismic Kit Installation, Hanger and Brace connection Details:**

For rectangular duct with operating weight of 45.4 lbs/ft, acceptable seismic kit installation, hanger and connection details from the charts in Section B for each level of the building are as tabulated below.

Seismic Solid (Rigid) Brace, Hanger and Brace connection Details

Floor Level	Fp	Section B Page	Tran/Long Spacing	Kit Installation Details			Trans./ Long. Hanger Conn. Desig.	All Dir. Hanger Conn. Desig.	Brace Conn. Desig.
				Transverse	Longitudinal	All-Directional			
Basement	0.32g	B2.1	30'/60'	D1.33	D1.34	N/A	63L	N/A	63J
1	0.32g	B2.1	30'/60'	D1.33	D1.34	N/A	63L	N/A	63J
2	0.42g	B2.1	30'/60'	D1.33	D1.34	N/A	63L	N/A	63J
3	0.54g	B2.2	20'/40'	D1.33	D1.34	D1.32	63M	63P	63L

Seismic Cable (Standard) Brace, Hanger and Brace connection Details

Floor Level	Fp	Section B Page	Tran/Long Spacing	Kit Installation Details			Hanger Conn. Desig.	Brace Conn. Desig.
				Transverse	Longitudinal	All-Directional		
Basement	0.32g	B2.4	20'/40'	D4.20	D4.21	D4.22	50E	50G
1	0.32g	B2.4	20'/40'	D4.20	D4.21	D4.22	50E	50G
2	0.42g	B2.4	20'/40'	D4.20	D4.21	D4.22	50E	50G
3	0.54g	B2.5	8'/16'	D4.20	D4.21	D4.22	50E	50F

For calculated F_P and T_{Rod} select the appropriate details in Sections D, M and N by comparing the calculated values with the tabulated values indicated on each detail.

Step 5. **Select Trapeze Upper and Lower Members:**

For a rectangular duct weighing 45.4 lbs/ft supported by a trapeze member with a maximum span between hanger rods of 78 in. and the seismic accelerations calculated in step 2, go to the tables in Section T1 to find the allowable trapeze members for transverse, longitudinal and all-directional seismic braces for each level of the building. For transverse brace spacing of 30 feet and longitudinal/all-directional brace spacing of 60 feet:

Trapeze Upper Member at Longitudinal and All-Directional Brace Locations

Floor Level	Fp	Section T Page	Longitudinal	All-Directional
Basement	0.32g	T1.2	3-1/4" Single Strut	3-1/4" Single Strut
1	0.32g	T1.2	3-1/4" Single Strut	3-1/4" Single Strut
2	0.42g	T1.3	3-1/4" Single Strut	3-1/4" Single Strut
3	0.54g	T1.4	3-1/4" Single Strut	3-1/4" Single Strut

Refer to page T1.0 for trapeze upper member at transverse brace locations and trapeze lower member at all brace locations; for these cases, trapeze member to be 1-5/8" Single Strut.

MASON WEST, INC.
1601 E. Miraloma Ave. Placentia, CA 92870
TEL (714) 630 - 0701, www.masonwest.com

Jiefu "Jeff" Zhang, SE
California SE No. S5270

PAGE
A2.3

REVIEWED FOR CODE COMPLIANCE
OSHPD
OPM-0043-13
06/23/2016
CALIFORNIA BUILDING CODE, 2013

LAYOUT OF SEISMIC BRACES FOR DUCTWORK

Step 1. Separate the layout of the system into individual straight runs. A straight run is defined as a section of the utility between changes in direction. If an offset(s) occurs between changes of direction it may be neglected if the distance perpendicular to the run is less than 2 feet.

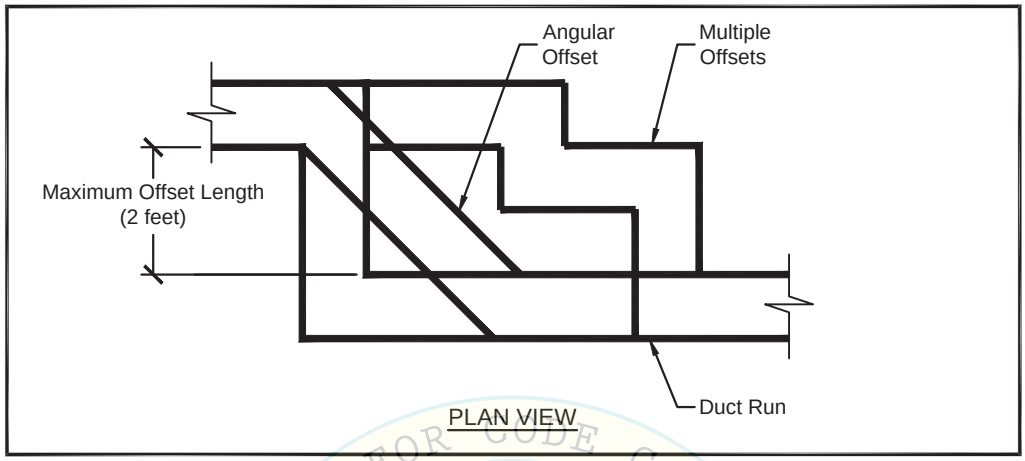

Step 2. Each straight run must be braced in the transverse direction (perpendicular to the run) at each end.

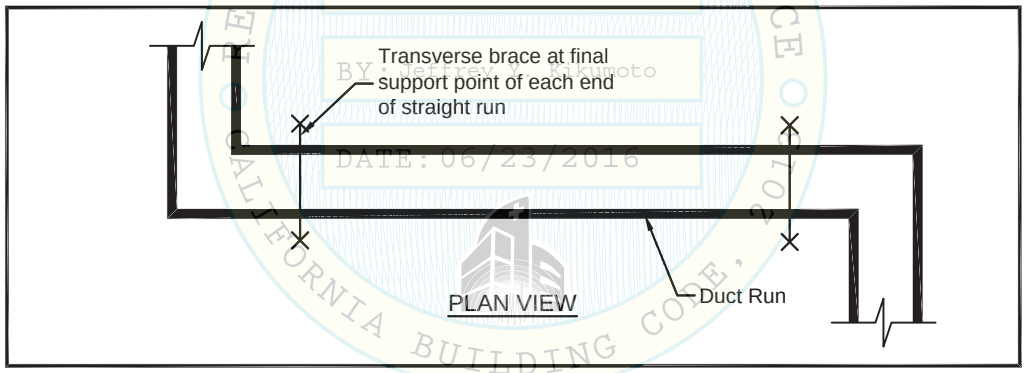

REVIEWED FOR CODE COMPLIANCE OF 2013 CALIFORNIA BUILDING CODE
OPM-0043-13
BY: Jeffrey Kikumoto
DATE: 06/23/2016

MASON WEST, INC.
1601 E. Miraloma Ave. Placentia, CA 92870
TEL (714) 630 - 0701, www.masonwest.com

Jiefu "Jeff" Zhang, SE
California SE No. S5270

PAGE
A3.0

LAYOUT OF SEISMIC BRACES FOR DUCTWORK (continued)

Step 3. Add transverse braces, if required, to limit the spacing(s) to the maximum spacing indicated in Section A.

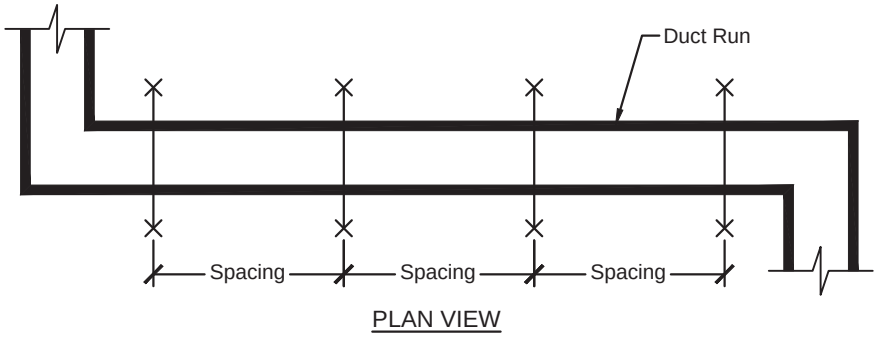

PLAN VIEW

Spacing ≤ **Maximum transverse brace spacing**

Step 4. Each straight run must be braced in the longitudinal direction (parallel to the run) with at least one brace. Transverse braces within the maximum offset length discussed in Step 1 may be used in addition to or in lieu of independent longitudinal braces. The length of duct around a 90 degree turn (indicated as 'P' below) longitudinally braced from a transverse brace = L-0.5T-A, where:

L = Maximum Allowable Longitudinal Brace spacing (From Section A)
T = The distance between Transverse Braces
A = Offset Length ≤ 2 feet

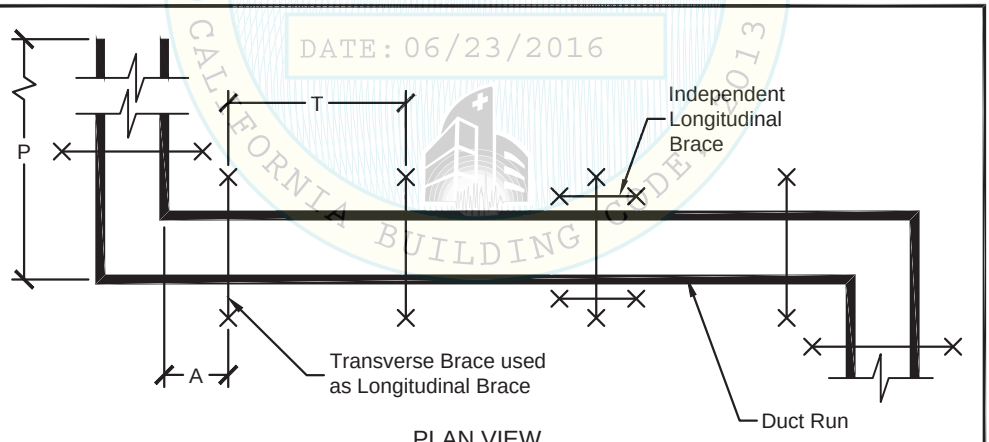

PLAN VIEW

CALIFORNIA BUILDING CODE 2013
OPM-0043-13
BY: Jeffrey Y. Kikumoto
DATE: 06/23/2016

MASON WEST, INC.
1601 E. Miraloma Ave. Placentia, CA 92870
TEL (714) 630 - 0701, www.masonwest.com

Jiefu "Jeff" Zhang, SE
California SE No. S5270

PAGE
A3.1

LAYOUT OF SEISMIC BRACES FOR DUCTWORK (continued)

Step 5. Multiple changes in direction may be treated as one complete system. Straight runs greater than the maximum offset length require 2 transverse braces. Straight runs less than the maximum offset length may require as few as one or no braces. (See layout below)

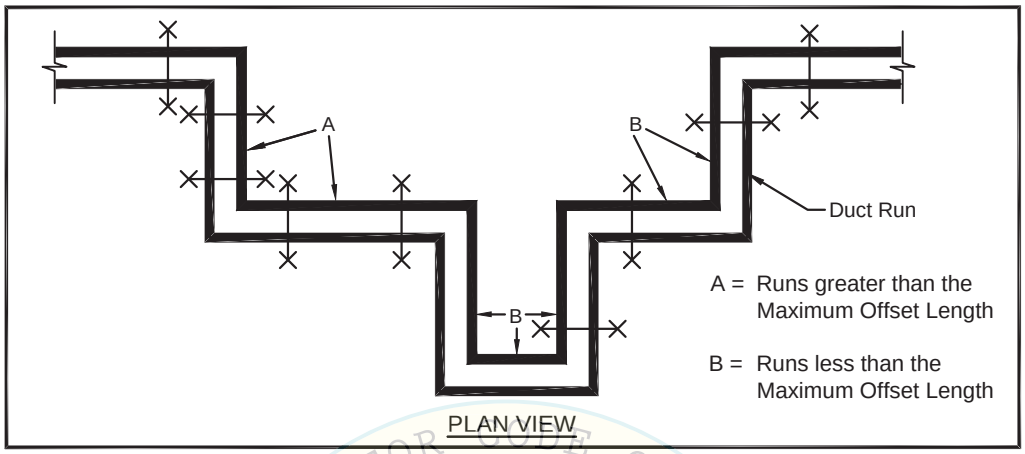

Step 6. Vertical drops to equipment must be restrained with a transverse brace at the final support point before the vertical drop. The distance from the transverse brace to the drop must be within the maximum offset length of the system. The maximum allowable length of the system braced from the transverse brace to the flexible connector is equal to ½ of the maximum transverse brace spacing indicated in Section A. If this distance is greater than ½ of the maximum transverse brace spacing, an additional brace is required at the end of the vertical drop by attaching to the floor. Consideration must be given to seismic relative displacements(SRD) imposed on duct when braced to the floor.

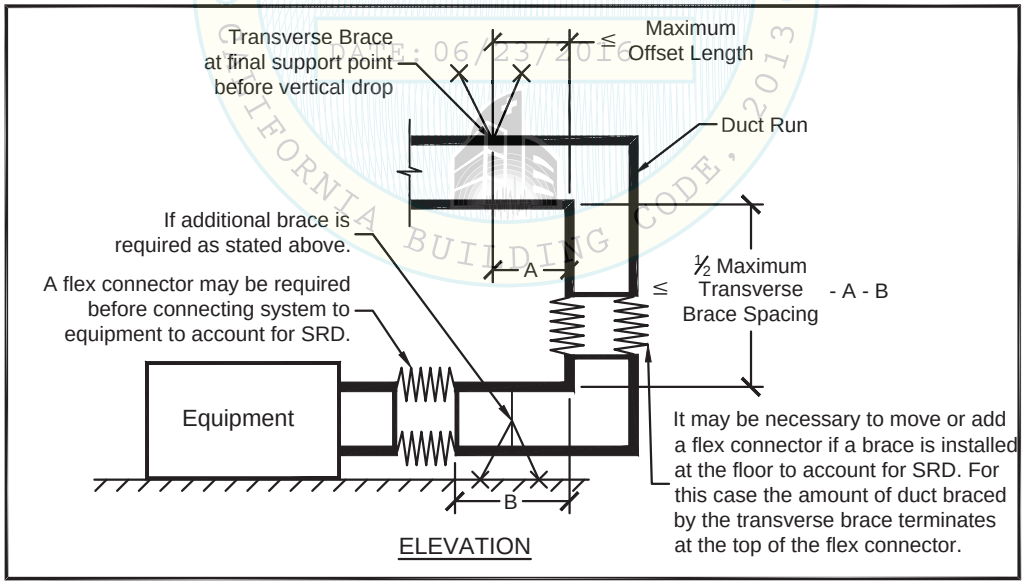

OSHPD PREAPPROVED
OPM-0043-13
Reviewed for Code Compliance
DATE: 06/23/2016
CALIFORNIA BUILDING CODE, 2013

MASON WEST, INC.
1601 E. Miraloma Ave. Placentia, CA 92870
TEL (714) 630 - 0701, www.masonwest.com

Jiefu "Jeff" Zhang, SE
California SE No. S5270

PAGE
A3.2

12" RULE FOR SUSPENDED DUCTWORK

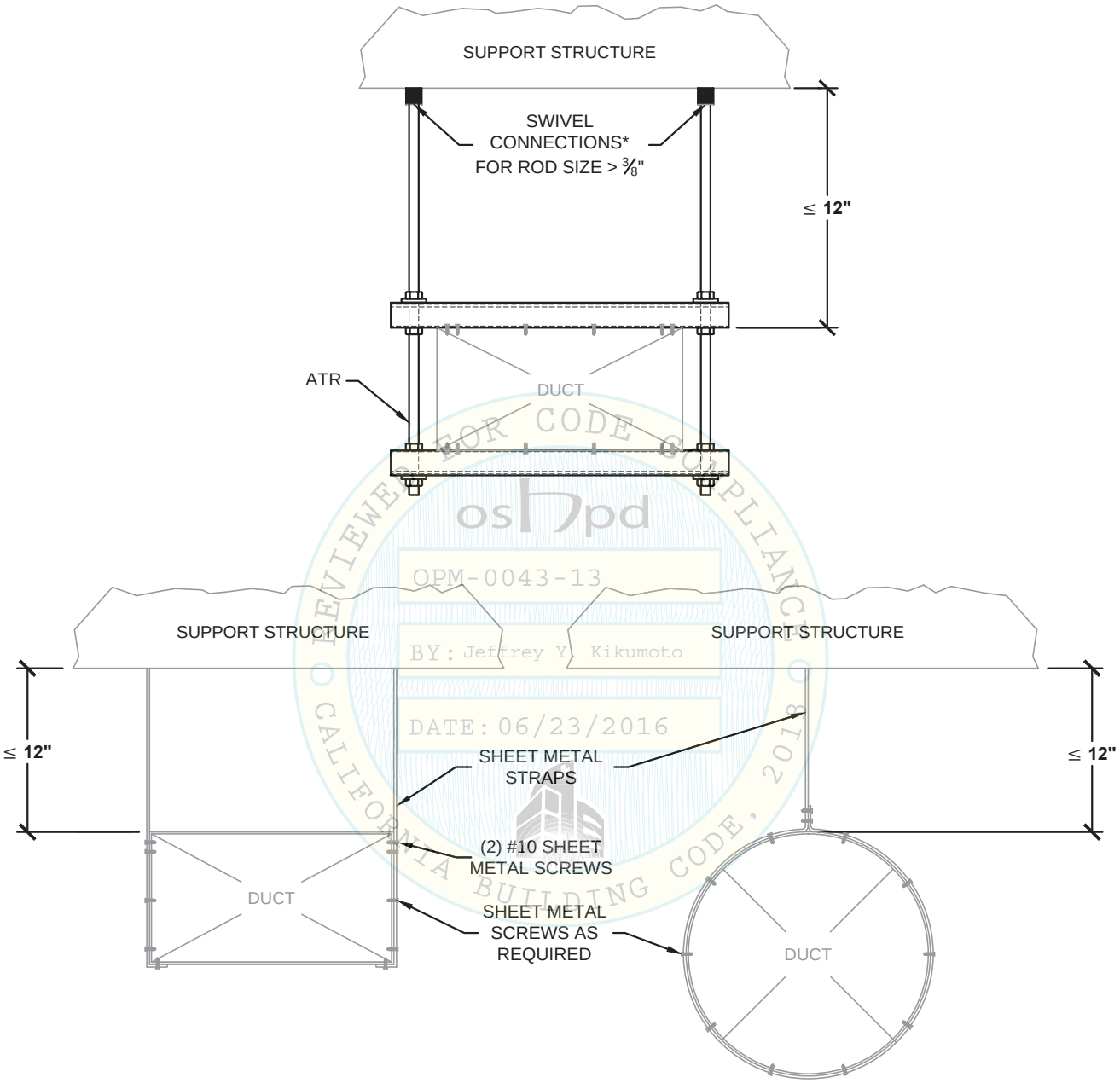

REVIEWED FOR CODE COMPLIANCE
osHpd
OPM-0043-13
BY: Jeffrey Y. Kikumoto
DATE: 06/23/2016
CALIFORNIA BUILDING CODE, 2013

*NOTE: CONNECTIONS COMPLYING INCLUDE SWIVEL JOINTS, EYE BOLTS, ETC.

MASON WEST, INC.
1601 E. Miraloma Ave. Placentia, CA 92870
TEL (714) 630 - 0701, www.masonwest.com

Jiefu "Jeff" Zhang, SE
California SE No. S5270

PAGE
A4.0

TRANSVERSE BRACE ALLOWABLE ANGLE VARIATIONS IN PLAN FOR DUCTWORK

THE ANGLE VARIATION MAY INCREASE BEYOND 2.5 DEGREES UP TO 15 DEGREES PROVIDED THE TRANSVERSE BRACES ARE SKEWED IN THE SAME DIRECTION AND A LONGITUDINAL BRACE OCCURS OPPOSITE THE SKEWED ANGLE DIRECTION AS SHOWN BELOW.

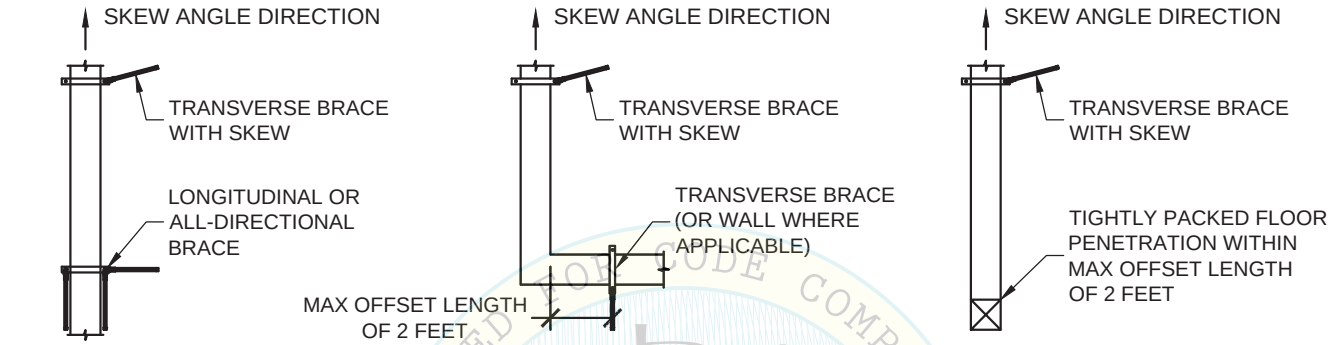

SOLID BRACE

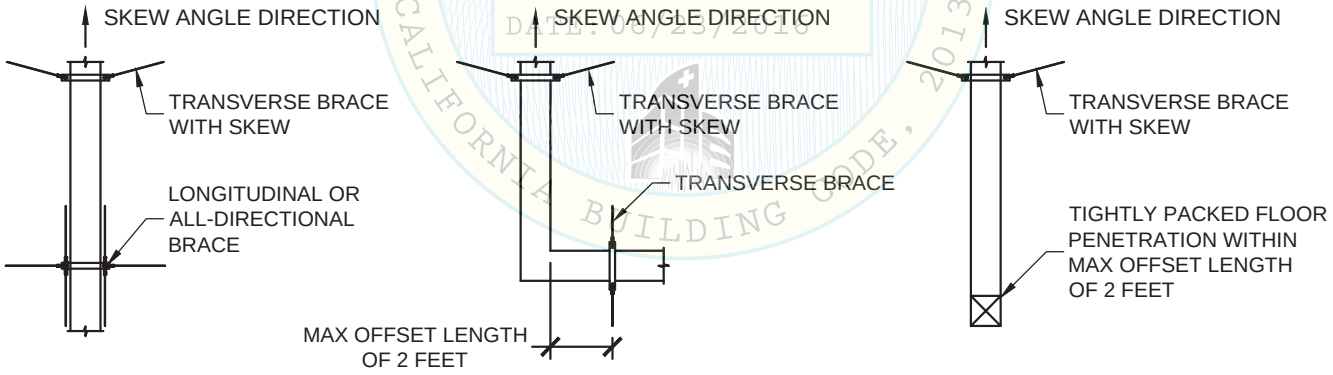

CABLE BRACE

NOTE: ANY OR ALL BRACE LOCATIONS ARE PERMITTED TO USE THE ANGLE VARIATION TO MEET FIELD CONDITIONS.

REVIEWED FOR CODE COMPLIANCE
CALIFORNIA BUILDING CODE, 2013
OSHPD
OPM 0043-13
BY: Jeffrey Y. Kikumoto
DATE: 06/23/2016

MASON WEST, INC.
1601 E. Miraloma Ave. Placentia, CA 92870
TEL (714) 630 - 0701, www.masonwest.com

Jiefu "Jeff" Zhang, SE
California SE No. S5270

PAGE
A5.0

ALTERNATE ARRANGEMENT OF SEISMIC BRACES FOR DUCTWORK, IN-LINE DEVICES, AND SUSPENDED EQUIPMENT

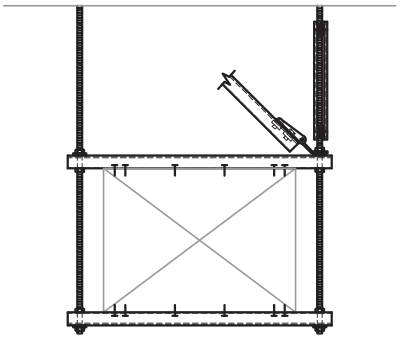

ELEVATION VIEW
SOLID BRACE INSTALLED
IN-BETWEEN HANGERS
(TRANSVERSE OR
ALL-DIRECTIONAL BRACE)

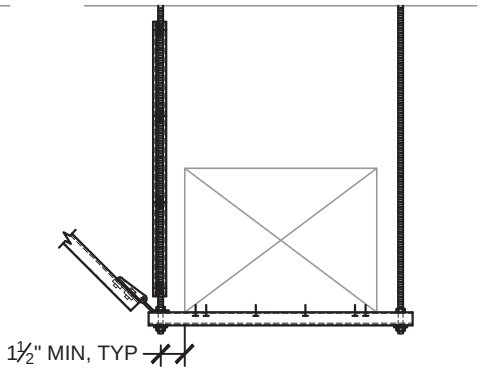

ELEVATION VIEW
SOLID BRACE INSTALLED AT
BOTTOM TRAPEZE
(TRANSVERSE BRACE ONLY)

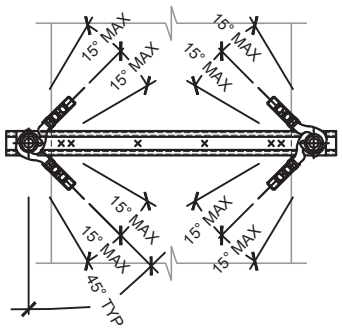

PLAN VIEW
CABLE X-PATTERN BRACE INSTALLED
IN-BETWEEN HANGERS

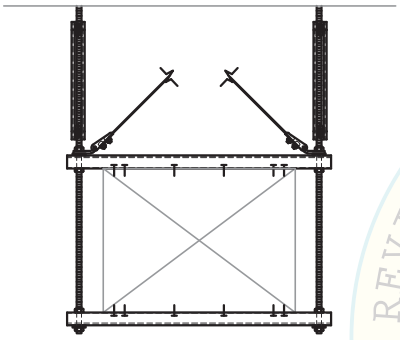

ELEVATION VIEW
CABLE BRACE INSTALLED
IN-BETWEEN HANGERS

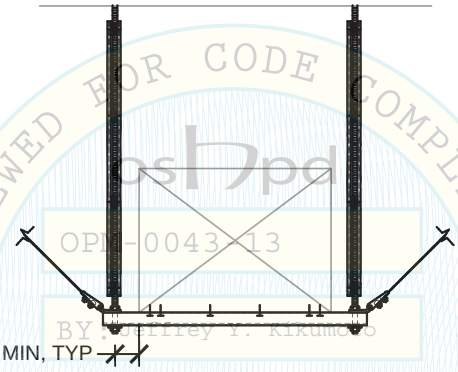

ELEVATION VIEW
CABLE BRACE INSTALLED AT
BOTTOM TRAPEZE
(TRANSVERSE BRACE ONLY)

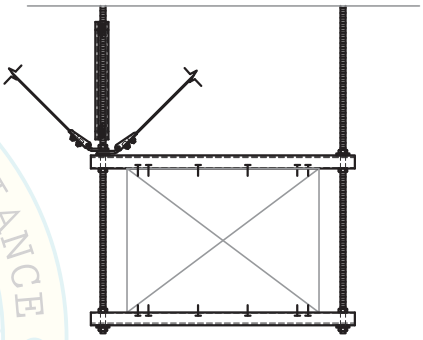

ELEVATION VIEW
CABLE BRACE INSTALLED AT
SINGLE HANGER
(TRANSVERSE BRACES ONLY)

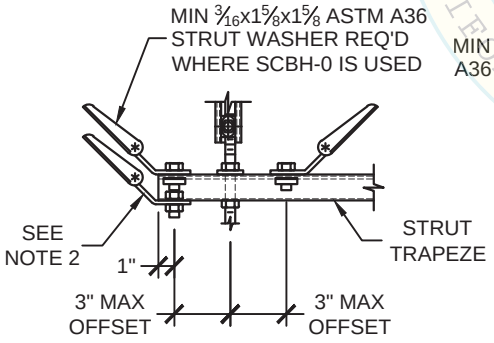

(TRANSVERSE
BRACE ONLY)

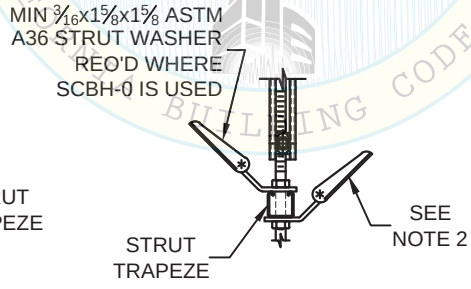

(LONGITUDINAL OR
ALL-DIRECTIONAL BRACE)

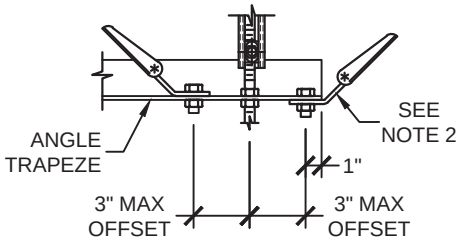

(TRANSVERSE, LONGITUDINAL
OR ALL-DIRECTIONAL BRACE)

SEISMIC BRACE BRACKET OFFSET FROM HANGER RODS

NOTES:
1) REFER TO APPROPRIATE DETAIL D PAGES FOR DIMENSIONS AND NOTATIONS NOT SHOWN.
2) WHEN INSTALLING SHB TO BOTTOM OF TRAPEZE, MW-KY SHB KEY IS REQ'D (REF. X2.4).

REVIEWED FOR CODE COMPLIANCE
CALIFORNIA BUILDING CODE, 2013
OPM-0043-13
BY: Jeffrey T. Kikumoto
DATE: 06/23/2016

MASON WEST, INC.
1601 E. Miraloma Ave. Placentia, CA 92870
TEL (714) 630 - 0701, www.masonwest.com

Jiefu "Jeff" Zhang, SE
California SE No. S5270

PAGE
A6.0

ALTERNATE ARRANGEMENT OF SEISMIC BRACES FOR DUCTWORK, IN-LINE DEVICES, AND SUSPENDED EQUIPMENT

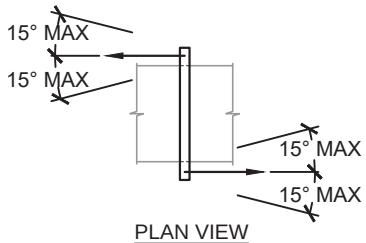

PLAN VIEW
LONGITUDINAL SOLID BRACES
INSTALLED IN ALTERNATING DIRECTIONS

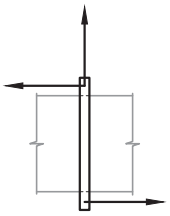

PLAN VIEW
ALL-DIRECTIONAL SOLID BRACES
INSTALLED IN ALTERNATING DIRECTIONS

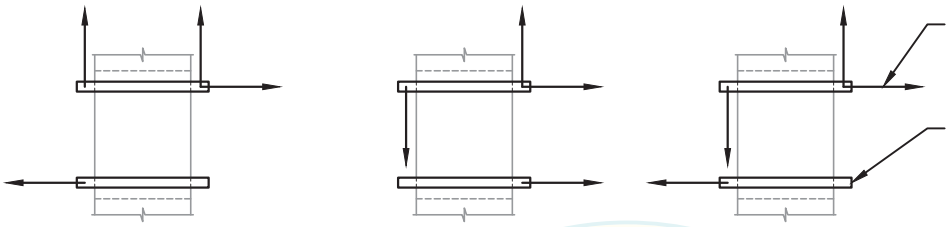

PLAN VIEW
ALL-DIRECTIONAL SOLID BRACES INSTALLED IN ALTERNATING DIRECTIONS

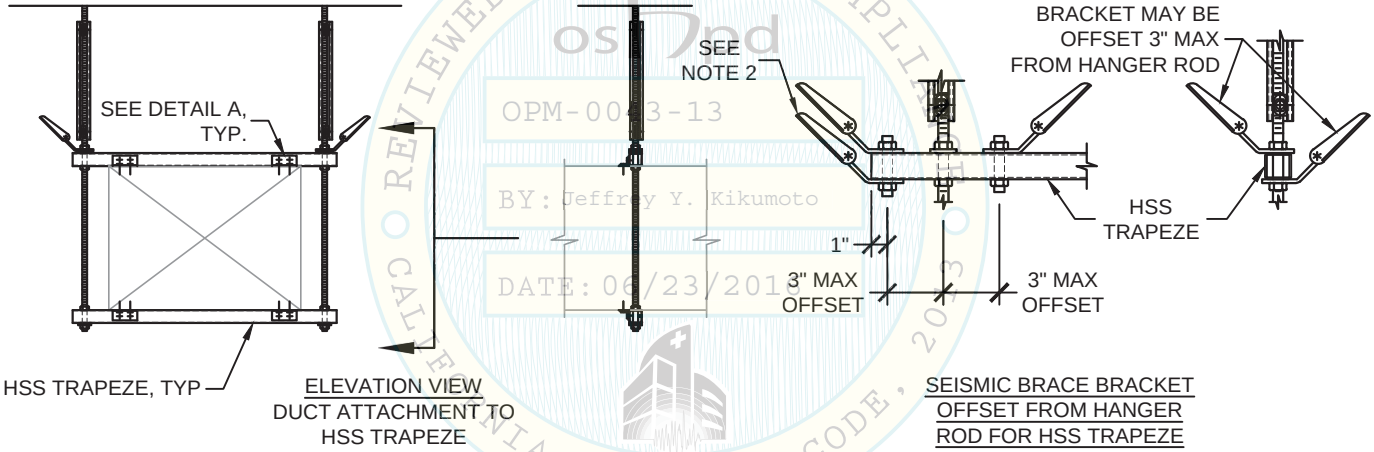

ELEVATION VIEW
DUCT ATTACHMENT TO HSS TRAPEZE

SEISMIC BRACE BRACKET OFFSET FROM HANGER ROD FOR HSS TRAPEZE

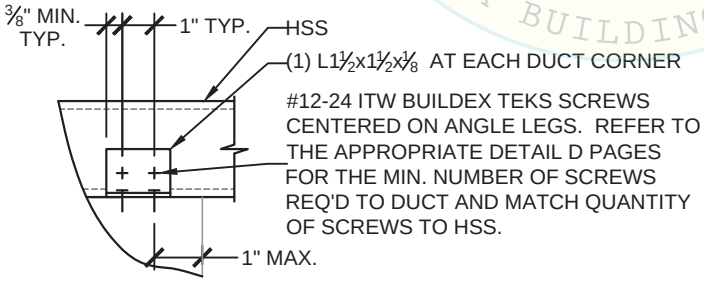

DETAIL A

NOTES:
1) REFER TO APPROPRIATE DETAIL D PAGES FOR DIMENSIONS AND NOTATIONS NOT SHOWN.
2) WHEN INSTALLING SHB TO BOTTOM OF TRAPEZE, MW-KY SHB KEY IS REQ'D (REF. X2.4).
3) ALLOWABLE ANGLE RANGES ARE TYPICAL FOR ALL ARRANGEMENTS OF SEISMIC BRACES.

REVIEWED FOR CODE COMPLIANCE - CALIFORNIA BUILDING CODE, 2013
OPM-0043-13
BY: Jeffrey Y. Kikumoto
DATE: 06/23/2016

MASON WEST, INC.
1601 E. Miraloma Ave. Placentia, CA 92870
TEL (714) 630 - 0701, www.masonwest.com

Jiefu "Jeff" Zhang, SE
California SE No. S5270

PAGE
A6.1

ALTERNATE ARRANGEMENT OF SEISMIC BRACES FOR DUCTWORK, IN-LINE DEVICES, AND SUSPENDED EQUIPMENT

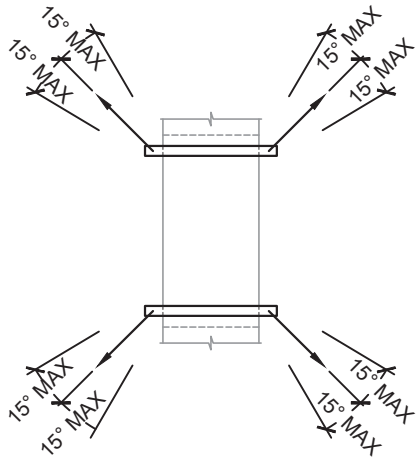

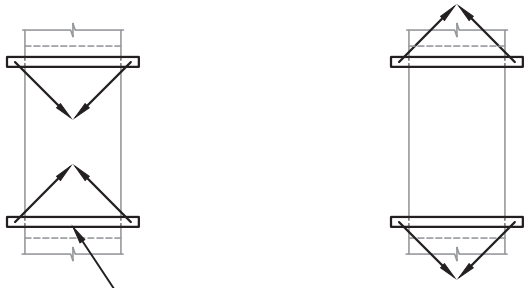

TRAPEZE MEMBERS MAY NOT BE NECESSARY. REFER TO APPROPRIATE D PAGES FOR BALANCE OF INFORMATION, TYP.

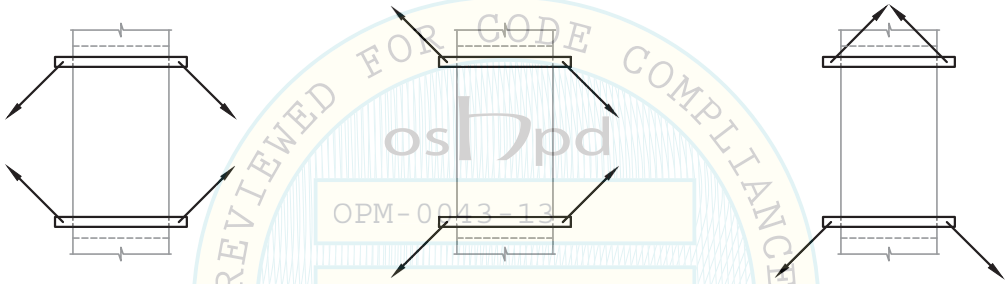

PLAN VIEW
SPLIT X-PATTERN CABLE BRACING INSTALLED IN ALTERNATING DIRECTIONS

REVIEWED FOR CODE COMPLIANCE
CALIFORNIA BUILDING CODE 2013
OPM-0043-13
BY: Jeffrey Y. Kikumoto
DATE: 06/23/2016

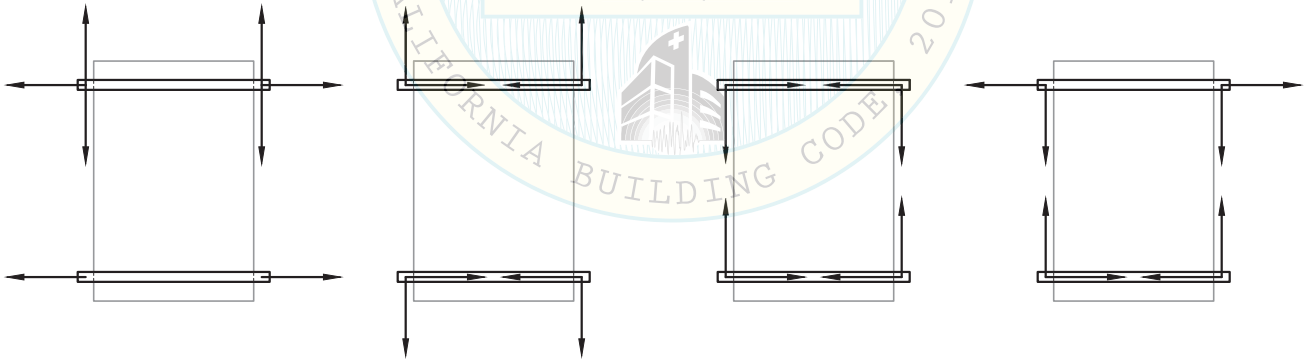

PLAN VIEW
CABLE BRACING INSTALLED IN ALTERNATING DIRECTIONS

NOTES:
1) REFER TO APPROPRIATE DETAIL D PAGES FOR DIMENSIONS AND NOTATIONS NOT SHOWN.
2) ALLOWABLE ANGLE RANGES ARE TYPICAL FOR ALL ARRANGEMENTS OF SEISMIC BRACES.
3) RESULTANT FORCE SHALL NOT MEET AT A SINGLE POINT TO PREVENT ROTATION AT THE CENTER OF GRAVITY.

MASON WEST, INC.
1601 E. Miraloma Ave. Placentia, CA 92870
TEL (714) 630 - 0701, www.masonwest.com

Jiefu "Jeff" Zhang, SE
California SE No. S5270

PAGE
A6.2

SEISMIC SOLID BRACING OFF STRUT HANGER TRANSVERSE OPTION FOR SUSPENDED DUCTWORK

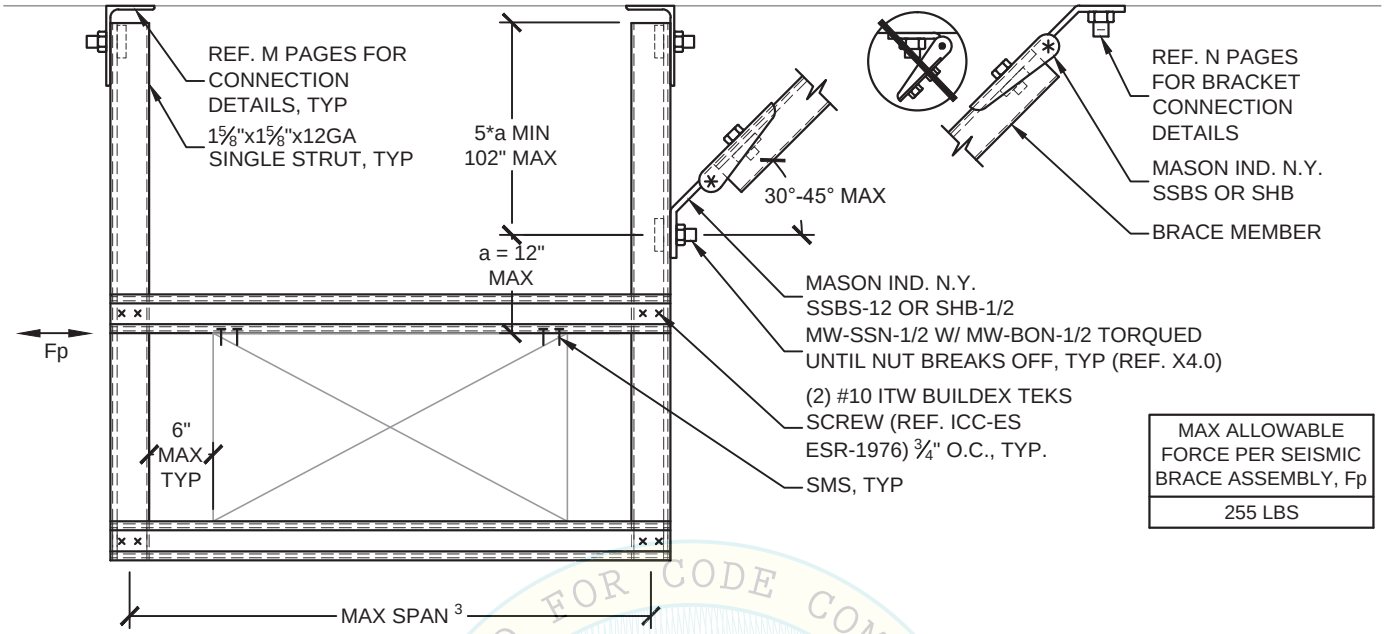

MAX ALLOWABLE FORCE PER SEISMIC BRACE ASSEMBLY, Fp
255 LBS

SINGLE STRUT OPTION

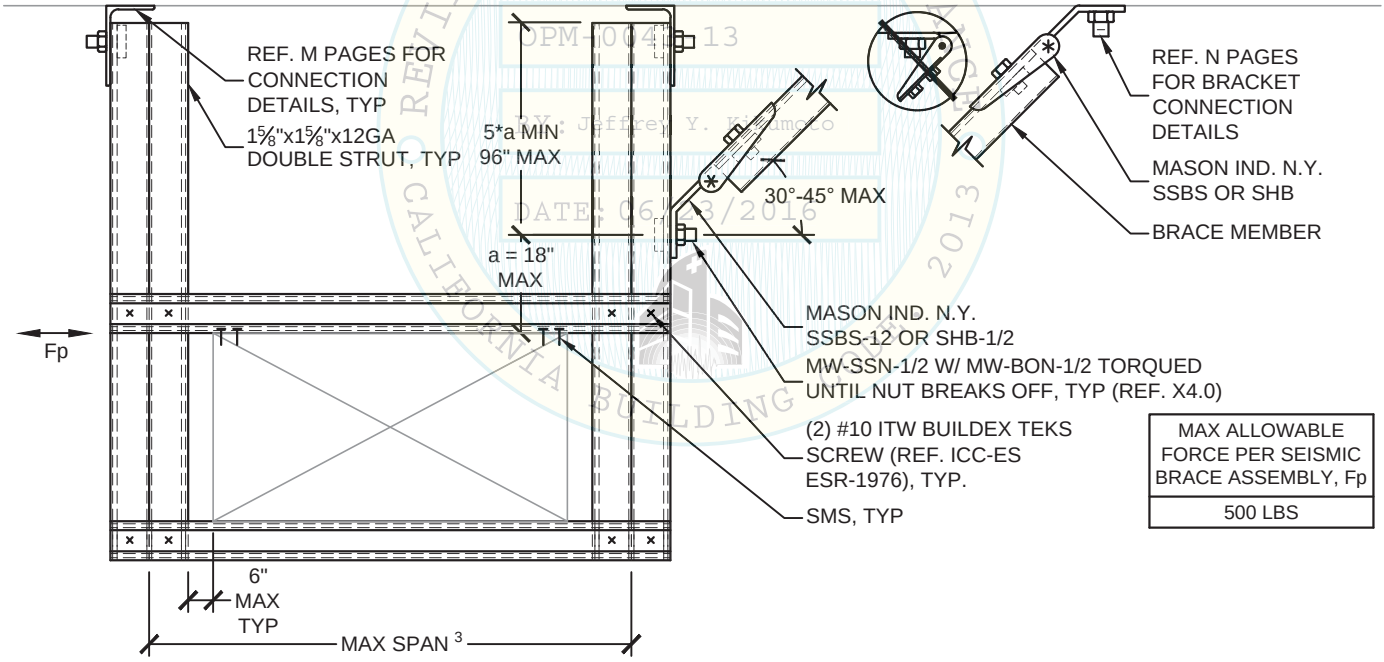

MAX ALLOWABLE FORCE PER SEISMIC BRACE ASSEMBLY, Fp
500 LBS

DOUBLE STRUT OPTION

NOTES:

1) REFER TO APPROPRIATE D PAGES FOR DIMENSIONS AND ANNOTATIONS NOT SHOWN.
2) SINGLE STRUT AND DOUBLE STRUT OPTIONS MAY CARRY UP TO A MAXIMUM OF 30LBS/FT OR 60LBS/FT, RESPECTIVELY.
3) REFER TO T PAGES FOR TRAPEZE SELECTION FOR MAX STRUT SPAN.

MASON WEST, INC.
1601 E. Miraloma Ave. Placentia, CA 92870
TEL (714) 630 - 0701, www.masonwest.com

Jiefu "Jeff" Zhang, SE
California SE No. S5270

PAGE
A7.0

OPM-0043-13 REVIEWED FOR CODE COMPLIANCE BY: Jeffrey Y. Kikumoto DATE: 06/23/2016 CALIFORNIA BUILDING CODE 2013

SEISMIC SOLID BRACING OFF STRUT HANGER LONGITUDINAL OPTION FOR SUSPENDED DUCTWORK

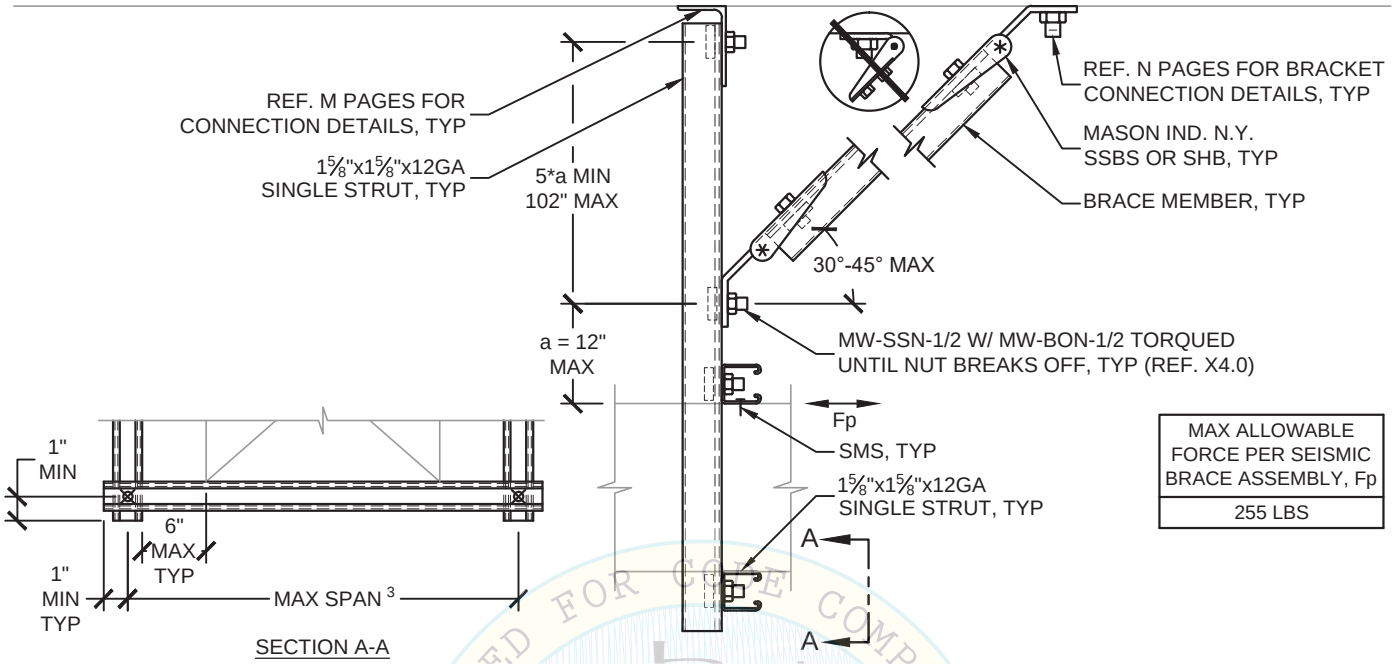

MAX ALLOWABLE FORCE PER SEISMIC BRACE ASSEMBLY, Fp
255 LBS

SINGLE STRUT OPTION

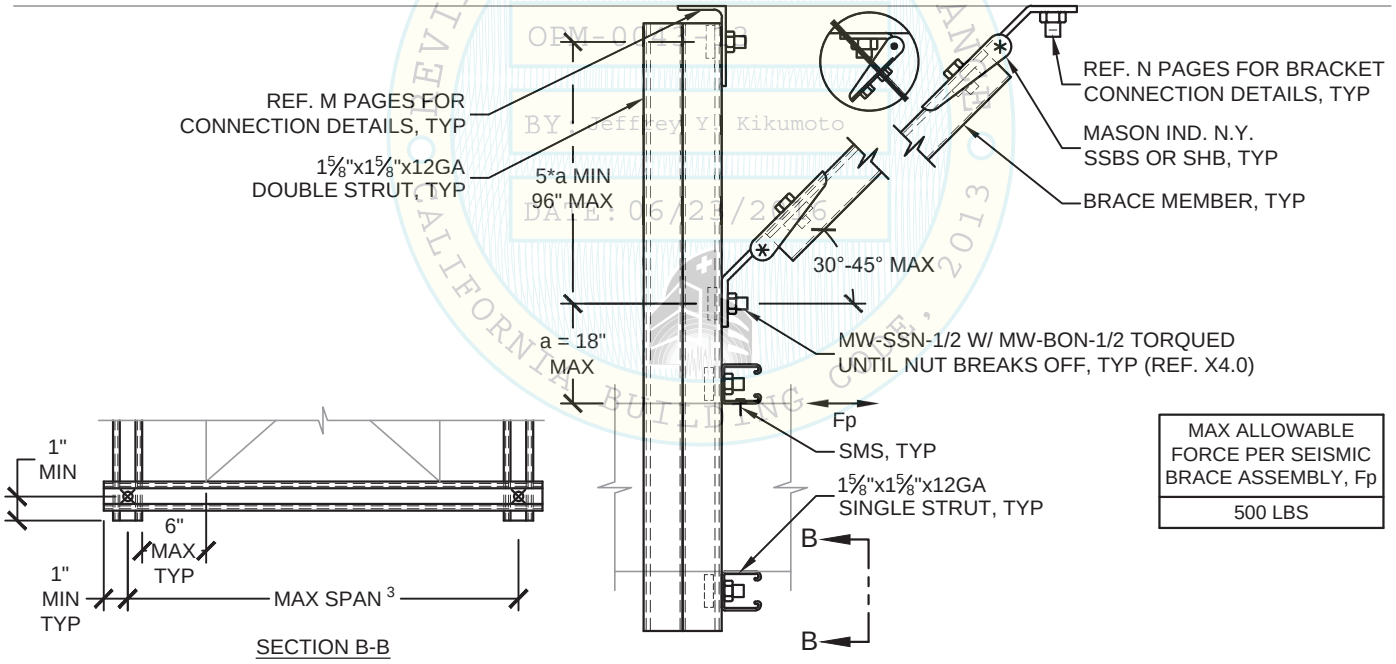

MAX ALLOWABLE FORCE PER SEISMIC BRACE ASSEMBLY, Fp
500 LBS

DOUBLE STRUT OPTION

NOTES:
1) REFER TO APPROPRIATE D PAGES FOR DIMENSIONS AND ANNOTATIONS NOT SHOWN.
2) SINGLE STRUT AND DOUBLE STRUT OPTIONS MAY CARRY UP TO A MAXIMUM OF 30LBS/FT OR 60LBS/FT, RESPECTIVELY.
3) REFER TO T PAGES FOR TRAPEZE SELECTION FOR MAX STRUT SPAN.

MASON WEST, INC.
1601 E. Miraloma Ave. Placentia, CA 92870
TEL (714) 630 - 0701, www.masonwest.com

Jiefu "Jeff" Zhang, SE
California SE No. S5270

PAGE
A7.1

OSHPD OPM-0043-13 REVIEWED FOR CODE COMPLIANCE BY Jeffrey Y. Kikumoto DATE: 06/23/2016 OSHPD CALIFORNIA BUILDING CODE, 2013

SEISMIC CABLE BRACING OFF STRUT HANGER TRANSVERSE OPTION FOR SUSPENDED DUCTWORK

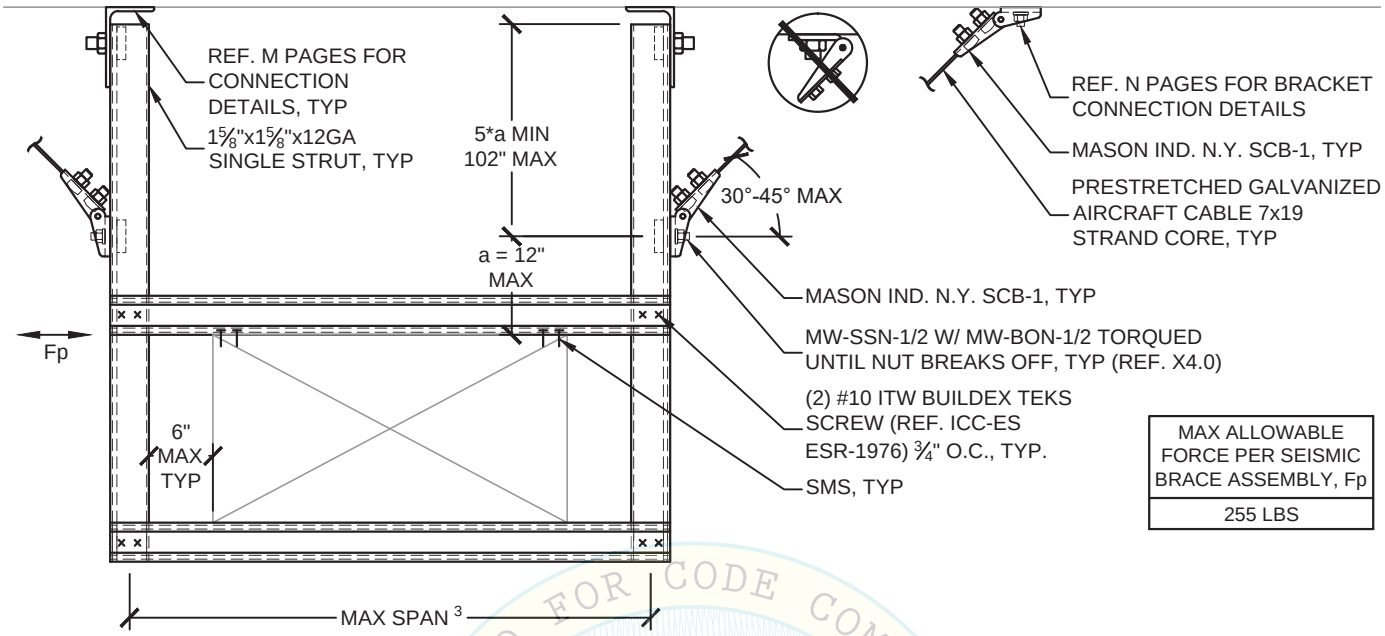

MAX ALLOWABLE FORCE PER SEISMIC BRACE ASSEMBLY, Fp
255 LBS

SINGLE STRUT OPTION

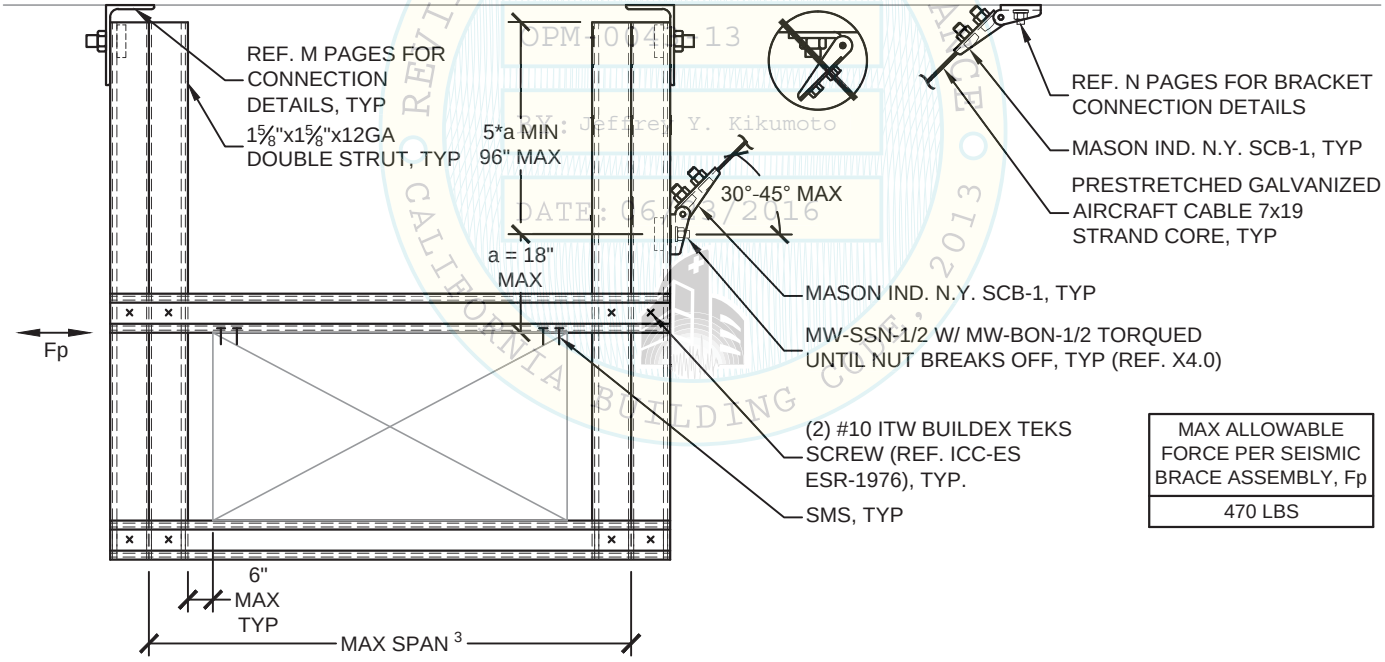

MAX ALLOWABLE FORCE PER SEISMIC BRACE ASSEMBLY, Fp
470 LBS

DOUBLE STRUT OPTION

NOTES:
1) REFER TO APPROPRIATE D PAGES FOR DIMENSIONS AND ANNOTATIONS NOT SHOWN.
2) SINGLE STRUT AND DOUBLE STRUT OPTIONS MAY CARRY UP TO A MAXIMUM OF 30LBS/FT OR 60LBS/FT, RESPECTIVELY.
3) REFER TO T PAGES FOR TRAPEZE SELECTION FOR MAX STRUT SPAN.

MASON WEST, INC.
1601 E. Miraloma Ave. Placentia, CA 92870
TEL (714) 630 - 0701, www.masonwest.com

Jiefu "Jeff" Zhang, SE
California SE No. S5270

PAGE
A7.2

REVIEWED FOR CODE COMPLIANCE, CALIFORNIA BUILDING CODE, 2013
OPM-0043-13
BY: Jeffrey Y. Kikumoto
DATE: 06/23/2016

SEISMIC CABLE BRACING OFF STRUT HANGER
LONGITUDINAL OPTION FOR SUSPENDED DUCTWORK

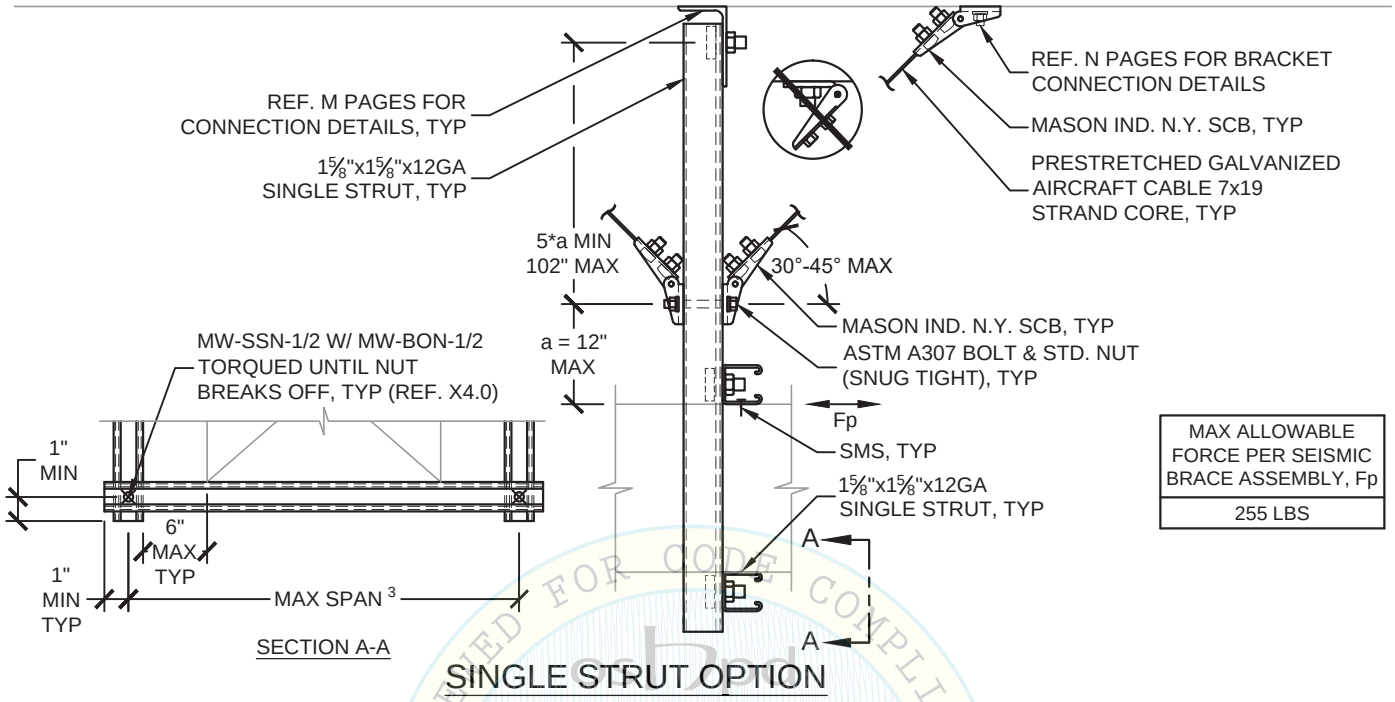

SINGLE STRUT OPTION

MAX ALLOWABLE FORCE PER SEISMIC BRACE ASSEMBLY, Fp
255 LBS

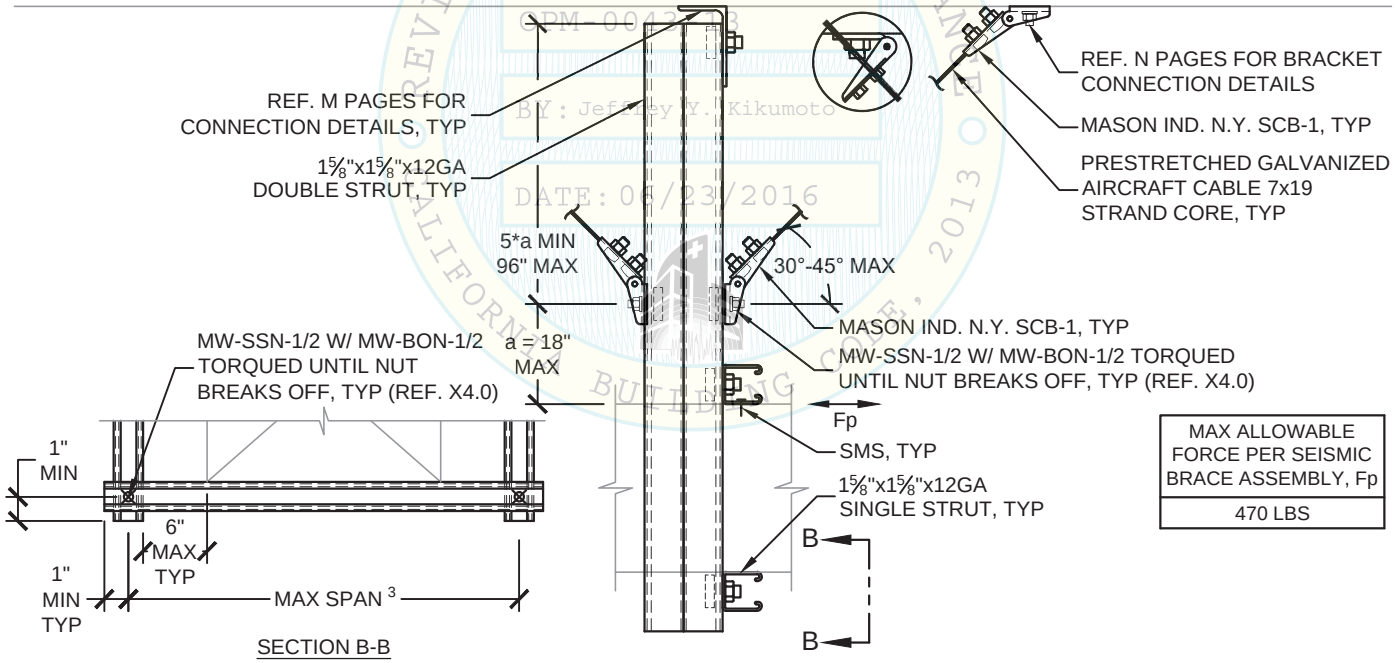

DOUBLE STRUT OPTION

MAX ALLOWABLE FORCE PER SEISMIC BRACE ASSEMBLY, Fp
470 LBS

NOTES:
1) REFER TO APPROPRIATE D PAGES FOR DIMENSIONS AND ANNOTATIONS NOT SHOWN.
2) SINGLE STRUT AND DOUBLE STRUT OPTIONS MAY CARRY UP TO A MAXIMUM OF 30LBS/FT OR 60LBS/FT, RESPECTIVELY.
3) REFER TO T PAGES FOR TRAPEZE SELECTION FOR MAX STRUT SPAN.

MASON WEST, INC.
1601 E. Miraloma Ave. Placentia, CA 92870
TEL (714) 630 - 0701, www.masonwest.com

Jiefu "Jeff" Zhang, SE
California SE No. S5270

PAGE
A7.3

OPM-0043-13 BY: Jeffrey Y. Kikumoto DATE: 06/23/2016 RECEIVED FOR CODE COMPLIANCE, 2013 CALIFORNIA BUILDING CODE

PIPING GENERAL NOTES

1) This OSHPD Preapproval of Manufacturer's Certification (OPM) is based on the 2013 CBC. The demand (design forces) for use with this OPM shall be based on the 2013 CBC.

2) Per ASCE 7-10, Section 13.3.1, restraints and their anchorages must be capable of restraining horizontal, F_P, and vertical, F_{PV}, seismic accelerations as follows.

$$F_P = (0.7)\frac{0.4a_P S_{DS} W_P}{R_P/I_P}\left(1+2\frac{z}{h}\right) \quad \text{(ASD)} \quad \text{(ASCE 7-10 EQ 13.3-1)}$$

is not required to be taken greater than $(0.7)1.6S_{DS}I_P W_P$ (ASD) (ASCE 7-10 EQ 13.3-2)

shall not be taken less than $(0.7)0.3S_{DS}I_P W_P$ (ASD) (ASCE 7-10 EQ 13.3-3)

$$F_{PV} = (0.7)0.2S_{DS}W_P \quad \text{(ASD)}$$

Where:

- S_{DS} = short period spectral acceleration - up to 2.5g. Values of S_{DS} indicated in the general notes of the structural drawing take precedence over those calculated per ASCE 7-10, 11.4.4.
- W_P = component (or tributary length of pipe) operating weight (lbs/ft).
- I_P = component importance factor
  - = 1.5 for OSHPD 1 & 4 in accordance with 2013 CBC, Section 1616A.1.17 and for OSHPD 2 & 3, where required by ASCE 7, Section 13.1.3.
  - = 1.0 for OSHPD 2 & 3, when permitted by ASCE 7, Section 13.1.3.
- a_P = component amplification factor (Ref. ASCE 7-10, Table 13.6-1)
  - = 1.0 for gravity waste, vent and drain cast iron plumbing pipe.
  - = 2.5 for all other piping and tubing.
- R_P = component response modification factor (Ref. ASCE 7-10, Table 13.6-1)
  - = 2.5 for gravity, waste, vent and drain cast iron plumbing pipe.
  - = 3.0 for piping and tubing constructed of low-deformability materials such as cast iron, glass, and nonductile plastics.
  - = 4.5 for piping and tubing not in accordance with ASME B31, including in-line components, constructed of high- or limited-deformability materials, with joints made by threading, bonding, compression couplings, or grooved couplings.
  - = 6.0 for piping in accordance with ASME B31, including in-line components, constructed of high- or limited-deformability materials, with joints made by threading, bonding, compression couplings, or grooved couplings.
  - = 9.0 for piping and tubing not in accordance with ASME B31, including in-line components, constructed of high-deformability materials, with joints made by welding or brazing.
  - = 12.0 for piping in accordance with ASME B31, including in-line components with joints made by welding or brazing.

  NOTE: Per ASCE 7-10, Section 13.4.1, do not use an Rp factor greater than 6.0 when calculating Fp and Fpv for design of the attachment.
- z = height in structure of point of connection of component with respect to base (ft).
- h = average roof height of structure with respect to base (ft).

3) For systems anchored to concrete only, the anchorage to concrete overstrength factor, Ωo, must be applied. Sections M & N provide alternate allowable load tables with and without Ωo applied. For cases where Ωo is applicable, use the appropriate tables in Sections M & N so it is not necessary to apply this factor when calculating F_P and F_{PV}. Ωo is not applicable if a yielding steel element is considered in the load path. Refer to ACI 318-11 Appendix D, Section D.3.3.4.3 for a list of qualifying conditions. The Registered Design Professional (RDP) shall use the allowable vertical loads under overstrength factor Ωo = 2.5 unless the vertical support complies with one of the qualifying conditions.

MASON WEST, INC.
1601 E. Miraloma Ave. Placentia, CA 92870
TEL (714) 630 - 0701, www.masonwest.com

Jiefu "Jeff" Zhang, SE
California SE No. S5270

PAGE
A10.0

PIPING GENERAL NOTES (continued)

4) A complete description on how to use these guidelines is provided in Section A11. It includes specific examples for both using the enclosed details/charts and a layout procedure for bracing of suspended pipe systems.

Notes on Seismic Bracing:

1) These guidelines list installations which may be exempt from seismic bracing under the 2013 CBC. The RDP shall be responsible for determining whether to allow these exceptions, subject to approval by the SEOR and OSHPD.

2) Each straight run of a pipe system requires a minimum of two transverse braces (perpendicular to the run). (Option: A longitudinal brace located at any point of the straight run on the opposite side of an elbow or tee may act as a transverse brace. Refer to the layout examples detailed in Section A12.)

3) Each straight run of a pipe system requires a minimum of one longitudinal brace (parallel to the run). (Option: A transverse brace on the opposite side of an elbow or tee can act as a longitudinal brace. Refer to the layout examples detailed in Section A12.)

   Note: For items 2) and 3) above, a short run of piping may not require seismic bracing if its tributary seismic load transfers to an adjacent run of pipe that is sufficiently seismically braced that can accept the additional seismic loads, when approved by OSHPD for a specific project.

4) Transverse and longitudinal braces that project to the overhead structure shall be installed between 30 and 60 degrees from horizontal. Braces that project to an adjacent wall may be installed directly horizontal (zero degrees) or between 30 and 60 degrees from the horizontal. However, this is limited depending on the capacity of the brace and method of connection to structure.

5) Seismic bracing may consist of solid bracing designed to accept loads in tension and compression or cable bracing designed to accept tension loads only. Each brace method requires a vertical hanger within close proximity of their connection to the distribution system. (Refer to the specific detail for limitations). The vertical hanger may or may not require stiffening or additional anchorage to the structure (Refer to Notes on Supports, Page A10.2).

6) Avoid mixing solid bracing with cable bracing in the same direction on any run of a distribution system unless specifically engineered and approved by the enforcement agency.

7) Avoid bracing a system to two different parts of a building which may act differently in response to an earthquake (i.e. separated by a seismic joint). In cases where this may occur, the pipe run must be designed to accept the seismic relative displacement.

8) Systems with significant thermal motion shall be designed on a case by case basis by a professional engineer familiar with both seismic loading and thermal expansion.

REVIEWED FOR CODE COMPLIANCE
OSHPD
OPM-0043-13
BY: Jeffrey T. Kikumoto
DATE: 06/23/2016
CALIFORNIA BUILDING CODE, 2013

MASON WEST, INC.
1601 E. Miraloma Ave. Placentia, CA 92870
TEL (714) 630 - 0701, www.masonwest.com

Jiefu "Jeff" Zhang, SE
California SE No. S5270

PAGE
A10.1

PIPING GENERAL NOTES (continued)

9) Seismic brace details for suspended pipe systems include maximum allowable horizontal seismic load, F_P, at different brace angle ratios. The details include Mason Industries N.Y. seismic brace component size, aircraft cable or solid brace member size, acceptable hanger rod diameter(s) and hanger rod stiffening requirements. Trapeze member sizes and connection to structure for both hanger rods and seismic braces are tabulated and/or detailed in Sections B, T, M, and N, respectively.

10) Seismic brace requirements for seismic accelerations ranging from 0.25 to 1.0g (ASD) are tabulated in Sections B1. Each schedule is designed to a specific seismic acceleration and provides maximum transverse, longitudinal and all-directional brace spacings based on operating weight per lineal foot of the pipe system. In addition, the schedules provide hanger rod and seismic brace connection options that meet the same criteria. For systems that require design for over 1.0g, the brace spacing is reduced (Refer to Page A10.6, note 3).

11) Stacked piping systems that share support rods must be braced independently from one another. Each section of threaded rod between trapezes and/or the building structure is subject to vertical stiffening requirements.

12) Vertical drops from suspended pipe systems to equipment (or flexible connectors where applicable) may be braced using the transverse and longitudinal braces in this manual. Note: Do not exceed ½ of the maximum brace spacing as measured from the seismic brace to the equipment or flexible connector when bracing vertical drops. (Refer to the Figures on Page A12.2.) If the transverse or longitudinal brace cannot accept the full vertical drop, a seismic floor support designed for the applicable loads is required. Design of this support shall account for seismic relative displacement between floors and may require a flexible connection between the floor support and the first seismic brace location above.

13) Any system which crosses a building separation or seismic joint must be designed to accommodate the seismic relative displacement per ASCE 7-10, Section 13.3.2, 13.3.2.1, and 13.3.2.2, or as specified by the engineer of record for approval by the enforcement agency.

Notes on Supports:

1) Where the seismic brace system incorporates the use of a threaded vertical hanger rod designed to carry gravity loads only, additional anchorage and/or stiffening may be required as detailed. General support of suspended pipe systems and equipment to carry gravity loads shall be determined by the engineer of record and/or mechanical code requirements. However, hanger rod connection details in this manual may be used as a guide for these supports. The use of "C-Clamps" designed to attach threaded rod to one side of a steel beam flange shall not be used unless they are provided with a restraining strap or hook to the opposite beam flange, equivalent to those specified in NFPA 13, Section 9.3.7 and approved by OSHPD.

2) Support rod capacity and its anchorage to the structure is an important part of a solid bracing system. Solid braces shall not be attached to existing systems or support rods designed for gravity loads unless they are checked for increased loads.

3) Threaded vertical hanger rods where seismic sway bracing is attached may require stiffening if the length of the rod exceeds the maximum unbraced rod length indicated on the kit installation detail in Sections C and F. However, if the calculated compression on the rod due to combined gravity, the vertical brace component of the bracing system as a result of Fp, and Fpv loads is less than or equal to zero, no rod stiffening is required, regardless of rod length. A vertical rod stiffener using a 1⅝"x1⅝"x12ga strut channel or steel angle cut to the appropriate length and attached to the threaded rod with a minimum of two Mason Ind. N.Y. Type UCC or SRC clamps is required, as detailed in Sections C and F. The contractor may substitute a break-off bolt set to a minimum of 10 ft-lbs (Ref. X3.0). Rod stiffening strut may be solid, slotted or punched. Ref. X7.0 and X7.1 for strut member data.

REVIEWED FOR CODE COMPLIANCE
OSHPD
BY: Jeffrey Y. Kikumoto
CALIFORNIA BUILDING CODE

MASON WEST, INC.
1601 E. Miraloma Ave. Placentia, CA 92870
TEL (714) 630 - 0701, www.masonwest.com

Jiefu "Jeff" Zhang, SE
California SE No. S5270

PAGE
A10.2

PIPING GENERAL NOTES (continued)

4) Trapeze supports shall consist of 12 gauge single or double channel strut, steel angles or tube steel as tabulated in Sections B and T. For gravity only trapeze supports and trapeze supports where transverse seismic braces are installed, the acceptable size of the trapeze member is provided in the same sections. For trapeze supports where longitudinal seismic braces are installed, the acceptable size of the trapeze member is also provided. Trapeze members may be provided with round holes sized for hanger rods. Ref. X7.0 and X7.1 for strut member data. In all cases, for analysis purposes, the following information is required: a) seismic 'g' coefficient, b) pipe weight per foot and c) maximum span between threaded rod supports. The trapezes shall be supported by threaded rods, with nuts and washers as detailed in Section F and with rod stiffeners as required per Note 3.

5) Concrete overstrength factor, Ω_0, is not required for hanger supports designed for gravity only or hanger supports at seismic cable brace locations where seismic forces do not exceed 20% of the total forces.

Notes on Seismic Cable Bracing:

1) Cables shall be prestretched galvanized 7x19 strand core aircraft cable, with no limit to their installed length. Cables meet the following specifications: MIL-DTL-83420M with Amendment 2, Type 1 non-jacketed cable.

2) Cables shall be installed slightly slack, so as not to support gravity loads.

3) Cable shall connect the braced item to a building structural element. Cable shall have at each end a bracket to make the connections. The cable assembly, with connection brackets, shall be Mason Ind. N.Y. SCB or SCBH, refer to pages X1.0 & X1.1. Cable is held to end brackets with one or two bolts. Cable bolts shall be tightened to the torque values stated in the details or, in the case where break off nuts are provided, until the nut breaks off. Break off nuts are as manufactured by Mason West, Inc. (Refer to page X4.0).

4) The Mason Ind. N.Y. SCBH component can be used for connection directly to the threaded vertical hanger rod used for supporting system gravity loads as detailed in Sections C and F.

5) The SCB bracket and cable (Ref. X1.0), SCBH bracket and cable (Ref. X1.1), UCC rod stiffener clamp (Ref. X3.0), and SRC rod stiffener clamp (Ref. X3.1) are manufactured by Mason Ind. N.Y. and are included (with accompanying hardware) in the kit options provided in Sections C and F.

Notes on Seismic Solid (Rigid) Bracing:

1) Solid bracing members shall be 12 gauge channel strut or steel angle. Strut members may be solid, slotted or punched. The details in Sections C and F indicate the minimum solid brace size based on a maximum solid brace length. The charts on pages X2.0, X2.1, and X2.2 tabulate different solid brace member sizes for maximum installed lengths of 5'-0", 9'-6" or 14'-6". Ref. X7.0 and X7.1 for strut member data.

2) Solid brace members shall be connected to both the distribution system and the structure using the seismic solid brace components (Mason Ind. N.Y. Type SSBS, SHB, or SSB. Refer to pages X2.0, X2.1, or X2.2, respectively).

3) The attachment between the solid brace component and the 12 gauge channel strut shall consist of (1) or (2) 1/2" bolt and strut nut connections torqued to 50 ft-lbs or, in the case where break off nuts are provided, until the nut breaks off. Refer to Sections C and F to determine the quantity of bolt/strut nut combinations required. Break off nuts are as manufactured by Mason West, Inc. (Refer to page X4.0).

4) The SSBS bracket (Ref. X2.0), SHB bracket (Ref. X2.1), SSB bracket (Ref. X2.2), UCC rod stiffener clamp (Ref. X3.0), and SRC rod stiffener clamp (Ref. X3.1) are manufactured by Mason Ind. N.Y. and are included (with accompanying hardware) in the kit options provided in Sections C and F.

CERTIFIED FOR CODE COMPLIANCE
CALIFORNIA BUILDING CODE 2013
DATE: 06/23/2016

MASON WEST, INC.
1601 E. Miraloma Ave. Placentia, CA 92870
TEL (714) 630 - 0701, www.masonwest.com

Jiefu "Jeff" Zhang, SE
California SE No. S5270

PAGE
A10.3

PIPING GENERAL NOTES (continued)

Notes on Seismic Brace Attachment to Building Structure:

1) Attachment methods and hardware (connectors) used for seismic bracing attachment to the building structural element is the critical factor in the design of seismic sway-bracing. Lightweight structures may limit the maximum spacing between seismic braces. The structural engineer of record shall determine the maximum allowable seismic loads that may be imposed on the building structure.

2) Attachment to different types of structures are addressed in these guidelines. Attachment types include reinforced normal or sand lightweight concrete (flat slabs, slabs poured in steel decking, walls or columns), fully grouted reinforced concrete masonry, hollow steel decking, steel framing, timber framing, and metal stud wall framing. Attachments may be made with pre- or post-installed concrete anchors, machine bolts, self-drilling and self-tapping screws, lag bolts, nails or in cases of steel on steel connections, by arc-welding. Use of attachment methods not detailed in these guidelines must be engineered on an individual job basis subject to approval by the enforcement agency. Note: The structural engineer of record shall verify that attachment details specified by the RDP are in accordance with the design concept for the primary structure.

3) Expansion anchors shall be Hilti Kwik Bolt TZ, Powers Power-Stud+ SD1, Mason Ind. N.Y. SAS(E) or Powers Power-Stud+ SD2 for minimum 3000 psi concrete slabs, beams, or walls and concrete filled decks (sand light or normal weight) installed in accordance with ICC Reports ICC ESR 1917, 2818, 3037 or 2502, respectively. Hilti Kwik Bolt 3 expansion anchors shall be used to resist static & transient seismic tension & shear loads in uncracked, grout-filled concrete masonry. Expansion anchors designed to ICC-ES AC01 are limited to allowable stress design only in accordance with AC01 1.2. SEOR shall verify that: (1) masonry is not cracked as defined in ICC-ES AC01 Section 2.3; calculation required to show masonry wall would not crack under the design earthquake loads under all service load conditions; wall has to remain elastic; (2) masonry wall shall be fully grouted in accordance with ESR-1385 Section 3.2; (3) condition of use requirements in accordance with ESR-1385 Section 5.0 is satisfied. When expansion anchors are used, 50 percent of alternate bolts in a group shall be tension tested or torque tested per 2013 CBC, Section 1913A.7. Testing shall be done in the presence of the special inspector and a report of the test results shall be submitted to the enforcement agency. If any anchors fail, test all previously untested anchors installed by the same trade until 20 consecutive anchors pass. Then resume the original test frequency. Refer to page A0.4 for test loads.

4) Concrete inserts shall be Mason West Type MW-PAL-A for installation in normal or sand lightweight concrete slabs or MW-CDI for installation in normal or sand lightweight concrete filled metal decks.

5) All welded attachments shall be minimum 70xx electrode welds. Minimum 60xx electrode welds may be used for steel thicknesses that are 12 gauge or less.

6) Metal decks for expansion anchor attachments and MW-CDI inserts shall be minimum 20 gauge with either a maximum 3 inch flute and minimum 1-1/2 inch cover or a maximum 1-1/2 inch flute and minimum 2-1/4 inch cover. Metal decks for MW-PAL-A insert shall be minimum 20 gauge with 3" flute and 3-1/4" cover. Refer to appropriate M2 and N2 pages for allowable deck anchor attachments. Concrete fill shall be minimum 3000 psi sand lightweight concrete. *Note:* Metal decks with minimum 3000 psi stone aggregate concrete fill may use the sand lightweight concrete deck charts.

7) Concrete attachments are based on specified anchor bolts or inserts. Substitution of alternate anchors must be approved by Mason West and the enforcement agency on a job by job basis.

8) When installing drilled-in anchors in existing non-prestressed reinforced concrete, use care and caution to avoid cutting or damaging reinforcing bars. When installing them in existing prestressed concrete, locate the prestressed tendons by using a non-destructive method and do not cut or damage the tendons during installation.

9) Attachments are provided for wide flange structural steel members, open web steel trusses as well as wood trusses, joists and beams in Section N3.11-3.13, N4.10-4.13.

Approved
OPM-0043-13
BY: Jeffrey T. Kikumoto
DATE: 06/23/2016

MASON WEST, INC.
1601 E. Miraloma Ave. Placentia, CA 92870
TEL (714) 630 - 0701, www.masonwest.com

Jiefu "Jeff" Zhang, SE
California SE No. S5270

PAGE
A10.4

PIPING GENERAL NOTES (continued)

Notes on Suspended Piping: (Refer to Page A10.7 for Fire Protection Pipe Brace Requirements)

1) Per 2013 CBC Sections 1616A.1.18 and 1616A.1.26, ASCE 7-10 Sections 13.1.4 and 13.6.8 design of piping systems and attachments for the seismic forces are not required for piping where any of the following are satisfied:
   a) The component is positively attached to structure; and the project is designated as Seismic Design Categories D, E or F*; flexible connections are provided between the pipe and the component/equipment*; and the pipe weighs 5 lbs/ft or less; or
   b) Trapeze assemblies are used to support piping whereby no single pipe exceeds the limits set forth in d) or e) below and the total operating weight of the piping supported by trapeze assemblies is less than 10 lbs/ft; or
   c) The piping is supported by hangers and each hanger in the piping run is 12" or less in length from the top of the pipe to the supporting structure. Where pipes are supported on a trapeze, the trapeze shall be supported by hangers having a length of 12" or less from the top of the trapeze member to the supporting structure. Where rod hangers are used with a diameter greater than 3/8", they shall be equipped with swivels, eye bolts or other devices to prevent inelastic bending of the rod; or
   d) Piping with an R_P of 4.5 or greater is used and provisions are made to avoid impact with other structural or nonstructural components or to protect the piping in the event of such impact and the folllowing size requirements are met.

i. The project is designated a Seismic Design Category of D, E or F*, the value of I_P is greater than 1.0*, and the nominal pipe size is 1" or less; or

ii. The project is designated a Seismic Design Category of D, E or F*, the value of I_P = 1.0*, and the nominal pipe size is 3" or less.

SUMMARY OF INDIVIDUALLY SUPPORTED PIPING SYSTEMS THAT ARE EXEMPT FROM DESIGN FOR SEISMIC FORCES AND SEISMIC RELATIVE DISPLACEMENTS (PER NOTES 1a and 1d ABOVE)

Mechanical, Plumbing, Process Pipe and Similar Systems (Rp ≥ 4.5, Refer to Page A10.0, Note 2)

SYSTEM (e.g.) - Steel or Copper Material	Ip*	EXEMPTIONS
Heating Hot and Chilled Water Condenser Water High Temperature Hot Water Steam and Steam Vent Condensate Return Water Boiler Feed Water and Blowdown Domestic Hot and Cold Water Fuel Oil, Gas and Compressed Air Medical Gases and Vacuum Industrial, Irrigation and Soft Water Emergency Cold Water Grease Waste and Vent Sanitary Waste and Vent	1.0	1. All pipes ≤ 3" diameter. 2. All pipes exempted for the Ip=1.5 case below.
	1.5	1. The following pipes (≤ 5 lbs/ft) where a flexible connection is provided between pipes and components*. a. ≤ 2" diameter vent, gas or empty SCH 40 steel pipe. b. ≤ 1-1/2" diameter SCH 40 steel pipe. c. ≤ 3" diameter vent, gas or empty copper pipe. d. ≤ 2" diameter copper pipe. e. Any other piping with an operating weight ≤ 5 lbs/ft. (Note: Refer to system weights in the appendix. Pipes with hazardous contents (e.g. medical gases, fuel oil, natural gas, etc.) shall be braced regardless of weight. Pipe size exemption 2 below still applies. Non-hazardous contents include, but are not limited to, medical vacuum and compressed air.) 2. All other pipes ≤ 1" diameter.

Plumbing Pipe Gravity, Waste, Vent and Similar Systems (Rp < 4.5, Refer to Page A10.0, Note 2)

SYSTEM (e.g.) - Non-Ductile Cast Iron Material	Ip*	EXEMPTIONS
Sanitary Waste and Vent Storm and Overflow Drain Grease Waste and Vent	1.0 or 1.5	1. The following pipes where a flexible connection is provided between the pipes and components*. a. No-Hub cast iron vent pipes ≤ 3" diameter. b. No-Hub cast iron pipes ≤ 2" diameter. c. Any other piping with an operating weight ≤ 5 lbs/ft.

*** Refer to A10.6 for notes on Seismic Design Category, Ip and flexible connection.**

MASON WEST, INC.
1601 E. Miraloma Ave. Placentia, CA 92870
TEL (714) 630 - 0701, www.masonwest.com

Jiefu "Jeff" Zhang, SE
California SE No. S5270

OPM-0043-13

PIPING GENERAL NOTES (continued)

* Notes:
1) Seismic Design Category and I_P can be found in the general notes of the contract structural drawings for a specific project under Design Criteria. Piping not detailed to accommodate the seismic relative displacement at connections to other components shall be provided with connections having sufficient flexibility to avoid failure of the connection between the components.
2) Flexible connections are not required in cases where pipe is rigidly attached to the same floor or wall that provides vertical and lateral support for the equipment as there is no relative motion between pipe and equipment.
3) Flexible connections are required at seismic separation joints.

2) Section A13 of these guidelines details the "12 Inch Rule" exception described in Note 1.c for Suspended Piping.

3) Steel and copper pipe shall be braced at the spacings tabulated in Section S. Brace spacings vary based on the value of Ip, pipe material, service (water filled or vapor) and pipe connection method. Longitudinal brace spacings shall not exceed 3 times the tabulated transverse brace spacings. For cases where multiple pipes with varying brace spacings are supported on a trapeze, the smallest brace spacing shall govern. The seismic design engineer may design brace spacings for trapezed pipe based on combined pipe sections and/or by adding steel strengthening sections on a job by job basis subject to approval by the enforcement agency.

4) Cast iron pipe (no-hub pipe) brace spacings shall not exceed the spacings tabulated in Section S. No-hub couplings shall be manufactured in accordance with ASTM C1540, shall be certified in accordance with FM 1680 Class 1 and gravity hangers shall be spaced per the requirements of Table 313.1 of the 2013 California Plumbing Code (CPC 2013) for no-hub cast iron pipe.

Exception: Cast iron (no-hub) pipe joined by couplings not satisfying ASTM C1540 or not certified in accordance with FM 1680 Class 1 shall be designed on a project by project basis, and shall require project specific OSHPD approval.

5) Rigid grooved coupling listed for UL Standard 213 shall be permitted in horizontal run of pipe. Flexible grooved coupling listed for UL Standard 213 shall be permitted in vertical risers (to accommodate drift) and other locations (e.g. seismic separation, equipment nozzle, etc.) to accommodate small movement and/or rotation. Non-UL listed groove couplings shall not be used unless approved on project specific basis.

6) Seismic restraints for individually supported pipes shall be attached directly to the pipe using a Mason West, Inc. Type WPL, welded pipe lug (Refer to page X8.4) for standard schedule or larger steel pipe or a Mason West, Inc. Type SPC seismic pipe clamp (Refer to page X8.3) for steel and cast iron pipe utilizing details in Section C. In addition, a Mason West, Inc. Type SSC strut steel clamp (Refer to page X8.0) for steel pipe or Type SCC strut copper clamp (Refer to page X8.1) for copper pipe may be used utilizing detail pages A18.0 - A18.2.

7) Seismic restraints for trapeze supported pipe shall be attached to the trapeze member at the hanger locations as detailed in Section F. Pipes supported by trapezes at seismic brace locations shall utilize Mason West, Inc. Type SSC, strut steel clamp (Refer to page X8.0) for steel pipe or Type SCC, strut copper clamp (Refer to page X8.1) for copper pipe utilizing details in Section F.

OPM-0043-13
Kikumoto

MASON WEST, INC.
1601 E. Miraloma Ave. Placentia, CA 92870
TEL (714) 630 - 0701, www.masonwest.com

Jiefu "Jeff" Zhang, SE
California SE No. S5270

PAGE
A10.6

PIPING GENERAL NOTES (continued)

8) The pipe weights tabulated in Section B1 are based on schedule 40 steel pipe for up to 12" diameter, schedule 30 steel pipe for 14" to 18" diameter and schedule 20 for 20" and 24" diameters. Total weights include water and insulation. Verify the maximum weight per foot listed in the column next to pipe size when determining seismic brace requirements tabulated in Section B1. The appendix of these guidelines tabulates the weight per foot for steel, copper, PVC, PVDF and cast iron pipe.

9) If a 2 piece rod is used to support piping, minimum engagement of the rod in the coupling nut shall be equal to the rod diameter. Rods shall be run up tight in the coupling nut.

10) For vertical support methods at seismic brace locations other than what are detailed in this manual, the seismic design engineer must provide calculations and/or testing of any additional components or materials (e.g. hangers, clamps, etc.) to comply with the 2013 CBC on a job by job basis subject to review and approval by the enforcement agency.

Notes on Vertical Risers:

1) Vertical piping systems supported at each floor shall be considered seismically braced if the penetration through each floor is tightly packed with approved firestops, satisfying NFPA 13-13 Section 9.3.5.8.5 and the floor to floor spacing does not exceed the maximum brace spacing tabulated in Section S. Tops of risers exceeding 3 feet shall be provided with a 4-way brace. Where the 4-way brace is attached to the horizontal piping, it shall be installed within 2 feet of the centerline of the riser.

2) Vertical pipe risers in an open shaft must be attached to steel supports with both steel supports and connections sized to accept the combined gravity and seismic loads. Thermal loads shall be considered, where applicable. Lateral seismic restraint spacing shall not exceed the spacings tabulated in Section S. Supports and connections must be engineered on a job by job basis subject to approval by the enforcement agency. Seismic relative displacement between floors shall be considered in the design.

3) Vertical pipe risers subject to thermal expansion or contraction may be engineered to allow pipe movement and reduce load transfer between floors. Sliding guides and/or resilient anchors shall be employed to allow or control thermal movement while designed to accept seismic loads at maximum spacings tabulated in Section S. Pipe penetrating cored holes at floor levels that are tightly packed may be considered as pipe guides. Where insulated pipes penetrate cored holes used as guides, a hard insulation insert that exceeds the floor depth at each end is required. Riser clamps or brackets shall be designed to transfer resultant horizontal and vertical loads from the pipe to the supports. Supports and connections must be engineered on a job by job basis subject to approval by the enforcement agency.

Notes on Fire Protection (or Sprinkler) Pipes:

1) Per NFPA 13 Standard for the Installation of Sprinkler Systems, 2013 Edition, seismic bracing is required for the following systems (Note: Ip = 1.5 for all Fire Protection Piping per ASCE7-10 Section 13.1.3, Note 1):
   a) In Seismic Design Categories C, D, E or F:
      i. All mains.
      ii. All cross mains.
      iii. All branch lines 2-1/2" diameter nominal pipe size and larger
      iv. The last length of pipe at the end of a feed or cross main.

      Exception: Pipes supported by individual hangers where each hanger in the pipe run is 6" or less in length from the top of the pipe to the supporting structure.

MASON WEST, INC.
1601 E. Miraloma Ave. Placentia, CA 92870
TEL (714) 630 - 0701, www.masonwest.com

Jiefu "Jeff" Zhang, SE
California SE No. S5270

PAGE
A10.7

PIPING GENERAL NOTES (continued)

2) The maximum distance between hangers shall not exceed that specified in NFPA 13 Table 9.2.2.1(a) except where the provisions of NFPA 13 Section 9.2.4 apply.

3) Refer to Page A10.1 notes 2, 3, 4, 5, 6 and 7 for transverse and longitudinal brace discussion.

4) Maximum transverse brace spacings shall not exceed 40 feet for ductile steel pipe 2½" diameter and larger and 30 feet for ductile steel pipe 2" diameter and smaller. The Zone of Influence (ZOI) Method in NFPA 13, Annex 13 shall be addressed when determining maximum transverse brace spacing. The distance between the last brace and the end of the pipe shall not exceed 6 feet.

5) Maximum longitudinal brace spacings shall not exceed 80 feet for ductile steel pipe 2½" diameter and larger and 60 feet for ductile steel pipe 2" diameter and smaller. The distance between the last brace and the end of the pipe shall not exceed 40 feet.

6) Transverse braces may act as longitudinal braces if they are installed within 24" of the centerline of the piping being braced longitudinally and the lateral brace is on a pipe of equal or greater size than the pipe being braced longitudinally. Similarly, longitudinal braces may act as transverse braces if they are installed within 24" of the centerline of the piping being braced transversely.

7) Each run of pipe between changes in direction shall be provided with both lateral and longitudinal braces. However, it is permissible to brace a straight pipe run of less than 12 feet using the braces on the adjacent runs of pipe.

8) Refer to Page A10.6, note 5 for pipes with grooved couplings. Where flexible couplings are installed on mains other than as required in NFPA 13 Section 9.3.2, a transverse brace shall be provided within 24" of every other coupling, including flexible grooved couplings, but not more than 40 feet on center.

9) Tops of vertical offsets or risers exceeding 3 feet shall be provided with a 4-way brace. Where the 4-way brace is attached to the horizontal piping, it shall be installed within 2 feet of the centerline of the riser. The maximum distance between 4-way braces on a riser shall not exceed 25 feet.

10) Restraint of branch lines is considered a lesser degree of resisting loads than bracing and shall be provided as required in NFPA 13 Section 9.3.6.

REVIEWED FOR CODE COMPLIANCE
osDpd
DATE: 06/23/2016
CALIFORNIA BUILDING CODE, 2013

MASON WEST, INC.
1601 E. Miraloma Ave. Placentia, CA 92870
TEL (714) 630 - 0701, www.masonwest.com

Jiefu "Jeff" Zhang, SE
California SE No. S5270

PAGE
A10.8

PIPING DESIGN PROCEDURE

Follow the five steps below to determine the seismic kit installation, hanger and brace connection details that pertain to a specific suspended piping system. An example is provided on the following pages.

Step 1. **Determine 'g' Forces:**
Calculate the lateral acceleration, F_P, and vertical acceleration, F_{PV}, in terms of 'g' using the equations outlined on page A10.0 for each level of the building.

Step 2. **Determine Operating Weight (lbs/ft or lbs):**
Determine the operating weight, W_P, of the distribution system (lbs/ft) or component (lbs) to be seismically braced. Refer to the appendix for pipe weights.

Step 3. **Determine Seismic Forces (lbs):**
Determine the maximum allowable brace spacings from page A10.6 and Section S. *If you choose to use the pre-designed schedules in Section B, skip the remainder of this step.*
Calculate the maximum lateral and vertical forces applied to the seismic brace system. Resolve the maximum lateral force to the brace, F_P, and maximum load on the hanger rod, T_{Rod}.

For trapeze supported piping, determine the maximum allowable brace spacing from page A10.6, Section S and Section X8. *If you choose to use the pre-designed schedules in Section B, skip the remainder of this step.*
Calculate the maximum lateral and vertical forces applied to the seismic brace system. Resolve the maximum lateral force to the brace, F_P, and maximum load on the hanger rod, T_{Rod}.

The resultant compression load on the hanger rod at seismic brace locations may be calculated to determine if rod stiffening is required.

Check trapeze seismic attachment to pipe. Use tables in Section S3 to check the capacities of the strut clamps to strut trapezes or details in Section A16 for additional options.

Step 4. **Select Seismic Kit Installation, Hanger and Brace connection Details:** Select the appropriate details from the schedules in Section B for single hung pipe or pipe on trapeze based on maximum 'g' force, system weight per foot or pipe size and maximum transverse, longitudinal and all directional brace spacing.

If you calculated the seismic forces in step 3, verify the details selected are correct by comparing the calculated lateral force, F_P, and load on the hanger rod, T_{Rod}, with the rated loads tabulated on the detail sheets. If F_P and T_{Rod} are less than or equal to the tabulated rated loads, the details are acceptable.

Step 5. **Select Trapeze Member (where applicable):**
Select the trapeze member from the tables in Section B or T for transverse, longitudinal and all-directional seismic braces based on 'g' force and maximum span of trapeze member.

APPROVED FOR CODE COMPLIANCE
OSHPD
OPM-0043-13
DATE: 06/23/2016
BY: Jeffrey Y. Kikumoto
CALIFORNIA BUILDING CODE, 2013

MASON WEST, INC.
1601 E. Miraloma Ave. Placentia, CA 92870
TEL (714) 630 - 0701, www.masonwest.com

Jiefu "Jeff" Zhang, SE
California SE No. S5270

PAGE
A11.0

PIPING DESIGN PROCEDURE (continued)

Example:

4"Ø standard steel pipe is suspended within a 3 story poured-in place concrete building with basement. The pipe is supported at every 10 feet. The elevation of each floor, including the basement, is 15 feet. The short period spectral acceleration, S_{DS}, listed on the contract structural drawings, is 1.02. The component importance factor, I_P = 1.5. (For trapeze supported pipe example, refer to page A11.4).

Note: When anchoring to concrete, allowable loads have been reduced by the concrete overstrength factor, Ωo, where applicable, in Sections M & N. Therefore, Ωo is not used when calculating applied seismic forces in this example.

Step 1. **Determine 'g' Forces**

Component amplification and response modification factors for steel mechanical pipe are as follows:

$a_P = 2.5$; $R_P = 6.0$

Therefore,

$$F_P = (0.7)\frac{0.4(2.5)(1.02)W_P}{(6.0)/(1.5)}(1+2\frac{z}{h}) = 0.18(1+2\frac{z}{h})g$$

$$F_{P(min)} = (0.7)(0.3)(1.02)(1.5)W_P = 0.32g$$

$$F_{P(max)} = (0.7)(1.6)(1.02)(1.5)W_P = 1.71g$$

$$F_{PV} = (0.7)(0.2)(1.02)W_P = 0.14g$$

Tabulated below are the 'g' forces for each level of the building

Floor Level	F_P	F_{PV}
Basement	0.32g	0.14g
1	0.32g	0.14g
2	0.42g	0.14g
3	0.54g	0.14g

Step 2. **Determine Operating Weight (lbs/ft):**

From page APP2.1, the operating weight of a 4"Ø steel pipe with water and insulation is 18.3 lbs/ft.

OSHPD OPM-0043-13 BY: Jeffrey Y. Kikumoto DATE: 06/23/2016 CODE COMPLIANCE CALIFORNIA BUILDING CODE, 2013

MASON WEST, INC.
1601 E. Miraloma Ave. Placentia, CA 92870
TEL (714) 630 - 0701, www.masonwest.com

Jiefu "Jeff" Zhang, SE
California SE No. S5270

PAGE
A11.1

PIPING DESIGN PROCEDURE (continued)

Step 3. **Determine Seismic Forces (lbs):**

From page S1.0, the maximum transverse brace spacing for suspended steel pipe is 53 feet for Basement Level and Level 1, 50 feet for Level 2 and 47 feet for Level 3. However, due to seismic brace capacity limits, we will use 30 feet as the maximum brace spacing for this example. Maximum longitudinal brace spacing shall not exceed 3 times the transverse brace spacing. For this example, we will limit the longitudinal brace spacing to 60 feet.

Note: At this point, you have the option to calculate the seismic forces and loads on the hanger rods and complete this step or move on to step 4.

For Basement Level and Level 1,

F_P(Transverse) = 0.32 x 18.3 lbs/ft x 30 ft brace spacing = 176 lbs
F_P(Longitudinal) = 0.32 x 18.3 lbs/ft x 60 ft brace spacing = 351 lbs
F_{PV} = 0.14 x 18.3 lbs/ft x 10 ft support spacing = 26 lbs

Note: Fp does not need to be increased due to installation tolerances indicated in assembly details.

For seismic solid brace installations:

T_{Rod}(Transverse) = F_P(Transverse) tan (brace angle) + (18.3 lbs/ft x 10 ft + F_{PV}) = 385 lbs.

T_{Rod}(Longitudinal) = F_P(Longitudinal) tan (brace angle) + (18.3 lbs/ft x 10 ft + F_{PV}) = 560 lbs.

Note: Brace angle = 45 degrees for this example.

For seismic cable brace installations:

T_{Rod} = (18.3 lbs/ft x 10 ft + F_{PV}) = 209 lbs.

Note: In the case of piping on trapeze, for seismic solid and cable brace T_{Rod} calculations, 2/3 of the total gravity load is assumed as the worst case on each hanger. If this is not the case, make the necessary adjustment.

Similarly for Levels 2 and 3, F_P, F_{PV} and T_{Rod} are as tabulated below.

Floor Level	F_P (Transverse)	F_P (Longitudinal)	F_{PV}	T_{Rod}(Solid -Tran)	T_{Rod}(Solid-Long)	T_{Rod}(Cable)
Basement	176 lbs	351 lbs	26 lbs	385 lbs	560 lbs	209 lbs
1	176 lbs	351 lbs	26 lbs	385 lbs	560 lbs	209 lbs
2	231 lbs	461 lbs	26 lbs	440 lbs	670 lbs	209 lbs
3	296 lbs	593 lbs	26 lbs	505 lbs	802 lbs	209 lbs

C_{Rod} = $F_P$tan (brace angle) + F_{PV} - 0.9Wp
= 351 lbs x tan (45 degrees) + 26 lbs - 0.9 x (18.3 lbs/ft x 10 ft) = 212 lbs.

Note: If $C_{Rod} \leq 0$, rod stiffeners are not required.

REVIEWED FOR CODE COMPLIANCE
OSHPD
OPM-0043-13
BY: Jeffrey Y. Kikumoto
DATE 06/23/2016
CALIFORNIA BUILDING CODE, 2013

MASON WEST, INC.
1601 E. Miraloma Ave. Placentia, CA 92870
TEL (714) 630 - 0701, www.masonwest.com

Jiefu "Jeff" Zhang, SE
California SE No. S5270

PAGE
A11.2

PIPING DESIGN PROCEDURE (continued)

Step 4. **Select Seismic Kit Installation, Hanger and Brace connection Details:**

For 4" standard steel pipe with operating weight of 18.3 lbs/ft, acceptable seismic kit installation, hanger and connection details from the charts in Section B for each level of the building are as tabulated below.

Seismic Solid (Rigid) Brace, Hanger and Brace connection Details

Floor Level	Fp	Section B Page	Tran/Long Spacing	Kit Installation Details			Trans. Hanger Conn. Desig.	Long. Hanger Conn. Desig.	All Dir. Hanger Conn. Desig.	Trans. Brace Conn. Desig.	Long./ All Dir. Brace Conn. Desig.
				Transverse	Longitudinal	All-Directional					
Basement	0.32g	B1.1	30'/60'	C1.30	C1.32	C1.34	63H	63K	63L	63E	63G
1	0.32g	B1.1	30'/60'	C1.30	C1.32	C1.34	63H	63K	63L	63E	63G
2	0.42g	B1.1	30'/60'	C1.30	C1.32	C1.34	63H	63K	63L	63E	63G
3	0.54g	B1.2	30'/30'	C1.30	C1.32	C1.34	63K	63K	63L	63G	63G

Seismic Cable (Standard) Brace, Hanger and Brace connection Details

Floor Level	Fp	Section B Page	Tran/Long Spacing	Kit Installation Details			Hanger Conn. Desig.	Trans. Brace Conn. Desig.	Long./ All Dir. Brace Conn. Desig.
				Transverse	Longitudinal	All-Directional			
Basement	0.32g	B1.4	30'/60'	C2.30	C2.41	C2.42	63F	50E	63G
1	0.32g	B1.4	30'/60'	C2.30	C2.41	C2.42	63F	50E	63G
2	0.42g	B1.4	30'/60'	C2.30	C2.41	C2.42	63F	50E	63G
3	0.54g	B1.5	30'/30'	C2.40	C2.41	C2.42	75F	63G	63G

For calculated F_P and T_{Rod} select the appropriate details in Sections C, M and N by comparing the calculated values with the tabulated values indicated on each detail.

REVIEWED FOR CODE COMPLIANCE
OPM 0043-13
BY: Jeffrey Y. Kikumoto
DATE: 06/23/2016
CALIFORNIA BUILDING CODE, 2013

MASON WEST, INC.
1601 E. Miraloma Ave. Placentia, CA 92870
TEL (714) 630 - 0701, www.masonwest.com

Jiefu "Jeff" Zhang, SE
California SE No. S5270

PAGE
A11.3

PIPING DESIGN PROCEDURE (continued)

Example:

(4) 1¼" and (4) 1½" type K drawn copper gas pipes with (4) 2" type L copper water pipes are suspended within a 3 story poured-in place concrete building with basement. The piping is supported at every 8 feet. The elevation of each floor, including the basement, is 15 feet. The short period spectral acceleration, S_{DS}, listed on the contract structural drawings, is 1.02. The component importance factor, $I_P = 1.5$.

Note: When anchoring to concrete, allowable loads have been reduced by the concrete overstrength factor, Ωo, where applicable, in Sections M & N. Therefore, Ωo is not used when calculating applied seismic forces in this example.

Step 1. **Determine 'g' Forces**

Component amplification and response modification factors for suspended copper pipes are as follows:

$a_P = 2.5$; $R_P = 6.0$

Therefore,

$$F_P = (0.7)\frac{0.4(2.5)(1.02)W_P}{(6.0)/(1.5)}(1+2\frac{z}{h}) = 0.18(1+2\frac{z}{h})g$$

$$F_{P(min)} = (0.7)(0.3)(1.02)(1.5)W_P = 0.32g$$

$$F_{P(max)} = (0.7)(1.6)(1.02)(1.5)W_P = 1.71g$$

$$F_{PV} = (0.7)(0.2)(1.02)W_P = 0.14g$$

Tabulated below are the 'g' forces for each level of the building

Floor Level	F_P	F_{PV}
Basement	0.32g	0.14g
1	0.32g	0.14g
2	0.42g	0.14g
3	0.54g	0.14g

OSHPD CODE COMPLIANCE REVIEWED BY CALIFORNIA BUILDING CODE, 2013
OSHPD
OPM-0043-13
BY: Jeffrey Y. Kikumoto
DATE: 06/23/2016

Step 2. **Determine Operating Weight (lbs/ft):**

From page APP2.0, the operating weight of (4) 1¼" (1.04 lbs/ft), (4) 1½" (1.36 lbs/ft) type K copper gas pipes and (4) 2" type L copper water pipes (4.2 lbs/ft) is about 27 lbs/ft.

MASON WEST, INC.
1601 E. Miraloma Ave. Placentia, CA 92870
TEL (714) 630 - 0701, www.masonwest.com

Jiefu "Jeff" Zhang, SE
California SE No. S5270

PAGE
A11.4

PIPING DESIGN PROCEDURE (continued)

Step 3. **Determine Seismic Forces (lbs):**

From page A10.6 Note 3, the maximum transverse and longitudinal brace spacing for suspended type K and type L copper piping is specified in Section S (Pages S1.2.1 and S1.3.1). The maximum transverse brace spacing is governed by the lowest brace spacing, in this case, 2" type L drawn copper pipe with water. For Basement Level and Level 1 F_P of 0.32g, the 0.375g column lists 25 feet, for Level 2 F_P of 0.42g, the 0.5g column lists 22 feet, and for Level 3 F_P of 0.54g, the 0.625g column lists 20 feet. For this example, we will use 20 feet as the maximum transverse brace spacing for all levels. Per note 3 on pages S1.2.1 and S1.3.1, the maximum longitudinal brace spacing may be 3 times the transverse brace spacing, or 60 feet. We will limit it to 40 feet for this example.

Note: At this point, you have the option to calculate the seismic forces and loads on the hanger rods and complete this step or move on to step 4.

For Basement Level and Level 1,

F_P (Transverse) = 0.32 x 27.0 lbs/ft x 20 ft brace spacing = 173 lbs
F_P (Longitudinal) = 0.32 x 27.0 lbs/ft x 40 ft brace spacing = 346 lbs
F_{PV} = 0.14 x 27.0 lbs/ft x 8 ft support spacing = 30 lbs

Note: Fp does not need to be increased due to installation tolerances indicated in assembly details.

For seismic solid brace installations:

$T_{Rod} = F_P \tan(\text{brace angle}) + (27.0 \text{ lbs/ft} \times 8 \text{ ft} + F_{PV})*(⅔) = 337$ lbs.

Note: Brace angle = 45 degrees for this example. Longitudinal loads considered split evenly to each rod.

For seismic cable brace installations:

$T_{Rod} = (27.0 \text{ lbs/ft} \times 8 \text{ ft} + F_{PV})*(⅔) = 164$ lbs.

Note: In the case of pipes on trapeze, for seismic solid and cable brace T_{Rod} calculations, 2/3 of the total gravity load is assumed as the worst case on each hanger. If this is not the case, make the necessary adjustment.

Similarly for Levels 2 and 3, F_P, F_{PV} and T_{Rod} are as tabulated below.

Floor Level	F_P	F_{PV}	T_{ROD}(Solid)	T_{ROD}(Cable)
Basement	173 lbs	30 lbs	337 lbs	164 lbs
1	173 lbs	30 lbs	337 lbs	164 lbs
2	227 lbs	30 lbs	391 lbs	164 lbs
3	292 lbs	30 lbs	456 lbs	164 lbs

$C_{Rod} = F_P \tan(\text{brace angle}) + F_{PV} - 0.9Wp$
$= 173 \text{ lbs} \times \tan(45 \text{ degrees}) + (⅔)*30 \text{ lbs} - 0.9 \times (⅔)*(27.0 \text{ lbs/ft} \times 8 \text{ ft}) = 63$ lbs.

Note: If $C_{Rod} \leq 0$, rod stiffeners are not required.

Check the seismic clamps, MW-SCC-13 (for 1¼" copper), MW-SCC-15 (for 1½" copper) and MW-SCC-20 (for 2" copper) for 20 feet transverse spacing and 40 feet longitudinal brace spacing on sheet S3.1 for Type L drawn and sheet S3.2 for Type K drawn. All brace spacings in charts meet or exceed the necessary brace spacings.

MASON WEST, INC.
1601 E. Miraloma Ave. Placentia, CA 92870
TEL (714) 630 - 0701, www.masonwest.com

Jiefu "Jeff" Zhang, SE
California SE No. S5270

PAGE
A11.5

REVIEWED FOR CODE COMPLIANCE
CALIFORNIA BUILDING CODE, 2013
OSHPD
OPM-0043-13
BY: Jeffrey Y. Kikumoto

PIPING DESIGN PROCEDURE (continued)

Step 4. **Select Seismic Kit Installation, Hanger and Brace connection Details:**

For a set of pipes with operating weight of 27.0 lbs/ft, acceptable seismic kit installation, hanger and connection details from the charts in Section B for each level of the building are as tabulated below.

Seismic Solid (Rigid) Brace, Hanger and Brace connection Details

Floor Level	Fp	Section B Page	Tran/Long Spacing	Kit Installation Details			Trans./ Long. Hanger Conn. Desig.	All Dir. Hanger Conn. Desig.	Brace Conn. Desig.
				Transverse	Longitudinal	All-Directional			
Basement	0.32g	B1.13	20'/40'	F1.10	F1.11	F1.12	38G	38L	50E
1	0.32g	B1.13	20'/40'	F1.10	F1.11	F1.12	38G	38L	50E
2	0.42g	B1.13	20'/40'	F1.10	F1.11	F1.12	38G	38L	50E
3	0.54g	B1.14	15'/30'	F1.20	F1.21	F1.22	50J	50M	50G

Seismic Cable (Standard) Brace, Hanger and Brace connection Details

Floor Level	Fp	Section B Page	Tran/Long Spacing	Kit Installation Details			Hanger Conn. Desig.	Brace Conn. Desig.
				Transverse	Longitudinal	All-Directional		
Basement	0.32g	B1.16	20'/40'	F2.20	F2.21	F2.22	50E	50E
1	0.32g	B1.16	20'/40'	F2.20	F2.21	F2.22	50E	50E
2	0.42g	B1.16	20'/40'	F2.20	F2.21	F2.22	50E	50E
3	0.54g	B1.17	15'/30'	F2.20	F2.21	F2.22	50E	50G

For calculated F_P and T_{ROD} select the appropriate details in Section F, M and N by comparing the calculated values with the tabulated values indicated on each detail.

Step 5. **Select Trapeze Member (where applicable):**

For a set of pipes on trapeze weighing 27.0 lbs/ft supported by a trapeze member with a maximum span between hanger rods of 48 in. and the seismic accelerations calculated in step 2, go to the tables in Section T2 to find the allowable trapeze members for transverse, longitudinal and all-directional seismic braces for each level of the building. For transverse brace spacing of 20 feet and longitudinal/all-directional brace spacing of 40 feet:

Trapeze Member at Longitudinal and All-Directional Brace Locations

Floor Level	Fp	Section T Page	Longitudinal	All-Directional
Basement	0.32g	T2.2	(2) 13/16" Double Strut	(2) 13/16" Double Strut
1	0.32g	T2.2	(2) 13/16" Double Strut	(2) 13/16" Double Strut
2	0.42g	T2.3	3-1/4" Single Strut	3-1/4" Single Strut
3	0.54g	T2.4	3-1/4" Single Strut	3-1/4" Single Strut

Refer to page T2.0 for trapeze member at transverse brace locations; for these cases, member to be 1-5/8" Single Strut.

MASON WEST, INC.
1601 E. Miraloma Ave. Placentia, CA 92870
TEL (714) 630 - 0701, www.masonwest.com

Jiefu "Jeff" Zhang, SE
California SE No. S5270

PAGE
A11.6

REVIEWED FOR CODE COMPLIANCE
OSHPD
OPM-0043-13
06/23/2016
CALIFORNIA BUILDING CODE, 2013 EDITION

FIRE PROTECTION PIPING DESIGN PROCEDURE

Follow the five steps below to determine the seismic kit installation, hanger and brace connection details that pertain to a specific suspended piping system. An example is provided on the following pages.

Step 1. **Determine 'g' Forces:**
Calculate the lateral acceleration, F_P, and vertical acceleration, F_{PV}, in terms of 'g' using the equations outlined on page A10.0 for each level of the building.

Step 2. **Determine Operating Weight (lbs/ft or lbs):**
Determine the operating weight, W_P, of the distribution system (lbs/ft) to be seismically braced. Consider Zone of Influence (ZOI) effects from branch lines per NFPA 13, Annex 13. Refer to the tables on pages A11.11 and A11.12 for pipe weights. Per NFPA 13, W_P shall be taken as 1.15 times the weight of the water filled pipe.

Step 3. **Determine the Maximum Brace Spacing, S:**
Using the seismic 'g' force from Step 1 and the weight from Step 2, determine the maximum transverse brace spacing from the appropriate table on pages A11.11 and A11.12.

Step 4. **Determine Seismic Forces (lbs):**
Calculate the maximum lateral and vertical forces applied to the seismic brace system. Resolve the maximum lateral force to the brace, F_P, and maximum load on the hanger rod, T_{Rod}.

The resultant compression load on the hanger rod at seismic brace locations may be calculated to determine if rod stiffening is required.

Step 5. **Select Seismic Kit Installation, Hanger and Brace connection Details:**
Verify the details selected are correct by comparing the calculated lateral force, F_P, and load on the hanger rod, T_{Rod}, with the rated loads tabulated on the detail sheets. If F_P and T_{Rod} are less than or equal to the tabulated rated loads, the details are acceptable.

REVIEWED FOR CODE COMPLIANCE
osDpd
BY: Jeffrey Y. Kikumoto
DATE: 06/23/2016
CALIFORNIA BUILDING CODE, 2013

MASON WEST, INC.
1601 E. Miraloma Ave. Placentia, CA 92870
TEL (714) 630 - 0701, www.masonwest.com

Jiefu "Jeff" Zhang, SE
California SE No. S5270

PAGE
A11.7

FIRE PROTECTION PIPING DESIGN PROCEDURE (continued)

Example:

4"Ø schedule 40 steel pipe is suspended within a 3 story poured-in place concrete building with basement. The pipe is supported at every 15 feet. The elevation of each floor, including the basement, is 15 feet. The short period spectral acceleration, S_{DS}, listed on the contract structural drawings, is 1.02. The component importance factor, $I_P = 1.5$.

Note: When anchoring to concrete, allowable loads have been reduced by the concrete overstrength factor, Ωo, where applicable, in Sections M & N. Therefore, Ωo is not used when calculating applied seismic forces in this example.

Step 1. **Determine 'g' Forces**

Component amplification and response modification factors for steel pipe with grooved couplings are as follows:

$a_P = 2.5$; $R_P = 4.5$

Therefore,

$$F_P = (0.7)\frac{0.4(2.5)(1.02)W_P}{(4.5)/(1.5)}(1+2\frac{z}{h}) = 0.24(1+2\frac{z}{h})g$$

$$F_{P(min)} = (0.7)(0.3)(1.02)(1.5)W_P = 0.32g$$

$$F_{P(max)} = (0.7)(1.6)(1.02)(1.5)W_P = 1.71g$$

$$F_{PV} = (0.7)(0.2)(1.02)W_P = 0.14g$$

Tabulated below are the 'g' forces for each level of the building

Floor Level	F_P	F_{PV}
Basement	0.32g	0.14g
1	0.40g	0.14g
2	0.56g	0.14g
3	0.72g	0.14g

Note: We are expressing the seismic coefficient in terms of 'g' which is defined as C_p in NFPA 13.

Step 2. **Determine Operating Weight (lbs/ft):**

For this example, assume the combined weight of the main pipe and branch pipes within the Zone of Influence (ZOI) is 600 lbs.

OSHPD OPM-0043-13 BY: Jeffrey Y. Kikumoto DATE: 06/23/2016 CODE COMPLIANCE CALIFORNIA BUILDING CODE, 2013

FIRE PROTECTION PIPING DESIGN PROCEDURE (continued)

Step 3. **Determine the Maximum Brace Spacings**

The maximum transverse brace spacing for 4"Ø steel pipe is 40 feet. However, we must check the pipe for the combined load of the main pipe and branch lines of 600 lbs using the appropriate seismic coefficient 'g' table on page A11.12.

From Step 2, the maximum 'g' force of 0.72 occurs on level 3. Go to Table 1 on page A11.12 for maximum 'g' of 0.75. For 4"Ø pipe at 40 foot spacing, the maximum weight, W_P, is 1526 lbs. Since this is greater than 600 lbs, the pipe can be braced in the transverse direction at 40 feet maximum spacing.

The maximum longitudinal brace spacing of 4"Ø pipe is 80 feet. However, we will limit the brace spacing to 60 feet for this example.

Step 4. **Determine Seismic Forces (lbs):**

For Basement Level,

F_P(Transverse) = 0.32 x 600 lbs x 1.15 = 221 lbs
F_P(Longitudinal) = 0.32 x 16.5 lbs/ft x 1.15 x 60 ft brace spacing = 317 lbs
F_{PV} = 0.14 x 16.5 lbs/ft x 1.15 x 15 ft support spacing = 40 lbs

Note: Fp does not need to be increased due to installation tolerances indicated in assembly details.

For seismic solid brace installations:

T_{Rod}(Transverse) = F_P(Transverse) tan (brace angle) + (16.5 lbs/ft x 1.15 x 15 ft + F_{PV}) = 546 lbs.

T_{Rod}(Longitudinal) = F_P(Longitudinal) tan (brace angle) + (16.5 lbs/ft x 1.15 x 15 ft + F_{PV}) = 642 lbs.

Note: Brace angle = 45 degrees for this example.

For seismic cable brace installations:

T_{Rod} = (16.5 lbs/ft x 1.15 x 15 ft + F_{PV}) = 325 lbs.

Similarly for Levels 1, 2 and 3, F_P, F_{PV} and T_{Rod} are as tabulated below.

Floor Level	F_P (Transverse)	F_P (Longitudinal)	F_{PV}	T_{Rod}(Solid -Tran)	T_{Rod}(Solid-Long)	T_{Rod}(Cable)
Basement	221 lbs	317 lbs	40 lbs	546 lbs	642 lbs	325 lbs
1	276 lbs	455 lbs	40 lbs	601 lbs	780 lbs	325 lbs
2	386 lbs	638 lbs	40 lbs	711 lbs	963 lbs	325 lbs
3	497 lbs	820 lbs	40 lbs	822 lbs	1145 lbs	325 lbs

C_{Rod} = $F_P$tan (brace angle) + F_{PV} - 0.9Wp
= 317 lbs x tan (45 degrees) + 40 lbs - 0.9 x (16.5 lbs/ft x 1.15 x 15 ft) = 101 lbs.

Note: Brace Note: If $C_{Rod} \leq 0$, rod stiffeners are not required.

REVIEWED FOR CODE COMPLIANCE
CALIFORNIA BUILDING CODE, 2013
ospd
OPM-0043-13
BY: Jeffrey Y. Kikumoto
DATE: 06/23/2016

MASON WEST, INC.
1601 E. Miraloma Ave. Placentia, CA 92870
TEL (714) 630 - 0701, www.masonwest.com

Jiefu "Jeff" Zhang, SE
California SE No. S5270

PAGE
A11.9

FIRE PROTECTION PIPING DESIGN PROCEDURE (continued)

Step 5. **Select Seismic Kit Installation, Hanger, and Brace connection Details:**

Compare F_P values when using pipe brace details from Section C and brace connection details from Section N. Compare T_{Rod} values with Ta when using hanger connection details from Section M. The table below summarizes details that are applicable for each floor.

Seismic Solid (Rigid) Brace, Hanger and Brace connection Details

Floor Level	Fp	Tran/Long Spacing	Kit Installation Details			Trans. Hanger Conn. Desig.	Long. Hanger Conn. Desig.	All Dir. Hanger Conn. Desig.	Trans. Brace Conn. Desig.	Long./ All Dir. Brace Conn. Desig.
			Transverse	Longitudinal	All-Directional					
Basement	0.32g	40'/60'	C1.30	C1.32	C1.34	63F	63G	63H	63C	63D
1	0.40g	40'/60'	C1.30	C1.32	C1.34	63G	63H	63J	63D	63E
2	0.56g	40'/60'	C1.30	C1.33	C1.35	63H	63J	63K	63E	63G
3	0.72g	40'/60'	C1.30	C1.33	N/A	63H	63L	63L	63F	63H

Seismic Cable (Standard) Brace, Hanger and Brace connection Details

Floor Level	Fp	Tran/Long Spacing	Kit Installation Details			Hanger Conn. Desig.	Trans. Brace Conn. Desig.	Long./ All Dir. Brace Conn. Desig.
			Transverse	Longitudinal	All-Directional			
Basement	0.32g	40'/60'	C2.30	C2.31	C2.32	63D	50C	50D
1	0.40g	40'/60'	C2.30	C2.31	C2.32	63D	50D	50E
2	0.56g	40'/60'	C2.30	C2.41	C2.42	63D	75E	63G
3	0.72g	40'/60'	C2.30	C2.41	C2.42	63D	75F	63H

REVIEWED FOR CODE COMPLIANCE
CALIFORNIA BUILDING CODE, 2013
osDpd
OPM-0043-13
Reviewed by: Jeffrey Kikumoto
DATE: 06/23/2016

MASON WEST, INC.
1601 E. Miraloma Ave. Placentia, CA 92870
TEL (714) 630 - 0701, www.masonwest.com

Jiefu "Jeff" Zhang, SE
California SE No. S5270

PAGE
A11.10

MAXIMUM TRANSVERSE BRACE SPACING FOR FIRE PROTECTION PIPING

Schedule 10 Steel Pipe

Table 1

Pipe Size (in)	Weight/ft (lbs/ft)	Max Gravity Support Spacing (ft)	Maximum Weight Using ZOI Method, W_P (lbs)									
			Max 'g' force 0.75					Max 'g' force 1.0				
			Max. Transverse Brace Spacing (ft)					Max. Transverse Brace Spacing (ft)				
			20	25	30	35	40	20	25	30	35	40
1	1.84	12	115	92	75	N/A	N/A	86	69	56	N/A	N/A
1¼	2.55	12	193	154	127	N/A	N/A	145	116	95	N/A	N/A
1½	3.09	15	256	205	168	N/A	N/A	192	154	126	N/A	N/A
2	4.28	15	416	333	273	N/A	N/A	312	250	205	N/A	N/A
2½	5.97	15	682	546	447	N/A	N/A	512	409	335	N/A	N/A
3	8.0	15	1037	829	680	582	488	778	622	510	437	366
4	11.9	15	1756	1405	1151	987	826	1317	1054	863	740	620
5	17.5	15	3027	2421	1984	1700	1424	2270	1816	1488	1275	1068
6	23.2	15	4344	3475	2847	2440	2044	3258	2606	2135	1830	1533
8	40.4	15	10314	8251	6760	5794	4852	7736	6188	5070	4346	3639

Table 2

Pipe Size (in)	Weight/ft (lbs/ft)	Max Gravity Support Spacing (ft)	Maximum Weight Using ZOI Method, W_P (lbs)									
			Max 'g' force 1.25					Max 'g' force 1.75				
			Max. Transverse Brace Spacing (ft)					Max. Transverse Brace Spacing (ft)				
			20	25	30	35	40	20	25	30	35	40
1	1.84	12	69	55	45	N/A	N/A	49	39	32	N/A	N/A
1¼	2.55	12	116	93	76	N/A	N/A	83	66	54	N/A	N/A
1½	3.09	15	154	123	101	N/A	N/A	110	88	72	N/A	N/A
2	4.28	15	250	200	164	N/A	N/A	178	143	117	N/A	N/A
2½	5.97	15	409	328	268	N/A	N/A	292	234	192	N/A	N/A
3	8.0	15	622	498	408	349	293	444	355	291	250	209
4	11.9	15	1054	843	691	592	496	753	602	493	423	354
5	17.5	15	1816	1453	1190	1020	854	1297	1038	850	729	610
6	23.2	15	2606	2085	1708	1464	1226	1862	1489	1220	1046	876
8	40.4	15	6188	4951	4056	3477	2911	4420	3536	2897	2483	2079

REFER TO EXAMPLE ON PAGE A11.9 BEFORE USING THESE TABLES.

REVIEWED FOR CODE COMPLIANCE
OSHPD
OPM-0043-13
BY: Jeffrey Y. Kikumoto
DATE 06/23/2016
CALIFORNIA BUILDING CODE 2013

MASON WEST, INC.
1601 E. Miraloma Ave. Placentia, CA 92870
TEL (714) 630 - 0701, www.masonwest.com

Jiefu "Jeff" Zhang, SE
California SE No. S5270

MAXIMUM TRANSVERSE BRACE SPACING FOR FIRE PROTECTION PIPING

Schedule 40 Steel Pipe

Table 1

Pipe Size (in)	Weight/ft (lbs/ft)	Max Gravity Support Spacing (ft)	Maximum Weight Using ZOI Method, W_P (lbs)									
			Max 'g' force					Max 'g' force				
			0.75					1.0				
			Max. Transverse Brace Spacing (ft)					Max. Transverse Brace Spacing (ft)				
			20	25	30	35	40	20	25	30	35	40
1	2.1	12	133	106	87	N/A	N/A	100	80	65	N/A	N/A
1¼	3.0	12	236	189	155	N/A	N/A	177	141	116	N/A	N/A
1½	3.6	15	324	260	213	N/A	N/A	243	195	159	N/A	N/A
2	5.2	15	558	447	366	N/A	N/A	419	335	274	N/A	N/A
2½	7.9	15	1075	860	705	N/A	N/A	806	645	529	N/A	N/A
3	10.8	15	1741	1393	1141	978	819	1306	1045	856	734	614
4	16.5	15	3245	2596	2127	1823	1526	2433	1947	1595	1367	1145
5	23.7	15	5512	4410	3613	3097	2593	4134	3307	2710	2323	1945
6	31.5	15	8578	6862	5622	4819	4035	6433	5147	4217	3614	3026
8	50	15	16979	13584	11129	9539	7988	12735	10188	8347	7154	5991
10	75	15	30214	24171	19803	16974	14213	22660	18128	14852	12730	10660
12	103	15	44090	35272	28898	24770	20741	33068	26454	21674	18577	15556

Table 2

Pipe Size (in)	Weight/ft (lbs/ft)	Max Gravity Support Spacing (ft)	Maximum Weight Using ZOI Method, W_P (lbs)									
			Max 'g' force					Max 'g' force				
			1.25					1.75				
			Max. Transverse Brace Spacing (ft)					Max. Transverse Brace Spacing (ft)				
			20	25	30	35	40	20	25	30	35	40
1	2.1	12	80	64	52	N/A	N/A	57	46	37	N/A	N/A
1¼	3.0	12	141	113	93	N/A	N/A	101	81	66	N/A	N/A
1½	3.6	15	195	156	128	N/A	N/A	139	111	91	N/A	N/A
2	5.2	15	335	268	220	N/A	N/A	239	191	157	N/A	N/A
2½	7.9	15	645	516	423	N/A	N/A	461	369	302	N/A	N/A
3	10.8	15	1045	836	685	587	491	746	597	489	419	351
4	16.5	15	1947	1557	1276	1094	916	1391	1112	911	781	654
5	23.7	15	3307	2646	2168	1858	1556	2362	1890	1548	1327	1111
6	31.5	15	5147	4117	3373	2891	2421	3676	2941	2409	2065	1729
8	50	15	10188	8150	6677	5723	4793	7277	5822	4770	4088	3423
10	75	15	18128	14502	11882	10184	8528	12949	10359	8487	7275	6091
12	103	15	26454	21163	17339	14862	12445	18896	15117	12385	10616	8889

REFER TO EXAMPLE ON PAGE A11.9 BEFORE USING THESE TABLES.

REVIEWED FOR CODE COMPLIANCE
CITY OF LOS ANGELES BUILDING DEPT.
OPM-0043-13
BY: Jeffrey Kikumoto
DATE: 06/23/2016

MASON WEST, INC.
1601 E. Miraloma Ave. Placentia, CA 92870
TEL (714) 630 - 0701, www.masonwest.com

Jiefu "Jeff" Zhang, SE
California SE No. S5270

PAGE
A11.12

LAYOUT OF SEISMIC BRACES FOR INDIVIDUALLY SUSPENDED PIPING

Step 1. Separate the layout of the system into individual straight runs. A straight run is defined as a section of the utility between changes in direction. If an offset(s) occurs between changes of direction it may be neglected if the distance perpendicular to the run is less than the offset length, $\frac{S}{10}$, where S is the maximum transverse brace spacing tabulated in Section S.

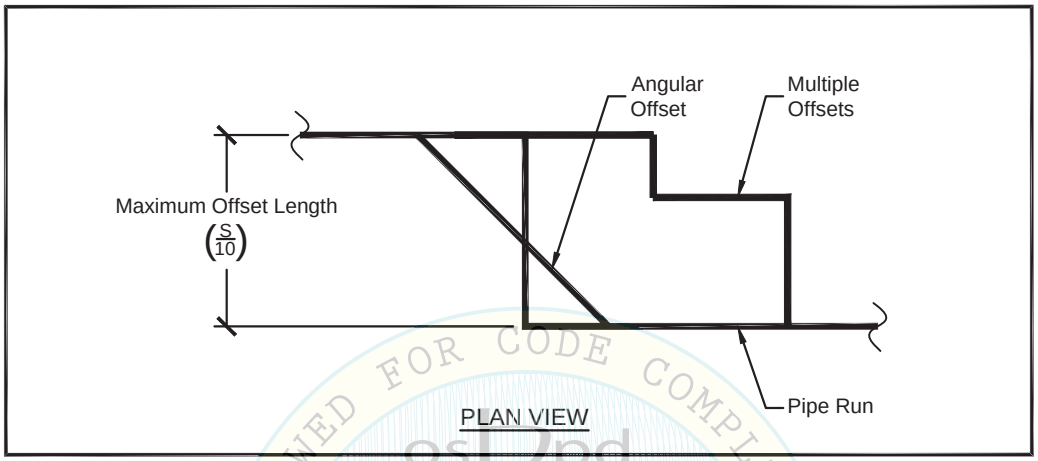

REVIEWED FOR CODE COMPLIANCE OSHPD
OPM-0043-13
BY: Jeffrey Y. Kikumoto
DATE: 06/23/2016
CALIFORNIA BUILDING CODE 2013

Step 2. Each straight run must be braced in the transverse direction (perpendicular to the run) at each end.

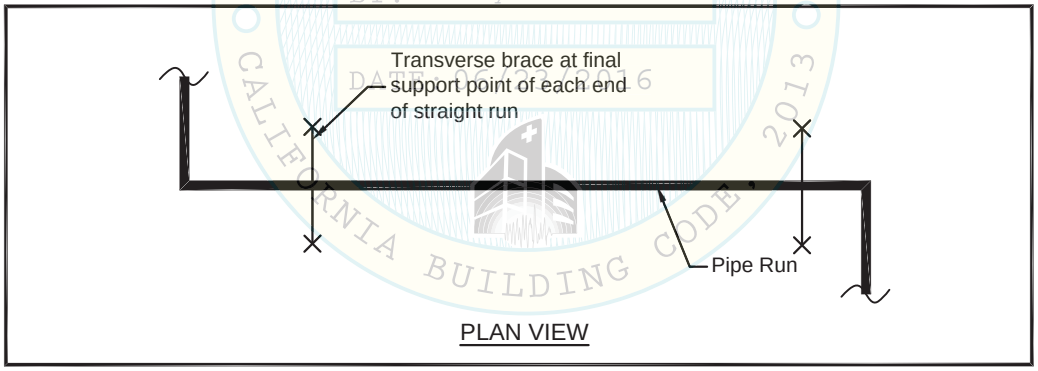

MASON WEST, INC.
1601 E. Miraloma Ave. Placentia, CA 92870
TEL (714) 630 - 0701, www.masonwest.com

Jiefu "Jeff" Zhang, SE
California SE No. S5270

PAGE
A12.0

LAYOUT OF SEISMIC BRACES FOR INDIVIDUALLY SUSPENDED PIPING (continued)

Step 3. Add transverse braces, if required, to limit the spacing(s) to the maximum spacing indicated in Section S.

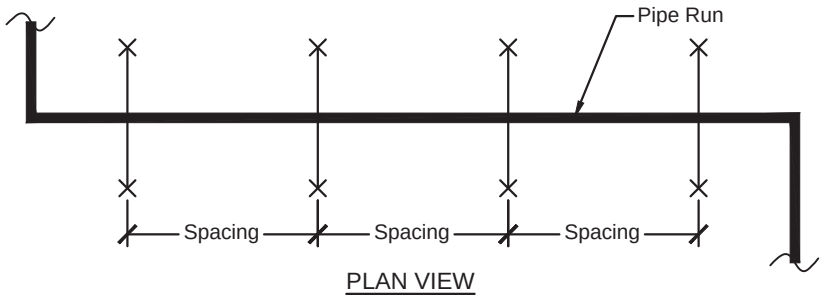

PLAN VIEW

Spacing ≤ **Maximum transverse brace spacing**

Step 4. Each straight run must be braced in the longitudinal direction (parallel to the run) with at least one brace. Transverse braces within the maximum offset length discussed in Step 1 may be used in addition to or in lieu of independent longitudinal braces. The length of pipe around a 90 degree turn (indicated as 'P' below) longitudinally braced from a transverse brace = L-0.5T-A, where:

L = Maximum Allowable Longitudinal Brace spacing (From Section S)
T = The distance between Transverse Braces
A = Offset Length ≤ Maximum Offset Length $\left(\frac{S}{10}\right)$

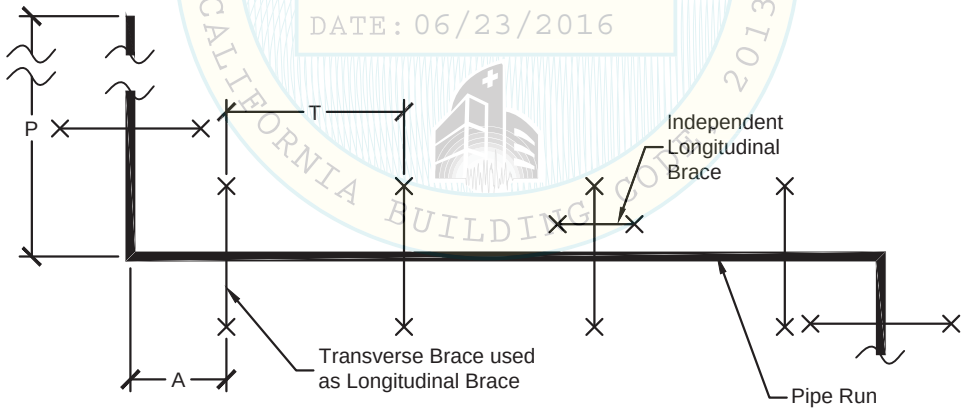

PLAN VIEW

OPM-0043-13
DATE: 06/23/2016
CALIFORNIA BUILDING CODE COMPLIANCE 2013

MASON WEST, INC.
1601 E. Miraloma Ave. Placentia, CA 92870
TEL (714) 630 - 0701, www.masonwest.com

Jiefu "Jeff" Zhang, SE
California SE No. S5270

PAGE
A12.1

LAYOUT OF SEISMIC BRACES FOR INDIVIDUALLY SUSPENDED PIPING (continued)

Step 5. Multiple changes in direction may be treated as one complete system. Straight runs greater than the maximum offset length require 2 transverse braces. Straight runs less than the maximum offset length may require as few as one or no braces. (See layout below)

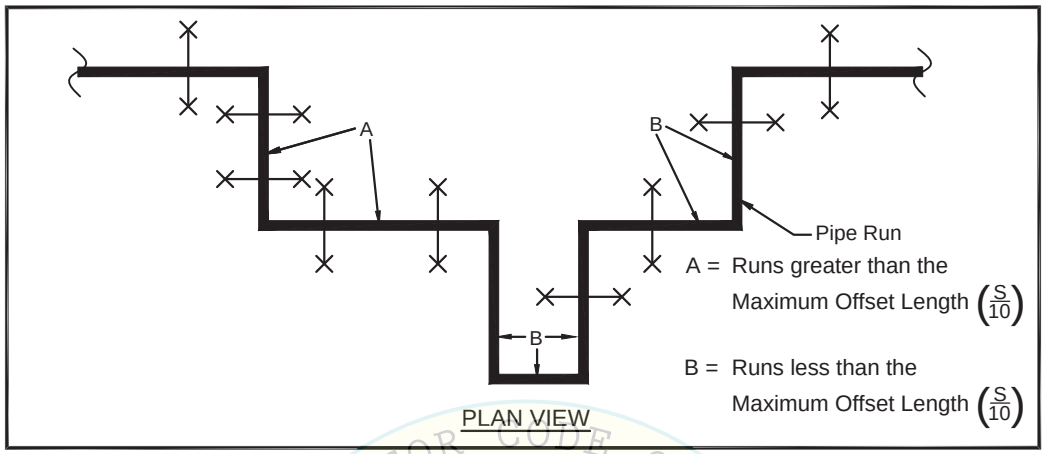

Step 6. Vertical drops to equipment must be restrained with a transverse brace at the final support point before the vertical drop. The distance from the transverse brace to the drop must be within the maximum offset length of the system. The maximum allowable length of the system braced from the transverse brace to the flexible connector is equal to ½ of the maximum transverse brace spacing indicated in Section S. If this distance is greater than ½ of the maximum transverse brace spacing, an additional brace is required at the end of the vertical drop by attaching to the floor. Consideration must be given to seismic relative displacements (SRD) imposed on pipe when braced to the floor.

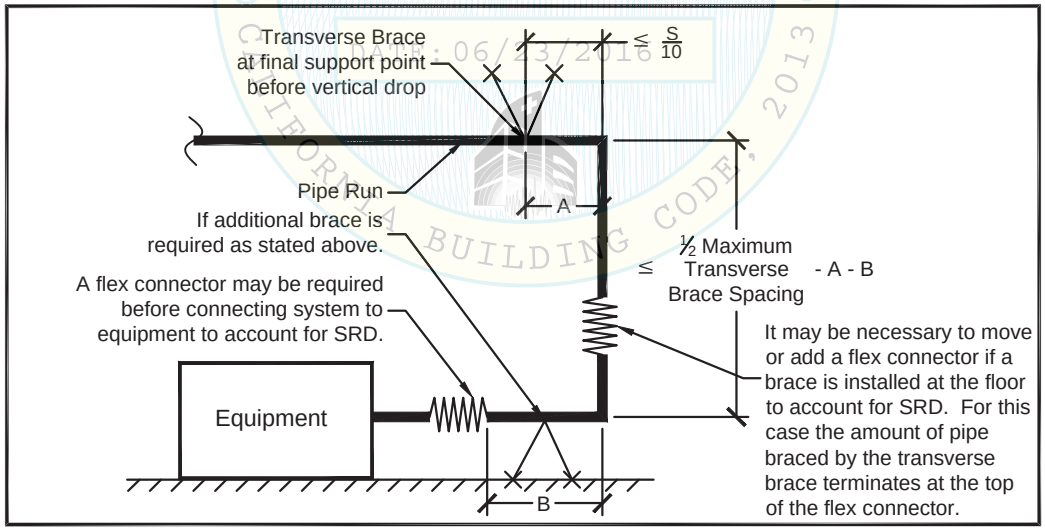

OSHPD PREAPPROVED OPM-0043-13 06/23/2016 CALIFORNIA BUILDING CODE, 2013

MASON WEST, INC.
1601 E. Miraloma Ave. Placentia, CA 92870
TEL (714) 630 - 0701, www.masonwest.com

Jiefu "Jeff" Zhang, SE
California SE No. S5270

PAGE
A12.2

LAYOUT OF SEISMIC BRACES FOR TRAPEZE SUSPENDED PIPING (continued)

Step 1a. Separate the layout of the system into individual straight runs. A straight run is defined as a section of the utility between changes in direction. If an offset(s) occurs between changes of direction it may be neglected if the distance perpendicular to each pipe run is less than the offset length, $\frac{S}{10}$, where S is the maximum transverse brace spacing tabulated in Section S.

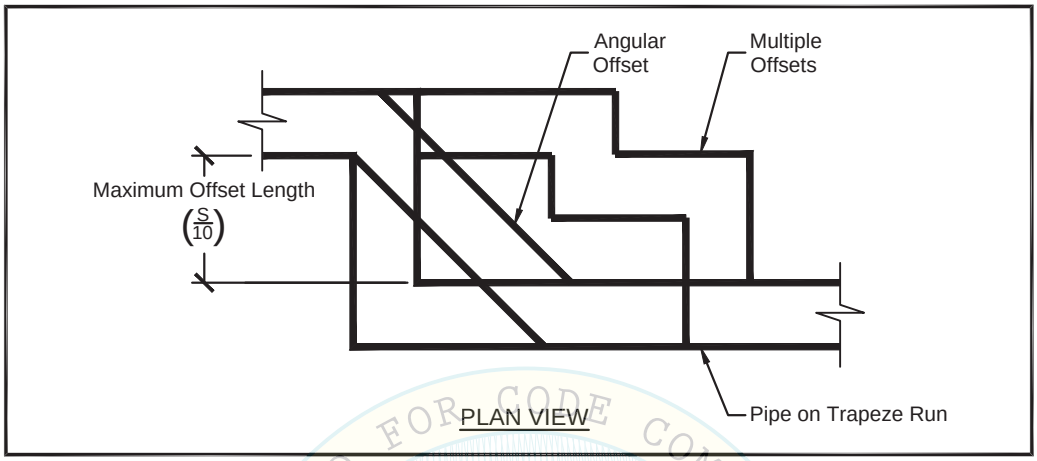

Step 2a. Each straight run must be braced in the transverse direction (perpendicular to the run) at each end.

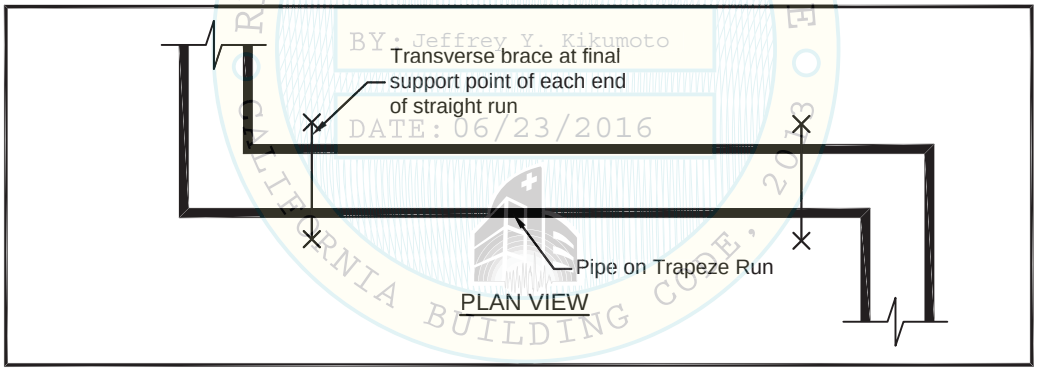

REVIEWED FOR CODE COMPLIANCE • 2013 CALIFORNIA BUILDING CODE
OSHPD
OPM-0043-13
BY: Jeffrey Y. Kikumoto
DATE: 06/23/2016

MASON WEST, INC.
1601 E. Miraloma Ave. Placentia, CA 92870
TEL (714) 630 - 0701, www.masonwest.com

Jiefu "Jeff" Zhang, SE
California SE No. S5270

PAGE
A12.3

LAYOUT OF SEISMIC BRACES
TRAPEZE SUSPENDED FOR PIPING (continued)

Step 3a. Add transverse braces, if required, to limit the spacing(s) to the maximum spacing indicated in Section S.

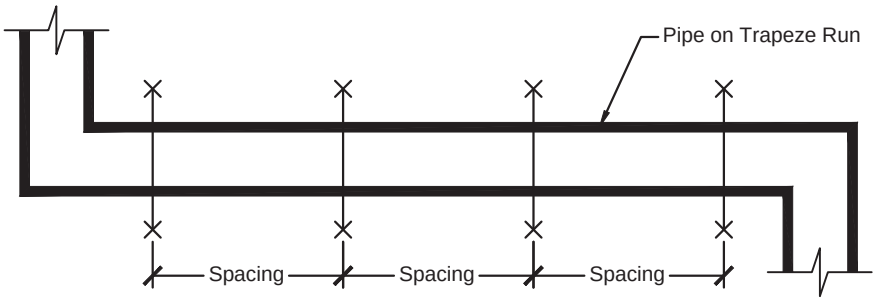

PLAN VIEW

Spacing ≤ **Maximum transverse brace spacing**

Step 4a. Each straight run must be braced in the longitudinal direction (parallel to the run) with at least one brace. Transverse braces within the maximum offset length discussed in Step 1 may be used in addition to or in lieu of independent longitudinal braces. The length of pipe around a 90 degree turn (indicated as 'P' below) longitudinally braced from a transverse brace = L-0.5T-A, where:

L = Maximum Allowable Longitudinal Brace spacing (From Section S)
T = The distance between Transverse Braces
A = Offset Length of Each Pipe ≤ Maximum Offset Length $\left(\frac{S}{10}\right)$

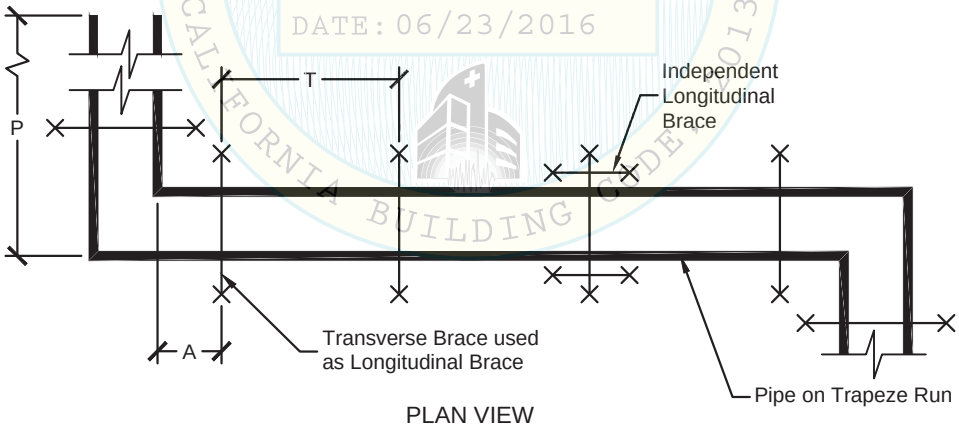

PLAN VIEW

OSHPD
OPM-0043-13
BY: Jeffrey Y. Kikumoto
DATE: 06/23/2016
REVIEWED FOR CODE COMPLIANCE
CALIFORNIA BUILDING CODE 2013

MASON WEST, INC.
1601 E. Miraloma Ave. Placentia, CA 92870
TEL (714) 630 - 0701, www.masonwest.com

Jiefu "Jeff" Zhang, SE
California SE No. S5270

PAGE
A12.4

LAYOUT OF SEISMIC BRACES FOR TRAPEZE SUSPENDED PIPING (continued)

Step 5a. Multiple changes in direction may be treated as one complete system. Straight runs greater than the maximum offset length require 2 transverse braces. Straight runs less than the maximum offset length may require as few as one or no braces. (See layout below)

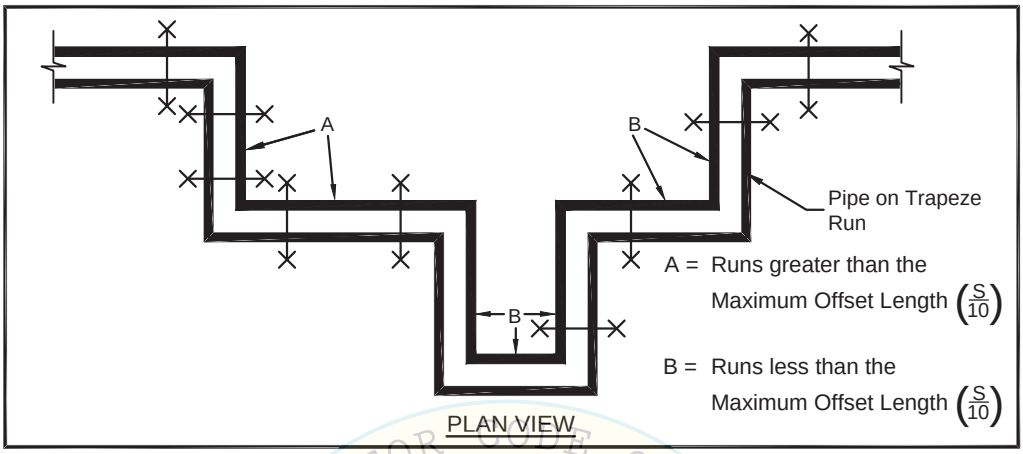

Step 6a. Vertical drops to equipment must be restrained with a transverse brace at the final support point before the vertical drop. The distance from the transverse brace to the drop must be within the maximum offset length of the system. The maximum allowable length of the system braced from the transverse brace to the flexible connector is equal to ½ of the maximum transverse brace spacing indicated in Section S. If this distance is greater than ½ of the maximum transverse brace spacing, an additional brace is required at the end of the vertical drop by attaching to the floor. Consideration must be given to seismic relative displacements (SRD) imposed on the pipe when braced to the floor.

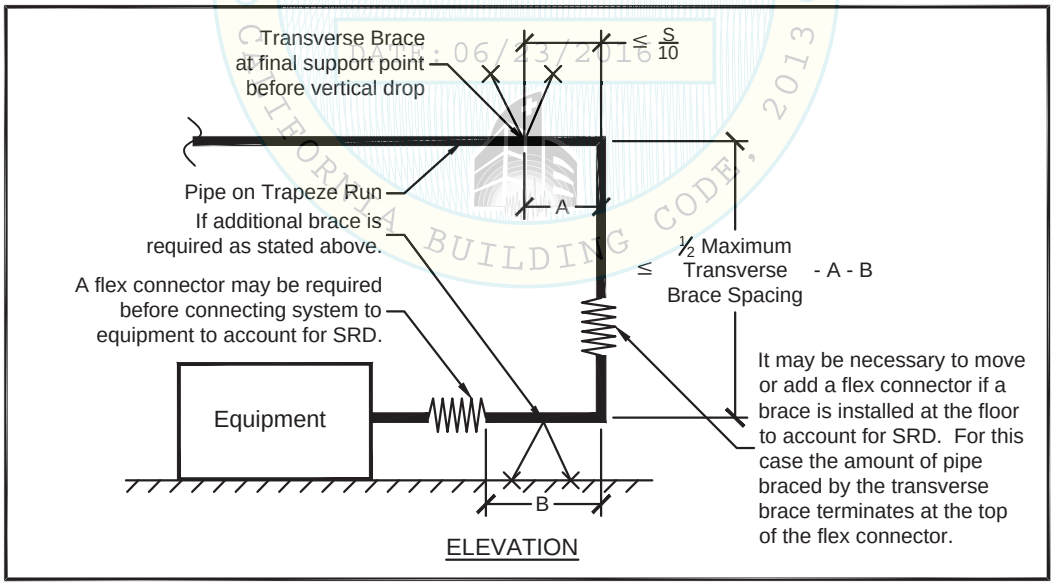

OPM-0043-13 Reviewed for Code Compliance 06/23/2016 CALIFORNIA BUILDING CODE, 2013

MASON WEST, INC.
1601 E. Miraloma Ave. Placentia, CA 92870
TEL (714) 630 - 0701, www.masonwest.com

Jiefu "Jeff" Zhang, SE
California SE No. S5270

PAGE
A12.5

LAYOUT OF SEISMIC BRACES FOR FIRE PROTECTION PIPING

Step 1. Separate the layout of the system into individual straight runs. A straight run is defined as a section of the utility between changes in direction. If an offset(s) occurs between changes of direction it may be neglected if the distance perpendicular to the run is less than 24".

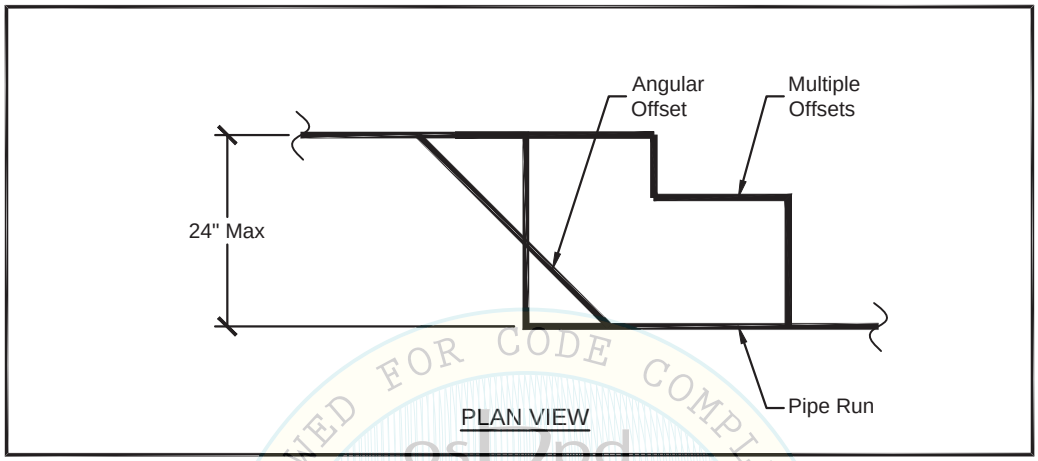

PLAN VIEW

REVIEWED FOR CODE COMPLIANCE
OPM-0043-13
BY: Jeffrey Y. Kikumoto
DATE: 06/23/2016
CALIFORNIA BUILDING CODE 2013

Step 2. Each straight run must be braced in the transverse direction (perpendicular to the run) at each end.

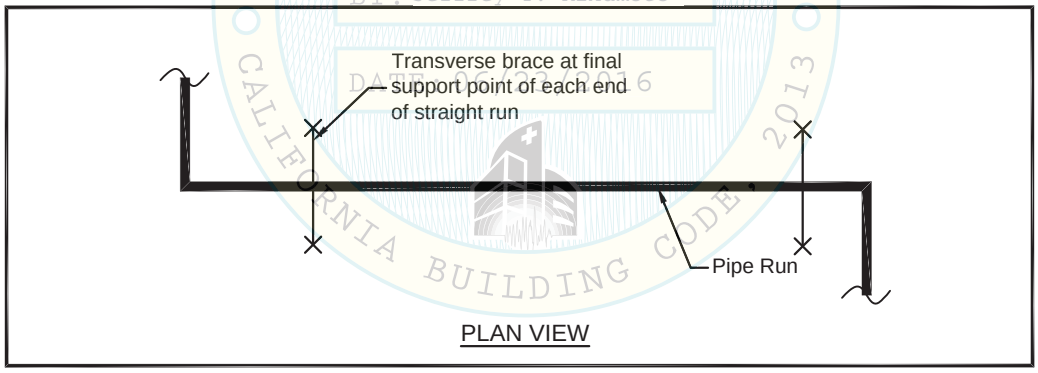

PLAN VIEW

MASON WEST, INC.
1601 E. Miraloma Ave. Placentia, CA 92870
TEL (714) 630 - 0701, www.masonwest.com

Jiefu "Jeff" Zhang, SE
California SE No. S5270

PAGE
A12.6

LAYOUT OF SEISMIC BRACES FOR FIRE PROTECTION PIPING (continued)

Step 3. Add transverse braces, if required, to limit the spacing(s) to the maximum spacing indicated in Section S.

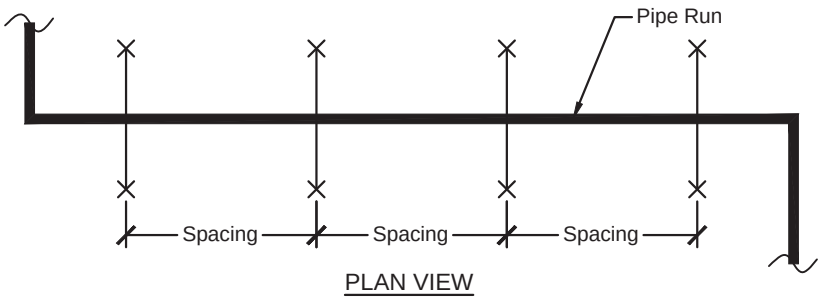

PLAN VIEW

Spacing ≤ **Maximum transverse brace spacing**

Step 4. Each straight run must be braced in the longitudinal direction (parallel to the run) with at least one brace. Transverse braces within the maximum offset length discussed in Step 1 may be used in addition to or in lieu of independent longitudinal braces. The length of pipe around a 90 degree turn (indicated as 'P' below) longitudinally braced from a transverse brace = L-0.5T-A, where:

L = Maximum Allowable Longitudinal Brace spacing (From Section S)
T = The distance between Transverse Braces
A = Offset Length ≤ Maximum Offset Length = 24"

OPM-0043-13
BY: Jeffrey Y. Kikumoto
DATE: 06/23/2016

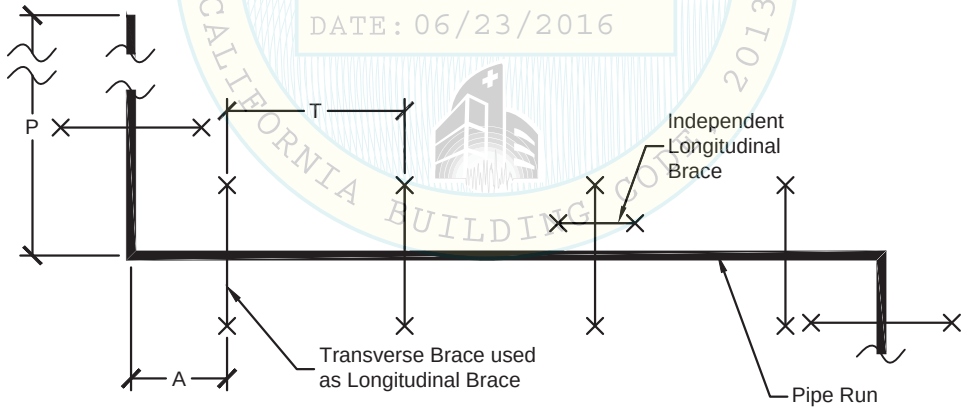

PLAN VIEW

MASON WEST, INC.
1601 E. Miraloma Ave. Placentia, CA 92870
TEL (714) 630 - 0701, www.masonwest.com

Jiefu "Jeff" Zhang, SE
California SE No. S5270

PAGE
A12.7

LAYOUT OF SEISMIC BRACES FOR FIRE PROTECTION PIPING (continued)

Step 5. Multiple changes in direction may be treated as one complete system. Straight runs greater than the maximum offset length require 2 transverse braces. Straight runs less than the maximum offset length may require as few as one or no braces. (See layout below)

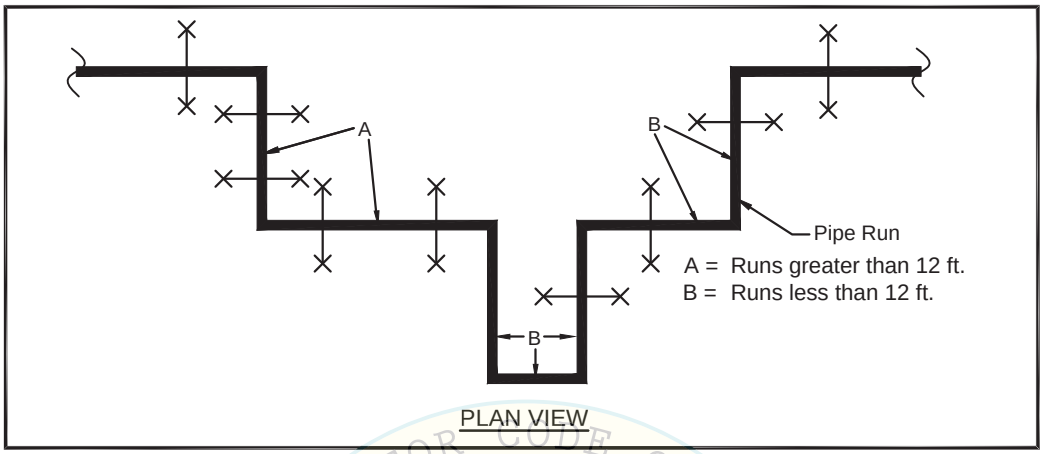

PLAN VIEW

Step 6. Vertical drops to equipment must be restrained with a transverse brace at the final support point before the vertical drop. The distance from the transverse brace to the drop must be within the maximum offset length of the system. The maximum allowable length of the system braced from the transverse brace to the flexible connector is equal to ½ of the maximum transverse brace spacing. If this distance is greater than ½ of the maximum transverse brace spacing, an additional brace is required at the end of the vertical drop by attaching to the floor. Consideration must be given to seismic relative displacements (SRD) imposed on pipe when braced to the floor.

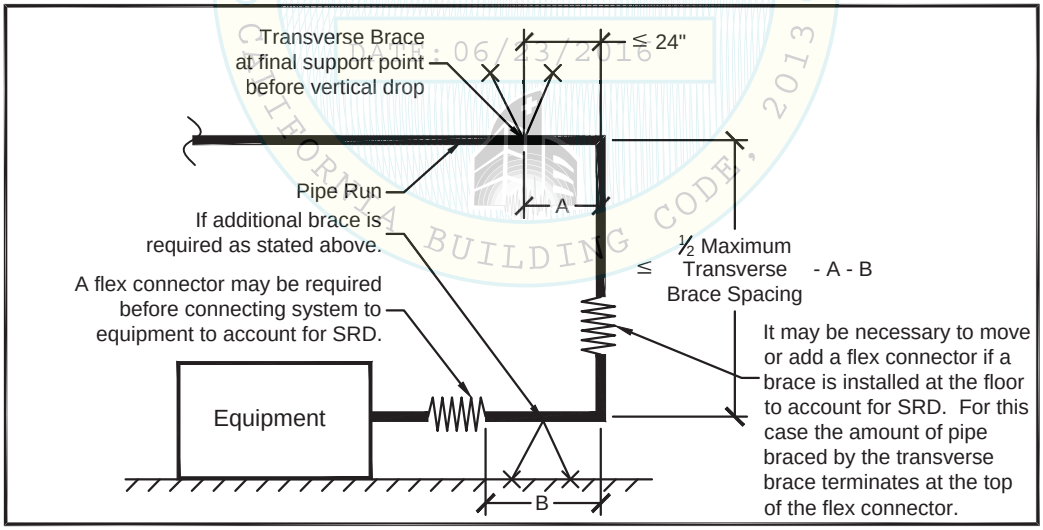

OSHPD PREAPPROVED FOR CODE COMPLIANCE
OPM-0043-13
06/23/2016
By Jeffrey S. Kikumoto
CALIFORNIA BUILDING CODE, 2013

MASON WEST, INC.
1601 E. Miraloma Ave. Placentia, CA 92870
TEL (714) 630 - 0701, www.masonwest.com

Jiefu "Jeff" Zhang, SE
California SE No. S5270

PAGE
A12.8

THIS PAGE INTENTIONALLY LEFT BLANK.

MASON WEST, INC.
1601 E. Miraloma Ave. Placentia, CA 92870
TEL (714) 630 - 0701, www.masonwest.com

Jiefu "Jeff" Zhang, SE
California SE No. S5270

PAGE
A12.9

12" RULE FOR SUSPENDED PIPING

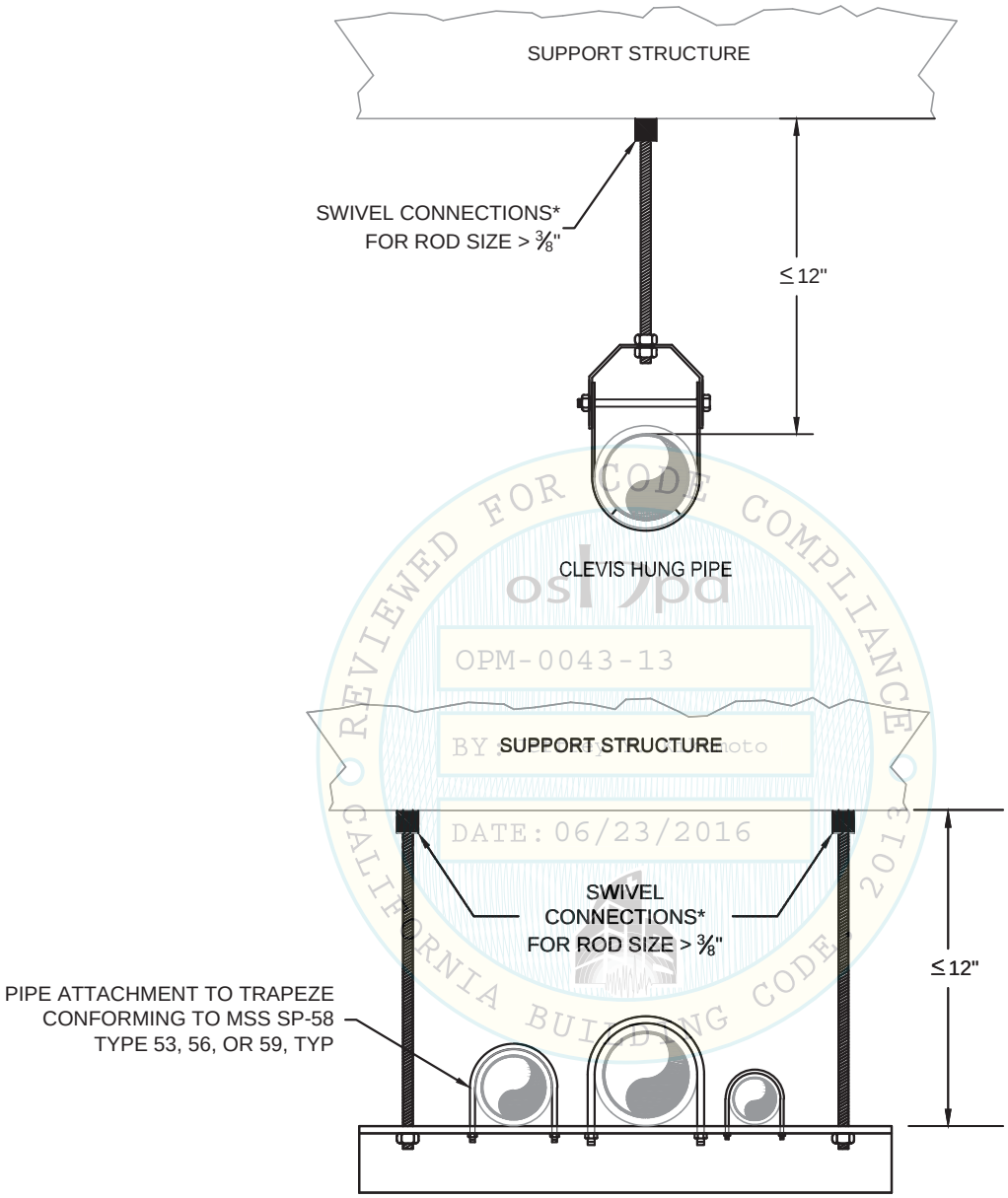

PIPES ON TRAPEZE

REVIEWED FOR CODE COMPLIANCE
CALIFORNIA BUILDING CODE 2013
OPM-0043-13
BY Jeffrey Kikumoto
DATE: 06/23/2016

*NOTE: CONNECTIONS COMPLYING INCLUDE SWIVEL JOINTS, EYE BOLTS, ETC.

MASON WEST, INC.
1601 E. Miraloma Ave. Placentia, CA 92870
TEL (714) 630 - 0701, www.masonwest.com

Jiefu "Jeff" Zhang, SE
California SE No. S5270

PAGE
A13.0

TRANSVERSE BRACE ALLOWABLE ANGLE VARIATIONS IN PLAN FOR INDIVIDUALLY SUSPENDED PIPE

THE ANGLE VARIATION MAY INCREASE BEYOND 2.5 DEGREES UP TO 15 DEGREES PROVIDED THE TRANSVERSE BRACES ARE SKEWED IN THE SAME DIRECTION AND A LONGITUDINAL BRACE OCCURS OPPOSITE THE SKEWED ANGLE DIRECTION AS SHOWN BELOW.

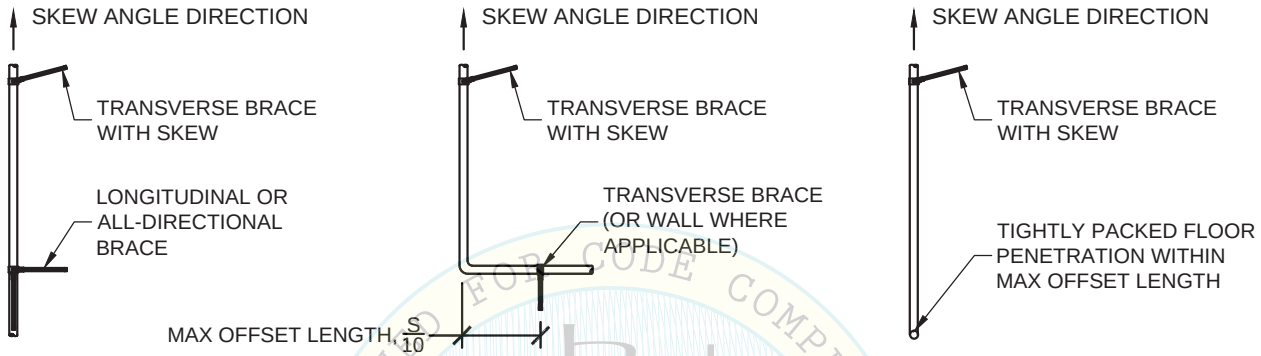

SOLID BRACE

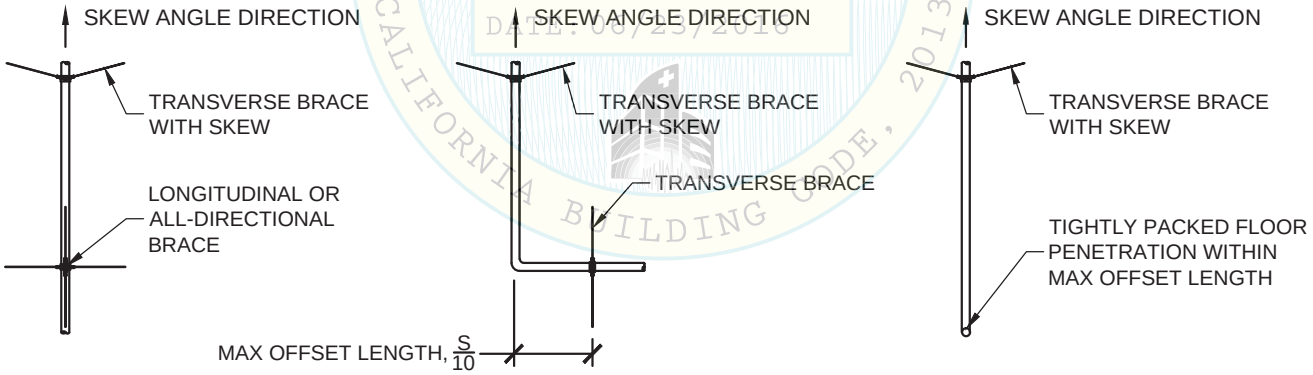

CABLE BRACE

NOTE: ANY OR ALL BRACE LOCATIONS ARE PERMITTED TO USE THE ANGLE VARIATION TO MEET FIELD CONDITIONS.

REVIEWED FOR CODE COMPLIANCE
CALIFORNIA BUILDING CODE, 2013
OSHPD
OPM-0043-13
BY: Jeffrey Y. Kikumoto
DATE: 06/23/2016

MASON WEST, INC.
1601 E. Miraloma Ave. Placentia, CA 92870
TEL (714) 630 - 0701, www.masonwest.com

Jiefu "Jeff" Zhang, SE
California SE No. S5270

PAGE
A14.0

TRANSVERSE BRACE ALLOWABLE ANGLE VARIATIONS IN PLAN FOR PIPE ON TRAPEZE

THE ANGLE VARIATION MAY INCREASE BEYOND 2.5 DEGREE UP TO 15 DEGREE PROVIDED THE TRANSVERSE BRACES ARE SKEWED IN THE SAME DIRECTION AND A LONGITUDINAL BRACE OCCURS OPPOSITE THE SKEWED ANGLE DIRECTION AS SHOWN BELOW.

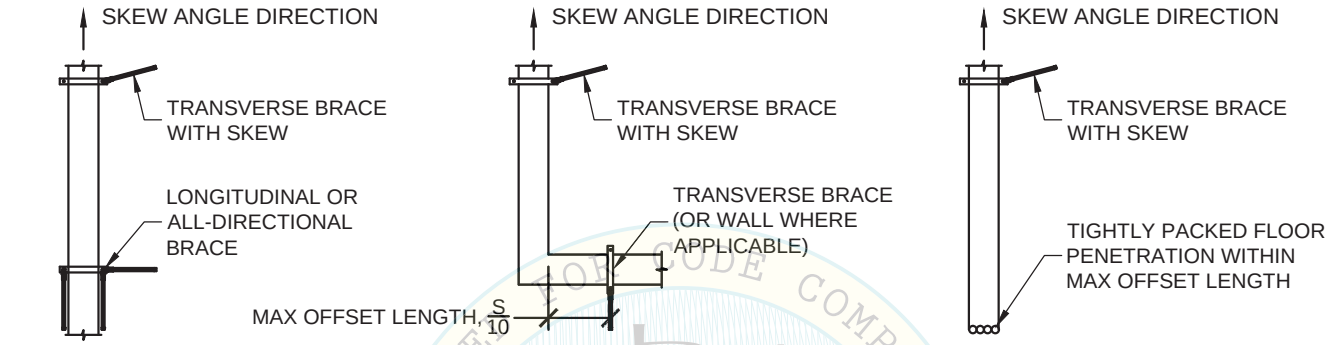

SOLID BRACE

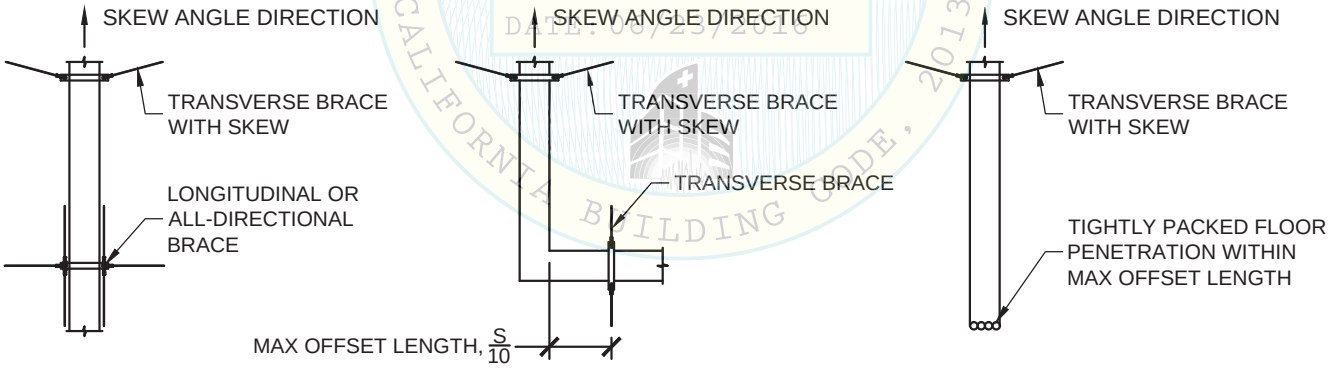

CABLE BRACE

NOTE: ANY OR ALL BRACE LOCATIONS ARE PERMITTED TO USE THE ANGLE VARIATION TO MEET FIELD CONDITIONS.

REVIEWED FOR CODE COMPLIANCE
CALIFORNIA BUILDING CODE, 2013
OSHPD
OPM 0043-13
BY: Jeffrey Y. Kikumoto
DATE: 06/23/2016

MASON WEST, INC.
1601 E. Miraloma Ave. Placentia, CA 92870
TEL (714) 630 - 0701, www.masonwest.com

Jiefu "Jeff" Zhang, SE
California SE No. S5270

PAGE
A14.1

ALTERNATE ARRANGEMENT OF SEISMIC BRACES FOR PIPING ON TRAPEZE

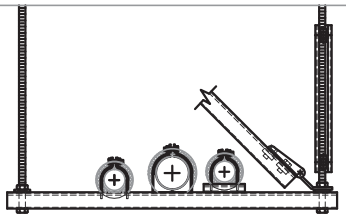

ELEVATION VIEW
SOLID BRACE INSTALLED
IN-BETWEEN HANGERS
(TRANSVERSE OR
ALL-DIRECTIONAL BRACE)

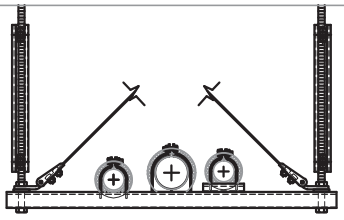

ELEVATION VIEW
CABLE BRACE INSTALLED
IN-BETWEEN HANGERS

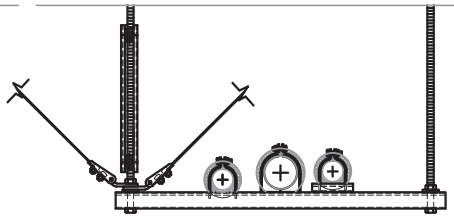

ELEVATION VIEW
CABLE BRACE INSTALLED AT
SINGLE HANGER
(TRANSVERSE BRACES ONLY)

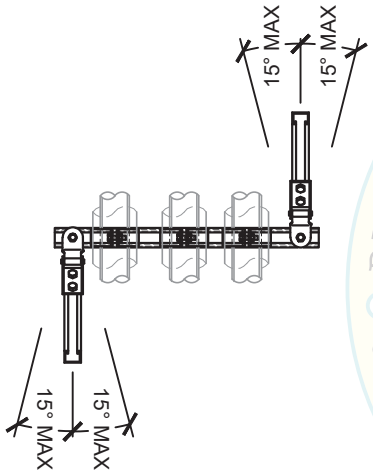

PLAN VIEW
LONGITUDINAL SOLID BRACES INSTALLED
IN ALTERNATING DIRECTIONS

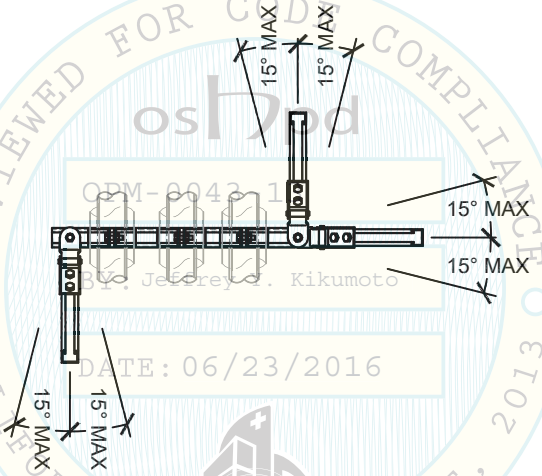

PLAN VIEW
ALL-DIRECTIONAL SOLID BRACES INSTALLED
IN ALTERNATING DIRECTIONS

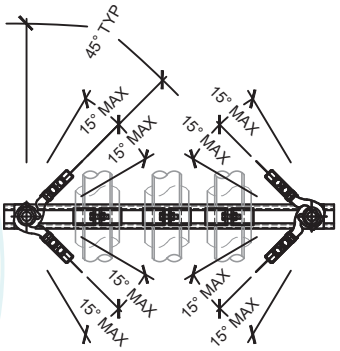

PLAN VIEW
CABLE X-PATTERN BRACE INSTALLED
IN-BETWEEN HANGERS

REVIEWED FOR CODE COMPLIANCE
CALIFORNIA BUILDING CODE, 2013
OSHPD
OPM-0043-13
By: Jeffrey T. Kikumoto
DATE: 06/23/2016

NOTES:
1) REFER TO APPROPRIATE DETAIL F PAGES FOR DIMENSIONS AND NOTATIONS NOT SHOWN.

MASON WEST, INC.
1601 E. Miraloma Ave. Placentia, CA 92870
TEL (714) 630 - 0701, www.masonwest.com

Jiefu "Jeff" Zhang, SE
California SE No. S5270

PAGE
A15.0

ALTERNATE ARRANGEMENT OF SEISMIC BRACES FOR PIPING ON TRAPEZE

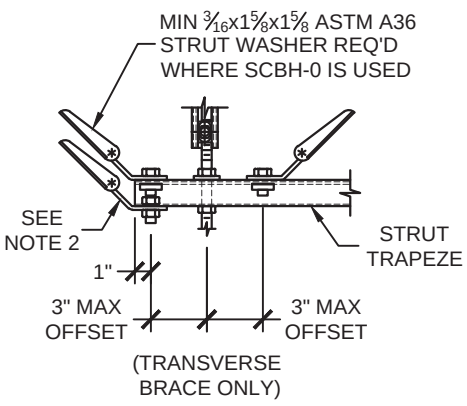

(TRANSVERSE BRACE ONLY)

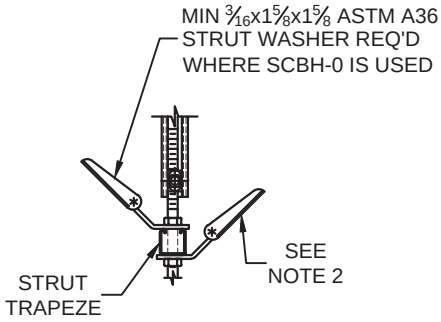

(LONGITUDINAL OR ALL-DIRECTIONAL BRACE)

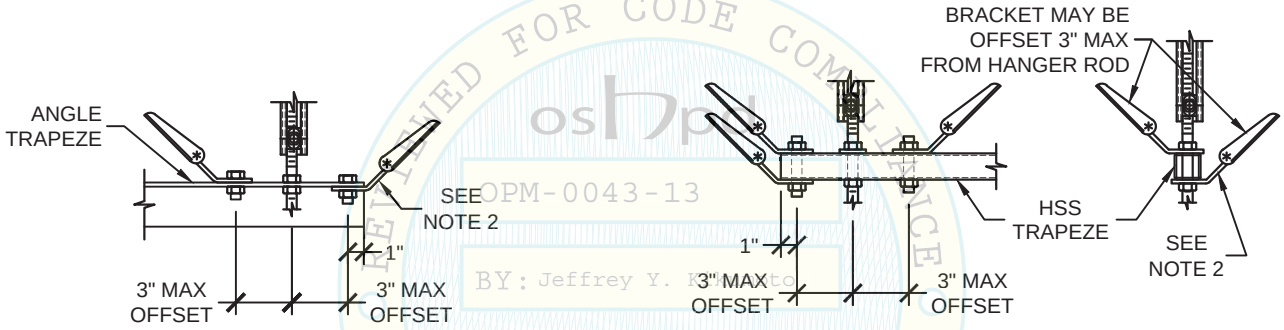

(TRANSVERSE, LONGITUDINAL OR ALL-DIRECTIONAL BRACE)

(TRANSVERSE, LONGITUDINAL OR ALL-DIRECTIONAL BRACE)

SEISMIC BRACE BRACKET OFFSET FROM HANGER RODS

REVIEWED FOR CODE COMPLIANCE
OSHPD
OPM-0043-13
BY: Jeffrey Y. Kikumoto
DATE: 06/23/2016
CALIFORNIA BUILDING CODE, 2013

NOTES:
1) REFER TO APPROPRIATE DETAIL F PAGES FOR DIMENSIONS AND NOTATIONS NOT SHOWN.
2) WHEN INSTALLING SHB TO BOTTOM OF TRAPEZE, MW-KY SHB KEY IS REQ'D (REF. X2.4).

MASON WEST, INC.
1601 E. Miraloma Ave. Placentia, CA 92870
TEL (714) 630 - 0701, www.masonwest.com

Jiefu "Jeff" Zhang, SE
California SE No. S5270

PAGE
A15.1

ALTERNATE ARRANGEMENT OF SEISMIC BRACES FOR INDIVIDUALLY SUSPENDED STEEL PIPING

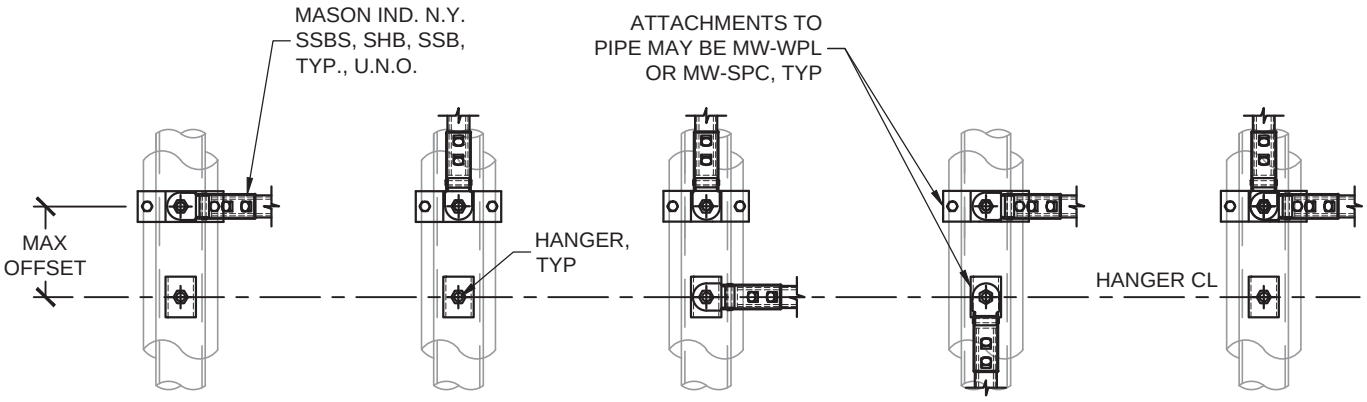

PLAN VIEW
TRANSVERSE SOLID BRACE OFFSET FROM HANGER

PLAN VIEW
LONGITUDINAL SOLID BRACE OFFSET FROM HANGER

PLAN VIEW
ALL-DIRECTIONAL SOLID BRACE W/ LONGITUDINAL BRACE OFFSET FROM HANGER

PLAN VIEW
ALL-DIRECTIONAL SOLID BRACE W/ TRANSVERSE BRACE OFFSET FROM HANGER

PLAN VIEW
ALL-DIRECTIONAL SOLID BRACE OFFSET FROM HANGER

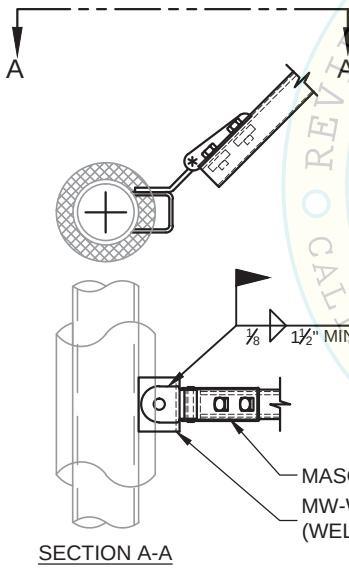

SECTION A-A

ALTERNATE WITH WELD OPTION
TRANSVERSE SOLID BRACE INSTALLED TO SIDE OF PIPE

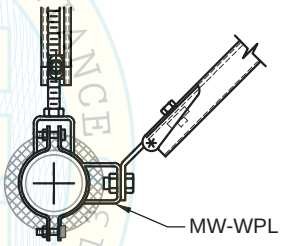

ALTERNATE INSTALLATION
OFFSET BRACE MAY BE INSTALLED TO SIDE OF PIPE

PIPE DIA.	MAX OFFSET
1/2" - 12"	12"
14"	14"
16"	16"
18"	18"
20"	20"
24"	22"

REVIEWED FOR CODE COMPLIANCE
CALIFORNIA BUILDING CODE
oshpd
OPM-0043-13
BY: Jeffrey Y. Kikumoto
DATE: 06/23/2016

NOTES:
1) REFER TO APPROPRIATE DETAIL C PAGES FOR DIMENSIONS AND NOTATIONS NOT SHOWN.
2) MAX OFFSETS ARE BASED ON STEEL PIPE CONFORMING TO ASTM SPECIFICATION A53, TYPE E, GRADE B WITH MINIMUM Fy = 35 ksi AND S_A = 14.6 ksi AT MAXIMUM OPERATING PRESSURE AND TEMPERATURE OF 400 psi and 650°F, RESPECTIVELY.

MASON WEST, INC.
1601 E. Miraloma Ave. Placentia, CA 92870
TEL (714) 630 - 0701, www.masonwest.com

Jiefu "Jeff" Zhang, SE
California SE No. S5270

PAGE
A15.2

ALTERNATE ARRANGEMENT OF SEISMIC BRACES FOR INDIVIDUALLY SUSPENDED STEEL PIPING

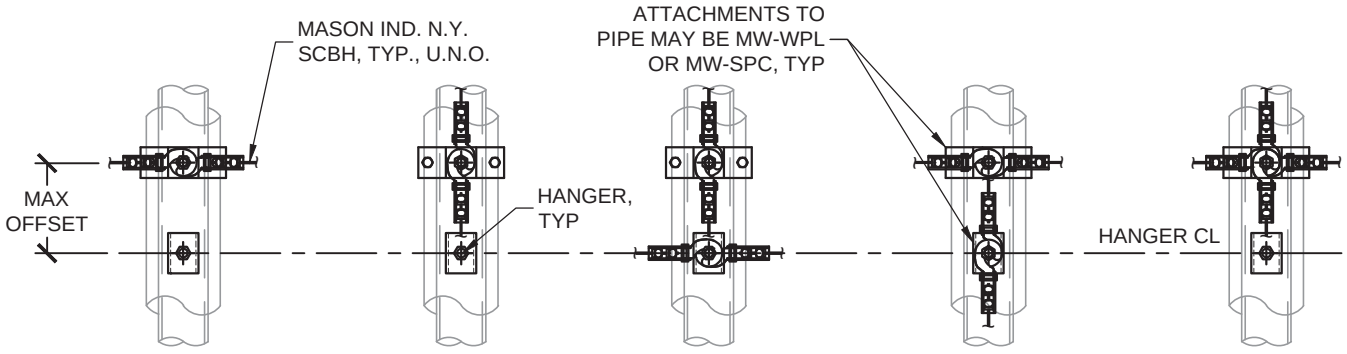

PLAN VIEW
TRANSVERSE CABLE BRACE OFFSET FROM HANGER

PLAN VIEW
LONGITUDINAL CABLE BRACE OFFSET FROM HANGER

PLAN VIEW
ALL-DIRECTIONAL CABLE BRACE W/ LONGITUDINAL BRACE OFFSET FROM HANGER

PLAN VIEW
ALL-DIRECTIONAL CABLE BRACE W/ TRANSVERSE BRACE OFFSET FROM HANGER

PLAN VIEW
ALL-DIRECTIONAL CABLE BRACE OFFSET FROM HANGER

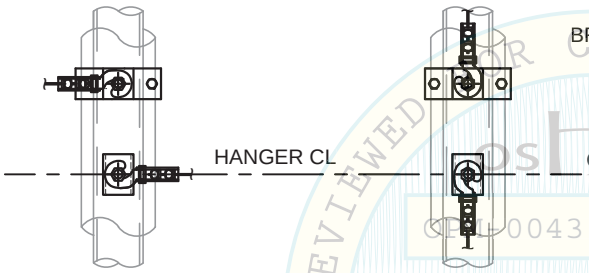

PLAN VIEW
TRANSVERSE CABLE BRACE W/ (1) CABLE BRACE OFFSET FROM HANGER

PLAN VIEW
LONGITUDINAL CABLE BRACE W/ (1) CABLE BRACE OFFSET FROM HANGER

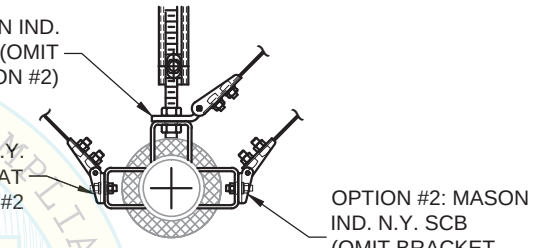

TRANSVERSE CABLE BRACE ALTERNATE INSTALLATION
OFFSET BRACE MAY BE INSTALLED TO SIDE OF PIPE

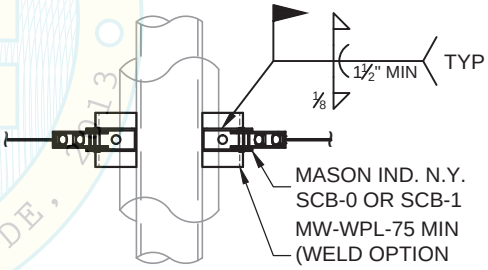

ALTERNATE WITH WELD OPTION

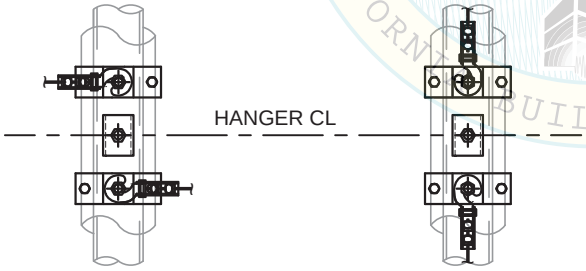

PLAN VIEW
TRANSVERSE CABLE BRACE W/ (2) CABLE BRACES OFFSET FROM HANGER

PLAN VIEW
LONGITUDINAL CABLE BRACE W/ (2) CABLE BRACES OFFSET FROM HANGER

PIPE DIA.	MAX OFFSET
1/2" - 12"	12"
14"	14"
16"	16"
18"	18"
20"	20"
24"	22"

NOTES:
1) REFER TO APPROPRIATE DETAIL C PAGES FOR DIMENSIONS AND NOTATIONS NOT SHOWN.
2) MAX OFFSETS ARE BASED ON STEEL PIPE CONFORMING TO ASTM SPECIFICATION A53, TYPE E, GRADE B WITH MINIMUM Fy = 35 ksi AND S_A = 14.6 ksi AT MAXIMUM OPERATING PRESSURE AND TEMPERATURE OF 400 psi and 650°F, RESPECTIVELY.

MASON WEST, INC.
1601 E. Miraloma Ave. Placentia, CA 92870
TEL (714) 630 - 0701, www.masonwest.com

Jiefu "Jeff" Zhang, SE
California SE No. S5270

PAGE
A15.3

REVIEWED FOR CODE COMPLIANCE CALIFORNIA BUILDING CODE, 2013
OSHPD
OPM-0043-13
Reviewed by: Jeffrey Y. Kikumoto
DATE: 06/23/2016

ALTERNATE ARRANGEMENT OF SEISMIC BRACES FOR INDIVIDUALLY SUSPENDED CAST IRON PIPING

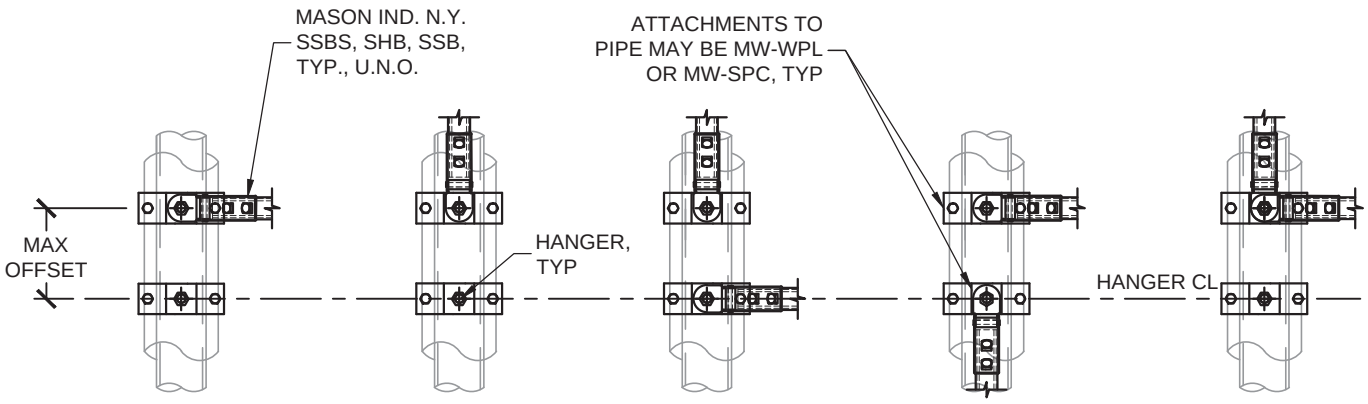

PLAN VIEW
TRANSVERSE SOLID BRACE OFFSET FROM HANGER

PLAN VIEW
LONGITUDINAL SOLID BRACE OFFSET FROM HANGER

PLAN VIEW
ALL-DIRECTIONAL SOLID BRACE W/ LONGITUDINAL BRACE OFFSET FROM HANGER

PLAN VIEW
ALL-DIRECTIONAL SOLID BRACE W/ TRANSVERSE BRACE OFFSET FROM HANGER

PLAN VIEW
ALL-DIRECTIONAL SOLID BRACE OFFSET FROM HANGER

REVIEWED FOR CODE COMPLIANCE
CALIFORNIA BUILDING CODE
oshpd
OPM-0043-13
BY: Jeffrey Y. Kikumoto
DATE: 06/23/2016

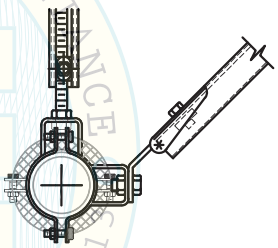

ALTERNATE INSTALLATION
OFFSET BRACE MAY BE INSTALLED TO SIDE OF PIPE

PIPE DIA.	MAX OFFSET
2" - 3"	10"
4" - 12"	12"

NOTES:
1) REFER TO APPROPRIATE DETAIL C PAGES FOR DIMENSIONS AND NOTATIONS NOT SHOWN.
2) MAX OFFSETS ARE BASED ON CAST IRON PIPE CONSTRUCTED TO ASTM A 888 OR CISPI 301 STANDARDS WITH A MINIMUM TENSILE STRENGTH OF 21,000 PSI.

MASON WEST, INC.
1601 E. Miraloma Ave. Placentia, CA 92870
TEL (714) 630 - 0701, www.masonwest.com

Jiefu "Jeff" Zhang, SE
California SE No. S5270

PAGE
A15.4

ALTERNATE ARRANGEMENT OF SEISMIC BRACES FOR INDIVIDUALLY SUSPENDED CAST IRON PIPING

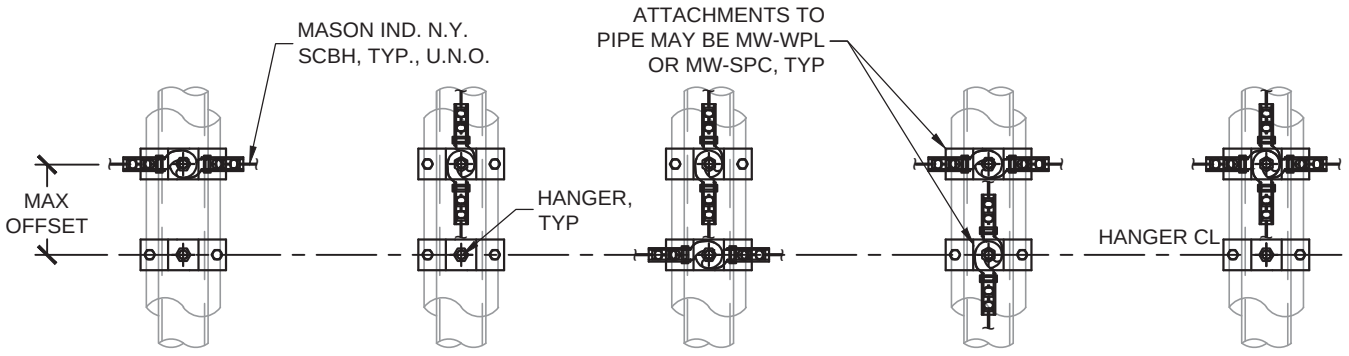

PLAN VIEW
TRANSVERSE CABLE BRACE OFFSET FROM HANGER

PLAN VIEW
LONGITUDINAL CABLE BRACE OFFSET FROM HANGER

PLAN VIEW
ALL-DIRECTIONAL CABLE BRACE W/ LONGITUDINAL BRACE OFFSET FROM HANGER

PLAN VIEW
ALL-DIRECTIONAL CABLE BRACE W/ TRANSVERSE BRACE OFFSET FROM HANGER

PLAN VIEW
ALL-DIRECTIONAL CABLE BRACE OFFSET FROM HANGER

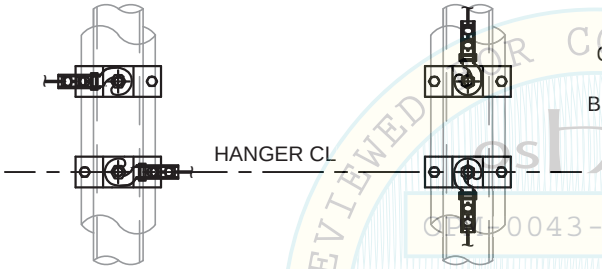

PLAN VIEW
TRANSVERSE CABLE BRACE W/ (1) CABLE BRACE OFFSET FROM HANGER

PLAN VIEW
LONGITUDINAL CABLE BRACE W/ (1) CABLE BRACE OFFSET FROM HANGER

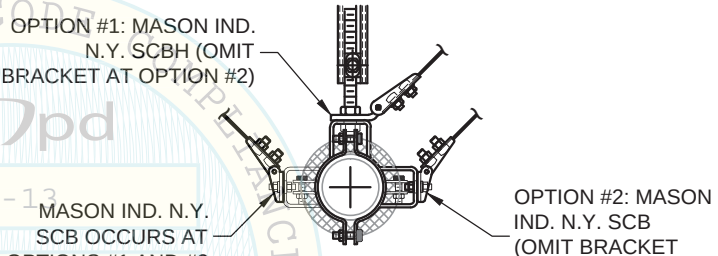

TRANSVERSE CABLE BRACE
ALTERNATE INSTALLATION
OFFSET BRACE MAY BE INSTALLED TO SIDE OF PIPE

OSHPD
OPM-0043-13
PER Jeffrey Y. Kikumoto
DATE: 06/23/2016
REVIEWED FOR CODE COMPLIANCE
CALIFORNIA BUILDING CODE, 2016

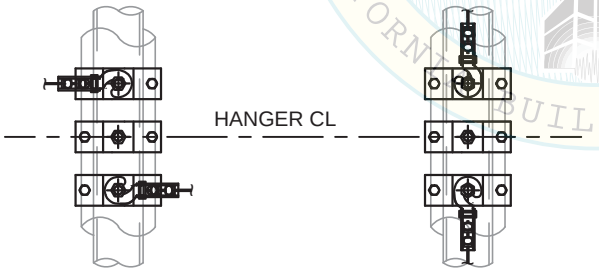

PLAN VIEW
TRANSVERSE CABLE BRACE W/ (2) CABLE BRACES OFFSET FROM HANGER

PLAN VIEW
LONGITUDINAL CABLE BRACE W/ (2) CABLE BRACES OFFSET FROM HANGER

PIPE DIA.	MAX OFFSET
2" - 3"	10"
4" - 12"	12"

NOTES:
1) REFER TO APPROPRIATE DETAIL C PAGES FOR DIMENSIONS AND NOTATIONS NOT SHOWN.
2) MAX OFFSETS ARE BASED ON CAST IRON PIPE CONSTRUCTED TO ASTM A 888 OR CISPI 301 STANDARDS WITH A MINIMUM TENSILE STRENGTH OF 21,000 PSI.

MASON WEST, INC.
1601 E. Miraloma Ave. Placentia, CA 92870
TEL (714) 630 - 0701, www.masonwest.com

Jiefu "Jeff" Zhang, SE
California SE No. S5270

PAGE
A15.5

ATTACHMENT OPTIONS FOR PIPING ON TRAPEZE MEMBERS FOR TRANSVERSE, LONGITUDINAL, AND ALL-DIRECTIONAL BRACING SYSTEMS

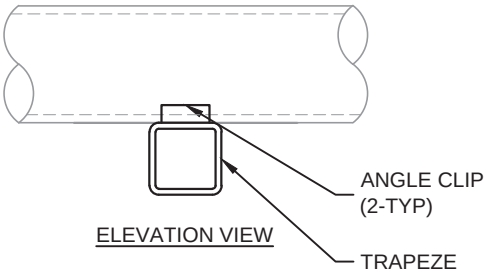

ELEVATION VIEW

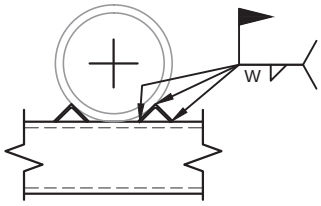

SECTION VIEW

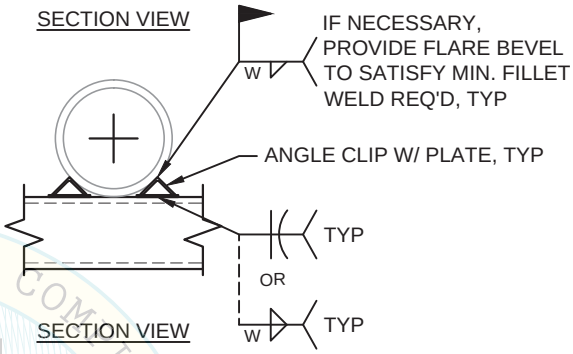

SECTION VIEW

PIPE SIZE	ANGLE CLIP SIZE[2]	WITH PLATE OPTION[2]	w, MIN WELD SIZE	MAX Fp[1] FORCE (lbs)
2½"-3"Ø	L1x1x⅛, 1" LG.	N/A	⅛"	1630
4"-5"Ø		PL3/16x2x1		
6"-8"Ø	L2x2x¼, 2" LG.	PL¼x3½x2	3/16"	2625
10"-18"Ø	L3x3x⅜, 3" LG.	PL½x5¼x3	¼"	11250
20"-30"Ø	L4x4x⅜, 5" LG.	PL⅝x7x4		19795

1. MAX Fp FORCES ARE THE WORST CASE FOR SINGLE DIRECTION LOADING.
2. ASTM A36, Fy = 36 KSI (STEEL ANGLES AND PLATES)

WELDED ANGLE CLIPS

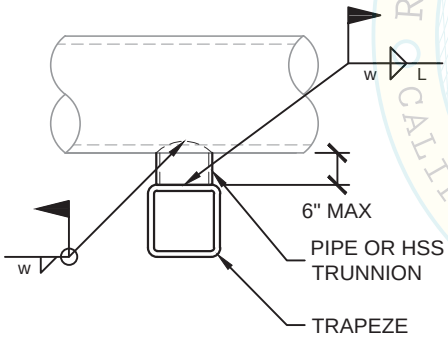

ELEVATION VIEW

STEEL PIPE (STANDARD SCHEDULE)[1, 2, 3, 4]						
PIPE SIZE	MAX TRANSVERSE Fp[4] (lbs)	MAX LONGITUDINAL Fp (lbs)	TRUNNION		w, MIN WELD SIZE	L, WELD LENGTH
			PIPE OPTION	HSS OPTION		
2½"Ø	240	870	1½" STD.	HSS2x2x¼	⅛"	2"
3"-4"Ø	380					
5"Ø	870					
6"-8"Ø	1600	4410	3" STD.	HSS3x3x¼	3/16"	2"
10"-12"Ø	4630	9670	4" STD.	HSS4x4x¼	¼"	3"
14"Ø	3770					
16"-18"Ø	4350					
20"Ø	5460	14630	5" STD.	HSS4x4x⅜	¼"	4"
24"Ø	6350					
30"Ø	7440					

1. MAX Fp FORCES ARE BASED ON STEEL PIPE CONFORMING TO ASTM SPECIFICATION A53, TYPE E, GRADE B WITH MINIMUM Fy = 35 ksi. FOR ASTM A53, TYPE E, GRADE A WITH MINIMUM Fy=30 ksi, REDUCE TRANSVERSE Fp FORCE ONLY BY A FACTOR OF 1.20 UP TO 14"Ø PIPE, 1.33 UP TO 30"Ø PIPE.
2. THE MAX Fp FORCES SHOWN ABOVE MAY BE USED FOR SCH. 80 STEEL PIPE.
3. FOR SCH. 10 STEEL PIPE, THE REGISTERED DESIGN PROFESSIONAL (RDP) SHALL DETERMINE THE MAX ALLOWABLE Fp FORCES.
4. FOR PIPE TRUNNION OPTION, THE BRACE SPACING SHALL NOT EXCEED 40'-0" MAX FOR TRANSVERSE BRACING SYSTEMS.
5. ASTM A53, GRADE B, Fy = 35 KSI (PIPE TRUNNION) OR ASTM A500, GRADE B, Fy = 46 KSI (HSS TRUNNION)

PIPE TRUNNION

OSHPD REVIEWED FOR CODE COMPLIANCE CALIFORNIA BUILDING CODE, 2013
OSHPD
OPM-0043-13
By: Jeffrey Kikumoto
Date: 06/23/2016

MASON WEST, INC.
1601 E. Miraloma Ave. Placentia, CA 92870
TEL (714) 630 - 0701, www.masonwest.com

Jiefu "Jeff" Zhang, SE
California SE No. S5270

PAGE
A16.0

ATTACHMENT OPTIONS FOR PIPING ON TRAPEZE MEMBERS FOR TRANSVERSE, LONGITUDINAL, AND ALL-DIRECTIONAL BRACING SYSTEMS

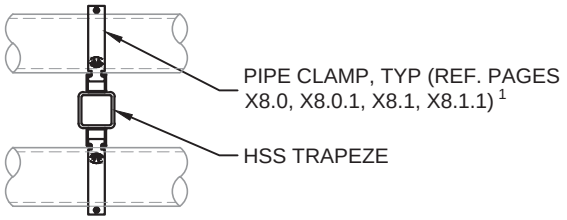

SIDE ELEVATION VIEW

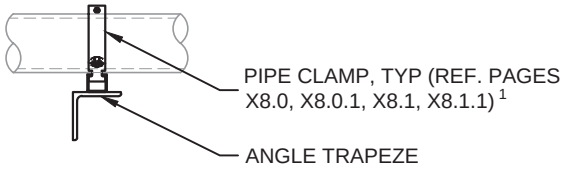

SIDE ELEVATION VIEW

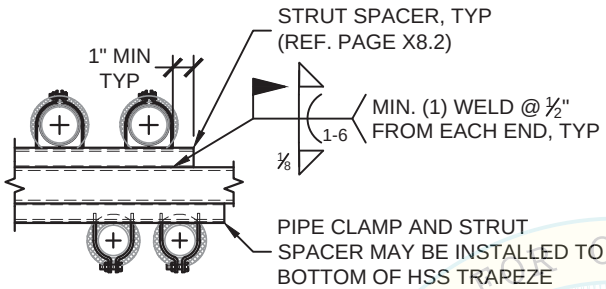

FRONT ELEVATION VIEW

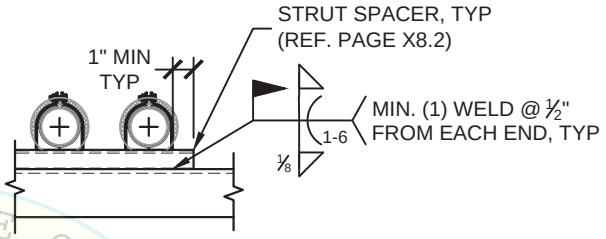

FRONT ELEVATION VIEW

MASON WEST MW-SSC AND MW-SCC PIPE CLAMPS

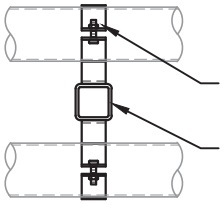

SIDE ELEVATION VIEW

PIPE SIZE	D, BOLT DIAMETER	w, MIN WELD SIZE
1¼"-2"Ø	⅜"	⅛"
2½"-3"Ø	½"	3⁄16"
4"-5"Ø	⅝"	3⁄16"
6"-12"Ø	¾"	¼"

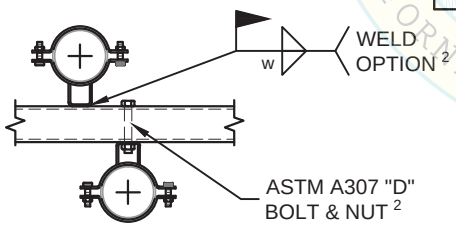

FRONT ELEVATION VIEW

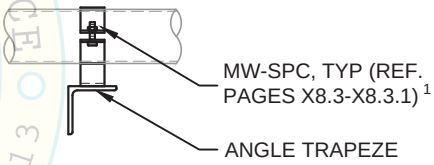

SIDE ELEVATION VIEW

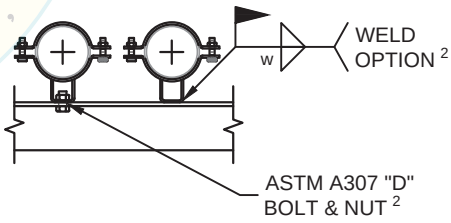

FRONT ELEVATION VIEW

MASON WEST MW-SPC PIPE CLAMPS

NOTES:

1) PIPE CLAMPS MAY BE USED FOR TRANSVERSE, LONGITUDINAL, OR ALL-DIRECTIONAL BRACING SYSTEMS. REF. APPROPRIATE X8 PAGES FOR MAX Fp FORCES.
2) RDP SHALL VERIFY THE SUPPORTING TRAPEZE HAS SUFFICIENT STRENGTH AND STEEL WIDTH FOR WELD AND BOLT ATTACHMENT OPTIONS

MASON WEST, INC.
1601 E. Miraloma Ave. Placentia, CA 92870
TEL (714) 630 - 0701, www.masonwest.com

Jiefu "Jeff" Zhang, SE
California SE No. S5270

PAGE
A16.1

REVIEWED FOR CODE COMPLIANCE CALIFORNIA BUILDING CODE, 2013
osDpd
OPM-0043-13
BY: Jeffrey K. Kikumoto
DATE: 06/23/2016

ATTACHMENT OPTIONS FOR PIPING ON TRAPEZE MEMBERS FOR LONGITUDINAL BRACING SYSTEMS

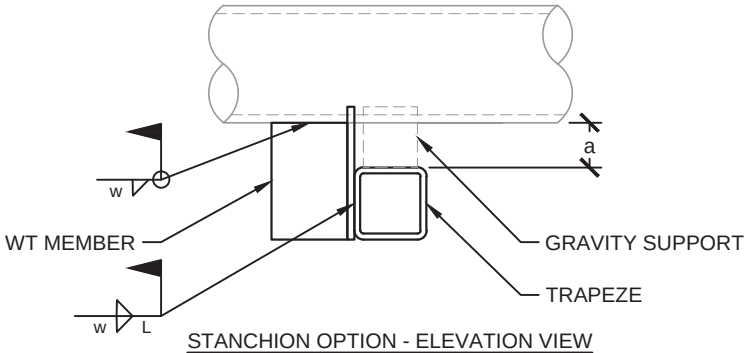

STANCHION OPTION - ELEVATION VIEW

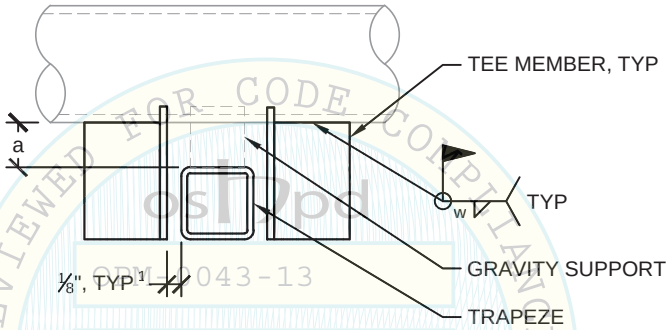

STOPPER OPTION - ELEVATION VIEW

STEEL PIPE (STANDARD SCHEDULE) [1, 2]						
PIPE SIZE	WT SIZE	w, MIN WELD SIZE	L, WELD LENGTH	MAX Fp FORCE (lbs)		
				a = 12" MAX	a = 8" MAX	a = 4" MAX
2½"-3"Ø	MT3x2.2	⅛"	2"	320	440	690
4"-5"Ø	WT3x6	3/16"	2"	810	1100	1730
6"-8"Ø	WT4x7.5	¼"	3"	1530	2090	3290
10"-18"Ø	WT6x13	¼"	4"	2840	3880	6100
20"-30"Ø	WT8x20	¼"	4"	6490	8850	13920

TEE MEMBER STANCHION OR STOPPER OPTION

NOTES:
1) THE MAX Fp FORCES SHOWN ABOVE MAY BE USED FOR SCH. 80 STEEL PIPE. FOR SCH. 10 STEEL PIPE, THE REGISTERED DESIGN PROFESSIONAL (RDP) SHALL DETERMINE THE MAX ALLOWABLE Fp FORCES.
2) GAP MAY INCREASE FOR JOB SPECIFIC THERMAL DESIGN.
3) ASTM A36, Fy = 36 KSI (WT SHAPES)

MASON WEST, INC.
1601 E. Miraloma Ave. Placentia, CA 92870
TEL (714) 630 - 0701, www.masonwest.com

Jiefu "Jeff" Zhang, SE
California SE No. S5270

PAGE
A16.2

REVIEWED FOR CODE COMPLIANCE
OSHPD
OPM-0043-13
DATE: 06/23/2016
BY: Jeffrey Y. Kikumoto
CALIFORNIA BUILDING CODE

ATTACHMENT OPTIONS FOR PIPING ON TRAPEZE MEMBERS FOR TRANSVERSE BRACING SYSTEMS

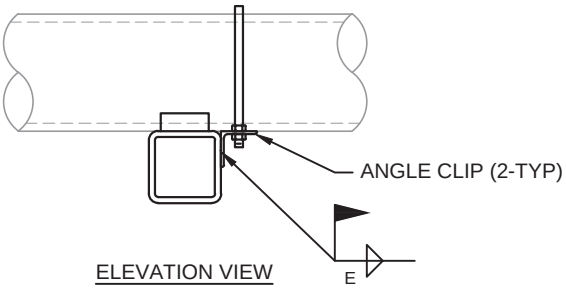

ELEVATION VIEW

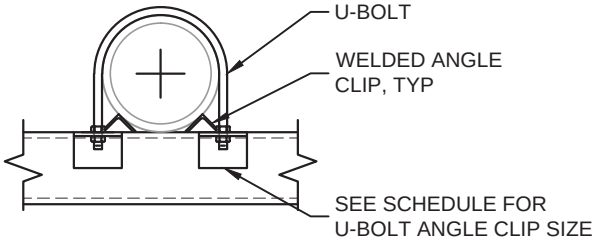

SECTION VIEW

PIPE SIZE	U-BOLT DIA	U-BOLT ANGLE CLIP SIZE	E, WELD SIZE	MAX Fp FORCE (lbs)
2½"-5"Ø	½"	L3x3x¼, 3" LG	3/16"	1200
6"-8"Ø	⅝"			
10"Ø	¾"	L4x4x⅜, 4" LG	¼"	3960
12"-16"Ø	⅞"	L4x4x½, 4" LG	¼"	4970
18"-30"Ø	1"	L5x5x⅝, 5" LG	¼"	6060

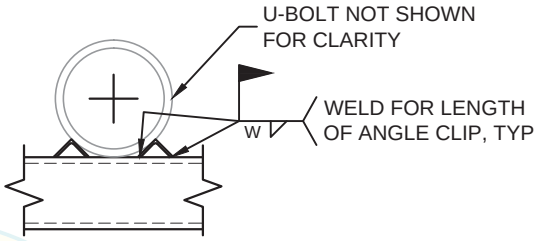

SECTION VIEW: OPTION 1

PIPE SIZE	WELDED ANGLE CLIP SIZE	WITH PLATE OPTION	w, MIN WELD SIZE
2½"-3"Ø	L1x1x⅛, 1" LG.	N/A	⅛"
4"-5"Ø		PL3/16x2x1	
6"-8"Ø	L2x2x¼, 2" LG.	PL¼x3½x2	3/16"
10"-18"Ø	L3x3x⅜, 3" LG.	PL½x5¼x3	¼"
20"-30"Ø	L4x4x⅜, 4" LG.	PL⅝x7x4	¼"

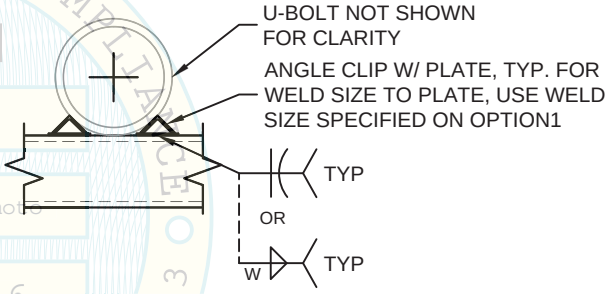

SECTION VIEW: OPTION 2

U-BOLT W/ ANGLE CLIPS [1]

REVIEWED FOR CODE COMPLIANCE
OSHPD
OPM-0043-13
BY: Jeffrey Y. Kikumoto
DATE: 06/23/2016
CALIFORNIA BUILDING CODE, 2013

NOTES:
1) U-BOLT W/ ANGLE CLIPS OPTION MAY ONLY BE INSTALLED TO TOP OF TRAPEZE.
2) ASTM A36, Fy = 36 KSI (STEEL ANGLES, PLATES, AND U-BOLTS)

MASON WEST, INC.
1601 E. Miraloma Ave. Placentia, CA 92870
TEL (714) 630 - 0701, www.masonwest.com

Jiefu "Jeff" Zhang, SE
California SE No. S5270

PAGE
A16.3

ATTACHMENT OPTIONS FOR PIPING ON TRAPEZE MEMBERS FOR TRANSVERSE BRACING SYSTEMS

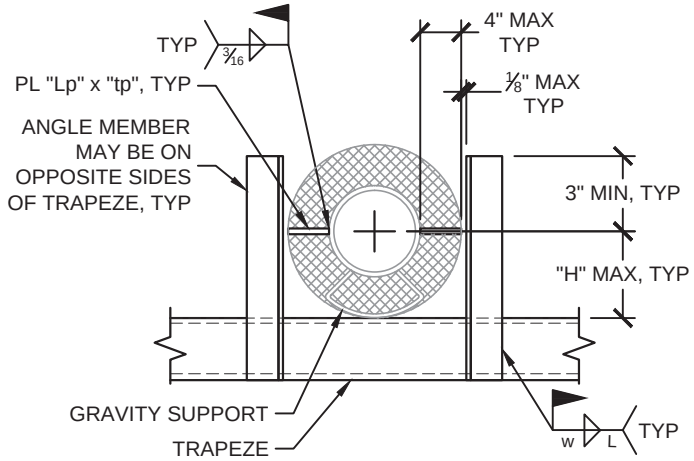

PIPE SIZE	MAX Fp FORCE (lbs)	ANGLE MEMBER	H	w WELD SIZE	L MIN WELD LENGTH	PLATE SIZE	
						Lp	tp
2½"-5"Ø	720	L2x2x¼	9"	⅛"	2"	4"	¼"
6"-8"Ø	1420	L3x3x¼	12"	3/16"	3"	5"	⅜"
10"-18"Ø	1620	L4x4x¼	16"	¼"	4"	6"	
20"-30"Ø	2840	L6x6x⅜	24"	¼"	4"	8"	

ANGLE POST MEMBERS

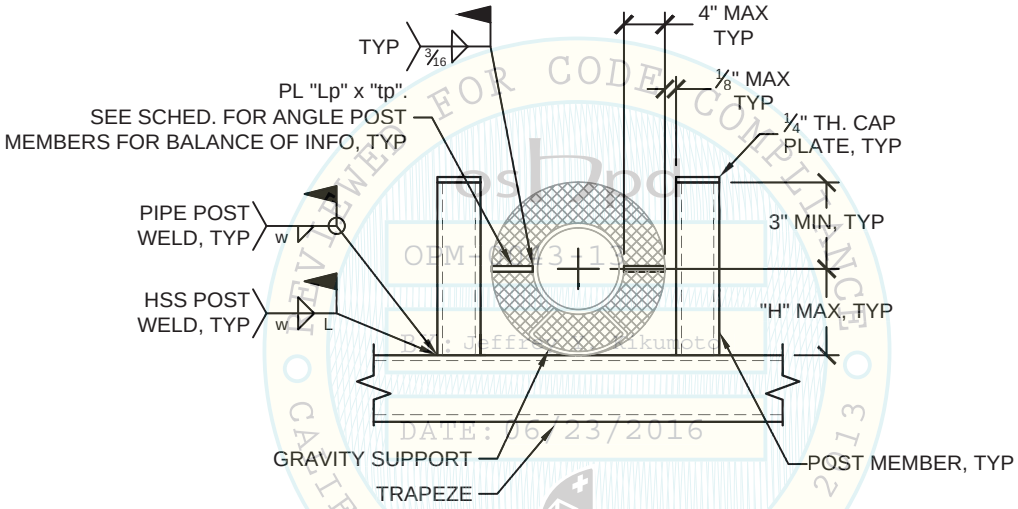

PIPE SIZE	MAX Fp FORCE (lbs)	POST MEMBER		H	w WELD SIZE	L MIN WELD LENGTH
		PIPE OPTION	HSS OPTION			
2½"-5"Ø	580	1½" STD.	HSS2x2x¼	9"	⅛"	2"
6"-8"Ø	2070	3" STD.	HSS3x3x¼	12"	3/16"	3"
10"-18"Ø	3680	4" STD.	HSS4x4x¼	16"	¼"	4"
20"-30"Ø	2460	5" STD.	HSS4x4x⅜	24"	¼"	4"

PIPE OR HSS POST MEMBERS

1. MAX Fp FORCES ARE BASED ON STEEL PIPE CONFORMING TO ASTM SPECIFICATION A53, TYPE E, GRADE B WITH MINIMUM Fy = 35 ksi. FOR ASTM A53, TYPE E, GRADE A WITH MINIMUM Fy=30 ksi, REDUCE TRANSVERSE Fp FORCE ONLY BY A FACTOR OF 1.20 UP TO 14"Ø PIPE, 1.33 UP TO 30"Ø PIPE.
2. THE MAX Fp FORCES SHOWN ABOVE MAY BE USED FOR SCH. 80 STEEL PIPE.
3. FOR SCH. 10 STEEL PIPE, THE REGISTERED DESIGN PROFESSIONAL (RDP) SHALL DETERMINE THE MAX ALLOWABLE Fp FORCES.
4. THE BRACE SPACING SHALL NOT EXCEED 40'-0" MAX FOR TRANSVERSE BRACING SYSTEMS.
5. ASTM A53, GRADE B, Fy = 35 KSI (PIPE POST), ASTM A500, GRADE B, Fy = 46 KSI (HSS POST), OR ASTM A36, Fy = 36 KSI (ANGLE POST)

MASON WEST, INC.
1601 E. Miraloma Ave. Placentia, CA 92870
TEL (714) 630 - 0701, www.masonwest.com

Jiefu "Jeff" Zhang, SE
California SE No. S5270

PAGE
A16.4

OSHPD PREAPPROVED FOR CODE COMPLIANCE OPM-0043-13 Reviewed by: Jeffrey Kikumoto DATE: 06/23/2016 CALIFORNIA BUILDING CODE 2013

SEISMIC SOLID BRACING OFF STRUT HANGER TRANSVERSE OPTION FOR INDIVIDUALLY SUSPENDED PIPING

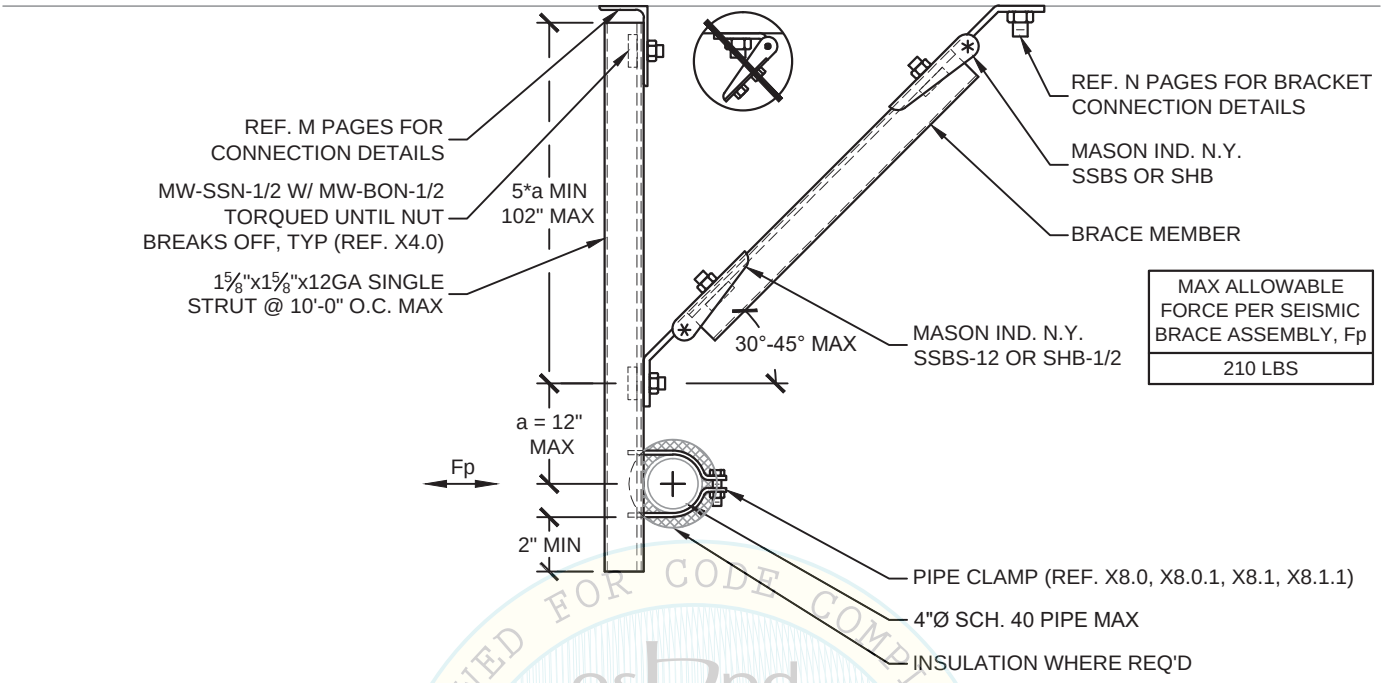

SINGLE STRUT OPTION

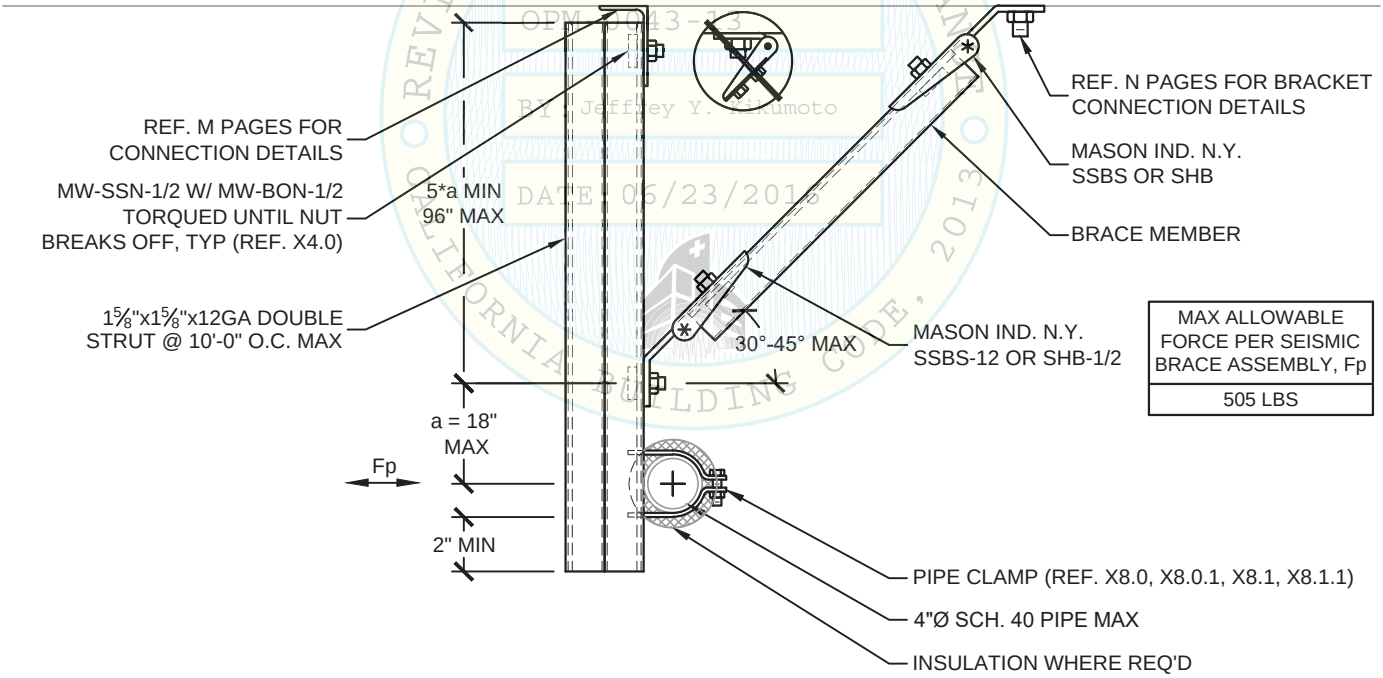

DOUBLE STRUT OPTION

NOTES:
1) REFER TO APPROPRIATE C PAGES FOR DIMENSIONS AND ANNOTATIONS NOT SHOWN.

MASON WEST, INC.
1601 E. Miraloma Ave. Placentia, CA 92870
TEL (714) 630 - 0701, www.masonwest.com

Jiefu "Jeff" Zhang, SE
California SE No. S5270

PAGE
A18.0

OPM-0043-13
Reviewed for Code Compliance by Jeffrey Y. Kikumoto
DATE: 06/23/2016
CALIFORNIA BUILDING CODE, 2013

SEISMIC SOLID BRACING OFF STRUT HANGER
LONGITUDINAL OPTION FOR INDIVIDUALLY SUSPENDED PIPING

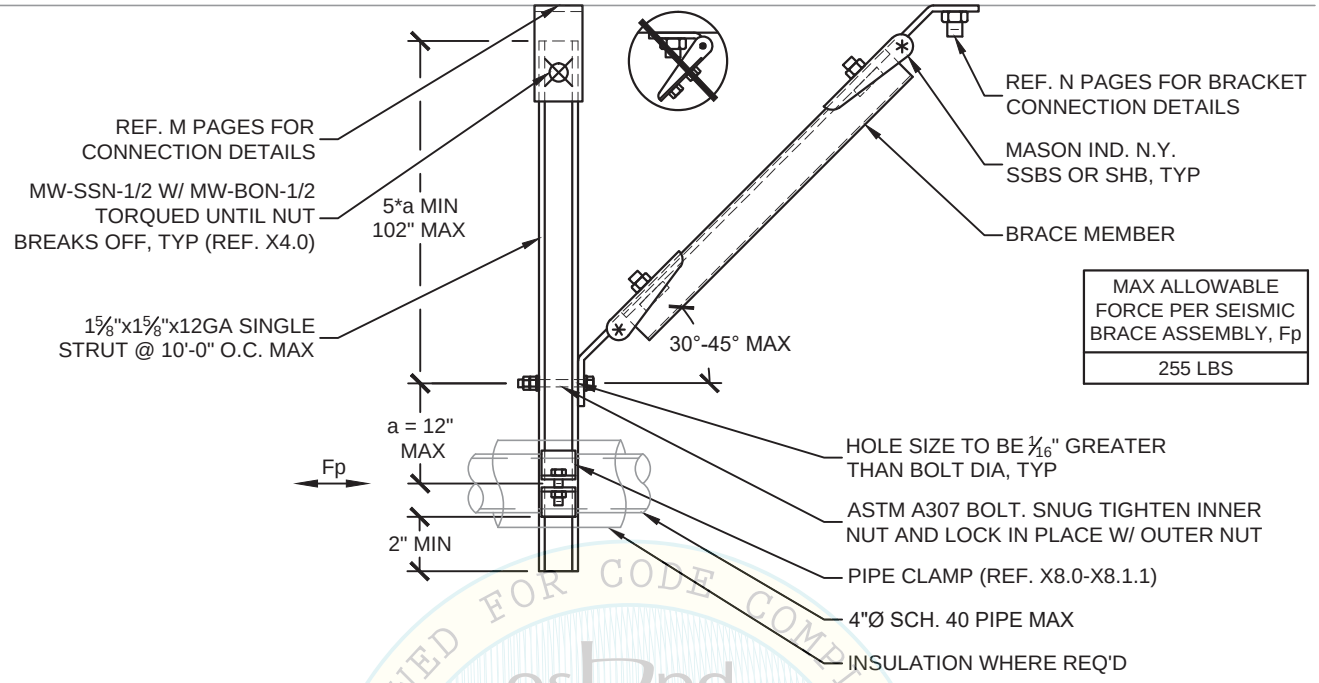

MAX ALLOWABLE FORCE PER SEISMIC BRACE ASSEMBLY, Fp
255 LBS

SINGLE STRUT OPTION

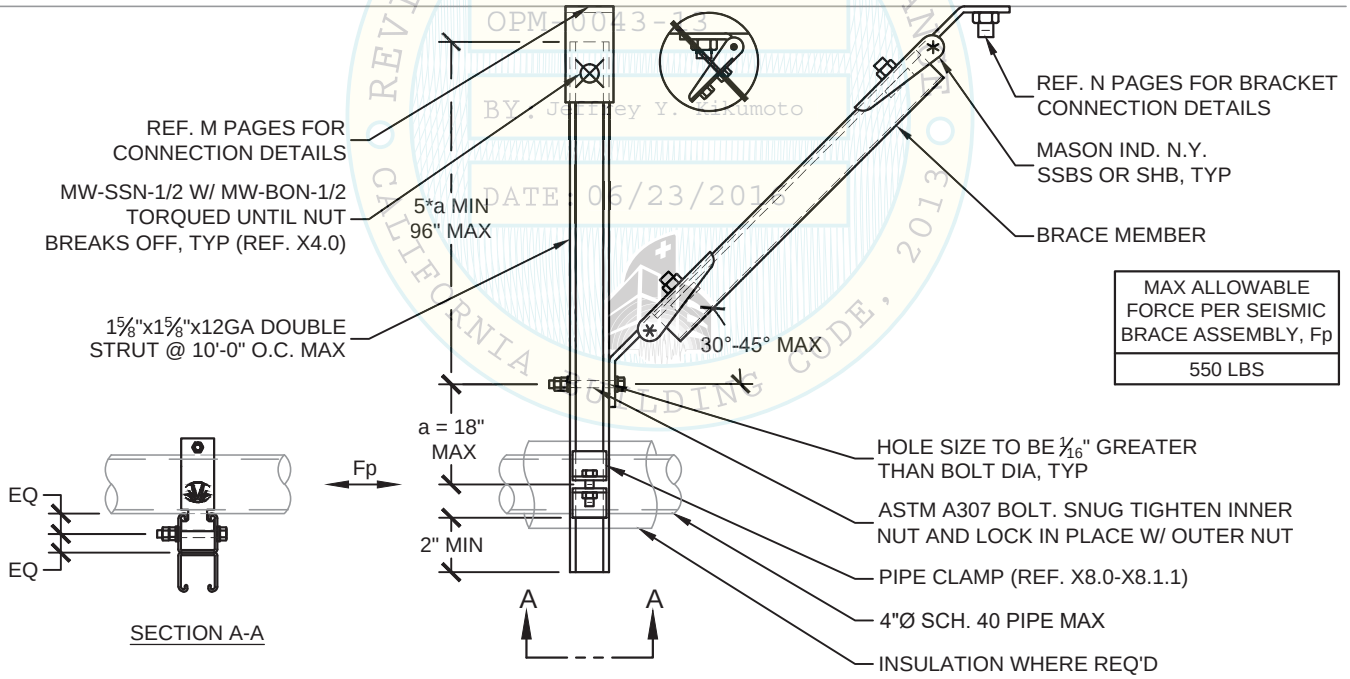

MAX ALLOWABLE FORCE PER SEISMIC BRACE ASSEMBLY, Fp
550 LBS

SECTION A-A

DOUBLE STRUT OPTION

NOTES:
1) REFER TO APPROPRIATE C PAGES FOR DIMENSIONS AND ANNOTATIONS NOT SHOWN.

MASON WEST, INC.
1601 E. Miraloma Ave. Placentia, CA 92870
TEL (714) 630 - 0701, www.masonwest.com

Jiefu "Jeff" Zhang, SE
California SE No. S5270

PAGE
A18.1

OPM-0043-13
BY: Jeffrey Y. Kikumoto
DATE: 06/23/2016
REVIEWED FOR CODE COMPLIANCE TO CALIFORNIA BUILDING CODE, 2013

SEISMIC CABLE BRACING OFF STRUT HANGER TRANSVERSE OPTION FOR INDIVIDUALLY SUSPENDED PIPING

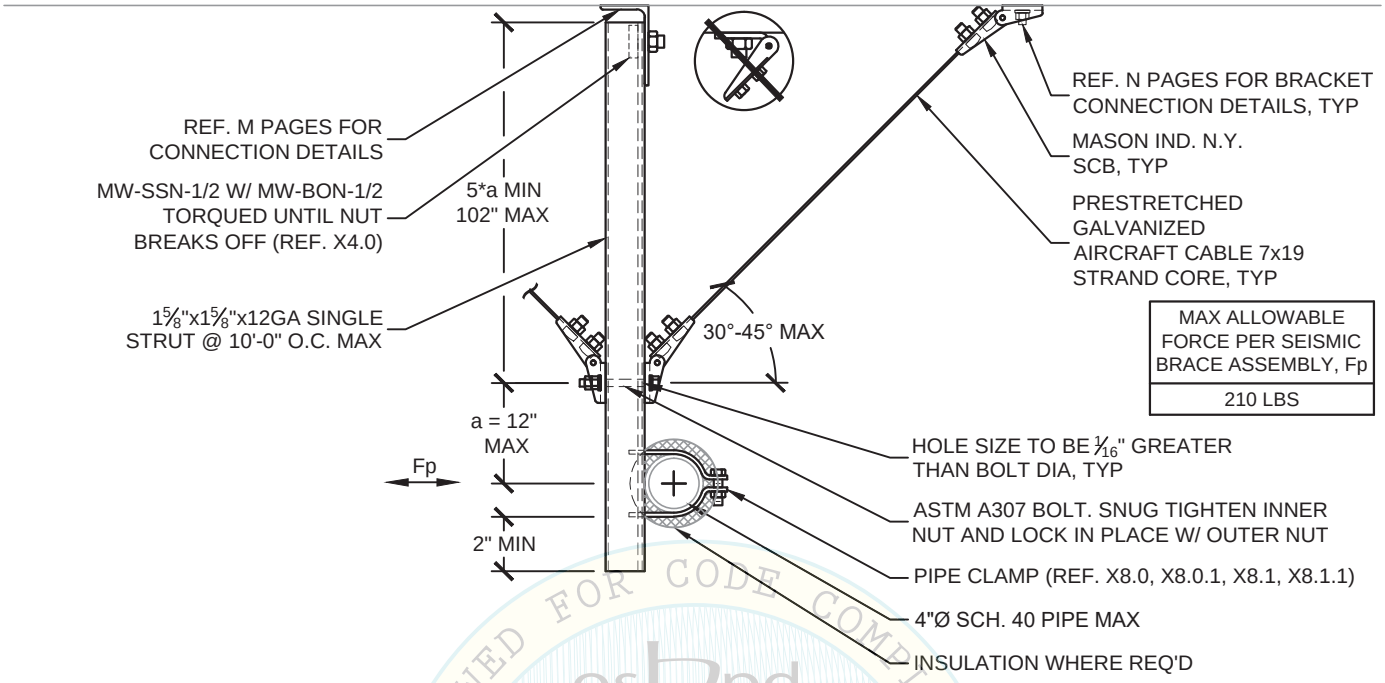

SINGLE STRUT OPTION

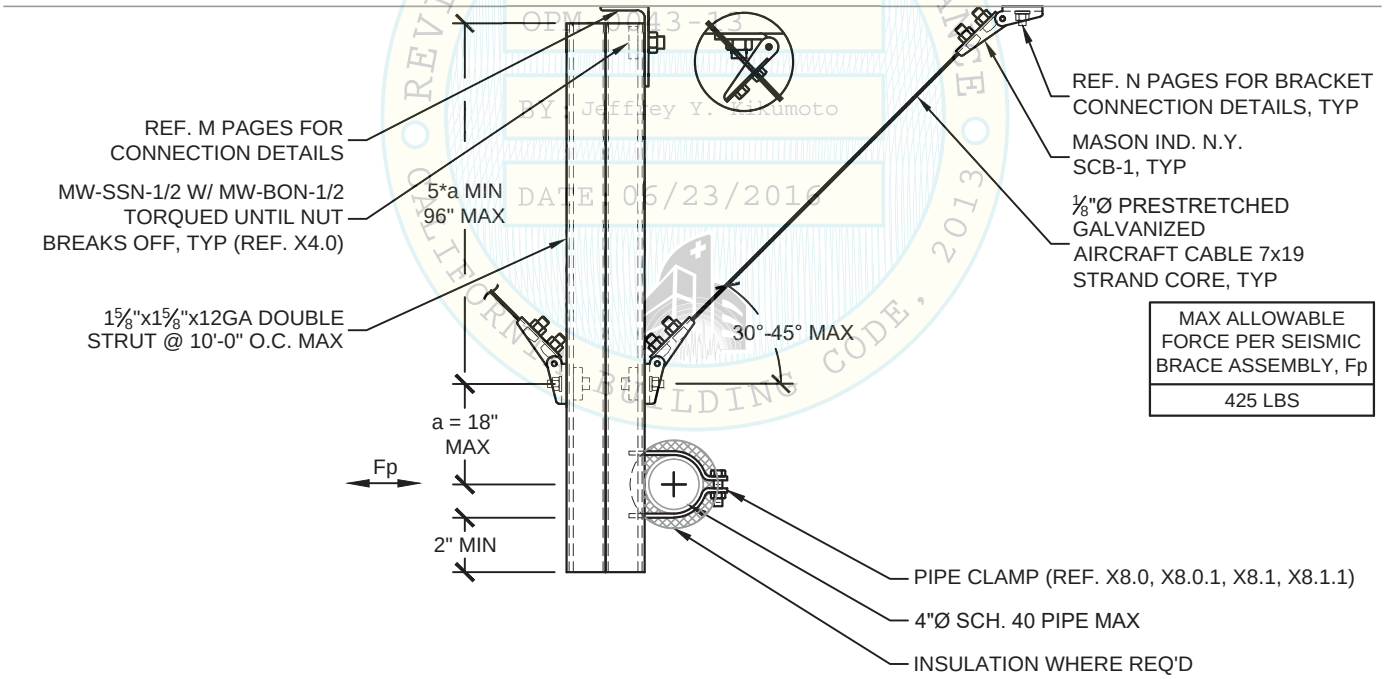

DOUBLE STRUT OPTION

NOTES:
1) REFER TO APPROPRIATE C PAGES FOR DIMENSIONS AND ANNOTATIONS NOT SHOWN.

MASON WEST, INC.
1601 E. Miraloma Ave. Placentia, CA 92870
TEL (714) 630 - 0701, www.masonwest.com

Jiefu "Jeff" Zhang, SE
California SE No. S5270

PAGE
A18.2

OPM-0043-13
BY: Jeffrey Y. Kikumoto
DATE: 06/23/2016
REVIEWED FOR CODE COMPLIANCE
CALIFORNIA BUILDING CODE, 2013

SEISMIC CABLE BRACING OFF STRUT HANGER
LONGITUDINAL OPTION FOR INDIVIDUALLY SUSPENDED PIPING

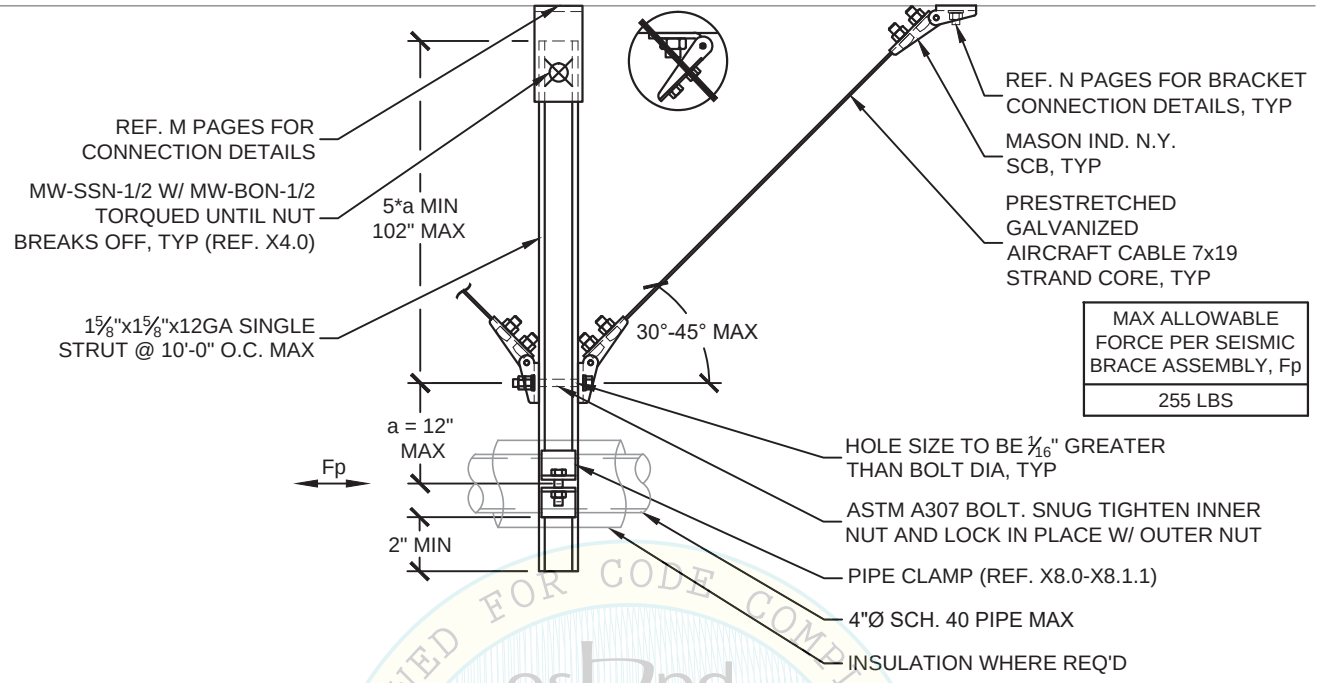

SINGLE STRUT OPTION

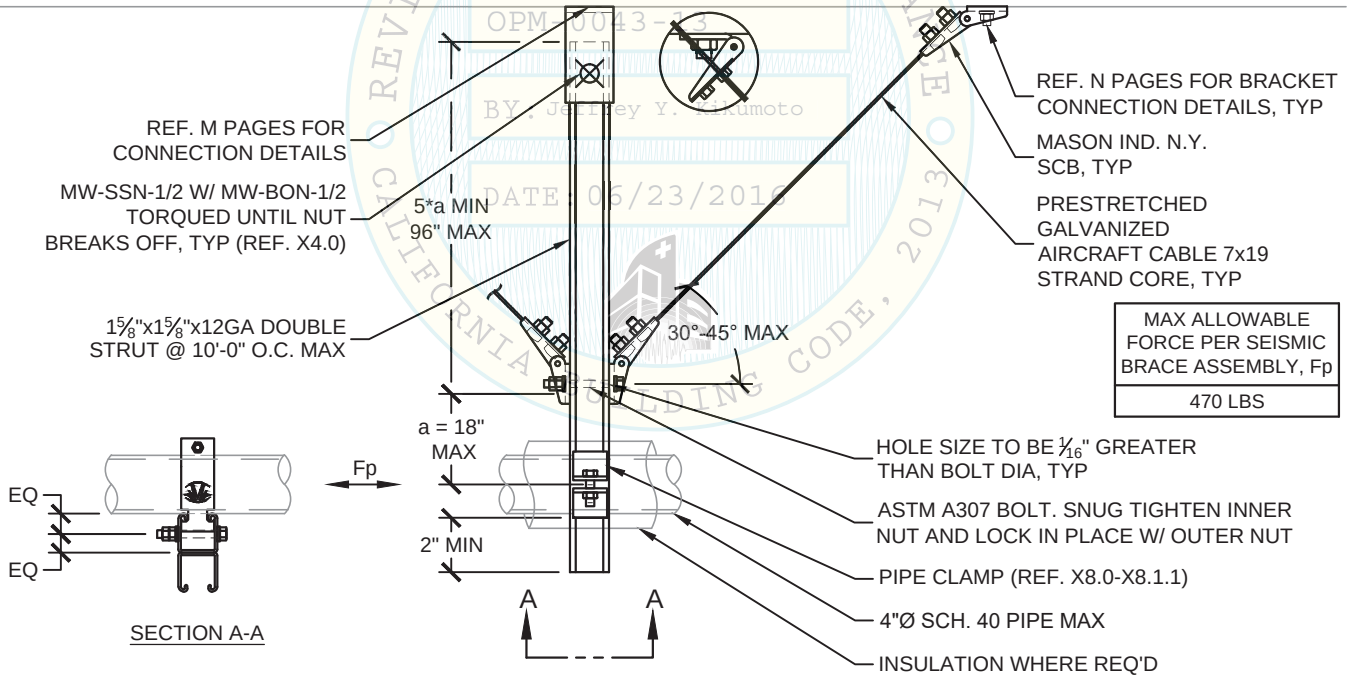

DOUBLE STRUT OPTION

OPM-0043-13
BY: Jeffrey Y. Kikumoto
DATE: 06/23/2016
REVIEWED FOR CODE COMPLIANCE TO CALIFORNIA BUILDING CODE, 2013

NOTES:
1) REFER TO APPROPRIATE C PAGES FOR DIMENSIONS AND ANNOTATIONS NOT SHOWN.

MASON WEST, INC.
1601 E. Miraloma Ave. Placentia, CA 92870
TEL (714) 630 - 0701, www.masonwest.com

Jiefu "Jeff" Zhang, SE
California SE No. S5270

PAGE
A18.3

SEISMIC SOLID BRACING OFF STRUT HANGER TRANSVERSE OPTION FOR SUSPENDED PIPING ON TRAPEZE

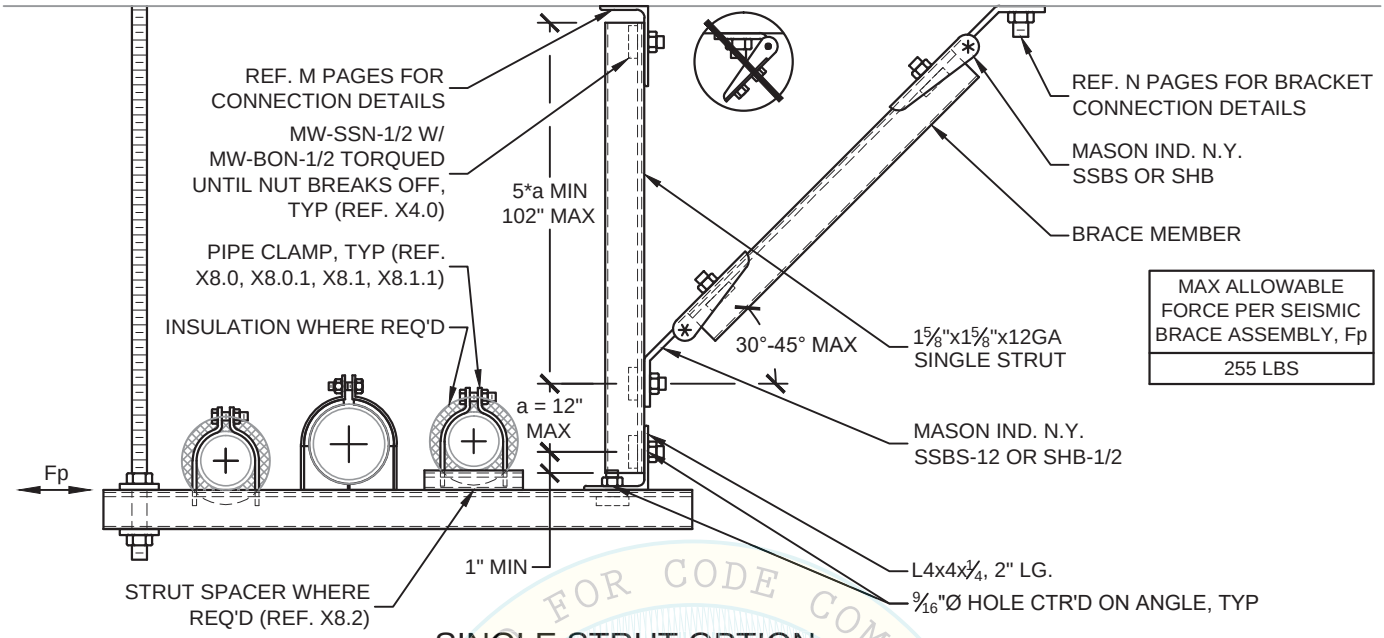

SINGLE STRUT OPTION

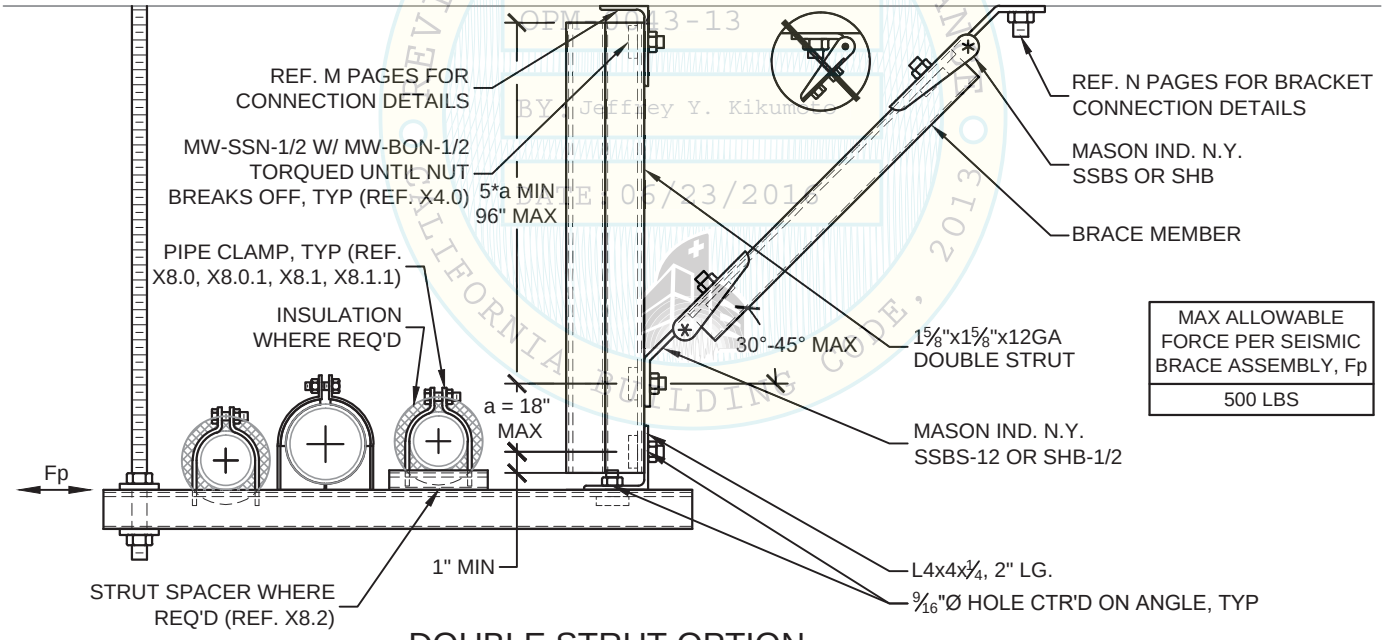

DOUBLE STRUT OPTION

NOTES:
1) REFER TO APPROPRIATE F PAGES FOR DIMENSIONS AND ANNOTATIONS NOT SHOWN.
2) SINGLE STRUT AND DOUBLE STRUT OPTIONS MAY CARRY UP TO A MAXIMUM OF 30LBS/FT OR 60LBS/FT, RESPECTIVELY.

MASON WEST, INC.
1601 E. Miraloma Ave. Placentia, CA 92870
TEL (714) 630 - 0701, www.masonwest.com

Jiefu "Jeff" Zhang, SE
California SE No. S5270

PAGE
A18.4

SEISMIC SOLID BRACING OFF STRUT HANGER
LONGITUDINAL OPTION FOR SUSPENDED PIPING ON TRAPEZE

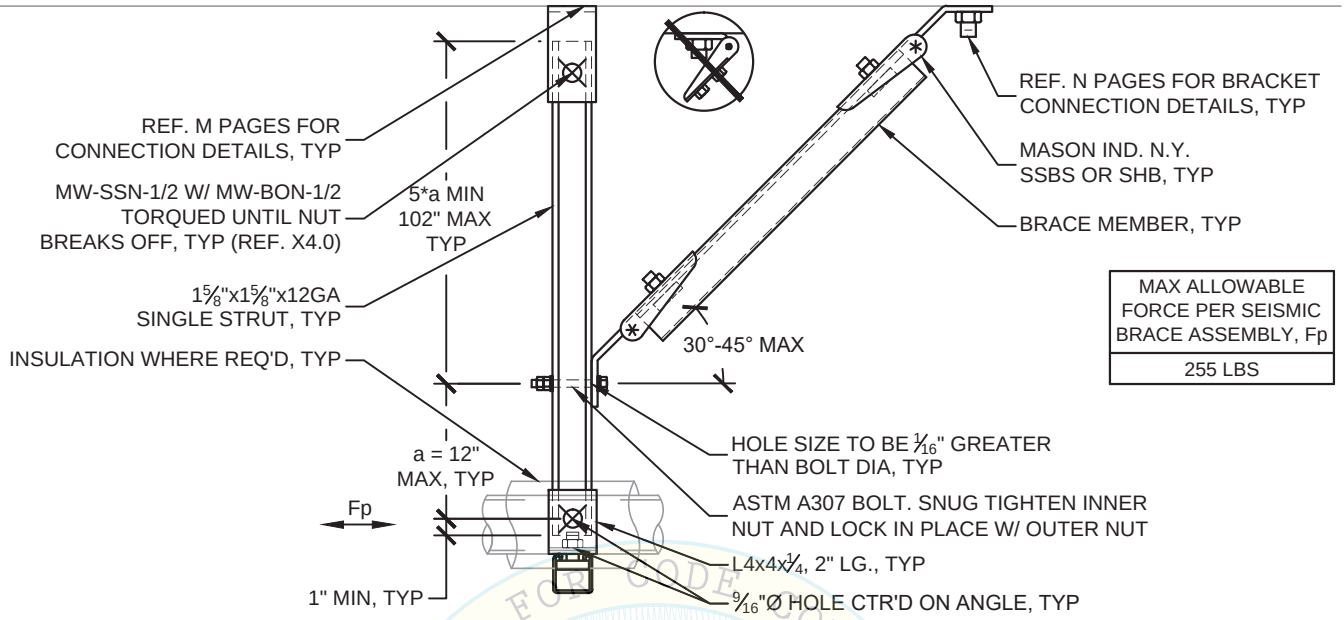

SINGLE STRUT OPTION

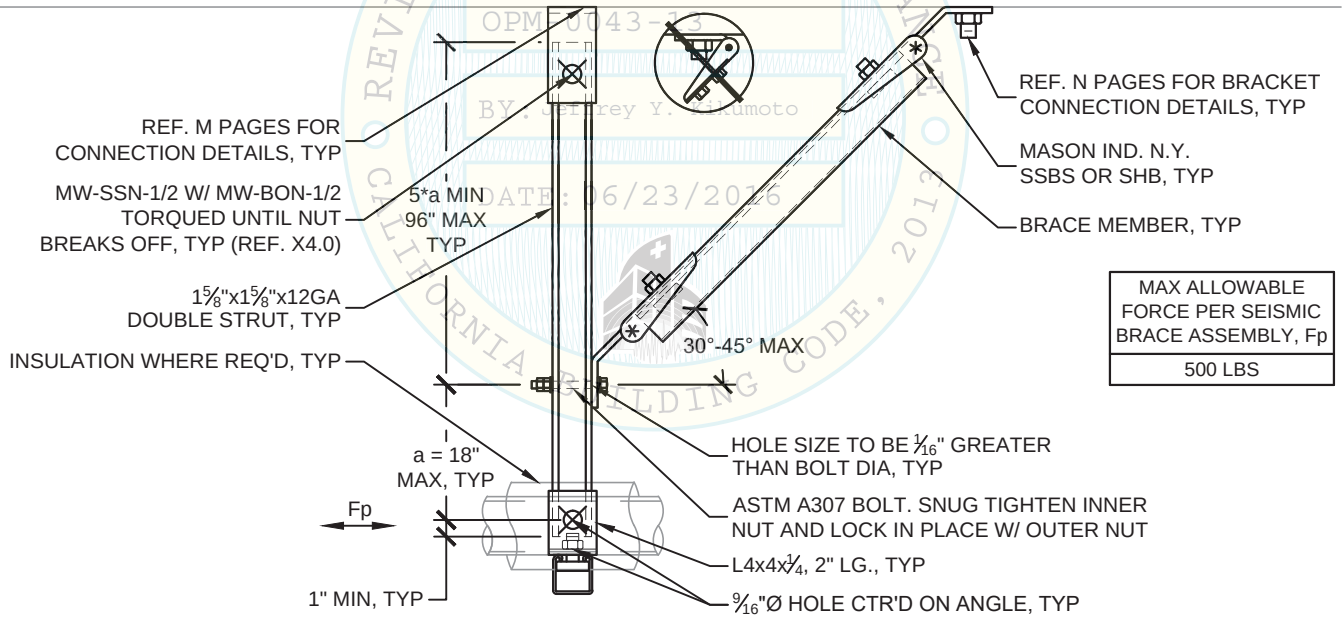

DOUBLE STRUT OPTION

NOTES:
1) REFER TO APPROPRIATE F PAGES FOR DIMENSIONS AND ANNOTATIONS NOT SHOWN.
2) SINGLE STRUT AND DOUBLE STRUT OPTIONS MAY CARRY UP TO A MAXIMUM OF 30LBS/FT OR 60LBS/FT, RESPECTIVELY.

MASON WEST, INC.
1601 E. Miraloma Ave. Placentia, CA 92870
TEL (714) 630 - 0701, www.masonwest.com

Jiefu "Jeff" Zhang, SE
California SE No. S5270

PAGE
A18.5

OSHPD
OPM-0043-13
REVIEWED FOR CODE COMPLIANCE
BY: Jeffrey Y. Kikumoto
DATE: 06/23/2016
CALIFORNIA BUILDING CODE, 2013

SEISMIC CABLE BRACING OFF STRUT HANGER TRANSVERSE OPTION FOR SUSPENDED PIPING ON TRAPEZE

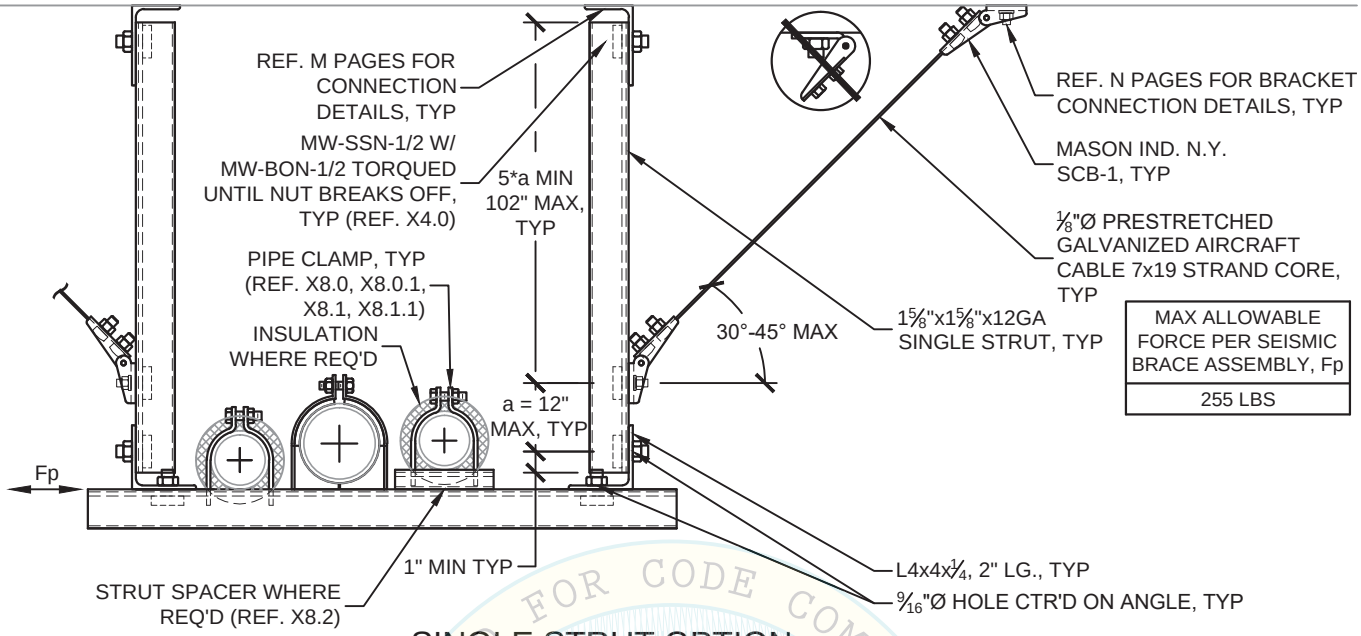

MAX ALLOWABLE FORCE PER SEISMIC BRACE ASSEMBLY, Fp
255 LBS

SINGLE STRUT OPTION

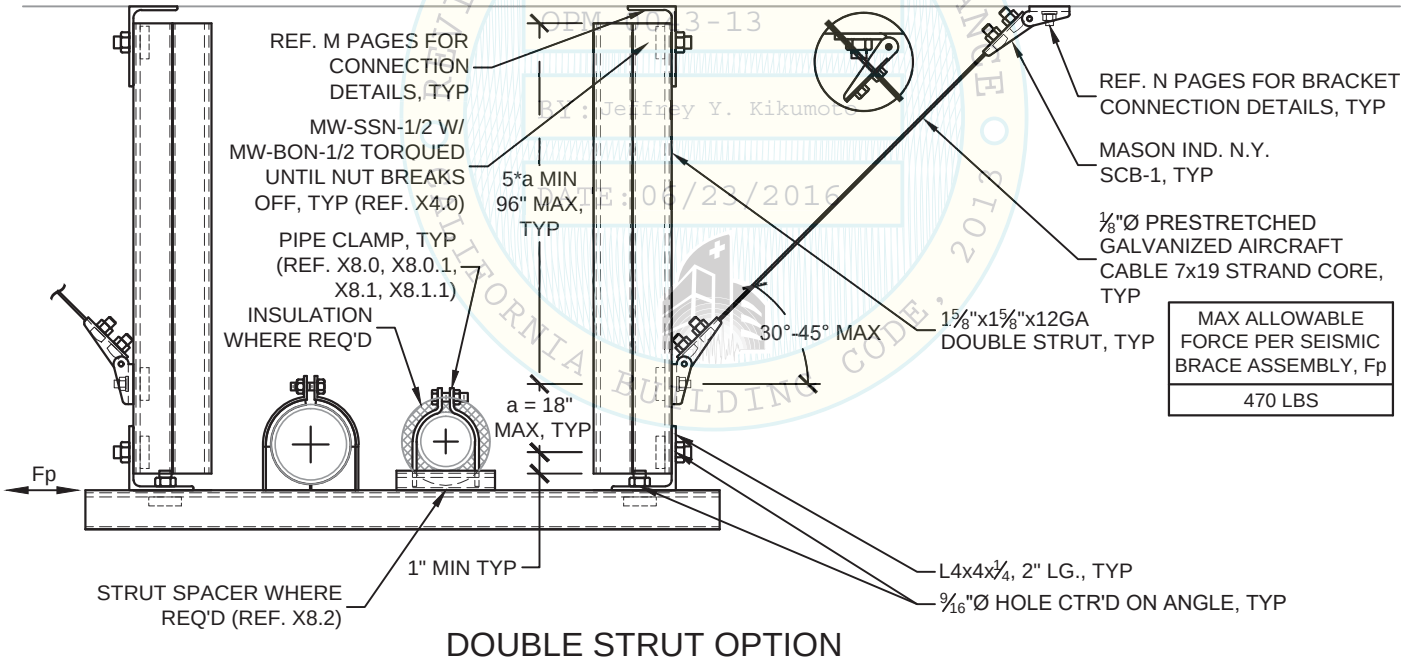

MAX ALLOWABLE FORCE PER SEISMIC BRACE ASSEMBLY, Fp
470 LBS

DOUBLE STRUT OPTION

NOTES:
1) REFER TO APPROPRIATE F PAGES FOR DIMENSIONS AND ANNOTATIONS NOT SHOWN.
2) SINGLE STRUT AND DOUBLE STRUT OPTIONS MAY CARRY UP TO A MAXIMUM OF 30LBS/FT OR 60LBS/FT, RESPECTIVELY.
3) REF. A18.6.1 FOR ALTERNATE INSTALLATION OPTIONS.

MASON WEST, INC.
1601 E. Miraloma Ave. Placentia, CA 92870
TEL (714) 630 - 0701, www.masonwest.com

Jiefu "Jeff" Zhang, SE
California SE No. S5270

PAGE
A18.6

REVIEWED FOR CODE COMPLIANCE OSHPD OPM-0043-13 Jeffrey Y. Kikumoto DATE: 06/23/2016 CALIFORNIA BUILDING CODE 2013

SEISMIC CABLE BRACING OFF STRUT HANGER
TRANSVERSE OPTION FOR SUSPENDED PIPING ON TRAPEZE

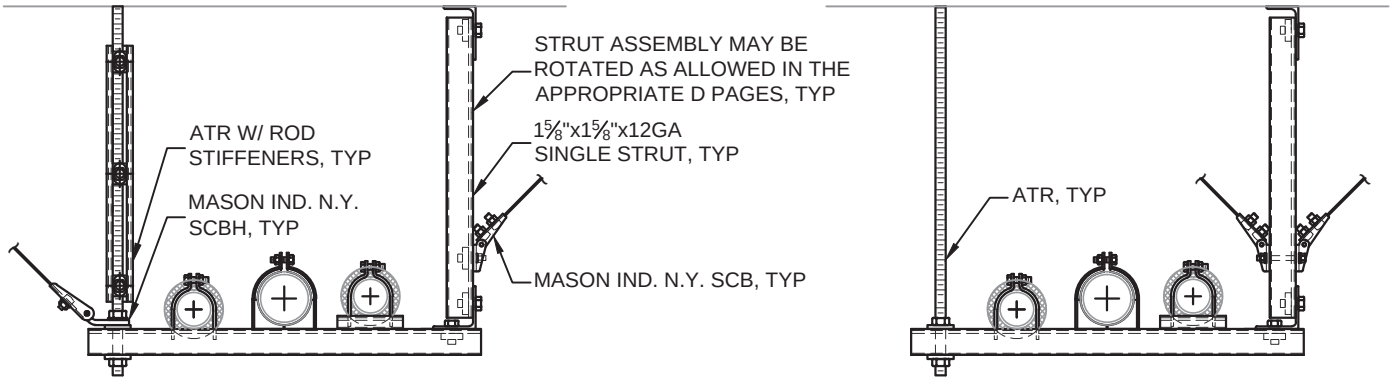

ALTERNATE INSTALLATION FOR SINGLE STRUT OPTION

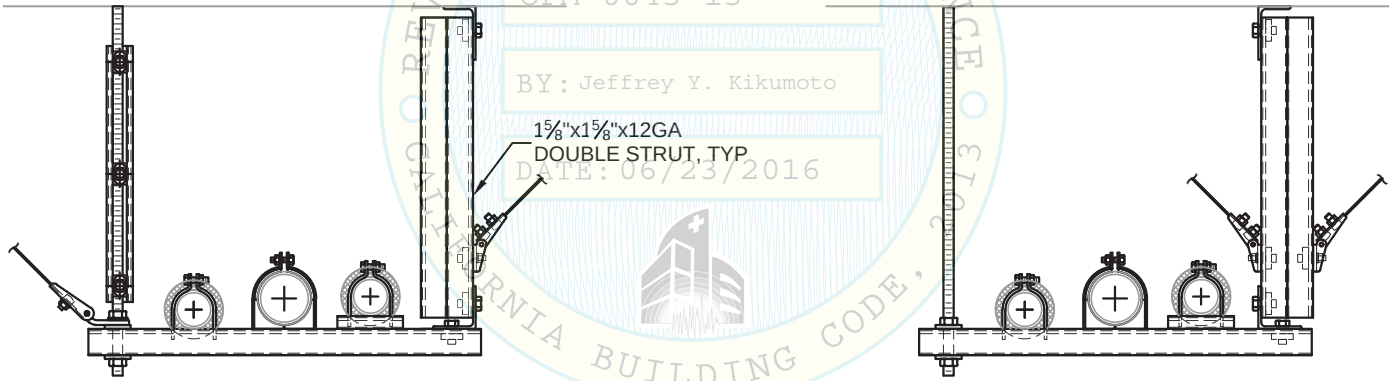

ALTERNATE INSTALLATION FOR DOUBLE STRUT OPTION

REVIEWED FOR CODE COMPLIANCE
2013 CALIFORNIA BUILDING CODE
oshpd
OPM-0043-13
BY: Jeffrey Y. Kikumoto
DATE: 06/23/2016

NOTES:
1) REFER TO A18.6 AND APPROPRIATE F PAGES FOR DIMENSIONS AND ANNOTATIONS NOT SHOWN.

MASON WEST, INC.
1601 E. Miraloma Ave. Placentia, CA 92870
TEL (714) 630 - 0701, www.masonwest.com

Jiefu "Jeff" Zhang, SE
California SE No. S5270

PAGE
A18.6.1

SEISMIC CABLE BRACING OFF STRUT HANGER
LONGITUDINAL OPTION FOR SUSPENDED PIPING ON TRAPEZE

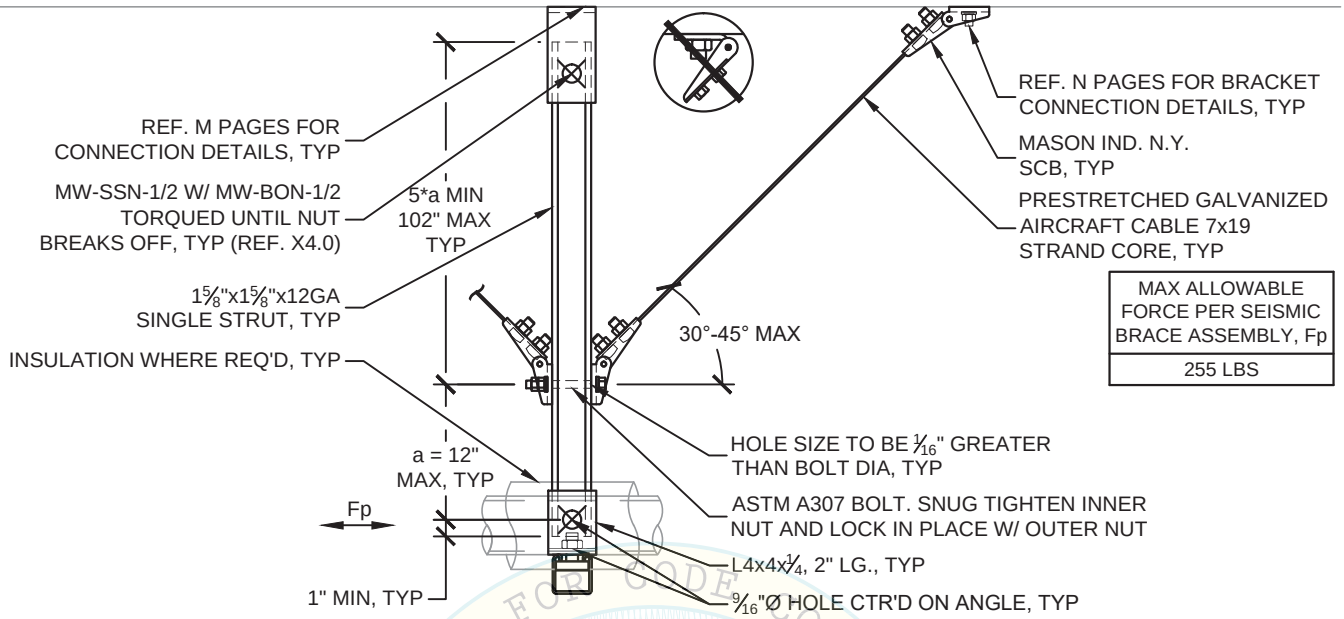

MAX ALLOWABLE FORCE PER SEISMIC BRACE ASSEMBLY, Fp
255 LBS

SINGLE STRUT OPTION

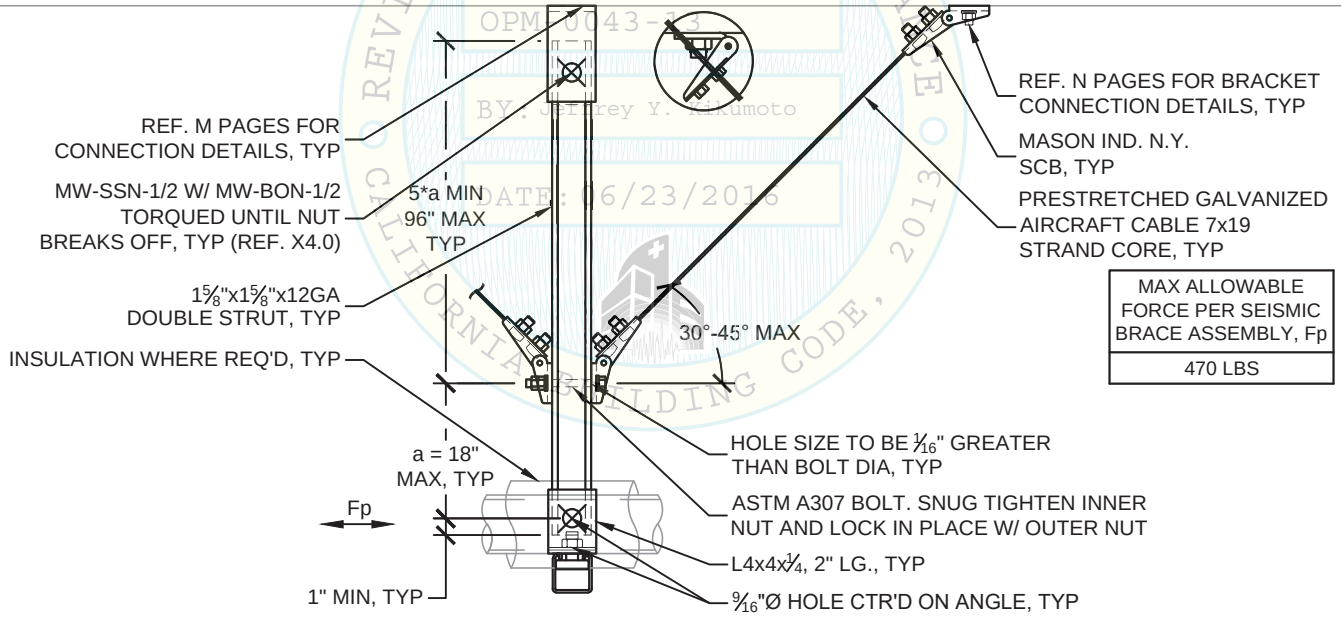

MAX ALLOWABLE FORCE PER SEISMIC BRACE ASSEMBLY, Fp
470 LBS

DOUBLE STRUT OPTION

NOTES:
1) REFER TO APPROPRIATE F PAGES FOR DIMENSIONS AND ANNOTATIONS NOT SHOWN.
2) SINGLE STRUT AND DOUBLE STRUT OPTIONS MAY CARRY UP TO A MAXIMUM OF 30LBS/FT OR 60LBS/FT, RESPECTIVELY.

MASON WEST, INC.
1601 E. Miraloma Ave. Placentia, CA 92870
TEL (714) 630 - 0701, www.masonwest.com

Jiefu "Jeff" Zhang, SE
California SE No. S5270

PAGE
A18.7

OSHPD OPM-0043-13 REVIEWED FOR CODE COMPLIANCE TO CALIFORNIA BUILDING CODE, 2013 BY: Jeffrey Y. Kikumoto DATE: 06/23/2016

SEISMIC SOLID BRACING PIPE CLAMP OPTION FOR INDIVIDUALLY SUSPENDED PIPING

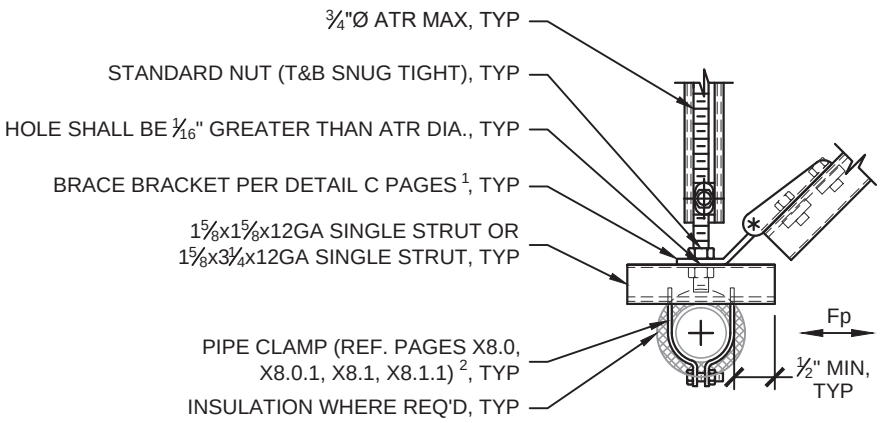

TRANSVERSE OPTION

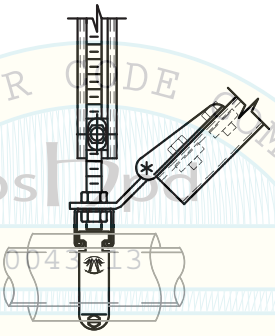

LONGITUDINAL OPTION

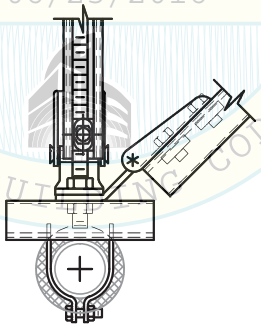

ALL-DIRECTIONAL OPTION

REVIEWED FOR CODE COMPLIANCE
CALIFORNIA BUILDING CODE, 2013
OSHPD
OPM-0043-13
BY: Jeffrey Y. Kikumoto
DATE: 06/23/2016

NOTES:
1) REFER TO APPROPRIATE DETAIL C PAGES FOR CALL-OUTS, DIMENSIONS AND NOTATIONS NOT SHOWN.
2) CLAMP RATING MAY LOWER MAX ALLOWABLE Fp.

MASON WEST, INC.
1601 E. Miraloma Ave. Placentia, CA 92870
TEL (714) 630 - 0701, www.masonwest.com

Jiefu "Jeff" Zhang, SE
California SE No. S5270

PAGE
A19.0

SEISMIC CABLE BRACING PIPE CLAMP OPTION FOR INDIVIDUALLY SUSPENDED PIPING

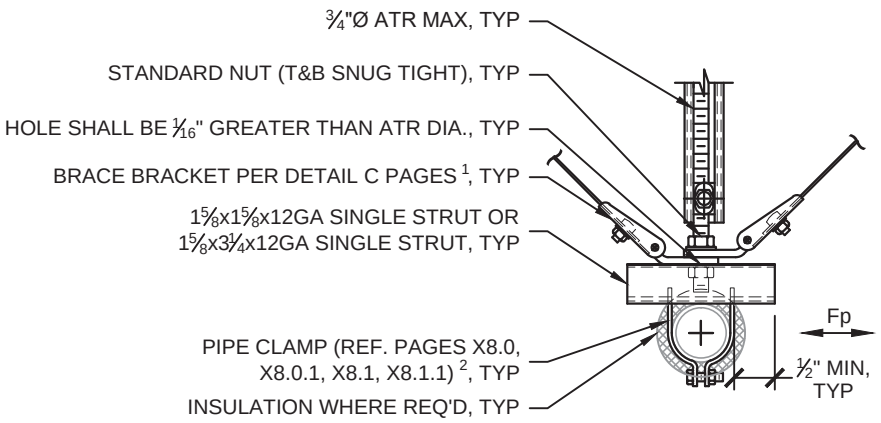

TRANSVERSE OPTION

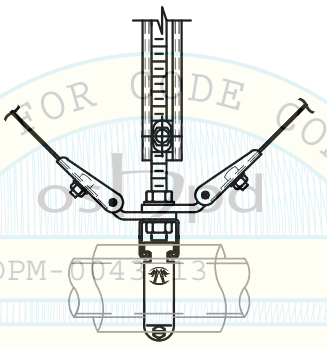

LONGITUDINAL OPTION

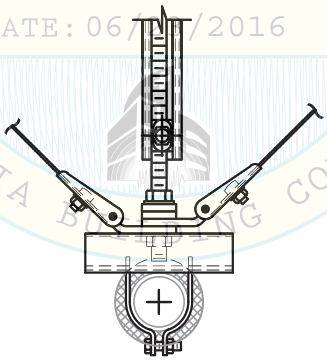

ALL-DIRECTIONAL OPTION

REVIEWED FOR CODE COMPLIANCE
CALIFORNIA BUILDING CODE, 2013
OPM-0043-13
BY: Jeffrey Y. Kikumoto
DATE: 06/23/2016

NOTES:
1) REFER TO APPROPRIATE DETAIL C PAGES FOR CALL-OUTS, DIMENSIONS AND NOTATIONS NOT SHOWN.
2) CLAMP RATING MAY LOWER MAX ALLOWABLE Fp.

MASON WEST, INC.
1601 E. Miraloma Ave. Placentia, CA 92870
TEL (714) 630 - 0701, www.masonwest.com

Jiefu "Jeff" Zhang, SE
California SE No. S5270

PAGE
A19.1

ELECTRICAL GENERAL NOTES

1) This OSHPD Preapproval of Manufacturer's Certification (OPM) is based on the 2013 CBC. The demand (design forces) for use with this OPM shall be based on the 2013 CBC.

2) Per ASCE 7-10, Section 13.3.1, restraints and their anchorages must be capable of restraining horizontal, F_P, and vertical, F_{PV}, seismic accelerations as follows.

$$F_P = (0.7)\frac{0.4a_P S_{DS} W_P}{R_P/I_P}\left(1+2\frac{z}{h}\right) \qquad \text{(ASD)} \qquad \text{(ASCE 7-10 EQ 13.3-1)}$$

is not required to be taken greater than $(0.7)1.6S_{DS}I_PW_P$ (ASD) (ASCE 7-10 EQ 13.3-2)

shall not be taken less than $(0.7)0.3S_{DS}I_PW_P$ (ASD) (ASCE 7-10 EQ 13.3-3)

$$F_{PV} = (0.7)0.2S_{DS}W_P \qquad \text{(ASD)}$$

Where:

- S_{DS} = short period spectral acceleration - up to 2.5g. Values of S_{DS} indicated in the general notes of the structural drawing take precedence over those calculated per ASCE 7-10, 11.4.4.
- W_P = component (or tributary length of raceway) operating weight (lbs/ft).
- I_P = component importance factor
  - = 1.5 for OSHPD 1 & 4 in accordance with 2013 CBC, Section 1616A.1.17 and for OSHPD 2 & 3, where required by ASCE 7, Section 13.1.3.
  - = 1.0 for OSHPD 2 & 3, when permitted by ASCE 7, Section 13.1.3.
- a_P = component amplification factor (Ref. ASCE 7-10, Table 13.6-1)
  - = 2.5 for electrical conduits and cable trays.
- R_P = component response modification factor (Ref. ASCE 7-10, Table 13.6-1)
  - = 6.0 for electrical conduits and cable trays.
- z = height in structure of point of connection of component with respect to base (ft).
- h = average roof height of structure with respect to base (ft).

3) For systems anchored to concrete only, the anchorage to concrete overstrength factor, Ωo, must be applied. Sections M & N provide alternate allowable load tables with and without Ωo applied. For cases where Ωo is applicable, use the appropriate tables in Sections M & N so it is not necessary to apply this factor when calculating F_P and F_{PV}. Ωo is not applicable if a yielding steel element is considered in the load path. Refer to ACI 318-11 Appendix D, Section D.3.3.4.3 for a list of qualifying conditions. The Registered Design Professional (RDP) shall use the allowable vertical loads under overstrength factor Ωo = 2.5 unless the vertical support complies with one of the qualifying conditions.

4) A complete description on how to use these guidelines is provided in Section A21. It includes specific examples for both using the enclosed details/charts and a layout procedure for bracing of suspended raceways.

FEDERAL OSHPD CODE COMPLIANCE
OSHPD Approved
BY: Jeffrey Y. Kikumoto
DATE: 06/23/2016
CALIFORNIA BUILDING CODE

MASON WEST, INC.
1601 E. Miraloma Ave. Placentia, CA 92870
TEL (714) 630 - 0701, www.masonwest.com

Jiefu "Jeff" Zhang, SE
California SE No. S5270

PAGE
A20.0

ELECTRICAL GENERAL NOTES (continued)

Notes on Seismic Bracing:

1) These guidelines list installations which may be exempt from bracing under the 2013 CBC. The RDP shall be responsible for determining whether to allow these exceptions, subject to approval by the SEOR and OSHPD.

2) Each straight run of a raceway requires a minimum of two transverse braces (perpendicular to the run). (Option: A longitudinal brace located at any point of the straight run on the opposite side of an elbow or tee may act as a transverse brace. Refer to the layout examples detailed in Section A22.)

3) Each straight run of a raceway requires a minimum of one longitudinal brace (parallel to the run). (Option: A transverse brace on the opposite side of an elbow or tee can act as a longitudinal brace. Refer to the layout examples detailed in Section A22.)

   Note: For items 2) and 3) above, a short run of a raceway may not require seismic bracing if its tributary seismic load transfers to an adjacent run of a raceway that is sufficiently seismically braced that can accept the additional seismic loads, when approved by OSHPD for a specific project.

4) Transverse and longitudinal braces that project to the overhead structure shall be installed between 30 and 60 degrees from horizontal. Braces that project to an adjacent wall may be installed directly horizontal (zero degrees) or between 30 and 60 degrees from the horizontal. However, this is limited depending on the capacity of the brace and method of connection to structure.

5) Seismic bracing may consist of solid bracing designed to accept loads in tension and compression or cable bracing designed to accept tension loads only. Each brace method requires a vertical hanger within close proximity of their connection to the distribution system. (Refer to the specific detail for limitations). The vertical hanger may or may not require stiffening or additional anchorage to the structure (Refer to Notes on Supports, Page A20.2).

6) Avoid mixing solid bracing with cable bracing in the same direction on any run of a distribution system unless specifically engineered and approved by the enforcement agency.

7) Avoid bracing a system to two different parts of a building which may act differently in response to an earthquake (i.e separated by a seismic joint). In cases where this may occur, the raceway run must be designed to accept the seismic relative displacement.

8) Systems with significant thermal motion shall be designed on a case by case basis by a professional engineer familiar with both seismic loading and thermal expansion.

9) Seismic brace details for suspended raceways include maximum allowable horizontal seismic load, F_P, at different brace angle ratios. The details include Mason Industries N.Y. seismic brace component size, aircraft cable or solid brace member size, acceptable hanger rod diameter(s) and hanger rod stiffening requirements. Trapeze member sizes and connection to structure for both hanger rods and seismic braces are tabulated and/or detailed in Sections B, T, M, and N, respectively.

10) Seismic brace requirements for seismic accelerations ranging from 0.25 to 1.0g (ASD) are tabulated in Sections B5 and B6. Each schedule is designed to a specific seismic acceleration and provides maximum transverse, longitudinal and all-directional brace spacings based on operating weight per lineal foot of the raceway. In addition, the schedules provide hanger rod and seismic brace connection options that meet the same criteria. For systems that require design for over 1.0g, the brace spacing is reduced (Refer to Page A20.5, note 3).

OSHPD
REVIEWED FOR CODE COMPLIANCE
BY: Jeffrey Y. Kikumoto
DATE: 06/23/2016
CALIFORNIA BUILDING CODE, 2013

MASON WEST, INC.
1601 E. Miraloma Ave. Placentia, CA 92870
TEL (714) 630 - 0701, www.masonwest.com

Jiefu "Jeff" Zhang, SE
California SE No. S5270

PAGE
A20.1

ELECTRICAL GENERAL NOTES (continued)

11) Stacked raceways that share support rods must be braced independently from one another. Each section of threaded rod between trapezes and/or the building structure is subject to vertical stiffening requirements.

12) Vertical drops from suspended pipe systems to equipment (or flexible connectors where applicable) may be braced using the transverse and longitudinal braces in this manual. Note: Do not exceed ½ of the maximum brace spacing as measured from the seismic brace to the equipment or flexible connector when bracing vertical drops. (Refer to the Figures on page A22.2) If the transverse or longitudinal brace cannot accept the full vertical drop, a seismic floor support designed for the applicable loads is required. Design of this support shall account for seismic relative displacement between floors and may require a flexible connection between the floor support and the first seismic brace location above.

13) Any system which crosses a building separation or seismic joint must be designed to accommodate the seismic relative displacement per ASCE 7-10 13.3.2, 13.3.2.1, and 13.3.2.2, or as specified by the engineer of record for approval by the enforcement agency.

Notes on Supports:

1) Where the seismic brace system incorporates the use of a threaded vertical hanger rod designed to carry gravity loads only, additional anchorage and/or stiffening may be required as detailed. General support of suspended raceways to carry gravity loads shall be determined by the engineer of record and/or mechanical code requirements. However, hanger rod connection details in this manual may be used as a guide for these supports. The use of "C-Clamps" designed to attach threaded rod to one side of a steel beam flange shall not be used unless they are provided with a restraining strap or hook to the opposite beam flange, equivalent to those specified in NFPA 13, Section 9.3.7 and approved from OSHPD.

2) Support rod capacity and its anchorage to the structure is an important part of a solid bracing system. Solid braces shall not be attached to existing systems or support rods designed for gravity loads unless they are checked for increased loads.

3) Threaded vertical hanger rods where seismic sway bracing is attached may require stiffening if the length of the rod exceeds the maximum unbraced rod length indicated on the kit installation detail in Sections C, E, and F. However, if the calculated compression on the rod due to combined gravity, the vertical brace component of the bracing system as a result of Fp, and Fpv loads is less than or equal to zero, no rod stiffening is required, regardless of rod length. A vertical rod stiffener using a 1⅝"x1⅝"x12ga strut channel or steel angle cut to the appropriate length and attached to the threaded rod with a minimum of two Mason Ind. N.Y. Type UCC or SRC clamps is required, as detailed in Sections C, E, and F. The contractor may substitute a break-off bolt set to a minimum of 10 ft-lbs. Rod stiffening strut may be solid, slotted or punched. Ref. X7.0 and X7.1 for strut member data.

4) Trapeze supports shall consist of 12 gauge single or double channel strut, steel angles or tube steel as tabulated in Sections B5, B6, T2, and T3. For gravity-only trapeze supports and trapeze supports where transverse seismic braces are installed, the acceptable size of the trapeze member is provided in the same section. For trapeze supports where longitudinal seismic braces are to be installed, the acceptable size of the trapeze member is also provided. Trapeze members may be provided with round holes sized for hanger rods. Ref. X7.0 and X7.1 for strut member data. In all cases, for analysis purposes, the following information is required: a) seismic 'g' coefficient, b) raceway weight per foot and c) maximum span between threaded rod supports. The trapezes shall be supported by threaded rods, with nuts and washers as detailed in Sections C, E, and F and with rod stiffeners as required per note 3.

5) Concrete overstrength factor, Ω_0, is not required for hanger supports designed for gravity only or hanger supports at seismic cable brace locations where seismic forces do not exceed 20% of the total forces.

OSHPD
REVIEWED FOR CODE COMPLIANCE
OPM-0043-13
BY: Jeffrey Y. Kikumoto
DATE: 06/23/2016
OFFICE OF STATEWIDE HEALTH PLANNING & DEVELOPMENT
BUILDING CODES

MASON WEST, INC.
1601 E. Miraloma Ave. Placentia, CA 92870
TEL (714) 630 - 0701, www.masonwest.com

Jiefu "Jeff" Zhang, SE
California SE No. S5270

PAGE
A20.2

ELECTRICAL GENERAL NOTES (continued)

Notes on Seismic Cable Bracing:

1) Cables shall be prestretched galvanized 7x19 strand core aircraft cable, with no limit to their installed length. Cables meet the following specifications: MIL-DTL-83420M with Amendment 2, Type 1 non-jacketed cable.

2) Cables shall be installed slightly slack, so as not to support gravity loads.

3) Cable shall connect the braced item to a building structural element. Cable shall have a bracket at each end to make the connections. The cable assembly, with connection brackets, shall be Mason Ind. N.Y. SCB or SCBH, refer to pages X1.0 & X1.1. Cable is held to end brackets with one or two bolts. Cable bolts shall be tightened to the torque values stated in the details or, in the case where break off nuts are provided, until the nut breaks off. Break off nuts are as manufactured by Mason West, Inc. (Refer to page X4.0).

4) The Mason Ind. N.Y. SCBH component can be used for connection directly to the threaded vertical hanger rod used for supporting system gravity loads as detailed in Sections C, E, and F.

5) The SCB bracket and cable (Ref. X1.0), SCBH bracket and cable (Ref. X1.1), UCC rod stiffener clamp (Ref. X3.0), and SRC rod stiffener clamp (Ref. X3.1) are manufactured by Mason Ind. N.Y. and are included (with accompanying hardware) in the kit options provided in Sections C, E, and F.

Notes on Seismic Solid (Rigid) Bracing:

1) Solid bracing members shall be 12 gauge channel strut or steel angle. Strut members shall be solid, slotted or punched. The details in Sections C, E, and F indicate the minimum solid brace size based on a maximum solid brace length. The charts on pages X2.0, X2.1, and X2.2 tabulate different solid brace member sizes for maximum installed lengths of 5'-0", 9'-6" or 14'-6". Ref. X7.0 and X7.1 for strut member data.

2) Solid brace members shall be connected to both the distribution system and the structure using the seismic solid brace components (Mason Ind. N.Y. Type SSBS, SHB, or SSB. Refer to pages X2.0, X2.1, or X2.2, respectively).

3) The attachment between the solid brace component and the 12 gauge channel strut shall consist of (1) or (2) 1/2" bolt and strut nut connections torqued to 50 ft-lbs or, in the case where break off nuts are provided, until the nut breaks off. Refer to Sections C, E, or F to determine the quantity of bolt/strut nut connections required. Break off nuts are as manufactured by Mason West, Inc. (Refer to page X4.0).

4) The SSBS bracket (Ref. X2.0), the SHB bracket (Ref. X2.1), the SSB bracket (Ref. X2.2), the UCC rod stiffener clamp (X3.0), and SRC rod stiffener clamp (Ref. X3.1) are manufactured by Mason Ind. N.Y. and are included (with accompanying hardware) in the kit options provided in Sections C, E, and F.

MASON WEST, INC.
1601 E. Miraloma Ave. Placentia, CA 92870
TEL (714) 630 - 0701, www.masonwest.com

Jiefu "Jeff" Zhang, SE
California SE No. S5270

PAGE
A20.3

ELECTRICAL GENERAL NOTES (continued)

Notes on Seismic Brace Attachment to Building Structure:

1) Attachment methods and hardware (connectors) used for seismic bracing attachment to building structural element is the critical factor in the design of seismic sway-bracing. Lightweight structures may limit the maximum spacing between seismic braces. The structural engineer of record shall determine the maximum allowable seismic loads that may be imposed on the building structure.

2) Attachment to different types of structures are addressed in these guidelines. Attachment types include reinforced normal or sand lightweight concrete (flat slabs, slabs poured in steel decking, walls or columns), fully grouted reinforced concrete masonry, hollow steel decking, steel framing, timber framing, and metal stud wall framing. Attachments may be made with pre- or post-installed concrete anchors, machine bolts, self-drilling and self-tapping screws, lag bolts, nails or in cases of steel on steel attachments, by arc-welding. Use of attachment methods not detailed in these guidelines must be engineered on an individual job basis subject to approval by the enforcement agency. Note: The structural engineer of record shall verify that attachment details specified by the RDP are in accordance with the design concept for the primary structure.

3) Expansion anchors shall be Hilti Kwik Bolt TZ, Powers Power-Stud+ SD1, Mason Ind. N.Y. SAS(E), or Powers Power-Stud+ SD2 for minimum 3000 psi concrete slabs, beams, or walls and concrete filled decks (sand light or normal weight) installed in accordance with ICC Reports ICC ESR 1917, 2818, 3037 or 2502, respectively. Hilti Kwik Bolt 3 expansion anchors shall be used to resist static & transient seismic tension & shear loads in uncracked, grout-filled concrete masonry. Expansion anchors designed to ICC-ES AC01 are limited to allowable stress design only in accordance with AC01 1.2. SEOR shall verify that: (1) masonry is not cracked as defined in ICC-ES AC01 Section 2.3; calculation required to show masonry wall would not crack under the design earthquake loads under all service load conditions; wall has to remain elastic; (2) masonry wall shall be fully grouted in accordance with ESR-1385 Section 3.2; (3) condition of use requirements in accordance with ESR-1385 Section 5.0 is satisfied. When expansion anchors are used, 50 percent of alternate bolts in a group shall be tension tested or torque tested per CBC 1913A.7. Testing shall be done in the presence of the special inspector and a report of the test results shall be submitted to the enforcement agency. If any anchors fail, test all previously untested anchors installed by the same trade until 20 consecutive anchors pass. Then resume the original test frequency. Refer to page A0.4 for test loads.

4) Concrete inserts shall be Mason West Type MW-PAL-A for installation in normal or sand lightweight concrete slabs or MW-CDI for installation in normal or sand lightweight concrete filled metal decks.

5) All welded attachments shall be minimum 70xx electrode welds. Minimum 60xx electrode welds may be used for steel thicknesses that are 12 gauge or less.

6) Metal decks for expansion anchor attachments and MW-CDI inserts shall be minimum 20 gauge with either a maximum 3 inch flute and minimum 1-1/2 inch cover or a maximum 1-1/2 inch flute and minimum 2-1/4 inch cover. Metal decks for MW-PAL-A insert shall be minimum 20 gauge with 3" flute and 3-1/4" cover. Refer to appropriate M2 and N2 pages for allowable deck anchor attachments. Concrete fill shall be minimum 3000 psi sand lightweight concrete. *Note:* Metal decks with minimum 3000 psi stone aggregate concrete fill may use the sand lightweight concrete deck charts.

7) Concrete attachments are based on specified anchor bolts or inserts. Substitution of alternate anchors must be approved by Mason West and the enforcement agency on a job by job basis.

8) When installing drilled-in anchors in existing non-prestressed reinforced concrete, use care and caution to avoid cutting or damaging reinforcing bars. When installing them in existing prestressed concrete, locate the prestressed tendons by using a non-destructive method and do not cut or damage the tendons during installation.

9) Attachments are provided for wide flange structural steel members, open web steel trusses as well as wood trusses, joists and beams in Sections N3.11-3.13, N4.10-4.13.

BY: Jeffrey Y. Kikumoto
DATE: 06/23/2016

MASON WEST, INC.
1601 E. Miraloma Ave. Placentia, CA 92870
TEL (714) 630 - 0701, www.masonwest.com

Jiefu "Jeff" Zhang, SE
California SE No. S5270

PAGE
A20.4

ELECTRICAL GENERAL NOTES (continued)

Notes on Suspended Raceways:

1) Per 2013 CBC Sections 1616A.1.18 and 1616A.1.23, ASCE 7-10 Section 13.1.4 and 13.6.5.6, design for the seismic forces are not required for Raceways where any of the following are satisfied:
   a) Component is positively attached to the structure; and the project is designated as Seismic Design Categories D, E or F; flexible connections are provided between the raceway and the component/equipment; and the raceway weighs 5 lbs/ft or less; or
   b) Trapeze assemblies are used to support raceways and the total operating weight of the raceway supported by trapeze assemblies is less than 10 lbs/ft; or
   c) The raceway is supported by hangers and each hanger in the raceway run is 12" or less in length from the raceway support point to the supporting structure. Where rod hangers are used with a diameter greater than 3/8", they shall be equipped with swivels, eye bolts or other devices to prevent inelastic bending of the rod; or
   d) The conduit is 2.5" trade size or smaller.

2) Section A23 of these guidelines details the "12 Inch Rule" exception described in Note 1c for Suspended Raceways.

3) Cable tray transverse and longitudinal brace spacing shall not exceed those specified by the manufacturer. Rigid Metal Conduit (RMC, Schedule 40 pipe) and Intermediate Metal Conduit (IMC) shall be braced at spacings tabulated in Section S. Longitudinal brace spacings shall not exceed 3 times the tabulated transverse brace spacings. For cases where multiple conduits with varying brace spacings are supported on a trapeze, the smallest brace spacing shall govern. The seismic design engineer may design brace spacings for Electrical Metal Tubing (EMT) and for trapezed conduits based on combined conduits sections and/or by adding steel strengthening sections on a job by job basis subject to approval by the enforcement agency.

4) Transverse restraints for cable trays shall be installed at general support locations. Cable trays must be positively fastened to the support as detailed in Section E.

5) Seismic restraints for trapeze supported conduit shall be attached to the trapeze member at the hanger locations as detailed in Section F. Conduits supported by trapezes at seismic brace locations shall utilize Mason West, Inc. Type SSC, strut steel clamp (Refer to Page X8.0) for Rigid Metal Conduit (RMC, Schedule 40 pipe) and for 2½" to 4" diameter EMT conduit, or Type SSCE, strut steel clamp up to 2" diameter EMT or IMC (Refer to Page X8.0) utilizing details in Section F.

6) The conduit weights tabulated in the appendix for RMC, IMC, and EMT materials consider the conduit full of water to approximate the maximum operating weight. Similarly, the cable tray weight tabulated in the same section consider the cable trays full of cable as allowed by the National Electrical Code(NEC).

7) If a 2 piece rod is used to support raceways, minimum engagement of the rod in the coupling nut shall be equal to the rod diameter. Rods shall be run up tight in the coupling nut.

8) For vertical support methods at seismic brace locations other than what are detailed in this manual, the seismic design engineer must provide calculations and/or testing of any additional components or materials (e.g. hangers, clamps, etc.) to comply with the 2013 CBC on a job by job basis subject to review and approval by the enforcement agency.

9) Electrical pull boxes installed directly in-line with the conduit systems (no flexes) may be supported and laterally braced as part of the conduit bracing system. Where necessary, consider the ability of the conduit(s) to transfer gravity and seismic loads to adjacent vertical supports and braces.

OPM-0043-13
BY: Jeffrey Y. Kikumoto
DATE: 06/21/2016

MASON WEST, INC.
1601 E. Miraloma Ave. Placentia, CA 92870
TEL (714) 630 - 0701, www.masonwest.com

Jiefu "Jeff" Zhang, SE
California SE No. S5270

PAGE
A20.5

ELECTRICAL GENERAL NOTES (continued)

Notes on Vertical Risers:

1) Vertical raceways supported at each floor shall be considered seismically braced if the penetration through each floor is tightly packed and the floor to floor spacing does not exceed the maximum brace spacing tabulated in Section S. Tops of risers exceeding 3 feet shall be provided with a 4-way brace. Where the 4-way brace is attached to the horizontal raceway, it shall be installed within 2 feet of the centerline of the riser.

2) Vertical raceways in an open shaft must be attached to steel supports with both steel supports and connections sized to accept the combined gravity and seismic loads. Thermal loads shall be considered, where applicable. Lateral seismic restraint spacings for conduit shall not exceed the spacings tabulated in Section S. Supports and connections must be engineered on a job by job basis subject to approval by the enforcement agency. Seismic relative displacement between floors shall be considered in the design.

REVIEWED FOR CODE COMPLIANCE
CALIFORNIA BUILDING CODE, 2013
oshpd
OPM-0043-13
BY: Jeffrey Y. Kikumoto
DATE: 06/23/2016

MASON WEST, INC.
1601 E. Miraloma Ave. Placentia, CA 92870
TEL (714) 630 - 0701, www.masonwest.com

Jiefu "Jeff" Zhang, SE
California SE No. S5270

PAGE
A20.6

ELECTRICAL DESIGN PROCEDURE

Follow the five steps below to determine the seismic kit installation, hanger and brace connection details that pertain to a specific suspended electrical system. An example is provided on the following pages.

Step 1. **Determine 'g' Forces:**
Calculate the lateral acceleration, F_P, and vertical acceleration, F_{PV}, in terms of 'g' using the equations outlined on page A20.0 for each level of the building.

Step 2. **Determine Operating Weight (lbs/ft or lbs):**
Determine the operating weight, W_P, of the distribution system (lbs/ft) or component (lbs) to be seismically braced. Refer to the appendix APP3.0 for raceway weights.

Step 3. **Determine Seismic Forces (lbs):**
Determine the maximum allowable brace spacings from page A20.5, note 3 and Section S. *If you choose to use the pre-designed schedules in Section B, skip the remainder of this step.*
Calculate the maximum lateral and vertical forces applied to the seismic brace system. Resolve the maximum lateral force to the brace, F_P, and maximum load on the hanger rod, T_{Rod}.

For trapeze supported conduit, determine the maximum allowable brace spacing from page A20.5, Section S and Section X8.0. *If you choose to use the pre-designed schedules in Section B, skip the remainder of this step.*
Calculate the maximum lateral and vertical forces applied to the seismic brace system. Resolve the maximum lateral force to the brace, F_P, and maximum load on the hanger rod, T_{Rod}.

The resultant compression load on the hanger rod at seismic brace locations may be calculated to determine if rod stiffening is required.

Check trapeze seismic attachment to conduit. Use tables in Section S4 to check the capacities of the strut clamps to strut trapezes.

Step 4. **Select Seismic Kit Installation, Hanger and Brace connection Details:** Select the appropriate details from the schedules in Section B for individually suspended conduit or raceways on trapeze based on maximum 'g' force, system weight per foot or conduit size and maximum transverse, longitudinal and all directional brace spacing.
If you calculated the seismic forces in step 3, verify the details selected are correct by comparing the calculated lateral force, F_P, and load on the hanger rod, T_{Rod}, with the rated loads tabulated on the detail sheets. If F_P and T_{Rod} are less than or equal to the tabulated rated loads, the details are acceptable.

Step 5. **Select Trapeze Member (where applicable):**
Select the trapeze member from the tables in Section B or T for transverse, longitudinal and all-directional seismic braces based on 'g' force and maximum span of trapeze member.

REVIEWED FOR CODE COMPLIANCE
OSHPD
OPM-0043-13
BY: Jeffrey Y. Kikumoto
DATE 06/23/2016
CALIFORNIA BUILDING CODE

MASON WEST, INC.
1601 E. Miraloma Ave. Placentia, CA 92870
TEL (714) 630 - 0701, www.masonwest.com

Jiefu "Jeff" Zhang, SE
California SE No. S5270

PAGE
A21.0

ELECTRICAL DESIGN PROCEDURE (continued)

Example:

18" x 4" cable tray is suspended within a 3 story poured-in place concrete building with basement. The cable tray is supported at every 8 feet. The elevation of each floor, including the basement, is 15 feet. The short period spectral acceleration, S_{DS}, listed on the contract structural drawings, is 1.02. The component importance factor, $I_P = 1.5$.

Note: When anchoring to concrete, allowable loads have been reduced by the concrete overstrength factor, Ωo, where applicable, in Sections M & N. Therefore, Ωo is not used when calculating applied seismic forces in this example.

Step 1. **Determine 'g' Forces**

Component amplification and response modification factors for suspended cable trays are as follows:

$a_P = 2.5$; $R_P = 6.0$

Therefore,

$$F_P = (0.7)\frac{0.4(2.5)(1.02)W_P}{(6.0)/(1.5)}(1+2\frac{z}{h}) = 0.18(1+2\frac{z}{h})g$$

$$F_{P(min)} = (0.7)(0.3)(1.02)(1.5)W_P = 0.32g$$

$$F_{P(max)} = (0.7)(1.6)(1.02)(1.5)W_P = 1.71g$$

$$F_{PV} = (0.7)(0.2)(1.02)W_P = 0.14g$$

Tabulated below are the 'g' forces for each level of the building

Floor Level	F_P	F_{PV}
Basement	0.32g	0.14g
1	0.32g	0.14g
2	0.42g	0.14g
3	0.54g	0.14g

Step 2. **Determine Operating Weight (lbs/ft):**

From page APP3.0, the operating weight of a 18" x 4" cable tray is 27.0 lbs/ft.

OSHPD
OPM-0043-13
BY: Jeffrey Y. Kikumoto
DATE: 06/23/2016
CALIFORNIA BUILDING CODE, 2013 CODE COMPLIANCE

MASON WEST, INC.
1601 E. Miraloma Ave. Placentia, CA 92870
TEL (714) 630 - 0701, www.masonwest.com

Jiefu "Jeff" Zhang, SE
California SE No. S5270

PAGE
A21.1

ELECTRICAL DESIGN PROCEDURE (continued)

Step 3. **Determine Seismic Forces (lbs):**

From page A20.5 Note 3, the maximum transverse and longitudinal brace spacing for suspended cable tray is specified by the manufacturer. We will assume 40 feet transverse and 80 feet longitudinal brace spacing for this example.

Note: At this point, you have the option to calculate the seismic forces and loads on the hanger rods and complete this step or move on to step 4.

For Basement Level and Level 1,

F_P (Transverse) = 0.32 x 27.0 lbs/ft x 40 ft brace spacing = 346 lbs
F_P (Longitudinal) = 0.32 x 27.0 lbs/ft x 80 ft brace spacing = 691 lbs
F_{PV} = 0.14 x 27.0 lbs/ft x 8 ft support spacing = 30 lbs

Note: Fp does not need to be increased due to installation tolerances indicated in assembly details.

For seismic solid brace installations:

$T_{Rod} = F_P \tan(\text{brace angle}) + (27.0 \text{ lbs/ft} \times 8 \text{ ft} + F_{PV})/2 = 469$ lbs.

Note: Brace angle = 45 degrees for this example. Longitudinal loads considered split evenly to each rod.

For seismic cable brace installations:

$T_{Rod} = (27.0 \text{ lbs/ft} \times 8 \text{ ft} + F_{PV})/2 = 123$ lbs.

Note: In the case of cable trays, for seismic solid and cable brace T_{Rod} calculations, the gravity loads are assumed to be evenly distributed to each hanger. In the case of conduits on trapeze, for seismic solid and cable brace T_{Rod} calculations, 2/3 of the total gravity load is assumed as the worst case on each hanger. If this is not the case, make the necessary adjustment.

Similarly for Levels 2 and 3, F_P, F_{PV} and T_{Rod} are as tabulated below.

Floor Level	F_P	F_{PV}	T_{ROD}(Solid)	T_{ROD}(Cable)
Basement	346 lbs	30 lbs	469 lbs	123 lbs
1	346 lbs	30 lbs	469 lbs	123 lbs
2	454 lbs	30 lbs	577 lbs	123 lbs
3	583 lbs	30 lbs	706 lbs	123 lbs

$C_{Rod} = F_P \tan(\text{brace angle}) + F_{PV} - 0.9Wp$
$= 346 \text{ lbs} \times \tan(45 \text{ degrees}) + 30 \text{ lbs}/2 - 0.9 \times (27.0 \text{ lbs/ft} \times 8 \text{ ft})/2 = 264$ lbs.

Note: If $C_{Rod} \leq 0$, rod stiffeners are not required.

REVIEWED FOR CODE COMPLIANCE 2013 CALIFORNIA BUILDING CODE
OSHPD
OPM-0043-13
DATE: 06/23/2016

MASON WEST, INC.
1601 E. Miraloma Ave. Placentia, CA 92870
TEL (714) 630 - 0701, www.masonwest.com

Jiefu "Jeff" Zhang, SE
California SE No. S5270

PAGE
A21.2

ELECTRICAL DESIGN PROCEDURE (continued)

Step 4. **Select Seismic Kit Installation, Hanger and Brace connection Details:**

For an 18" x 4" cable tray with operating weight of 27.0 lbs/ft, acceptable seismic kit installation, hanger and connection details from the charts in Section B for each level of the building are as tabulated below.

Seismic Solid (Rigid) Brace, Hanger and Brace connection Details

Floor Level	Fp	Section B Page	Tran/Long Spacing	Kit Installation Details			Trans./ Long. Hanger Conn. Desig.	All Dir. Hanger Conn. Desig.	Brace Conn. Desig.
				Transverse	Longitudinal	All-Directional			
Basement	0.32g	B5.1	30'/60'	E1.20	E1.21	E1.22	50H	50M	50G
1	0.32g	B5.1	30'/60'	E1.20	E1.21	E1.22	50H	50M	50G
2	0.42g	B5.1	30'/60'	E1.20	E1.21	E1.22	50H	50M	50G
3	0.54g	B5.2	15'/30'	E1.20	E1.21	E1.22	50H	50M	50G

Seismic Cable (Standard) Brace, Hanger and Brace connection Details

Floor Level	Fp	Section B Page	Tran/Long Spacing	Kit Installation Details			Hanger Conn. Desig.	Brace Conn. Desig.
				Transverse	Longitudinal	All-Directional		
Basement	0.32g	B5.4	30'/60'	E2.20	E2.21	E2.22	50D	50G
1	0.32g	B5.4	30'/60'	E2.20	E2.21	E2.22	50D	50G
2	0.42g	B5.4	30'/60'	E2.20	E2.21	E2.22	50D	50G
3	0.54g	B5.5	15'/30'	E2.20	E2.21	E2.22	50D	50G

For calculated F_P and T_{ROD} select the appropriate details in Section E, M and N by comparing the calculated values with the tabulated values indicated on each detail.

Step 5. **Select Trapeze Member (where applicable):**

For cable tray on trapeze weighing 27.0 lbs/ft supported by a trapeze member with a maximum span between hanger rods of 48 in. and the seismic accelerations calculated in step 2, go to the tables in Section T3 to find the allowable trapeze members for transverse, longitudinal and all-directional seismic braces for each level of the building. For transverse brace spacing of 30 feet and longitudinal/all-directional brace spacing of 60 feet:

Trapeze Member at Longitudinal and All-Directional Brace Locations

Floor Level	Fp	Section T Page	Longitudinal	All-Directional
Basement	0.32g	T3.2	1-5/8" Single Strut	1-5/8" Single Strut
1	0.32g	T3.2	1-5/8" Single Strut	1-5/8" Single Strut
2	0.42g	T3.3	1-5/8" Single Strut	1-5/8" Single Strut
3	0.54g	T3.4	1-5/8" Single Strut	1-5/8" Single Strut

Refer to page T3.0 for trapeze member at transverse brace locations; for these cases, member to be 1-5/8" Single Strut.

MASON WEST, INC.
1601 E. Miraloma Ave. Placentia, CA 92870
TEL (714) 630 - 0701, www.masonwest.com

Jiefu "Jeff" Zhang, SE
California SE No. S5270

REVIEWED FOR CODE COMPLIANCE
OSHPD
OPM-0043-13
06/23/2016
CALIFORNIA BUILDING CODE 2013

ELECTRICAL DESIGN PROCEDURE (continued)

Example:

(5) 1½" and (6) 2" EMT conduits are suspended on the top of a trapeze support within a 3 story poured-in place concrete building with basement. The conduits are supported at every 8 feet. The elevation of each floor, including the basement, is 15 feet. The short period spectral acceleration, S_{DS}, listed on the contract structural drawings, is 1.02. The component importance factor, $I_P = 1.5$.

Note: When anchoring to concrete, allowable loads have been reduced by the concrete overstrength factor, Ωo, where applicable, in Sections M & N. Therefore, Ωo is not used when calculating applied seismic forces in this example.

Step 1. **Determine 'g' Forces**

Component amplification and response modification factors for suspended conduits are as follows:

$a_P = 2.5$; $R_P = 6.0$

Therefore,

$$F_P = (0.7)\frac{0.4(2.5)(1.02)W_P}{(6.0)/(1.5)}(1+2\frac{z}{h}) = 0.18(1+2\frac{z}{h})g$$

$$F_{P(min)} = (0.7)(0.3)(1.02)(1.5)W_P = 0.32g$$

$$F_{P(max)} = (0.7)(1.6)(1.02)(1.5)W_P = 1.71g$$

$$F_{PV} = (0.7)(0.2)(1.02)W_P = 0.14g$$

Tabulated below are the 'g' forces for each level of the building

Floor Level	F_P	F_{PV}
Basement	0.32g	0.14g
1	0.32g	0.14g
2	0.42g	0.14g
3	0.54g	0.14g

CODE COMPLIANCE
CALIFORNIA BUILDING CODE, 2013
ospd
OPM-0043-13
BY: Jeffrey Y. Kikumoto
DATE: 06/23/2016

Step 2. **Determine Operating Weight (lbs/ft):**

From page APP3.0, the operating weight of a (5) 1½" (2 lbs/ft) and (6) 2" (2.87 lbs/ft) EMT conduits is 27.0 lbs/ft.

MASON WEST, INC.
1601 E. Miraloma Ave. Placentia, CA 92870
TEL (714) 630 - 0701, www.masonwest.com

Jiefu "Jeff" Zhang, SE
California SE No. S5270

PAGE
A21.4

ELECTRICAL DESIGN PROCEDURE (continued)

Step 3. **Determine Seismic Forces (lbs):**

From page A20.5 Note 3, the maximum transverse and longitudinal brace spacing for suspended EMT is specified in Section S (Page S2.0). The maximum transverse brace spacing is governed by the smallest conduit size, in this case, 1½" EMT. For Basement and Level 1 F_P of 0.32g, the 0.375g column lists 33 feet, for Level 2 F_P of 0.4g, the 0.5g column lists 31 feet, and for Level 3 F_P of 0.54g, the 0.625g column lists 29 feet. If we interpolate between the 0.5g and 0.625g columns, the value for the maximum transverse brace spacing is 30 feet. Per note 3 on page S2.0, the maximum longitudinal brace spacing may be 3 times the transverse brace spacing, or 90 feet. We will limit it to 60 feet for this example.

Note: At this point, you have the option to calculate the seismic forces and loads on the hanger rods and complete this step or move on to step 4.

For Basement Level and Level 1,

F_P (Transverse) = 0.32 x 27.0 lbs/ft x 30 ft brace spacing = 259 lbs
F_P (Longitudinal) = 0.32 x 27.0 lbs/ft x 60 ft brace spacing = 518 lbs
F_{PV} = 0.14 x 27.0 lbs/ft x 8 ft support spacing = 30 lbs

Note: Fp does not need to be increased due to installation tolerances indicated in assembly details.

For seismic solid brace installations:

$T_{Rod} = F_P \tan(\text{brace angle}) + (27.0 \text{ lbs/ft} \times 8 \text{ ft} + F_{PV}) * (2/3) = 423$ lbs.

Note: Brace angle = 45 degrees for this example. Longitudinal loads considered split evenly to each rod.

For seismic cable brace installations:

$T_{Rod} = (27.0 \text{ lbs/ft} \times 8 \text{ ft} + F_{PV}) * (2/3) = 164$ lbs.

Note: In the case of conduits on trapeze, for seismic solid and cable brace T_{Rod} calculations, 2/3 of the total gravity load is assumed as the worst case on each hanger. If this is not the case, make the necessary adjustment.

Similarly for Levels 2 and 3, F_P, F_{PV} and T_{Rod} are as tabulated below.

Floor Level	F_P	F_{PV}	T_{ROD}(Solid)	T_{ROD}(Cable)
Basement	259 lbs	30 lbs	423 lbs	164 lbs
1	259 lbs	30 lbs	423 lbs	164 lbs
2	340 lbs	30 lbs	504 lbs	164 lbs
3	437 lbs	30 lbs	601 lbs	164 lbs

$C_{Rod} = F_P \tan(\text{brace angle}) + F_{PV} - 0.9Wp$
$= 259 \text{ lbs} \times \tan(45 \text{ degrees}) + (2/3) * 30 \text{ lbs} - 0.9 \times (2/3) * (27.0 \text{ lbs/ft} \times 8 \text{ ft}) = 149$ lbs.

Note: If $C_{Rod} \leq 0$, rod stiffeners are not required.

Check the seismic clamps, MW-SSCE-15 (for 1½" EMT) and MW-SSCE-20 (for 2" EMT) for 30 feet transverse spacing and 60 feet longitudinal brace spacing on sheet S4.0. All brace spacings in chart meet or exceed the necessary brace spacings.

MASON WEST, INC.
1601 E. Miraloma Ave. Placentia, CA 92870
TEL (714) 630 - 0701, www.masonwest.com

Jiefu "Jeff" Zhang, SE
California SE No. S5270

PAGE
A21.5

REVIEWED FOR CODE COMPLIANCE OF CALIFORNIA BUILDING CODE, 2013
OSHPD
OPM-0043-13
Reviewed by: Jeffrey Kikumoto

ELECTRICAL DESIGN PROCEDURE (continued)

Step 4. **Select Seismic Kit Installation, Hanger and Brace connection Details:**

For a set of conduits with operating weight of 27.0 lbs/ft, acceptable seismic kit installation, hanger and connection details from the charts in Section B for each level of the building are as tabulated below.

Seismic Solid (Rigid) Brace, Hanger and Brace connection Details

Floor Level	Fp	Section B Page	Tran/Long Spacing	Kit Installation Details			Trans./ Long. Hanger Conn. Desig.	All Dir. Hanger Conn. Desig.	Brace Conn. Desig.
				Transverse	Longitudinal	All-Directional			
Basement	0.32g	B1.13	30'/60'	F1.20	F1.21	F1.22	50J	50M	50G
1	0.32g	B1.13	30'/60'	F1.20	F1.21	F1.22	50J	50M	50G
2	0.42g	B1.13	30'/60'	F1.20	F1.21	F1.22	50J	50M	50G
3	0.54g	B1.14	15'/30'	F1.20	F1.21	F1.22	50J	50M	50G

Seismic Cable (Standard) Brace, Hanger and Brace connection Details

Floor Level	Fp	Section B Page	Tran/Long Spacing	Kit Installation Details			Hanger Conn. Desig.	Brace Conn. Desig.
				Transverse	Longitudinal	All-Directional		
Basement	0.32g	B1.16	30'/60'	F2.20	F2.21	F2.22	50E	50G
1	0.32g	B1.16	30'/60'	F2.20	F2.21	F2.22	50E	50G
2	0.42g	B1.16	30'/60'	F2.20	F2.21	F2.22	50E	50G
3	0.54g	B1.17	15'/30'	F2.20	F2.21	F2.22	50E	50G

For calculated F_P and T_{ROD} select the appropriate details in Section F, M and N by comparing the calculated values with the tabulated values indicated on each detail.

Step 5. **Select Trapeze Member (where applicable):**

For a set of conduits on trapeze weighing 27.0 lbs/ft supported by a trapeze member with a maximum span between hanger rods of 48 in. and the seismic accelerations calculated in step 2, go to the tables in Section T2 to find the allowable trapeze members for transverse, longitudinal and all-directional seismic braces for each level of the building. For transverse brace spacing of 30 feet and longitudinal/all-directional brace spacing of 60 feet:

Trapeze Member at Longitudinal and All-Directional Brace Locations

Floor Level	Fp	Section T Page	Longitudinal	All-Directional
Basement	0.32g	T2.2	(2) 13/16" Double Strut	(2) 13/16" Double Strut
1	0.32g	T2.2	(2) 13/16" Double Strut	(2) 13/16" Double Strut
2	0.42g	T2.3	3-1/4" Single Strut	3-1/4" Single Strut
3	0.54g	T2.4	3-1/4" Single Strut	3-1/4" Single Strut

Refer to page T2.0 for trapeze member at transverse brace locations; for these cases, member to be 1-5/8" Single Strut.

MASON WEST, INC.
1601 E. Miraloma Ave. Placentia, CA 92870
TEL (714) 630 - 0701, www.masonwest.com

Jiefu "Jeff" Zhang, SE
California SE No. S5270

REVIEWED FOR CODE COMPLIANCE
OSHPD
OPM-0043-13
06/23/2016
CALIFORNIA BUILDING CODE 2013

LAYOUT OF SEISMIC BRACES FOR INDIVIDUALLY SUSPENDED CONDUIT

Step 1. Separate the layout of the system into individual straight runs. A straight run is defined as a section of the utility between changes in direction. If an offset(s) occurs between changes of direction it may be neglected if the distance perpendicular to the run is less than the offset length, $\frac{S}{10}$, where S is the maximum transverse brace spacing tabulated in Section S.

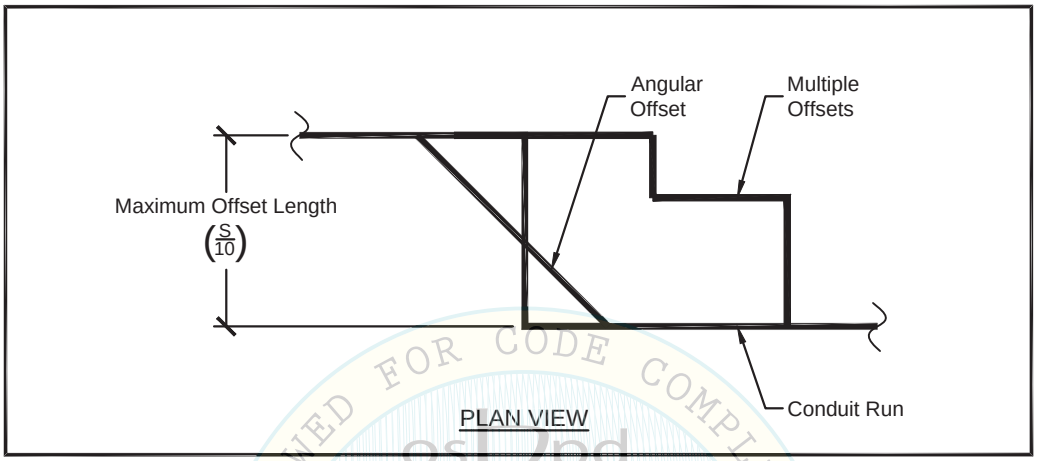

REVIEWED FOR CODE COMPLIANCE TO CALIFORNIA BUILDING CODE 2013
OPM-0043-13
BY: Jeffrey Y. Kikumoto
DATE: 06/23/2016

Step 2. Each straight run must be braced in the transverse direction (perpendicular to the run) at each end.

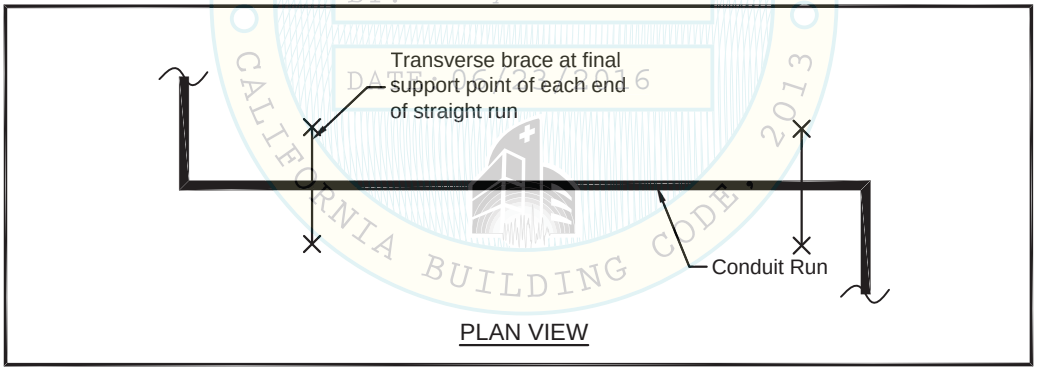

MASON WEST, INC.
1601 E. Miraloma Ave. Placentia, CA 92870
TEL (714) 630 - 0701, www.masonwest.com

Jiefu "Jeff" Zhang, SE
California SE No. S5270

PAGE
A22.0

LAYOUT OF SEISMIC BRACES FOR INDIVIDUALLY SUSPENDED CONDUIT (continued)

Step 3. Add transverse braces, if required, to limit the spacing(s) to the maximum spacing indicated in Section S.

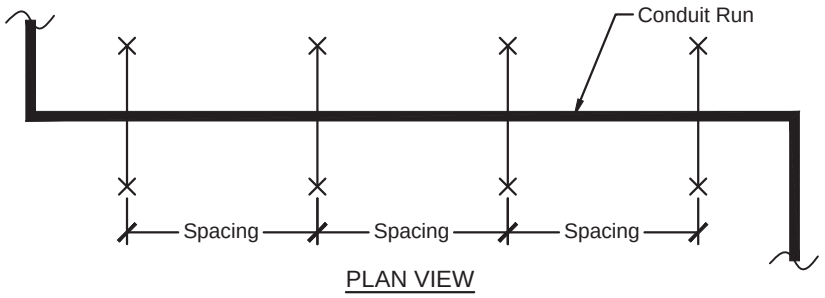

PLAN VIEW

Spacing ≤ **Maximum transverse brace spacing**

Step 4. Each straight run must be braced in the longitudinal direction (parallel to the run) with at least one brace. Transverse braces within the maximum offset length discussed in Step 1 may be used in addition to or in lieu of independent longitudinal braces. The length of conduit around a 90 degree turn (indicated as 'P' below) longitudinally braced from a transverse brace = L-0.5T-A, where:

L = Maximum Allowable Longitudinal Brace spacing (From Section S)
T = The distance between Transverse Braces
A = Offset Length ≤ Maximum Offset Length $\left(\frac{S}{10}\right)$

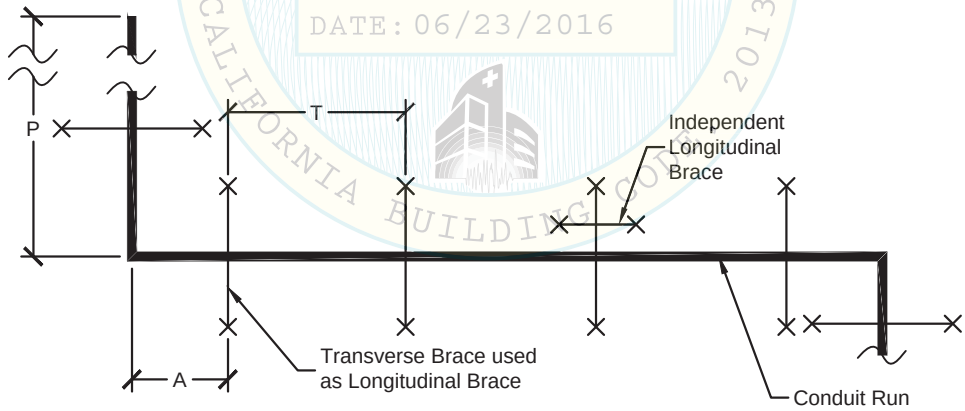

PLAN VIEW

OPM-0043-13
DATE: 06/23/2016
CALIFORNIA BUILDING CODE COMPLIANCE 2013

MASON WEST, INC.
1601 E. Miraloma Ave. Placentia, CA 92870
TEL (714) 630 - 0701, www.masonwest.com

Jiefu "Jeff" Zhang, SE
California SE No. S5270

PAGE
A22.1

LAYOUT OF SEISMIC BRACES FOR INDIVIDUALLY SUSPENDED CONDUIT (continued)

Step 5. Multiple changes in direction may be treated as one complete system. Straight runs greater than the maximum offset length require 2 transverse braces. Straight runs less than the maximum offset length may require as few as one or no braces. (See layout below)

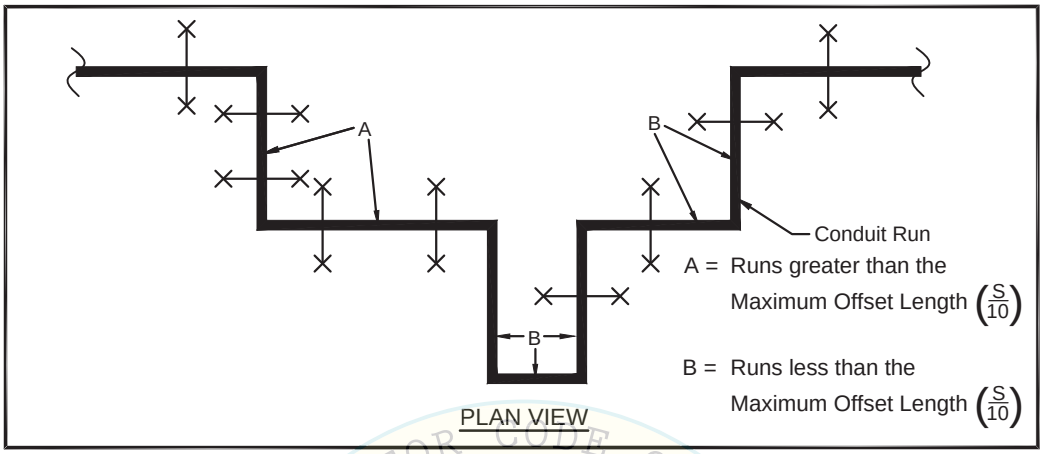

Step 6. Vertical drops to equipment must be restrained with a transverse brace at the final support point before the vertical drop. The distance from the transverse brace to the drop must be within the maximum offset length of the system. The maximum allowable length of the system braced from the transverse brace to the flexible connector is equal to ½ of the maximum transverse brace spacing indicated in Section S. If this distance is greater than ½ of the maximum transverse brace spacing, an additional brace is required at the end of the vertical drop by attaching to the floor. Consideration must be given to seismic relative displacements (SRD) imposed on conduit when braced to the floor.

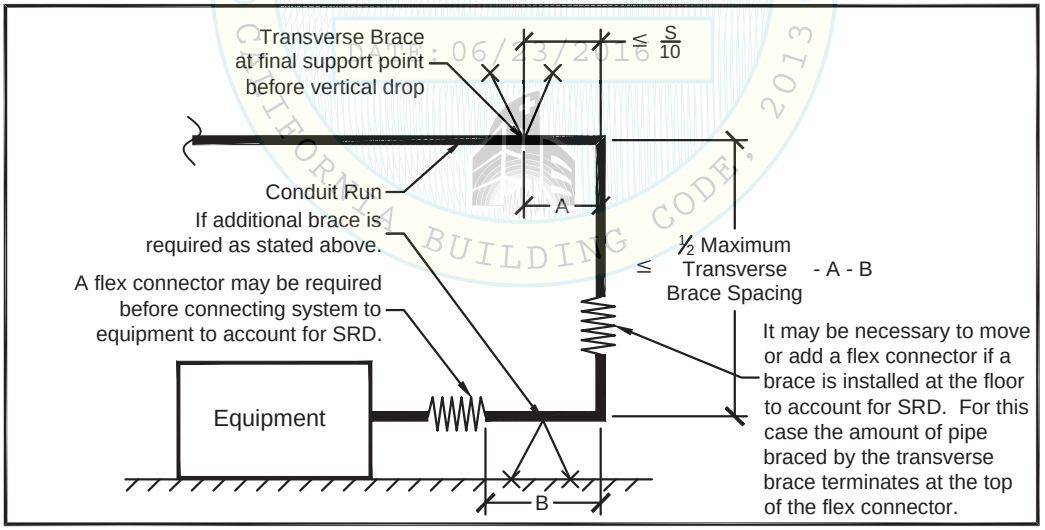

OSHPD APPROVED FOR CODE COMPLIANCE
OPM-0043-13
06/23/2016
CALIFORNIA BUILDING CODE, 2013

MASON WEST, INC.
1601 E. Miraloma Ave. Placentia, CA 92870
TEL (714) 630 - 0701, www.masonwest.com

Jiefu "Jeff" Zhang, SE
California SE No. S5270

PAGE
A22.2

LAYOUT OF SEISMIC BRACES FOR TRAPEZE SUSPENDED CABLE TRAYS

Step 1. Each straight run must be braced in the transverse direction (perpendicular to the run) at each end.

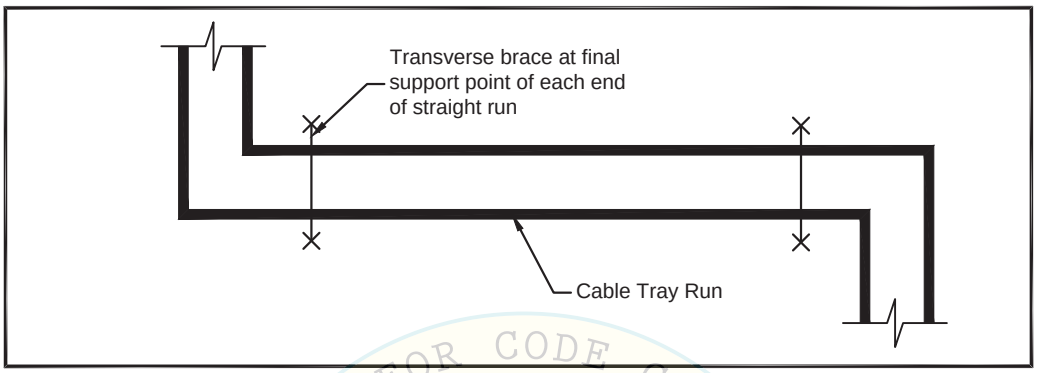

REVIEWED FOR CODE COMPLIANCE OF 2013 CALIFORNIA BUILDING CODE
OSHPD
OPM-0043-13
BY: Jeffrey Y. Kikumoto
DATE: 06/23/2016

Step 2. Add transverse braces, if required, to limit the spacing(s) to the maximum spacing indicated in Section A.

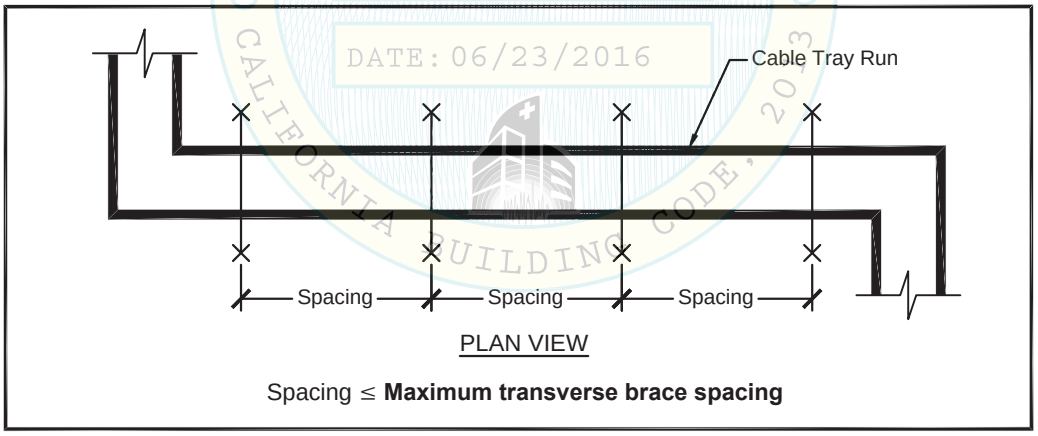

PLAN VIEW

Spacing ≤ **Maximum transverse brace spacing**

MASON WEST, INC.
1601 E. Miraloma Ave. Placentia, CA 92870
TEL (714) 630 - 0701, www.masonwest.com

Jiefu "Jeff" Zhang, SE
California SE No. S5270

PAGE
A22.3

LAYOUT OF SEISMIC BRACES FOR TRAPEZE SUSPENDED CABLE TRAYS (continued)

Step 3. Each straight run must be braced in the longitudinal direction (parallel to the run) with at least one brace.

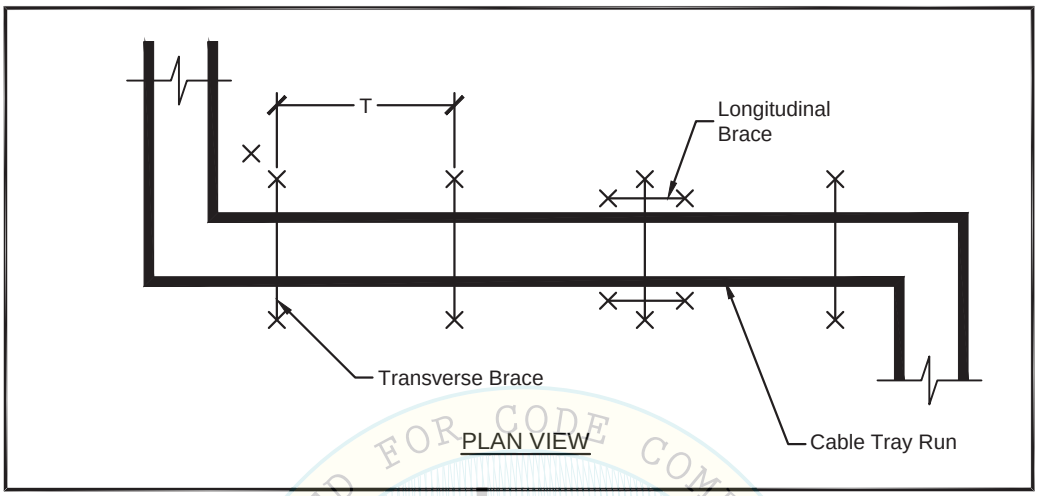

PLAN VIEW

REVIEWED FOR CODE COMPLIANCE
CALIFORNIA BUILDING CODE, 2013
osHpd
OPM-0043-13
BY: Jeffrey Y. Kikumoto
DATE: 06/23/2016

MASON WEST, INC.
1601 E. Miraloma Ave. Placentia, CA 92870
TEL (714) 630 - 0701, www.masonwest.com

Jiefu "Jeff" Zhang, SE
California SE No. S5270

PAGE
A22.4

LAYOUT OF SEISMIC BRACES FOR TRAPEZE SUSPENDED CONDUIT

Step 1a. Separate the layout of the system into individual straight runs. A straight run is defined as a section of the utility between changes in direction. If an offset(s) occurs between changes of direction it may be neglected if the distance perpendicular to each pipe run is less than the offset length, $\frac{S}{10}$, where S is the maximum transverse brace spacing tabulated in Section S.

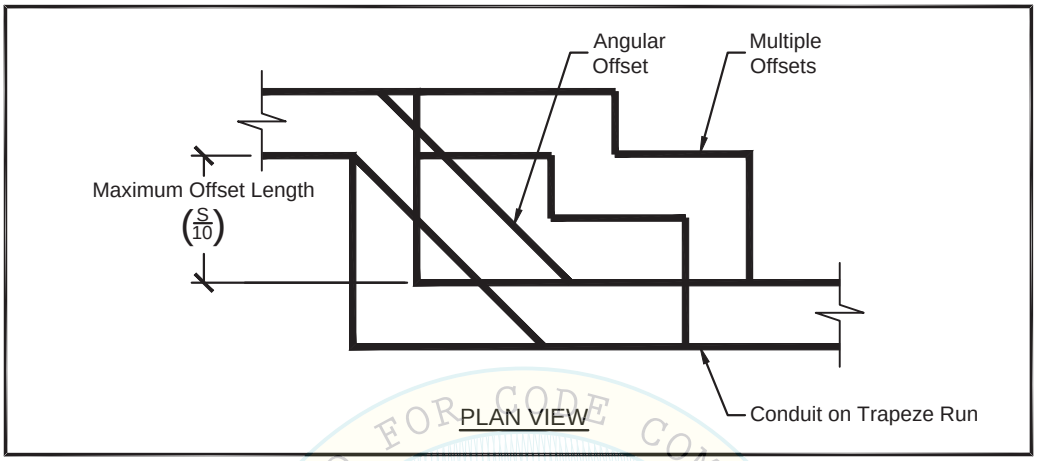

Step 2a. Each straight run must be braced in the transverse direction (perpendicular to the run) at each end.

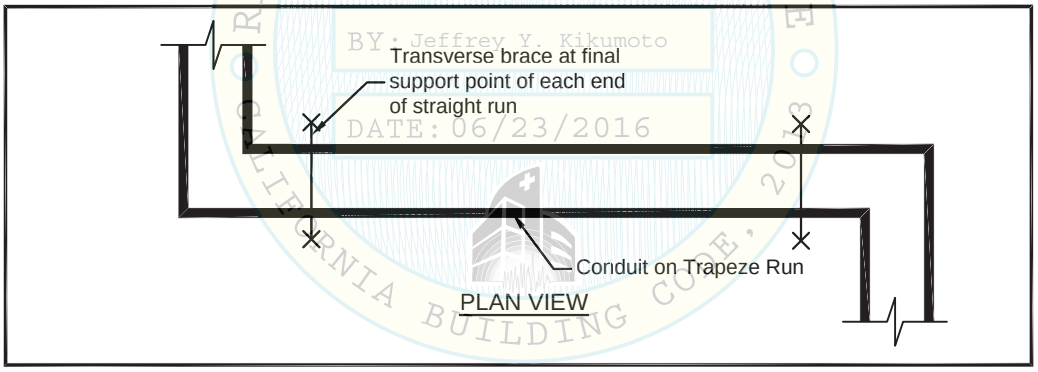

REVIEWED FOR CODE COMPLIANCE
osHpd
OPM-0043-13
BY: Jeffrey Y. Kikumoto
DATE: 06/23/2016
CALIFORNIA BUILDING CODE, 2013

MASON WEST, INC.
1601 E. Miraloma Ave. Placentia, CA 92870
TEL (714) 630 - 0701, www.masonwest.com

Jiefu "Jeff" Zhang, SE
California SE No. S5270

LAYOUT OF SEISMIC BRACES
TRAPEZE SUSPENDED FOR CONDUIT (continued)

Step 3a. Add transverse braces, if required, to limit the spacing(s) to the maximum spacing indicated in Section S.

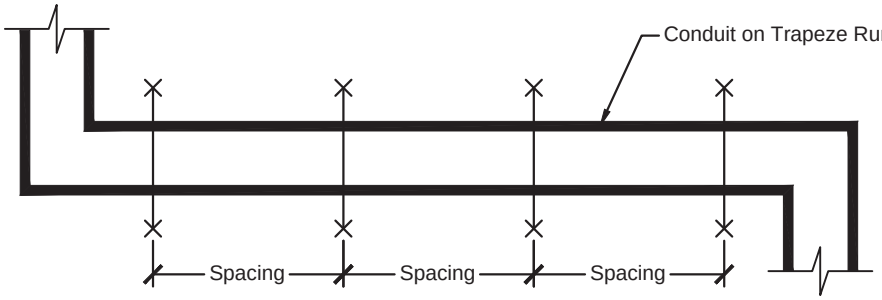

PLAN VIEW

Spacing ≤ **Maximum transverse brace spacing**

Step 4a. Each straight run must be braced in the longitudinal direction (parallel to the run) with at least one brace. Transverse braces within the maximum offset length discussed in Step 1 may be used in addition to or in lieu of independent longitudinal braces. The length of conduit around a 90 degree turn (indicated as 'P' below) longitudinally braced from a transverse brace = L-0.5T-A, where:

L = Maximum Allowable Longitudinal Brace spacing (From Section S)
T = The distance between Transverse Braces
A = Offset Length of Each Conduit ≤ Maximum Offset Length $\left(\frac{S}{10}\right)$

OSHPD
OPM-0043-13
BY: Jeffrey Y. Kikumoto
DATE: 06/23/2016
REVIEWED FOR CODE COMPLIANCE
CALIFORNIA BUILDING CODE 2013

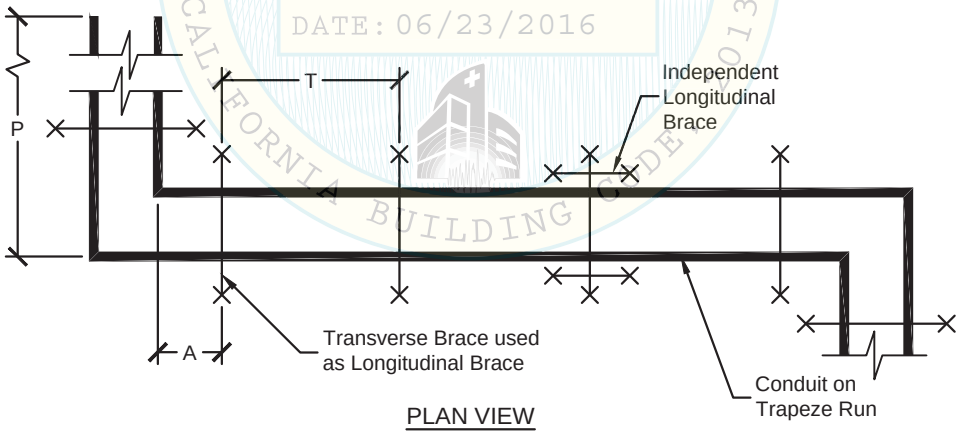

PLAN VIEW

MASON WEST, INC.
1601 E. Miraloma Ave. Placentia, CA 92870
TEL (714) 630 - 0701, www.masonwest.com

Jiefu "Jeff" Zhang, SE
California SE No. S5270

PAGE
A22.6

LAYOUT OF SEISMIC BRACES FOR TRAPEZE SUSPENDED CONDUIT (continued)

Step 5a. Multiple changes in direction may be treated as one complete system. Straight runs greater than the maximum offset length require 2 transverse braces. Straight runs less than the maximum offset length may require as few as one or no braces. (See layout below)

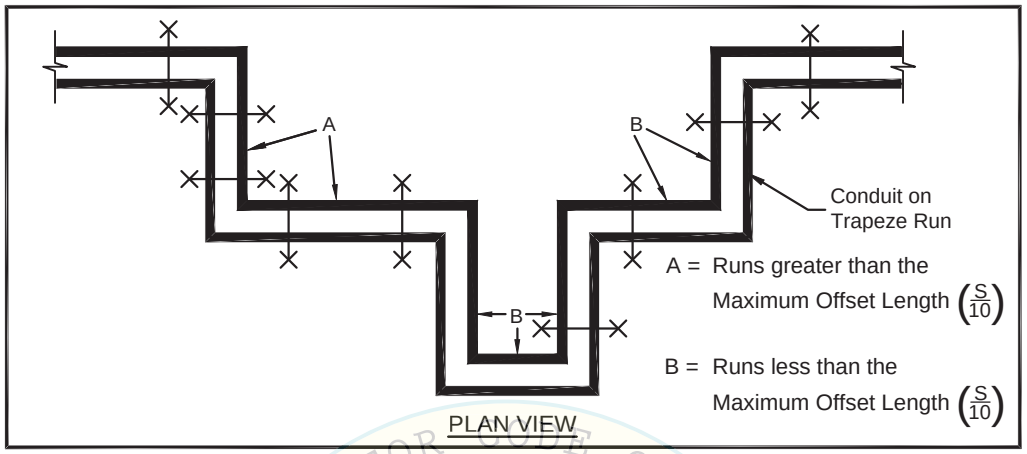

Step 6a. Vertical drops to equipment must be restrained with a transverse brace at the final support point before the vertical drop. The distance from the transverse brace to the drop must be within the maximum offset length of the system. The maximum allowable length of the system braced from the transverse brace to the flexible connector is equal to ½ of the maximum transverse brace spacing indicated in Section S. If this distance is greater than ½ of the maximum transverse brace spacing, an additional brace is required at the end of the vertical drop by attaching to the floor. Consideration must be given to seismic relative displacements (SRD) imposed on the conduit when braced to the floor.

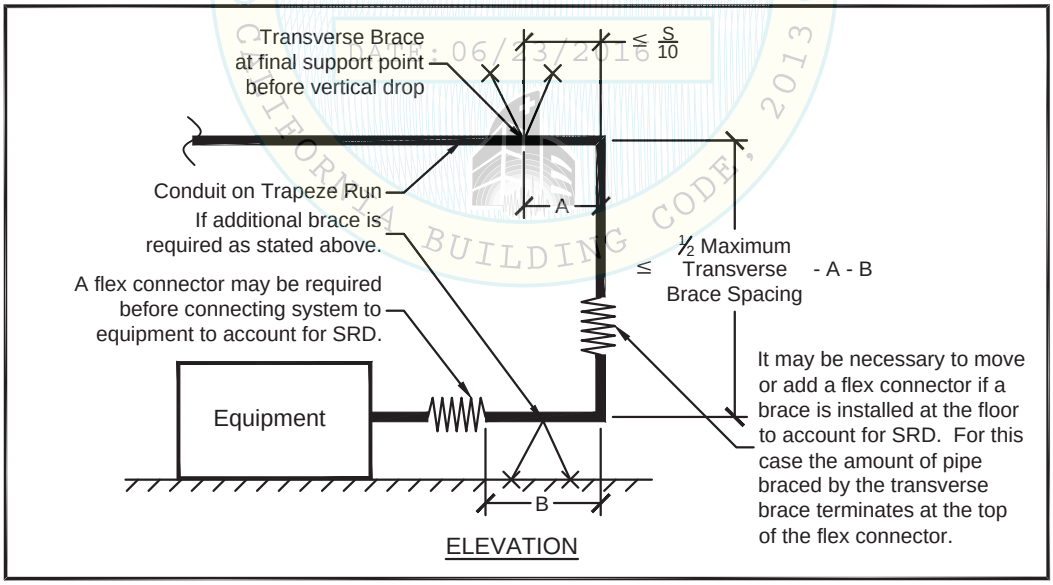

OPM-0043-13 06/23/2016 Reviewed for Code Compliance by Jeffrey Kikumoto
CALIFORNIA BUILDING CODE, 2013

MASON WEST, INC.
1601 E. Miraloma Ave. Placentia, CA 92870
TEL (714) 630 - 0701, www.masonwest.com

Jiefu "Jeff" Zhang, SE
California SE No. S5270

PAGE
A22.7

12" RULE FOR SUSPENDED RACEWAYS

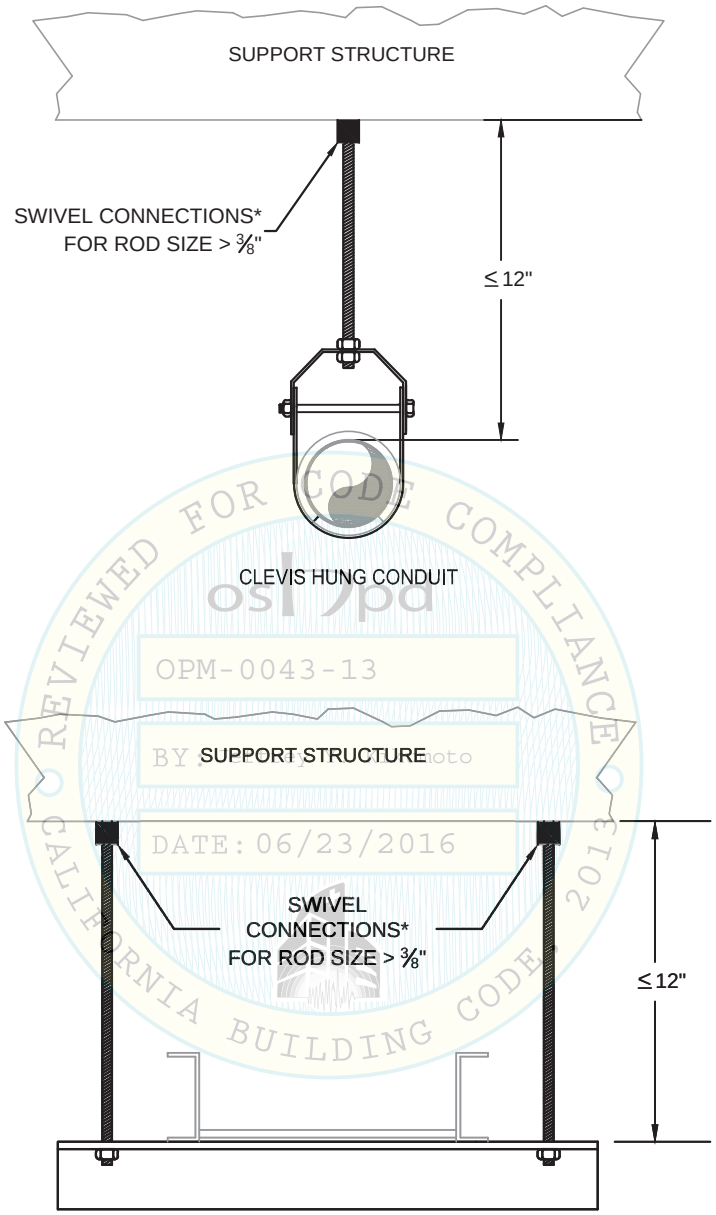

CONDUIT OR CABLE TRAY ON TRAPEZE

REVIEWED FOR CODE COMPLIANCE
CALIFORNIA BUILDING CODE 2013
OPM-0043-13
DATE: 06/23/2016

*NOTE: CONNECTIONS COMPLYING INCLUDE SWIVEL JOINTS, EYE BOLTS, ETC.

MASON WEST, INC.
1601 E. Miraloma Ave. Placentia, CA 92870
TEL (714) 630 - 0701, www.masonwest.com

Jiefu "Jeff" Zhang, SE
California SE No. S5270

PAGE
A23.0

TRANSVERSE BRACE ALLOWABLE ANGLE VARIATIONS IN PLAN FOR INDIVIDUALLY SUSPENDED CONDUIT

THE ANGLE VARIATION MAY INCREASE BEYOND 2.5 DEGREES UP TO 15 DEGREES PROVIDED THE TRANSVERSE BRACES ARE SKEWED IN THE SAME DIRECTION AND A LONGITUDINAL BRACE OCCURS OPPOSITE THE SKEWED ANGLE DIRECTION AS SHOWN BELOW.

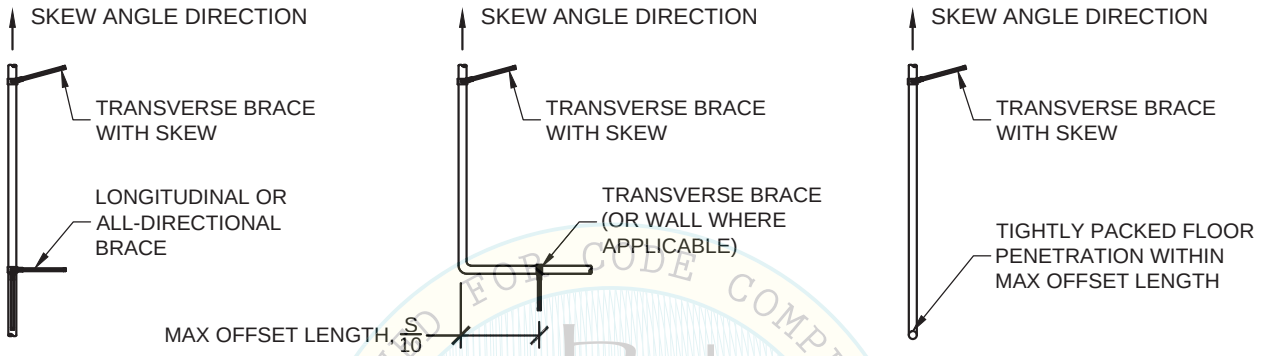

SOLID BRACE

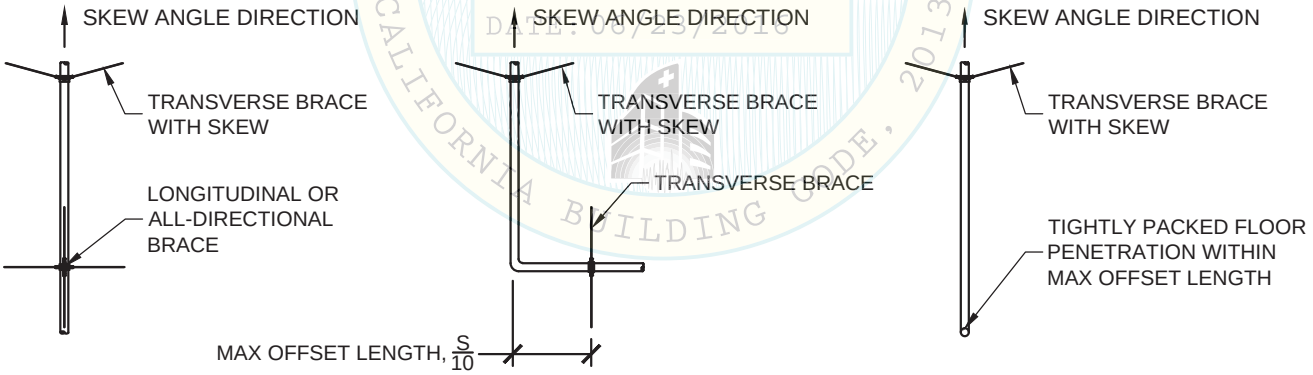

CABLE BRACE

NOTE: ANY OR ALL BRACE LOCATIONS ARE PERMITTED TO USE THE ANGLE VARIATION TO MEET FIELD CONDITIONS.

REVIEWED FOR CODE COMPLIANCE
CALIFORNIA BUILDING CODE, 2013
OSHPD
OPM 0043-13
BY: Jeffrey Y. Kikumoto
DATE: 06/23/2016

MASON WEST, INC.
1601 E. Miraloma Ave. Placentia, CA 92870
TEL (714) 630 - 0701, www.masonwest.com

Jiefu "Jeff" Zhang, SE
California SE No. S5270

PAGE
A24.0

TRANSVERSE BRACE ALLOWABLE ANGLE VARIATIONS IN PLAN FOR TRAPEZE SUSPENDED CABLE TRAY

THE ANGLE VARIATION MAY INCREASE BEYOND 2.5 DEGREES UP TO 15 DEGREES PROVIDED THE TRANSVERSE BRACES ARE SKEWED IN THE SAME DIRECTION AND A LONGITUDINAL BRACE OCCURS OPPOSITE THE SKEWED ANGLE DIRECTION AS SHOWN BELOW.

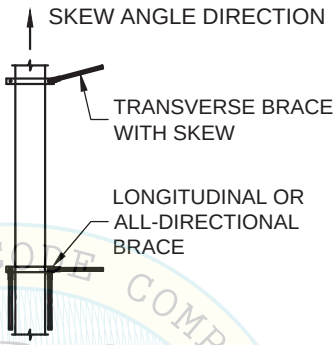

SOLID BRACE

REVIEWED FOR CODE COMPLIANCE
CALIFORNIA BUILDING CODE
OSHPD
OPM 0043-13
BY: Jeffrey Y. Kikumoto
DATE: 06/23/2016

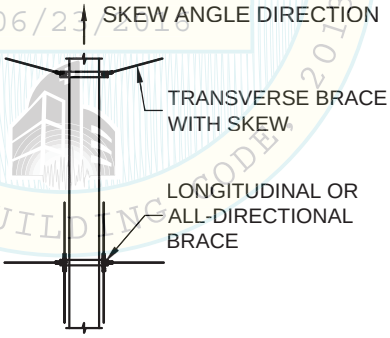

CABLE BRACE

NOTE: ANY OR ALL BRACE LOCATIONS ARE PERMITTED TO USE THE ANGLE VARIATION TO MEET FIELD CONDITIONS.

MASON WEST, INC.
1601 E. Miraloma Ave. Placentia, CA 92870
TEL (714) 630 - 0701, www.masonwest.com

Jiefu "Jeff" Zhang, SE
California SE No. S5270

PAGE
A24.1

TRANSVERSE BRACE ALLOWABLE ANGLE VARIATIONS IN PLAN FOR CONDUIT ON TRAPEZE

THE ANGLE VARIATION MAY INCREASE BEYOND 2.5 DEGREE UP TO 15 DEGREE PROVIDED THE TRANSVERSE BRACES ARE SKEWED IN THE SAME DIRECTION AND A LONGITUDINAL BRACE OCCURS OPPOSITE THE SKEWED ANGLE DIRECTION AS SHOWN BELOW.

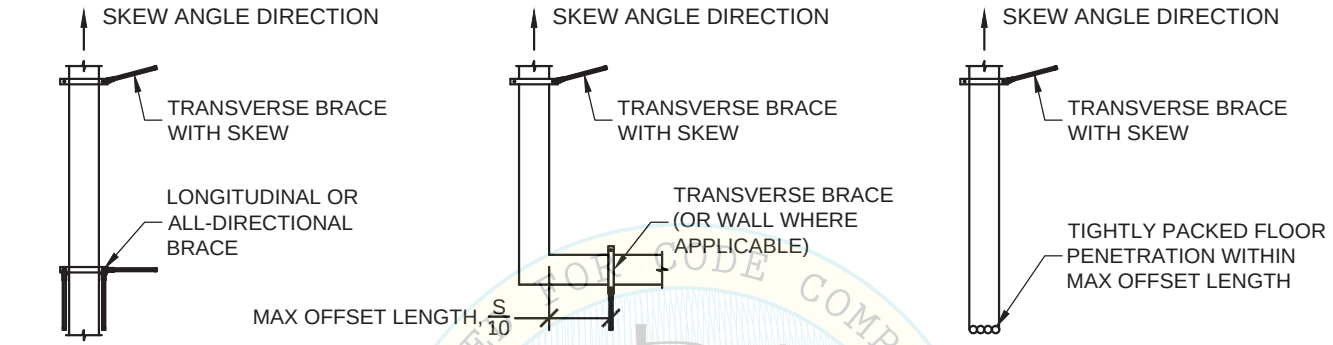

SOLID BRACE

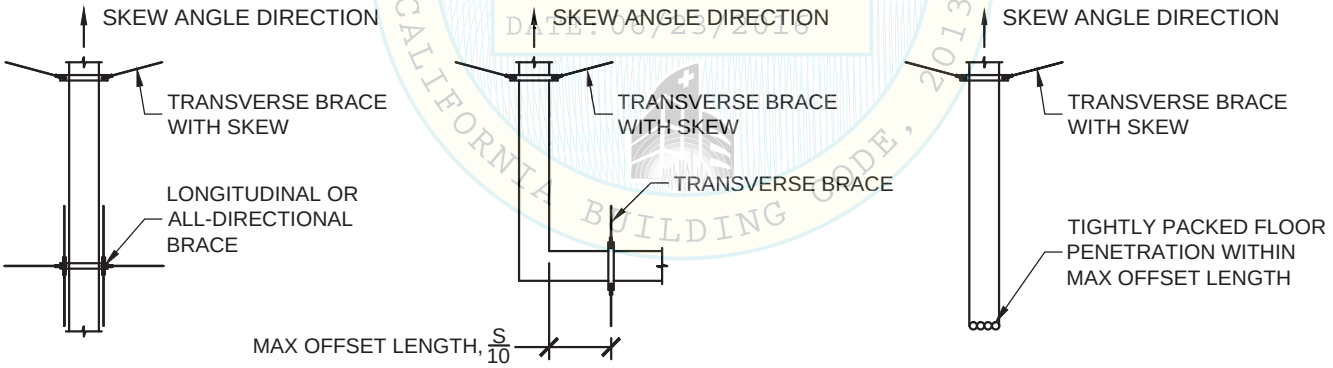

CABLE BRACE

NOTE: ANY OR ALL BRACE LOCATIONS ARE PERMITTED TO USE THE ANGLE VARIATION TO MEET FIELD CONDITIONS.

REVIEWED FOR CODE COMPLIANCE
CALIFORNIA BUILDING CODE, 2013
OSHPD
OPM-0043-13
BY: Jeffrey Y. Kikumoto
DATE: 06/23/2016

MASON WEST, INC.
1601 E. Miraloma Ave. Placentia, CA 92870
TEL (714) 630 - 0701, www.masonwest.com

Jiefu "Jeff" Zhang, SE
California SE No. S5270

PAGE
A24.2

ALTERNATE ARRANGEMENT OF SEISMIC BRACES FOR SUSPENDED RACEWAYS

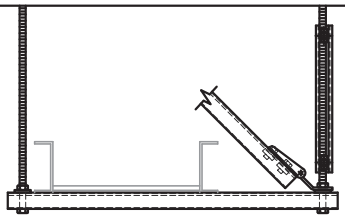

ELEVATION VIEW
SOLID BRACE INSTALLED
IN-BETWEEN HANGERS
(TRANSVERSE OR
ALL-DIRECTIONAL BRACE)

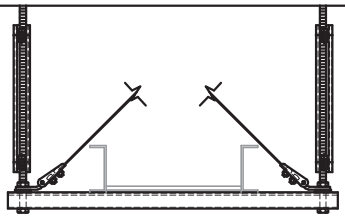

ELEVATION VIEW
CABLE BRACE INSTALLED
IN-BETWEEN HANGERS

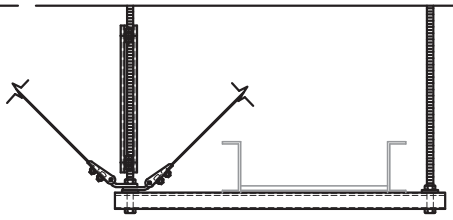

ELEVATION VIEW
CABLE BRACE INSTALLED AT
SINGLE HANGER
(TRANSVERSE BRACES ONLY)

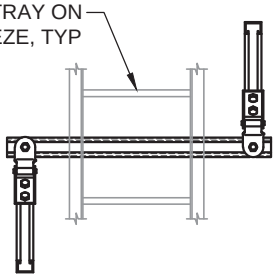

PLAN VIEW
LONGITUDINAL SOLID BRACES INSTALLED
IN ALTERNATING DIRECTIONS

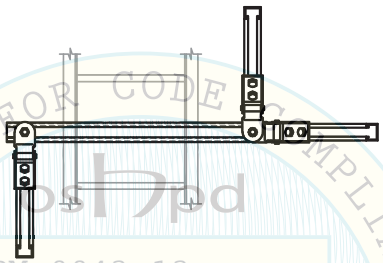

PLAN VIEW
ALL-DIRECTIONAL SOLID BRACES INSTALLED
IN ALTERNATING DIRECTIONS

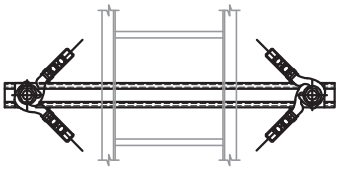

PLAN VIEW
CABLE X-PATTERN BRACE INSTALLED
IN-BETWEEN HANGERS

REVIEWED FOR CODE COMPLIANCE
OPM-0043-13
BY: Jeffrey Y. Kikumoto
06/23/2016
LA CITY BUILDING CODE

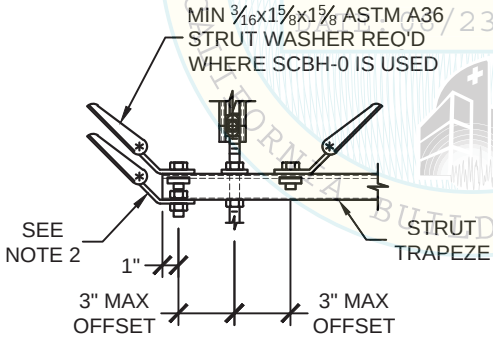

(TRANSVERSE
BRACE ONLY)

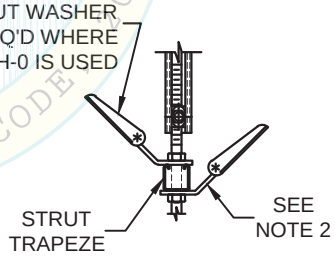

(LONGITUDINAL OR
ALL-DIRECTIONAL BRACE)

SEISMIC BRACE BRACKET OFFSET FROM HANGER RODS

NOTES:
1) REFER TO APPROPRIATE DETAIL PAGES FOR DIMENSIONS AND NOTATIONS NOT SHOWN.
2) WHEN INSTALLING SHB TO BOTTOM OF TRAPEZE, MW-KY SHB KEY IS REQ'D (REF. X2.4).

MASON WEST, INC.
1601 E. Miraloma Ave. Placentia, CA 92870
TEL (714) 630 - 0701, www.masonwest.com

Jiefu "Jeff" Zhang, SE
California SE No. S5270

PAGE
A25.0

ALTERNATE ARRANGEMENT OF SEISMIC BRACES FOR CONDUITS ON TRAPEZE

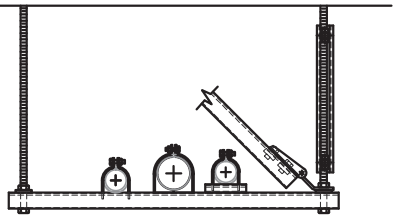

ELEVATION VIEW
SOLID BRACE INSTALLED
IN-BETWEEN HANGERS
(TRANSVERSE OR
ALL-DIRECTIONAL BRACE)

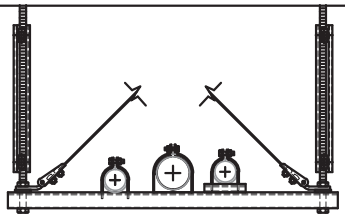

ELEVATION VIEW
CABLE BRACE INSTALLED
IN-BETWEEN HANGERS

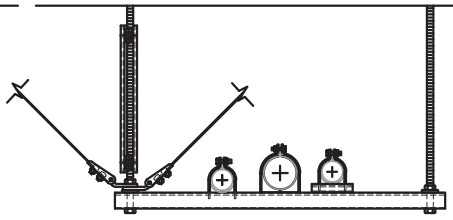

ELEVATION VIEW
CABLE BRACE INSTALLED AT
SINGLE HANGER
(TRANSVERSE BRACES ONLY)

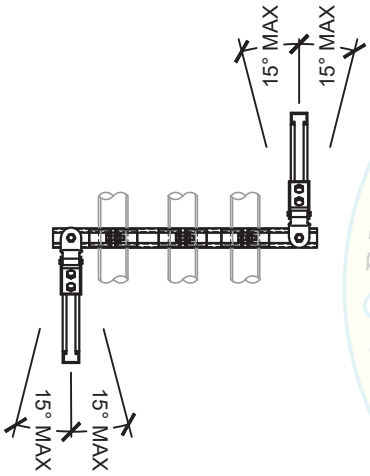

PLAN VIEW
LONGITUDINAL SOLID BRACES INSTALLED
IN ALTERNATING DIRECTIONS

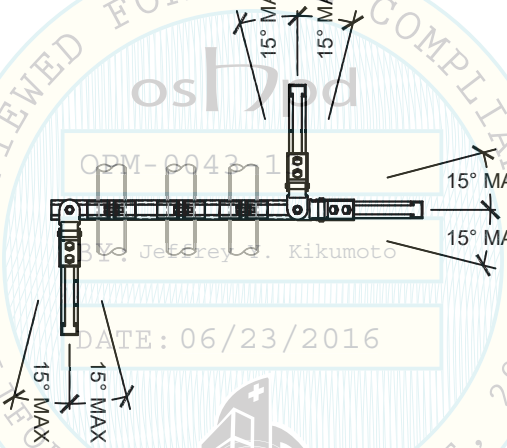

PLAN VIEW
ALL-DIRECTIONAL SOLID BRACES INSTALLED
IN ALTERNATING DIRECTIONS

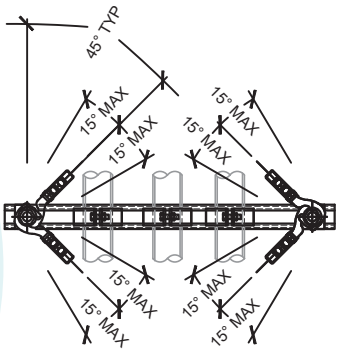

PLAN VIEW
CABLE X-PATTERN BRACE INSTALLED
IN-BETWEEN HANGERS

REVIEWED FOR CODE COMPLIANCE
CALIFORNIA BUILDING CODE, 2013
OSHPD
OPM-0043-13
BY: Jeffrey D. Kikumoto
DATE: 06/23/2016

NOTES:
1) REFER TO APPROPRIATE DETAIL F PAGES FOR DIMENSIONS AND NOTATIONS NOT SHOWN.

MASON WEST, INC.
1601 E. Miraloma Ave. Placentia, CA 92870
TEL (714) 630 - 0701, www.masonwest.com

Jiefu "Jeff" Zhang, SE
California SE No. S5270

PAGE
A25.1

ALTERNATE ARRANGEMENT OF SEISMIC BRACES FOR CONDUITS ON TRAPEZE

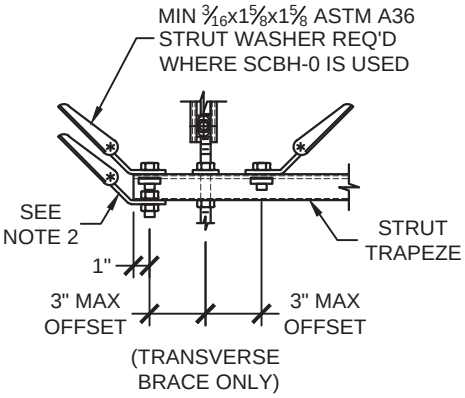

(TRANSVERSE BRACE ONLY)

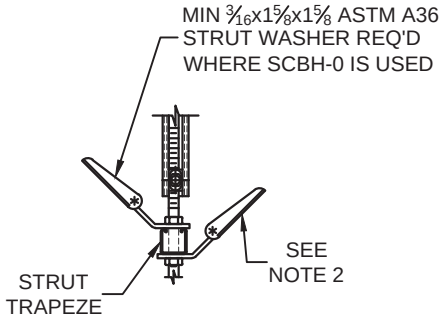

(LONGITUDINAL OR ALL-DIRECTIONAL BRACE)

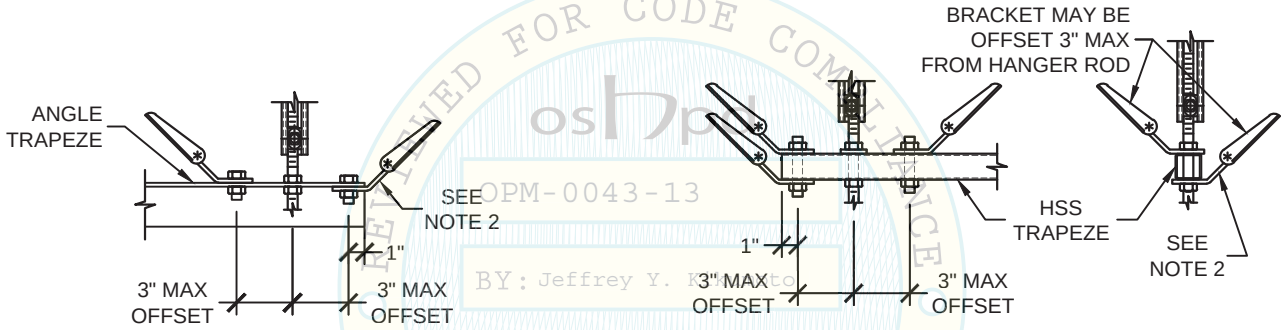

(TRANSVERSE, LONGITUDINAL OR ALL-DIRECTIONAL BRACE)

(TRANSVERSE, LONGITUDINAL OR ALL-DIRECTIONAL BRACE)

SEISMIC BRACE BRACKET OFFSET FROM HANGER RODS

REVIEWED FOR CODE COMPLIANCE
OSHPD
OPM-0043-13
BY: Jeffrey Y. Kikumoto
DATE: 06/23/2016
CALIFORNIA BUILDING CODE, 2013

NOTES:
1) REFER TO APPROPRIATE DETAIL F PAGES FOR DIMENSIONS AND NOTATIONS NOT SHOWN.
2) WHEN INSTALLING SHB TO BOTTOM OF TRAPEZE, MW-KY SHB KEY IS REQ'D (REF. X2.4).

MASON WEST, INC.
1601 E. Miraloma Ave. Placentia, CA 92870
TEL (714) 630 - 0701, www.masonwest.com

Jiefu "Jeff" Zhang, SE
California SE No. S5270

PAGE
A25.2

ATTACHMENT OPTIONS FOR CONDUITS ON TRAPEZE MEMBERS FOR TRANSVERSE, LONGITUDINAL, AND ALL-DIRECTIONAL BRACING SYSTEMS

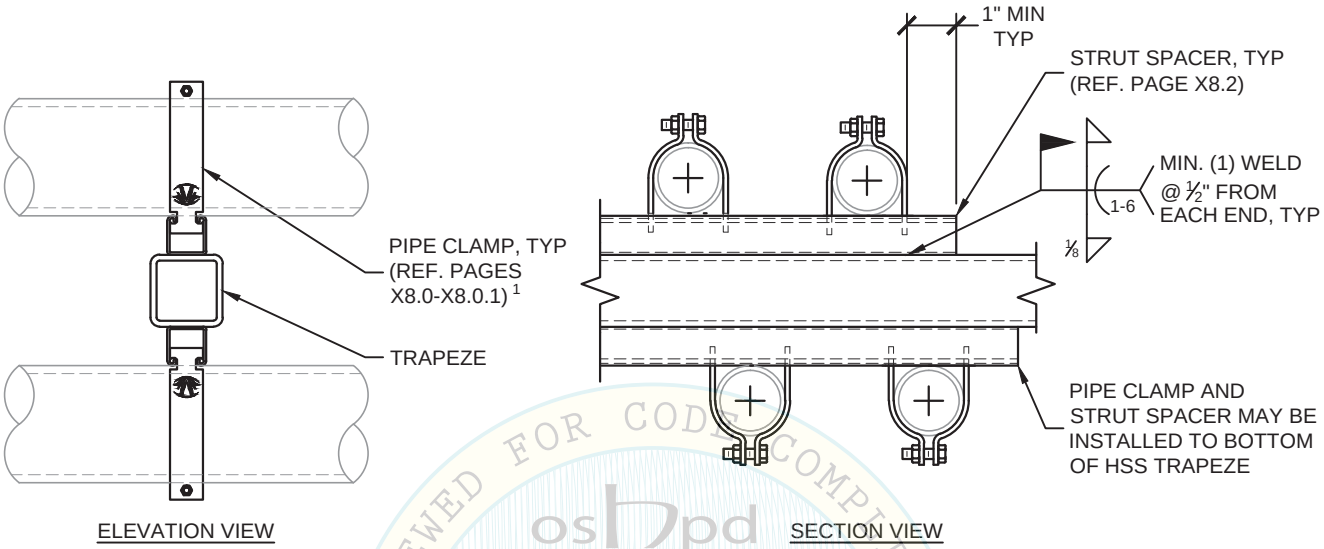

ELEVATION VIEW SECTION VIEW

REVIEWED FOR CODE COMPLIANCE
CALIFORNIA BUILDING CODE, 2013
oshpd
OPM-0043-13
BY: Jeffrey Y. Kikumoto
DATE: 06/23/2016

MASON WEST MW-SSC AND MW-SSCE PIPE CLAMPS

NOTES:

1) PIPE CLAMPS MAY BE USED FOR TRANSVERSE, LONGITUDINAL, OR ALL-DIRECTIONAL BRACING SYSTEMS. REF. APPROPRIATE X8 PAGE FOR MAX Fp FORCES.

MASON WEST, INC.
1601 E. Miraloma Ave. Placentia, CA 92870
TEL (714) 630 - 0701, www.masonwest.com

Jiefu "Jeff" Zhang, SE
California SE No. S5270

PAGE
A26.0

SEISMIC SOLID BRACING OFF STRUT HANGER TRANSVERSE OPTION FOR INDIVIDUALLY SUSPENDED CONDUIT

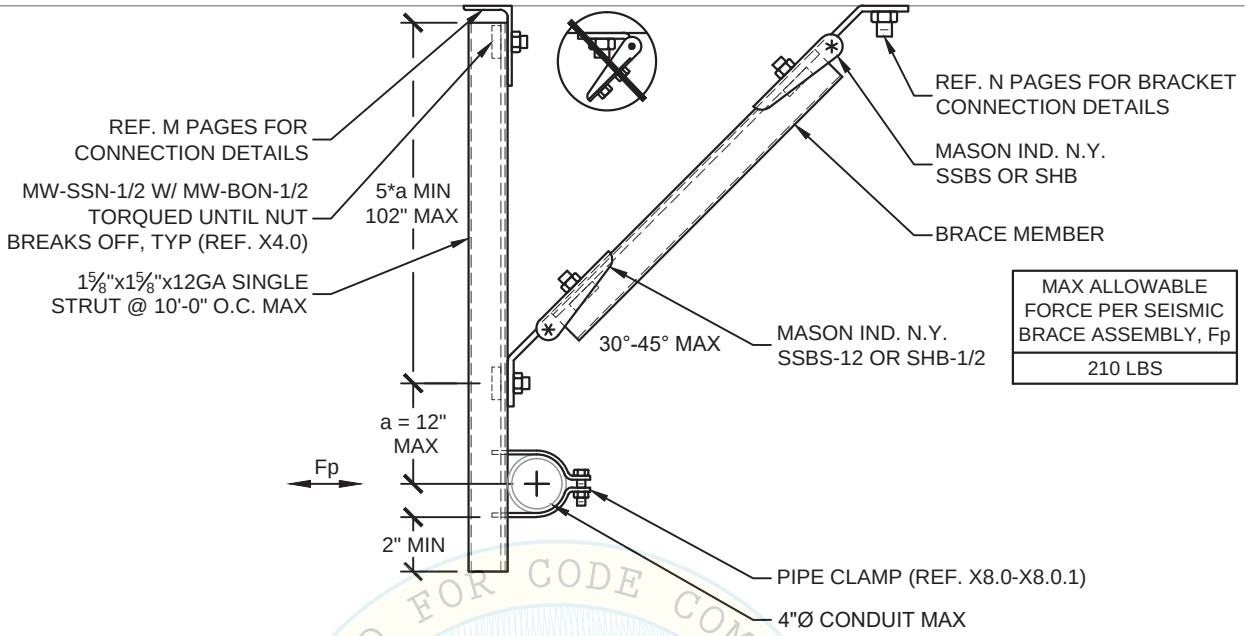

MAX ALLOWABLE FORCE PER SEISMIC BRACE ASSEMBLY, Fp
210 LBS

SINGLE STRUT OPTION

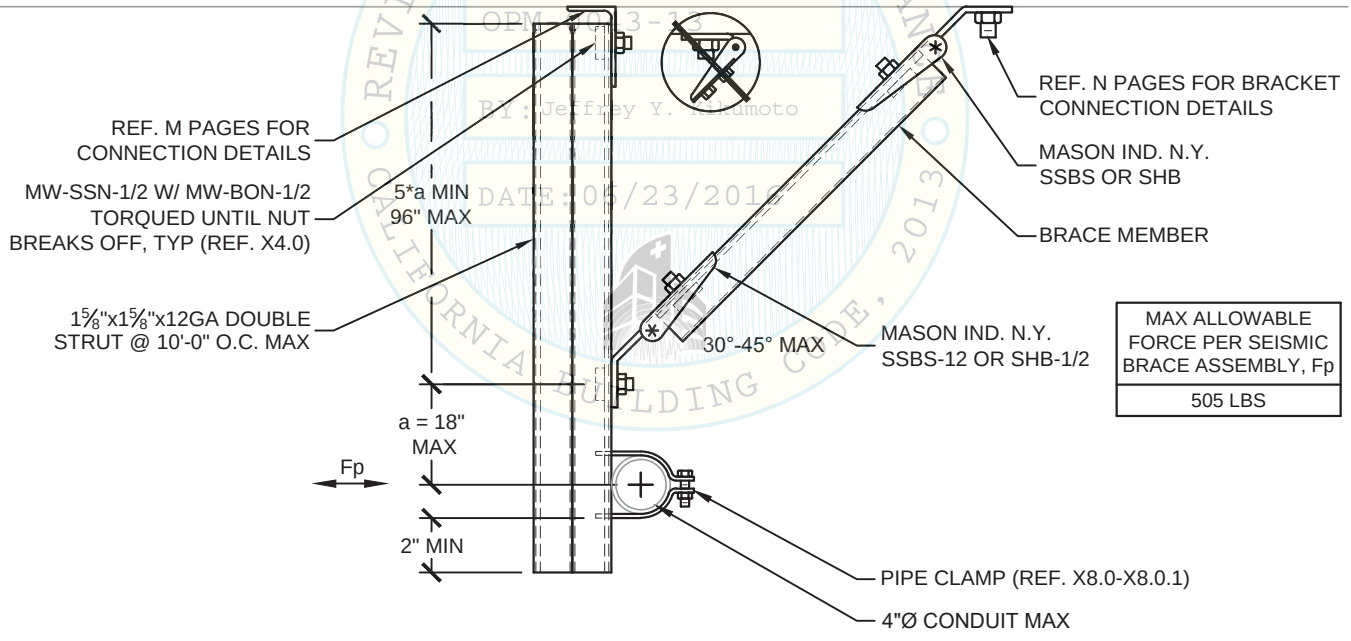

MAX ALLOWABLE FORCE PER SEISMIC BRACE ASSEMBLY, Fp
505 LBS

DOUBLE STRUT OPTION

NOTES:
1) REFER TO APPROPRIATE C PAGES FOR DIMENSIONS AND ANNOTATIONS NOT SHOWN.

MASON WEST, INC.
1601 E. Miraloma Ave. Placentia, CA 92870
TEL (714) 630 - 0701, www.masonwest.com

Jiefu "Jeff" Zhang, SE
California SE No. S5270

PAGE
A27.0

SEISMIC SOLID BRACING OFF STRUT HANGER LONGITUDINAL OPTION FOR INDIVIDUALLY SUSPENDED CONDUIT

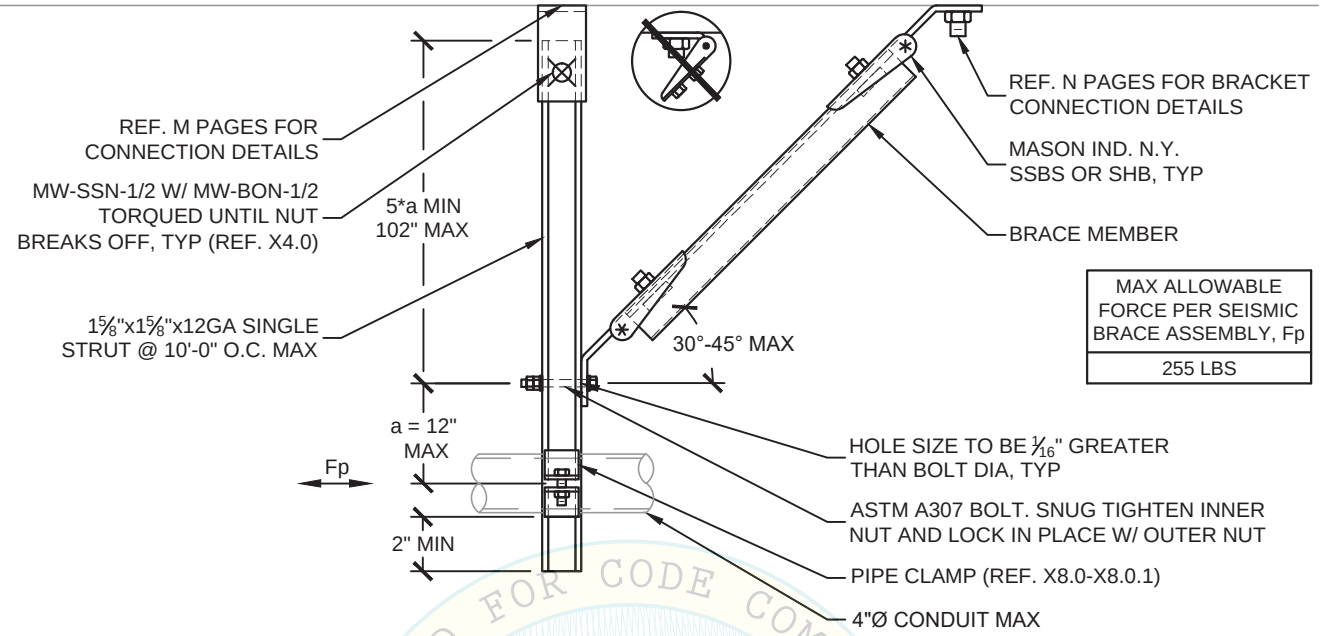

SINGLE STRUT OPTION

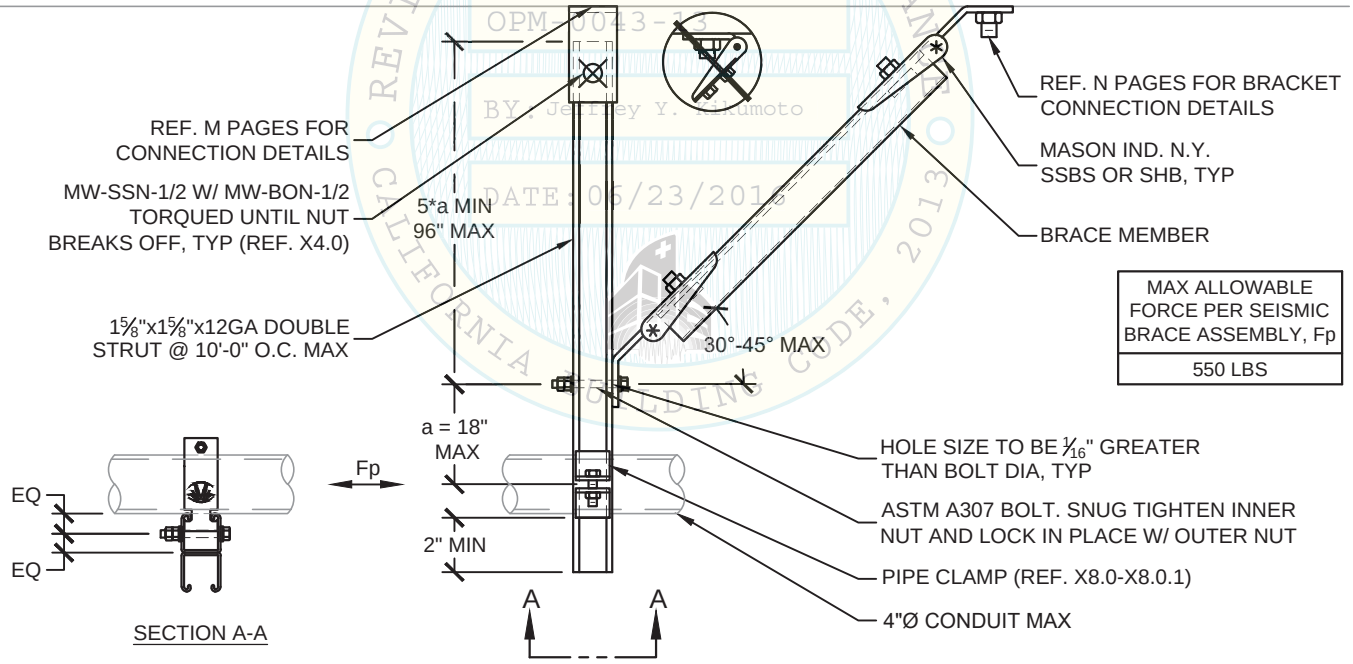

DOUBLE STRUT OPTION

REVIEWED FOR CODE COMPLIANCE TO CALIFORNIA BUILDING CODE, 2013
OPM-0043-13
BY: Jeffrey Y. Kikumoto
DATE: 06/23/2016

NOTES:
1) REFER TO APPROPRIATE C PAGES FOR DIMENSIONS AND ANNOTATIONS NOT SHOWN.

MASON WEST, INC.
1601 E. Miraloma Ave. Placentia, CA 92870
TEL (714) 630 - 0701, www.masonwest.com

Jiefu "Jeff" Zhang, SE
California SE No. S5270

PAGE
A27.1

SEISMIC CABLE BRACING OFF STRUT HANGER TRANVSERSE OPTION FOR INDIVIDUALLY SUSPENDED CONDUIT

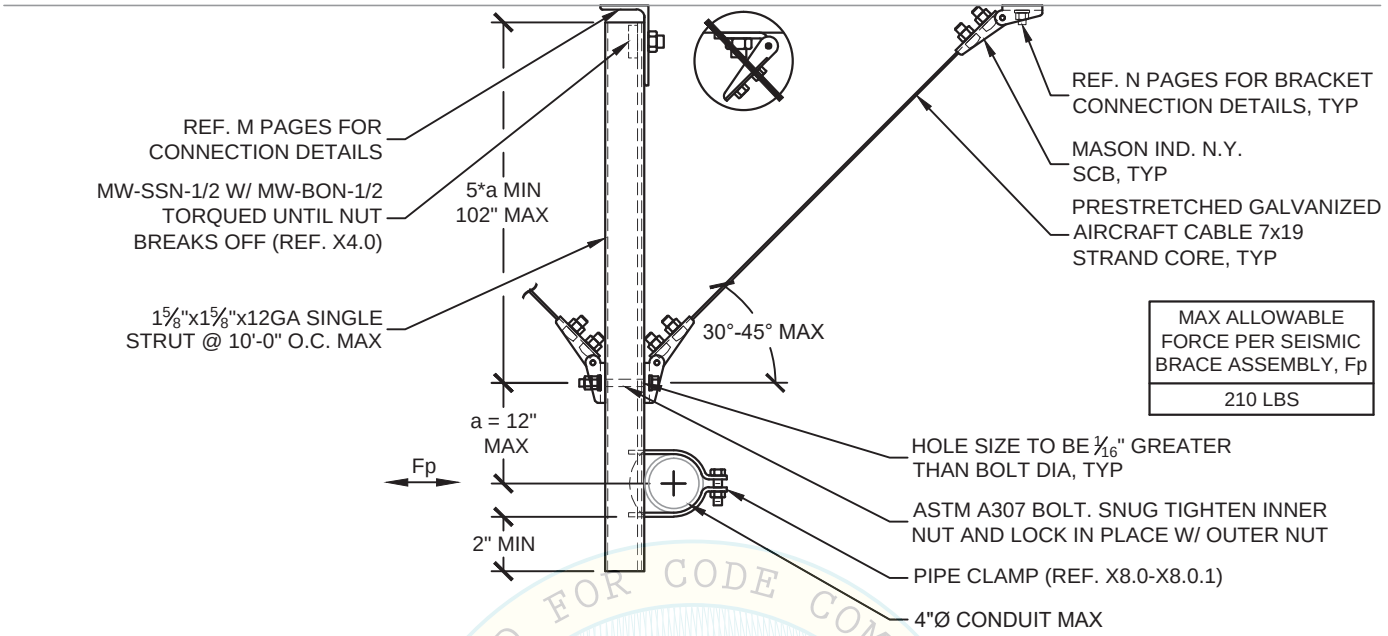

SINGLE STRUT OPTION

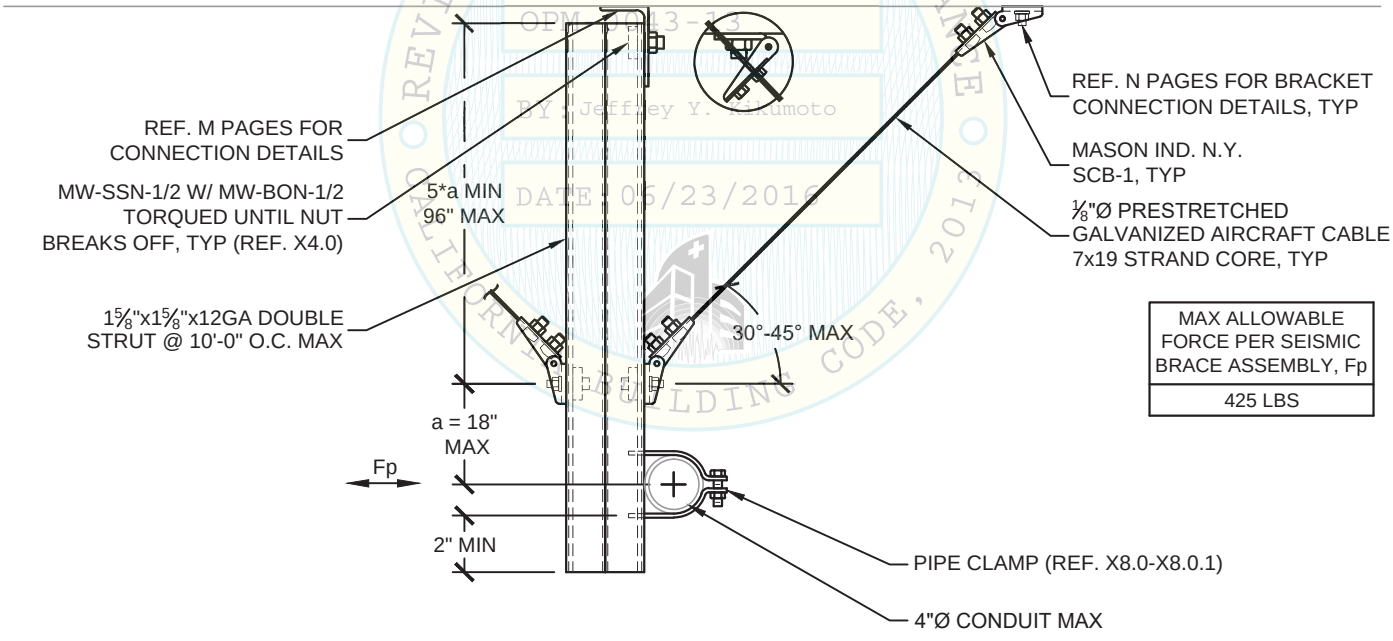

DOUBLE STRUT OPTION

NOTES:
1) REFER TO APPROPRIATE C PAGES FOR DIMENSIONS AND ANNOTATIONS NOT SHOWN.

MASON WEST, INC.
1601 E. Miraloma Ave. Placentia, CA 92870
TEL (714) 630 - 0701, www.masonwest.com

Jiefu "Jeff" Zhang, SE
California SE No. S5270

PAGE
A27.2

SEISMIC CABLE BRACING OFF STRUT HANGER LONGITUDINAL OPTION FOR INDIVIDUALLY SUSPENDED CONDUIT

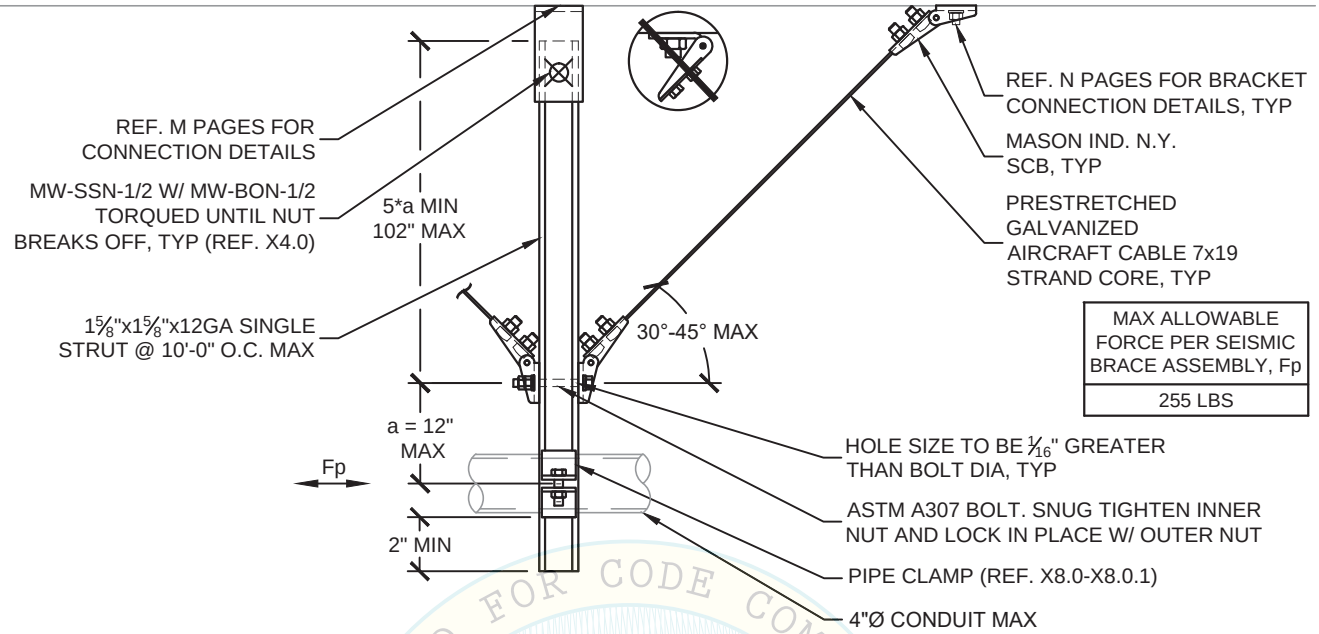

SINGLE STRUT OPTION

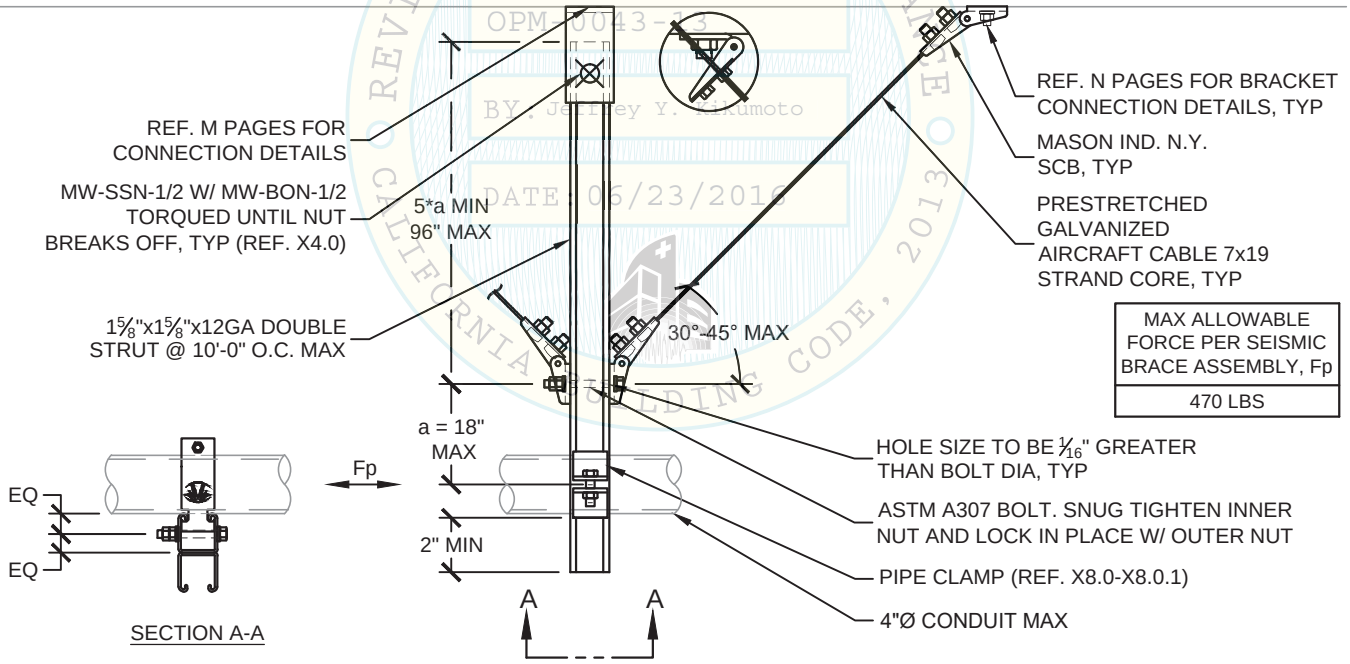

DOUBLE STRUT OPTION

NOTES:
1) REFER TO APPROPRIATE C PAGES FOR DIMENSIONS AND ANNOTATIONS NOT SHOWN.

MASON WEST, INC.
1601 E. Miraloma Ave. Placentia, CA 92870
TEL (714) 630 - 0701, www.masonwest.com

Jiefu "Jeff" Zhang, SE
California SE No. S5270

PAGE
A27.3

OPM-0043-13
BY: Jeffrey Y. Kikumoto
DATE: 06/23/2016
REVIEWED FOR CODE COMPLIANCE TO CALIFORNIA BUILDING CODE, 2013

SEISMIC SOLID BRACING OFF STRUT HANGER TRANSVERSE OPTION FOR SUSPENDED CONDUITS ON TRAPEZE

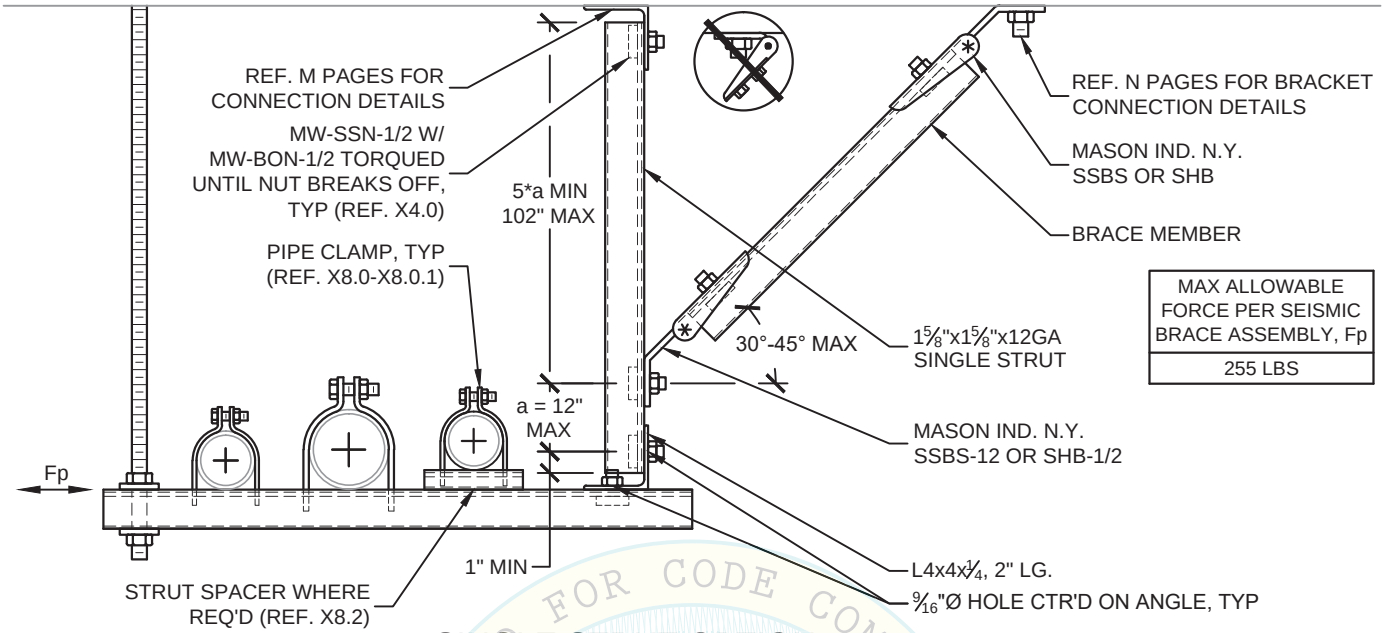

SINGLE STRUT OPTION

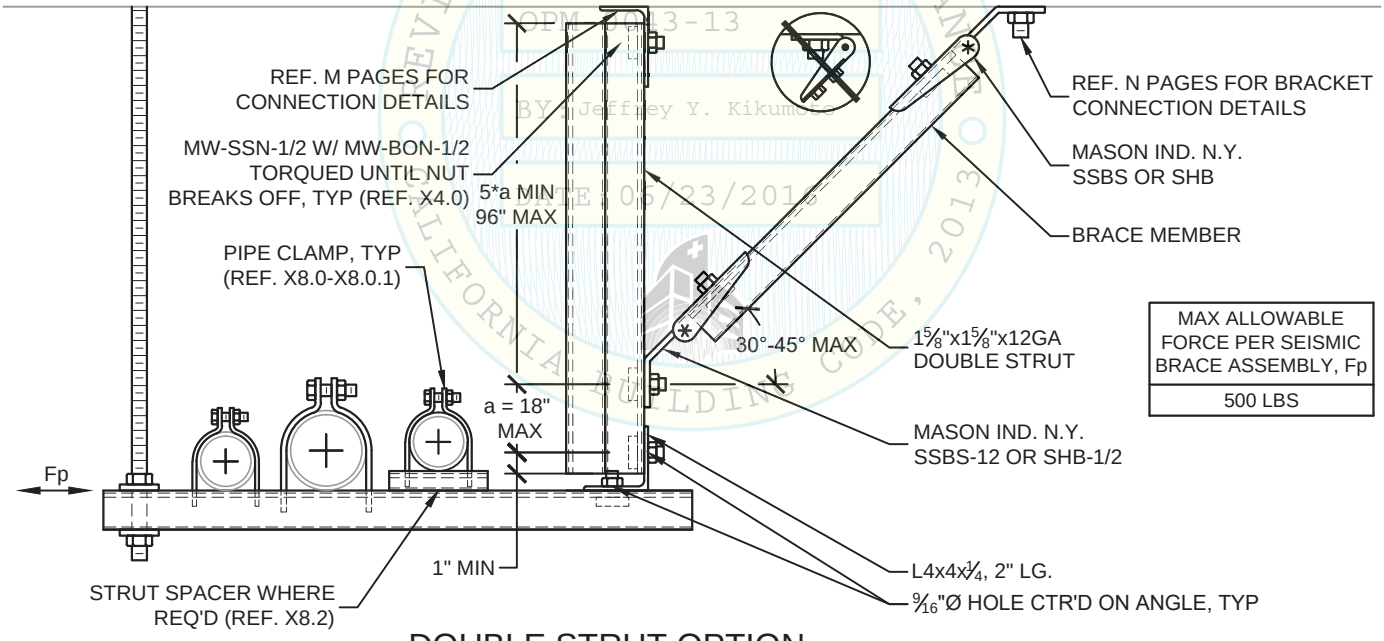

DOUBLE STRUT OPTION

NOTES:
1) REFER TO APPROPRIATE F PAGES FOR DIMENSIONS AND ANNOTATIONS NOT SHOWN.
2) SINGLE STRUT AND DOUBLE STRUT OPTIONS MAY CARRY UP TO A MAXIMUM OF 30LBS/FT OR 60LBS/FT, RESPECTIVELY.

MASON WEST, INC.
1601 E. Miraloma Ave. Placentia, CA 92870
TEL (714) 630 - 0701, www.masonwest.com

Jiefu "Jeff" Zhang, SE
California SE No. S5270

PAGE
A27.4

OPM-0043-13 REVIEWED FOR CODE COMPLIANCE BY Jeffrey Y. Kikumoto DATE 06/23/2016 CALIFORNIA BUILDING CODE, 2013

SEISMIC SOLID BRACING OFF STRUT HANGER LONGITUDINAL OPTION FOR SUSPENDED CONDUITS ON TRAPEZE

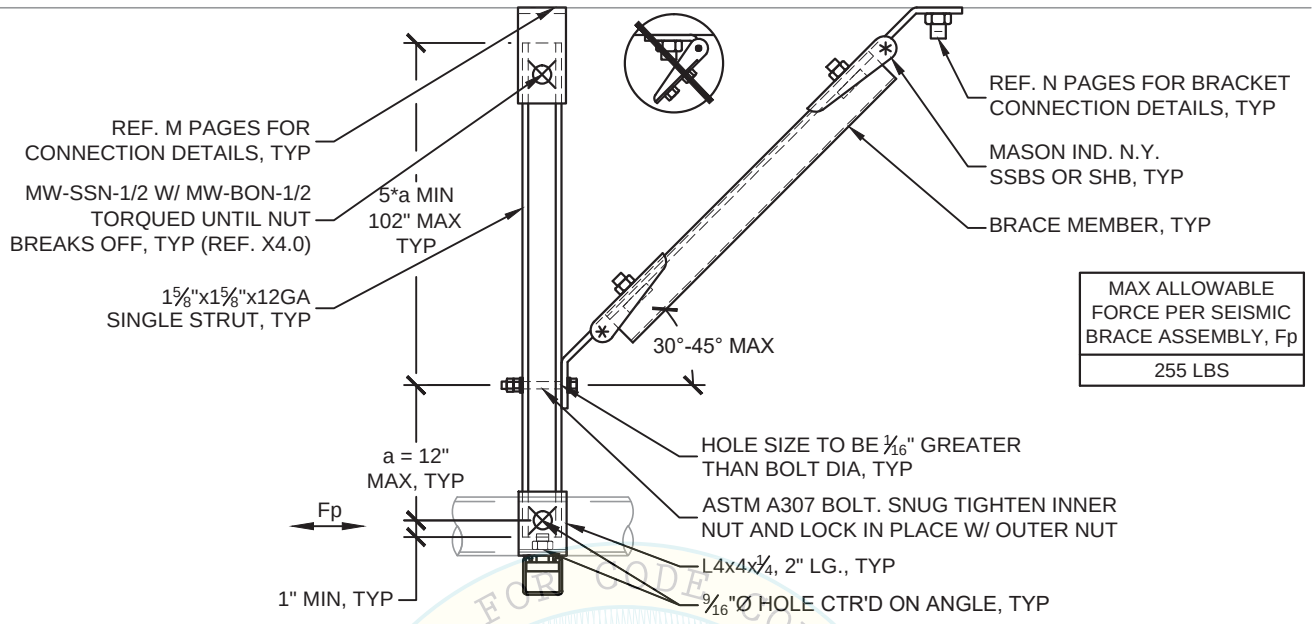

MAX ALLOWABLE FORCE PER SEISMIC BRACE ASSEMBLY, Fp
255 LBS

SINGLE STRUT OPTION

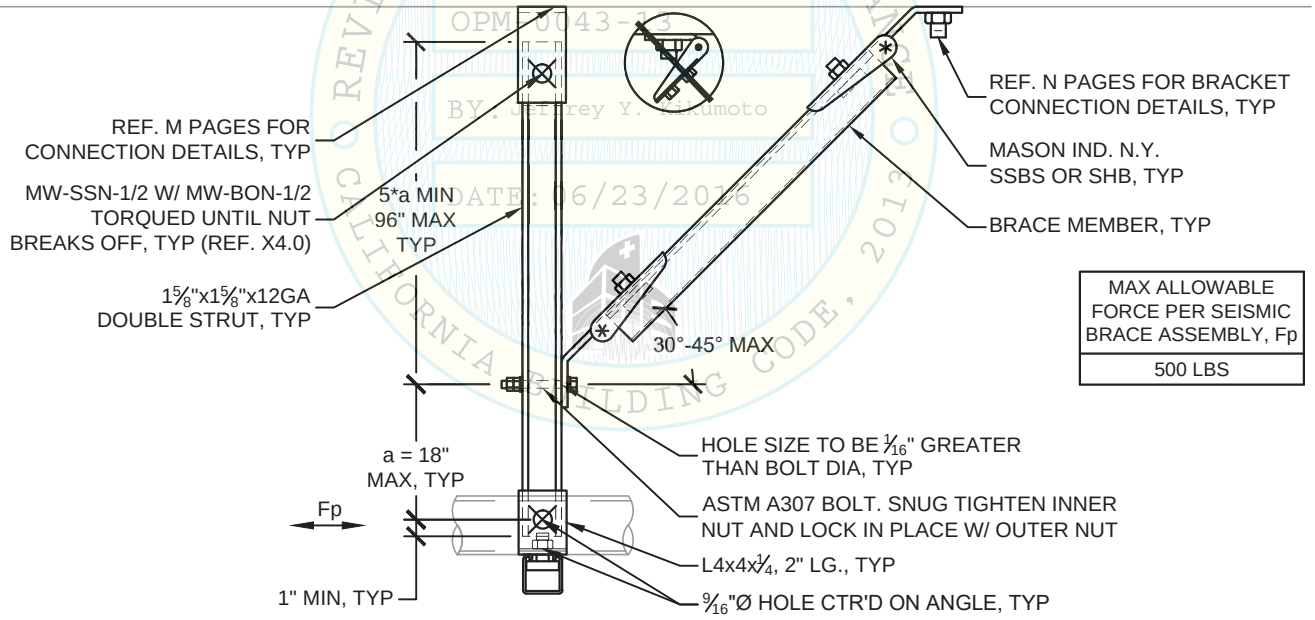

MAX ALLOWABLE FORCE PER SEISMIC BRACE ASSEMBLY, Fp
500 LBS

DOUBLE STRUT OPTION

NOTES:
1) REFER TO APPROPRIATE F PAGES FOR DIMENSIONS AND ANNOTATIONS NOT SHOWN.
2) SINGLE STRUT AND DOUBLE STRUT OPTIONS MAY CARRY UP TO A MAXIMUM OF 30LBS/FT OR 60LBS/FT, RESPECTIVELY.

MASON WEST, INC.
1601 E. Miraloma Ave. Placentia, CA 92870
TEL (714) 630 - 0701, www.masonwest.com

Jiefu "Jeff" Zhang, SE
California SE No. S5270

PAGE
A27.5

OSHPD REVIEWED FOR CODE COMPLIANCE CALIFORNIA BUILDING CODE, 2013
OPM-0043-13
BY: Jeffrey Y. Kikumoto
DATE: 06/23/2016

SEISMIC CABLE BRACING OFF STRUT HANGER TRANSVERSE OPTION FOR SUSPENDED CONDUITS ON TRAPEZE

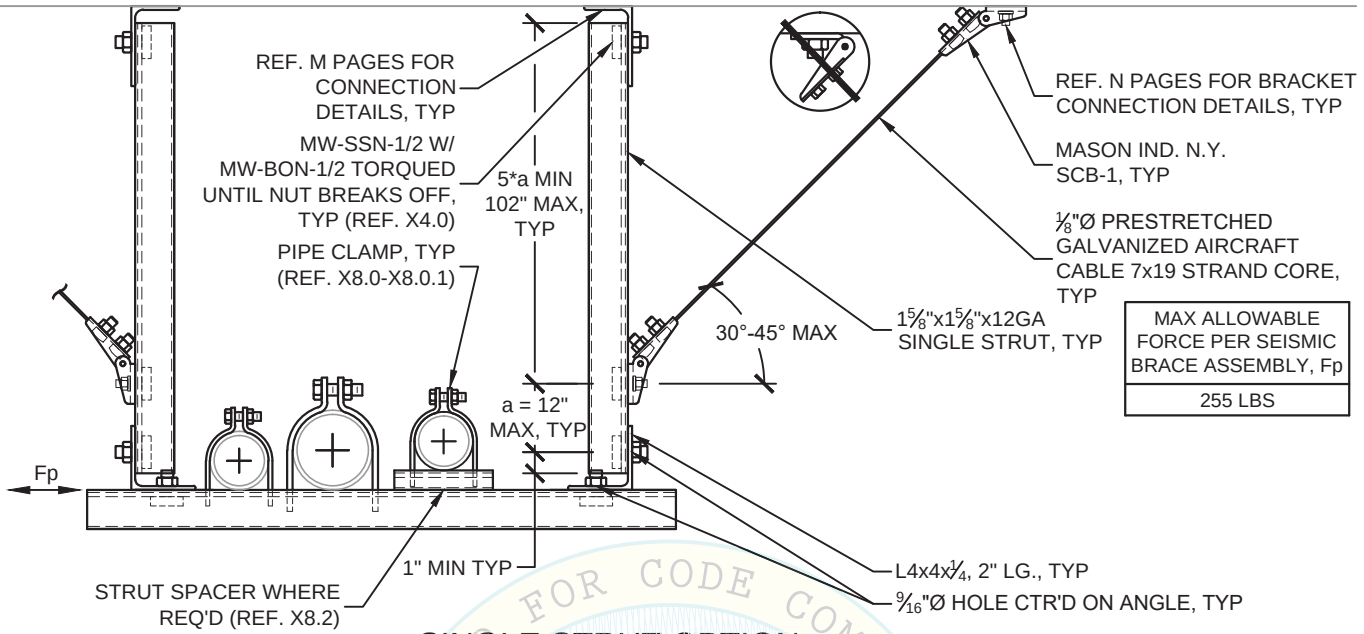

SINGLE STRUT OPTION

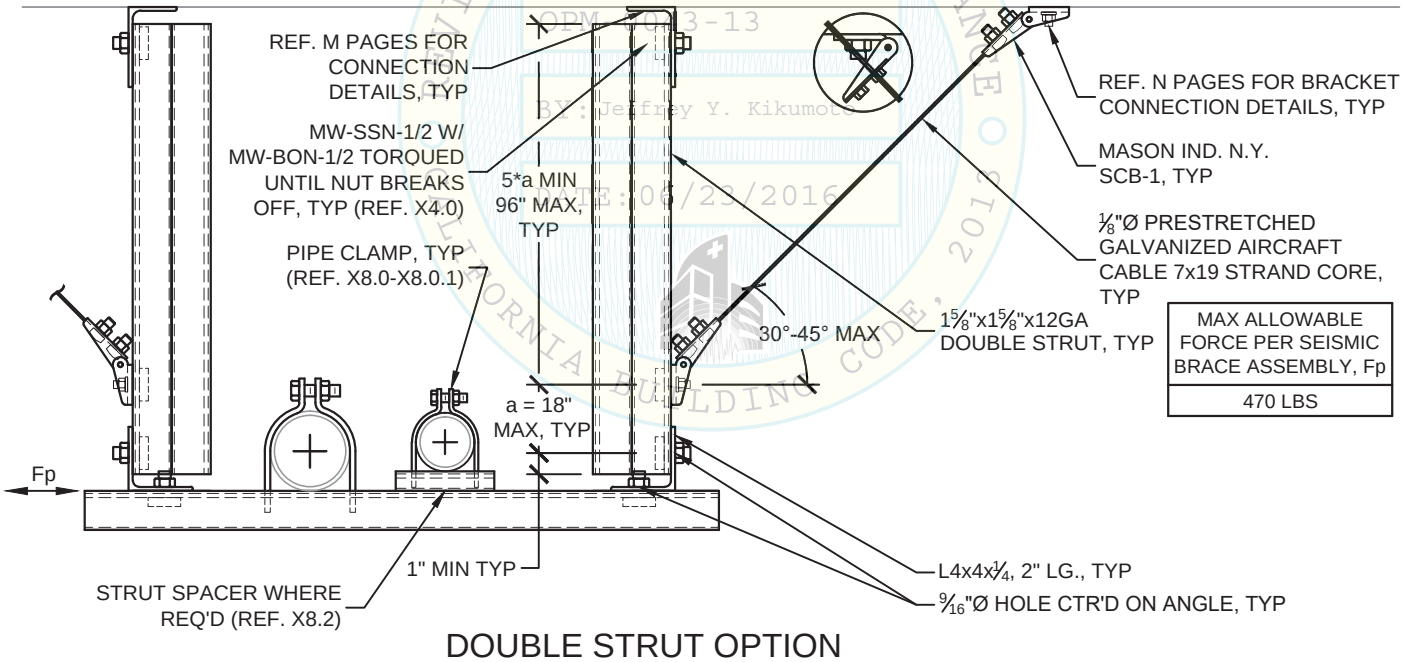

DOUBLE STRUT OPTION

OPM-0043-13
BY: Jeffrey Y. Kikumoto
DATE: 06/23/2016
REVIEWED FOR CODE COMPLIANCE
CALIFORNIA BUILDING CODE, 2013

NOTES:
1) REFER TO APPROPRIATE F PAGES FOR DIMENSIONS AND ANNOTATIONS NOT SHOWN.
2) SINGLE STRUT AND DOUBLE STRUT OPTIONS MAY CARRY UP TO A MAXIMUM OF 30LBS/FT OR 60LBS/FT, RESPECTIVELY.
3) REF. A27.6.1 FOR ALTERNATE INSTALLATION OPTIONS.

MASON WEST, INC.
1601 E. Miraloma Ave. Placentia, CA 92870
TEL (714) 630 - 0701, www.masonwest.com

Jiefu "Jeff" Zhang, SE
California SE No. S5270

PAGE
A27.6

SEISMIC CABLE BRACING OFF STRUT HANGER TRANSVERSE OPTION FOR SUSPENDED CONDUITS ON TRAPEZE

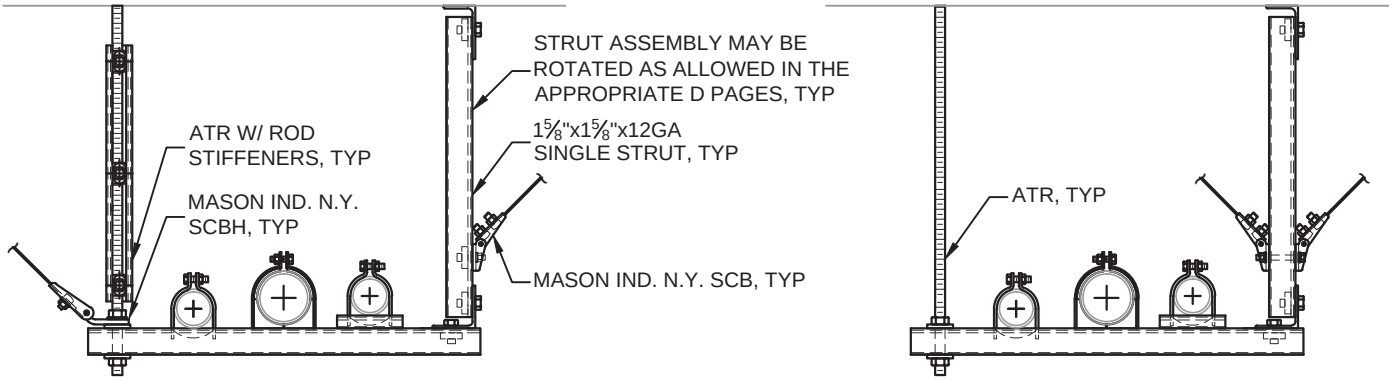

ALTERNATE INSTALLATION FOR SINGLE STRUT OPTION

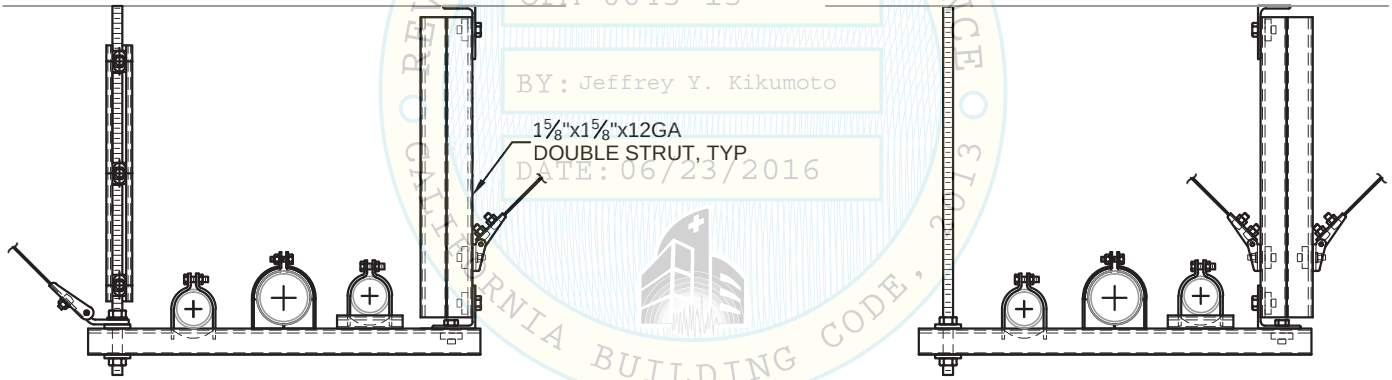

ALTERNATE INSTALLATION FOR DOUBLE STRUT OPTION

REVIEWED FOR CODE COMPLIANCE
CALIFORNIA BUILDING CODE, 2013
oshpd
OPM-0043-13
BY: Jeffrey Y. Kikumoto
DATE: 06/23/2016

NOTES:
1) REFER TO A27.6 AND APPROPRIATE F PAGES FOR DIMENSIONS AND ANNOTATIONS NOT SHOWN.

MASON WEST, INC.
1601 E. Miraloma Ave. Placentia, CA 92870
TEL (714) 630 - 0701, www.masonwest.com

Jiefu "Jeff" Zhang, SE
California SE No. S5270

PAGE
A27.6.1

SEISMIC CABLE BRACING OFF STRUT HANGER LONGITUDINAL OPTION FOR SUSPENDED CONDUITS ON TRAPEZE

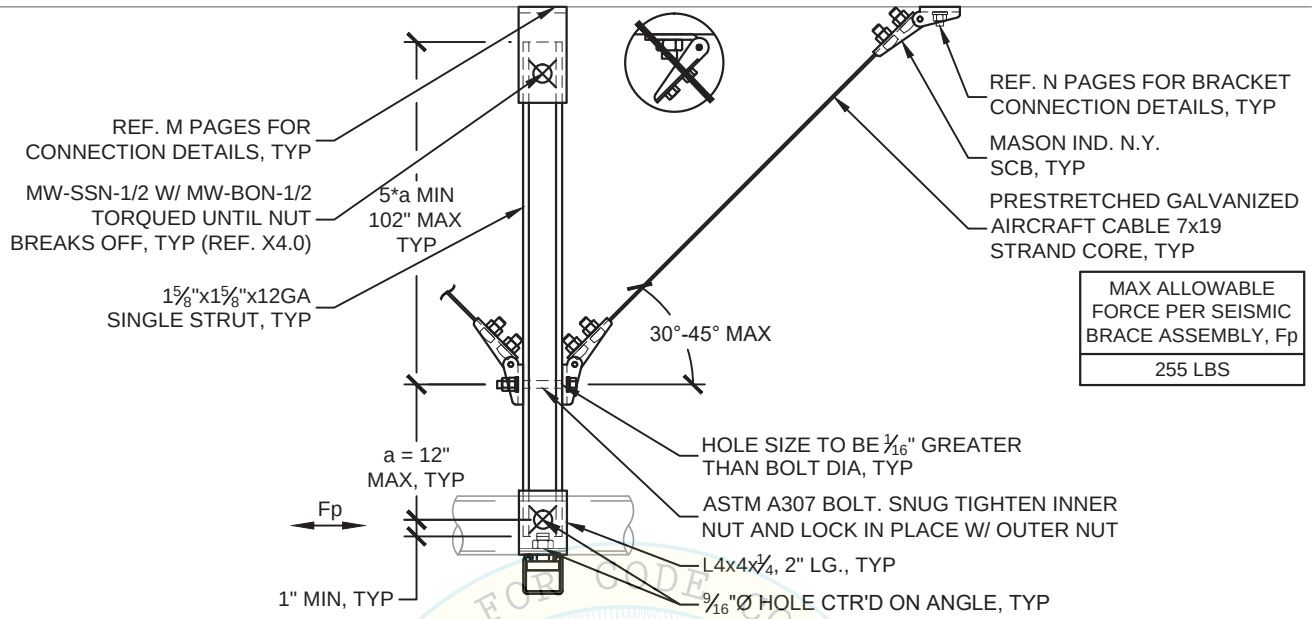

MAX ALLOWABLE FORCE PER SEISMIC BRACE ASSEMBLY, Fp
255 LBS

SINGLE STRUT OPTION

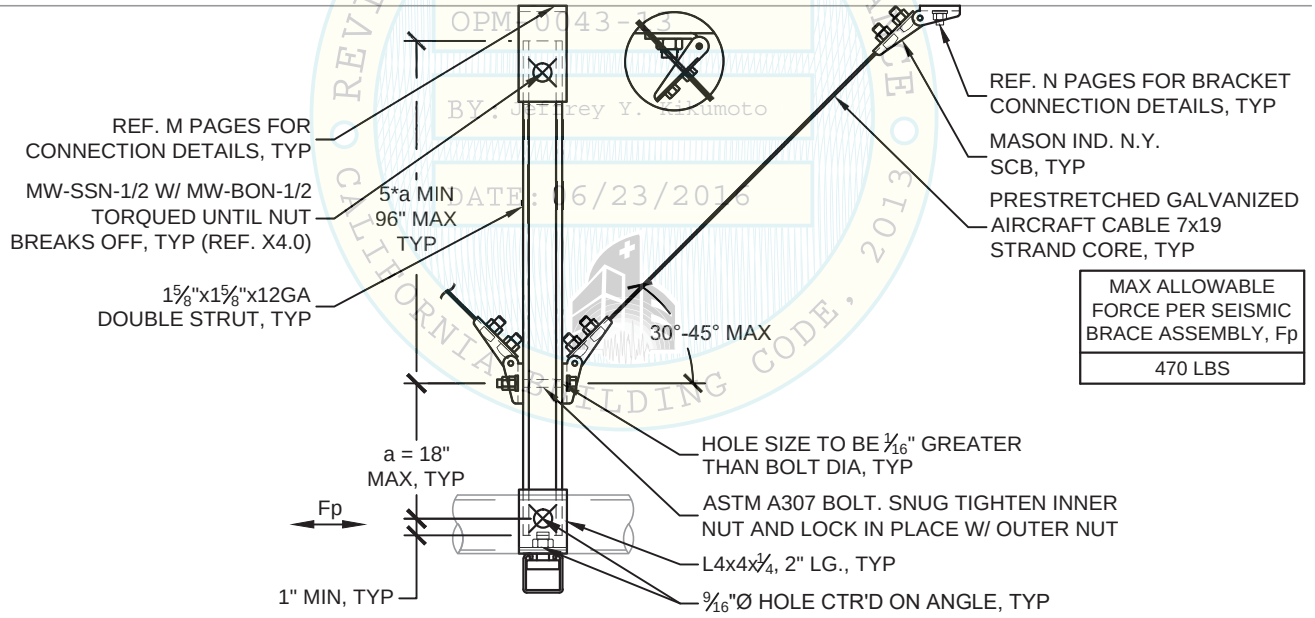

MAX ALLOWABLE FORCE PER SEISMIC BRACE ASSEMBLY, Fp
470 LBS

DOUBLE STRUT OPTION

NOTES:
1) REFER TO APPROPRIATE F PAGES FOR DIMENSIONS AND ANNOTATIONS NOT SHOWN.
2) SINGLE STRUT AND DOUBLE STRUT OPTIONS MAY CARRY UP TO A MAXIMUM OF 30LBS/FT OR 60LBS/FT, RESPECTIVELY.

MASON WEST, INC.
1601 E. Miraloma Ave. Placentia, CA 92870
TEL (714) 630 - 0701, www.masonwest.com

Jiefu "Jeff" Zhang, SE
California SE No. S5270

PAGE
A27.7

OSHPD REVIEWED FOR CODE COMPLIANCE TO CALIFORNIA BUILDING CODE, 2013
OPM-0043-13
BY: Jeffrey Y. Kikumoto
DATE: 06/23/2016

SEISMIC SOLID BRACING OFF STRUT HANGER TRANSVERSE OPTION FOR SUSPENDED RACEWAYS ON TRAPEZE

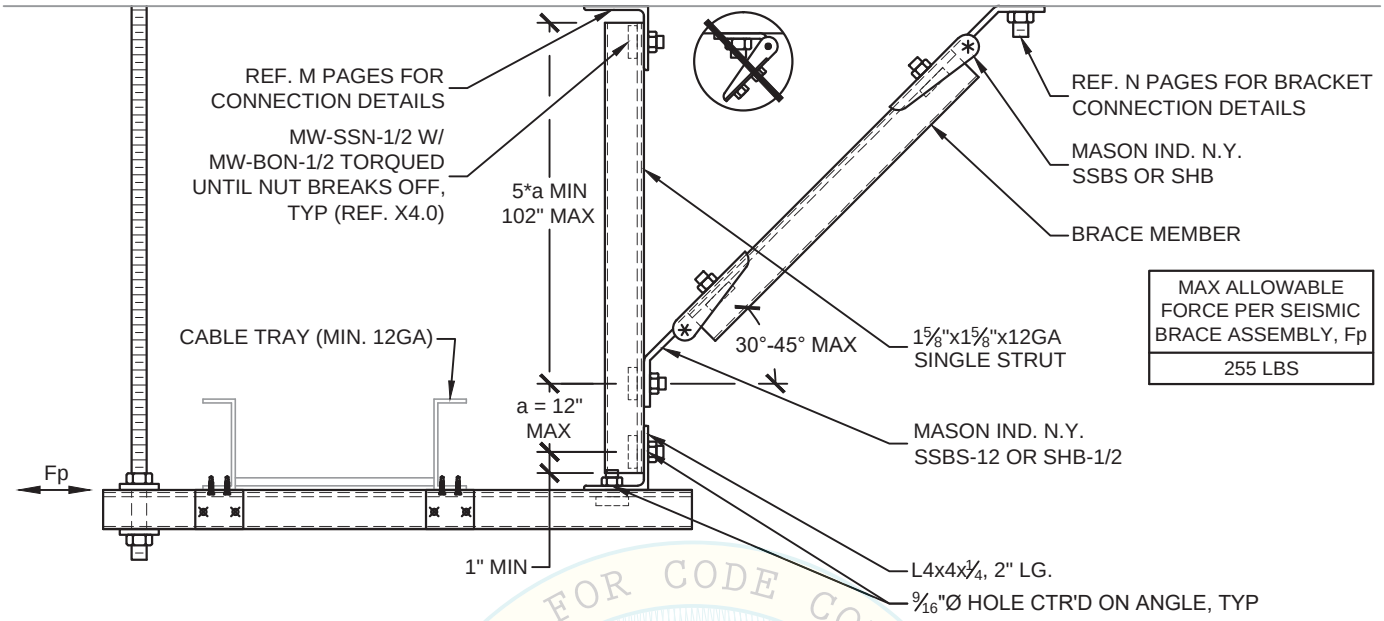

SINGLE STRUT OPTION

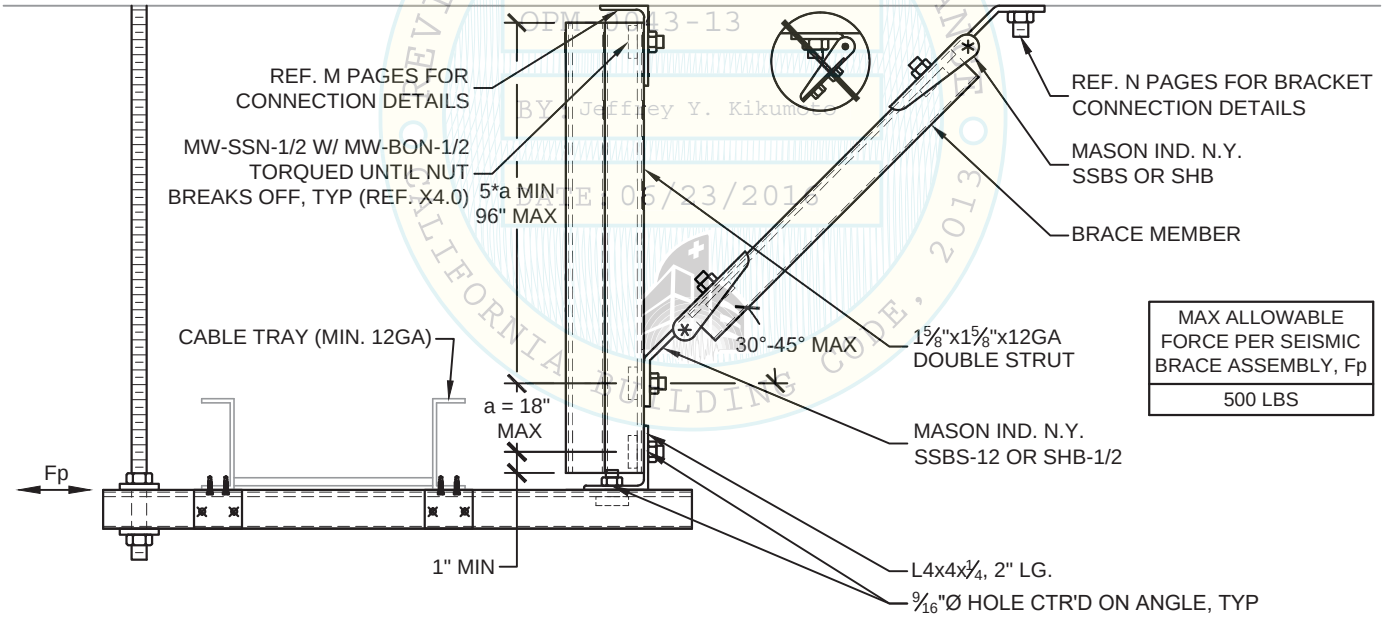

DOUBLE STRUT OPTION

NOTES:

1) REFER TO APPROPRIATE E PAGES FOR DIMENSIONS AND ANNOTATIONS NOT SHOWN.
2) SINGLE STRUT AND DOUBLE STRUT OPTIONS MAY CARRY UP TO A MAXIMUM OF 30LBS/FT OR 60LBS/FT, RESPECTIVELY.
3) CABLE TRAY SHALL BE APPROVED ON A PROJECT SPECIFIC BASIS OR PREAPPROVED BY OSHPD. SPACING LIMITS SET BY THE MANUFACTURER SHALL NOT BE EXCEEDED. CABLE TRAY BRACE SPACING SHALL BE APPROVED OR PREAPPROVED BY OSHPD.

MASON WEST, INC.
1601 E. Miraloma Ave. Placentia, CA 92870
TEL (714) 630 - 0701, www.masonwest.com

Jiefu "Jeff" Zhang, SE
California SE No. S5270

PAGE
A27.8

OPM-0043-13 REVIEWED FOR CODE COMPLIANCE BY Jeffrey Y. Kikumoto DATE 06/23/2016 OSHPD CALIFORNIA BUILDING CODE, 2013

SEISMIC SOLID BRACING OFF STRUT HANGER LONGITUDINAL OPTION FOR SUSPENDED RACEWAYS ON TRAPEZE

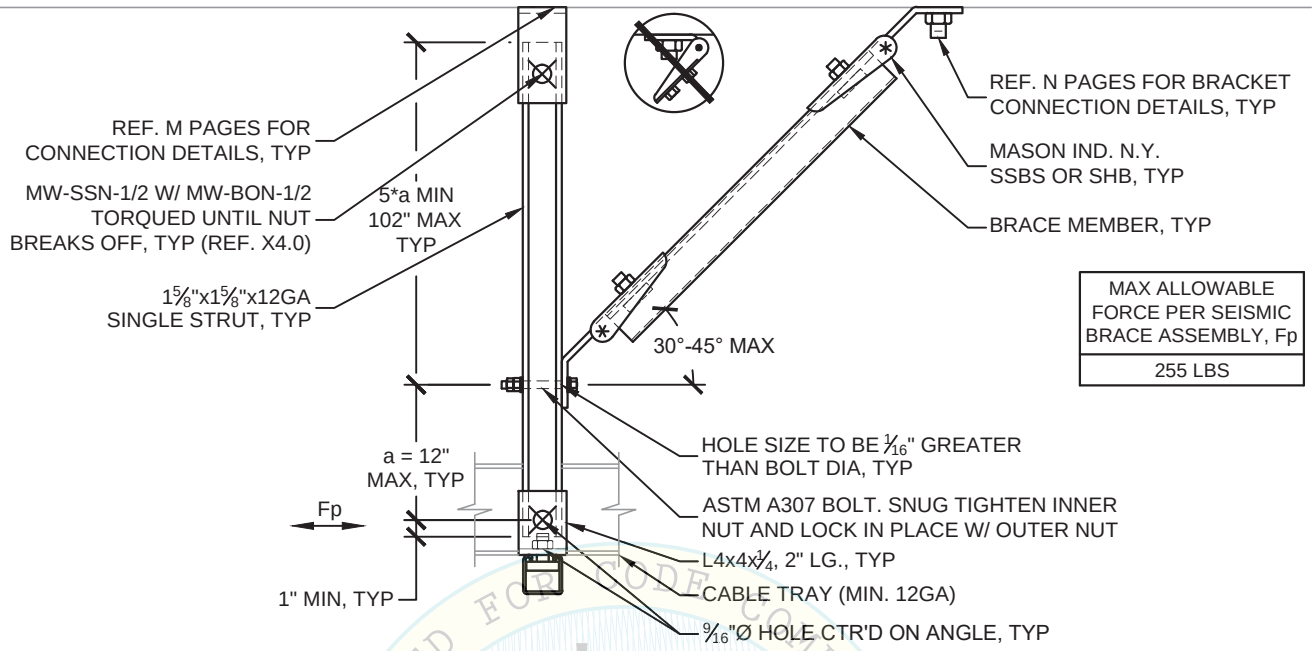

MAX ALLOWABLE FORCE PER SEISMIC BRACE ASSEMBLY, Fp
255 LBS

SINGLE STRUT OPTION

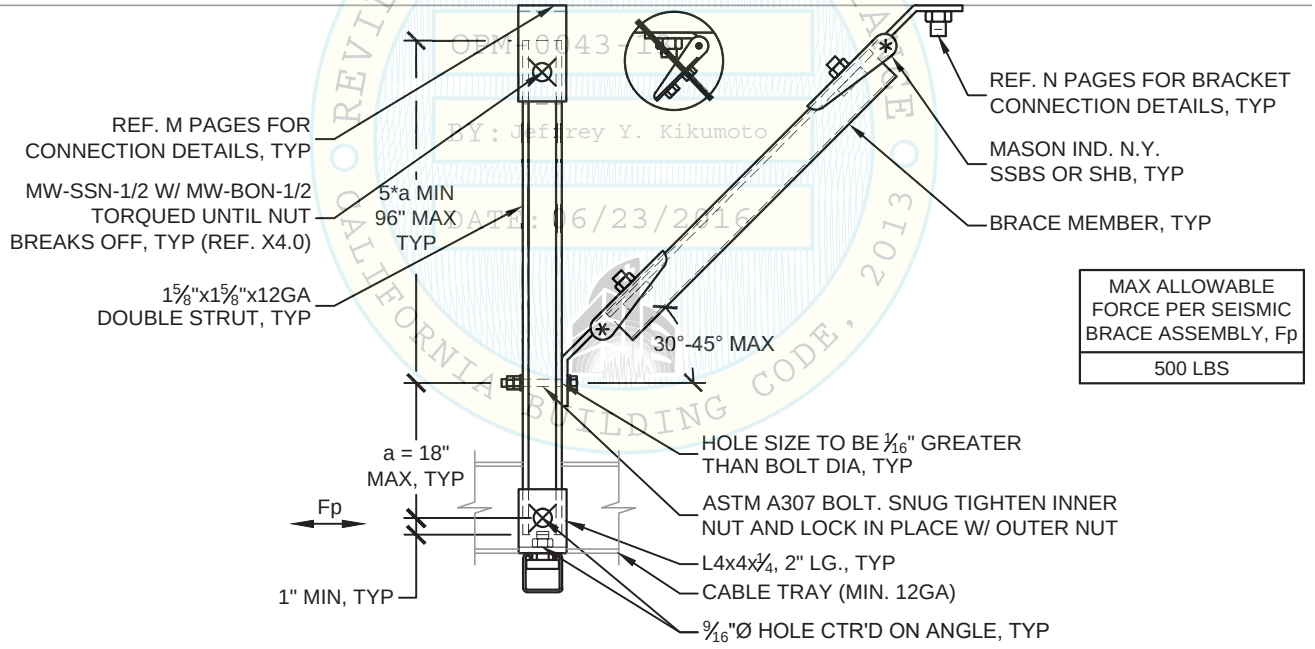

MAX ALLOWABLE FORCE PER SEISMIC BRACE ASSEMBLY, Fp
500 LBS

DOUBLE STRUT OPTION

OSHPD
OPM-0043-13
BY: Jeffrey Y. Kikumoto
DATE: 06/23/2016
REVIEWED FOR CODE COMPLIANCE
CALIFORNIA BUILDING CODE, 2013

NOTES:

1) REFER TO APPROPRIATE E PAGES FOR DIMENSIONS AND ANNOTATIONS NOT SHOWN.
2) SINGLE STRUT AND DOUBLE STRUT OPTIONS MAY CARRY UP TO A MAXIMUM OF 30LBS/FT OR 60LBS/FT, RESPECTIVELY.
3) CABLE TRAY SHALL BE APPROVED ON A PROJECT SPECIFIC BASIS OR PREAPPROVED BY OSHPD. SPACING LIMITS SET BY THE MANUFACTURER SHALL NOT BE EXCEEDED. CABLE TRAY BRACE SPACING SHALL BE APPROVED OR PREAPPROVED BY OSHPD.

MASON WEST, INC.
1601 E. Miraloma Ave. Placentia, CA 92870
TEL (714) 630 - 0701, www.masonwest.com

Jiefu "Jeff" Zhang, SE
California SE No. S5270

PAGE
A27.9

SEISMIC CABLE BRACING OFF STRUT HANGER TRANSVERSE OPTION FOR SUSPENDED RACEWAYS ON TRAPEZE

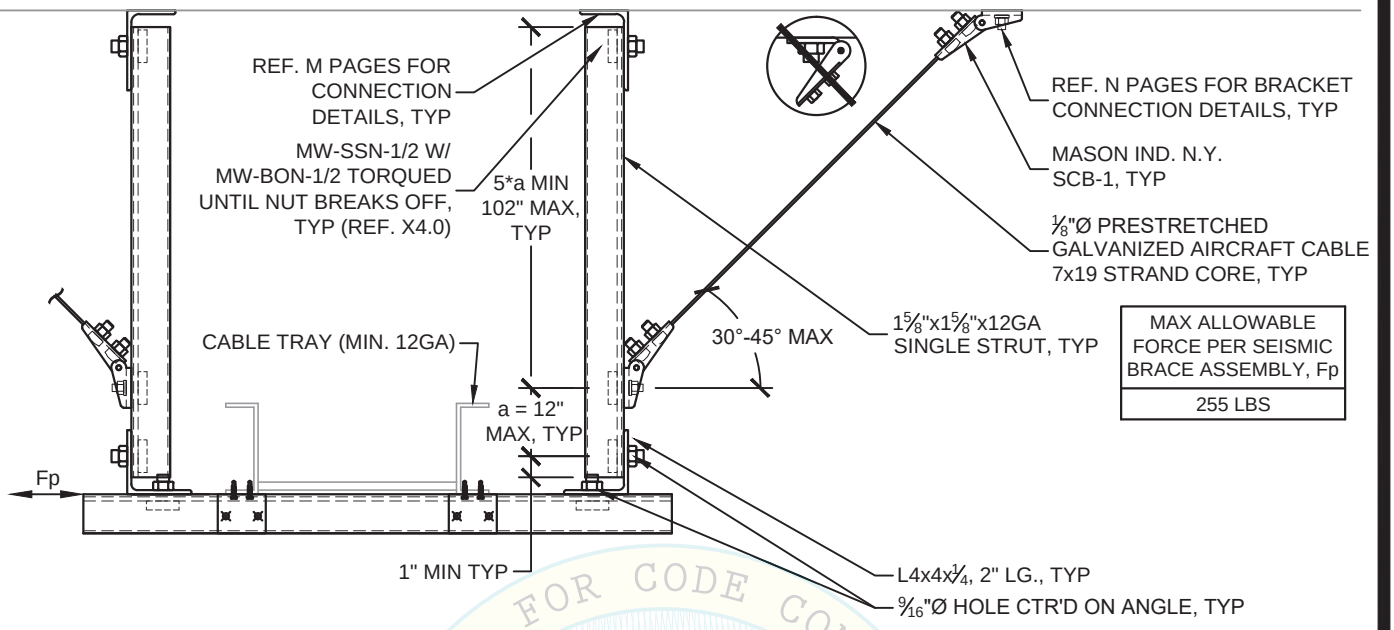

MAX ALLOWABLE FORCE PER SEISMIC BRACE ASSEMBLY, Fp
255 LBS

SINGLE STRUT OPTION

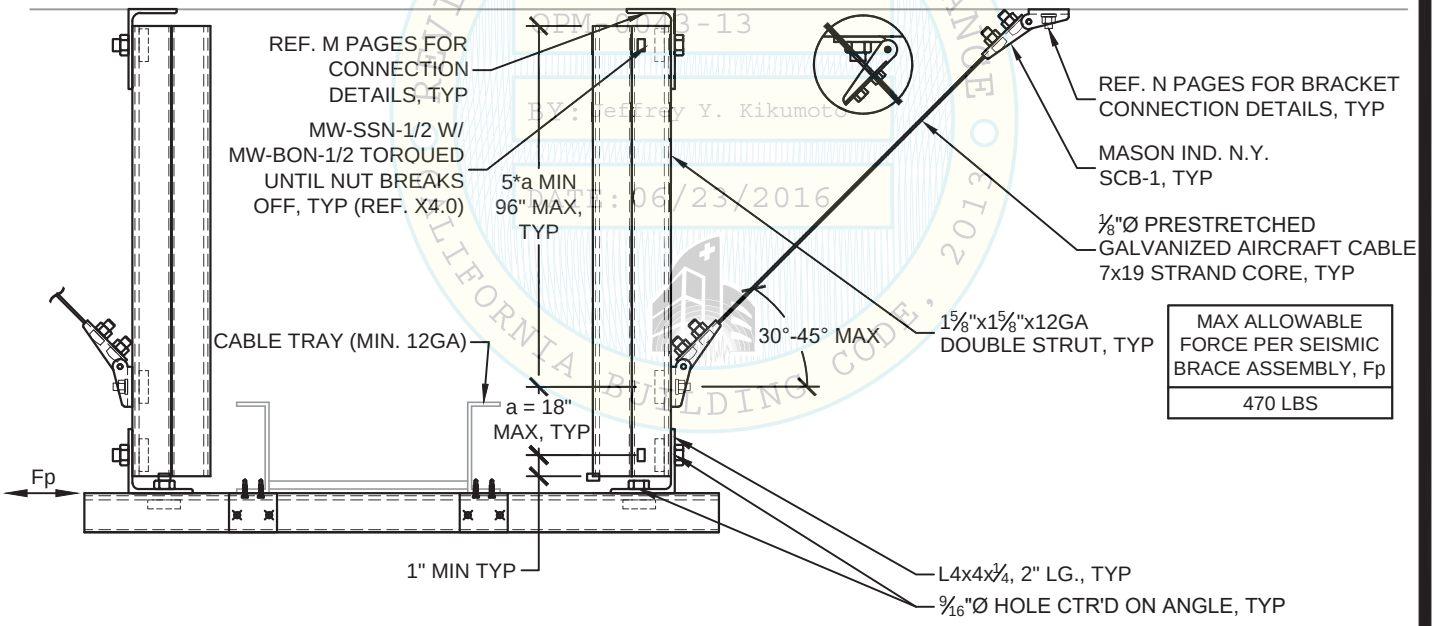

MAX ALLOWABLE FORCE PER SEISMIC BRACE ASSEMBLY, Fp
470 LBS

DOUBLE STRUT OPTION

NOTES:

1) REFER TO APPROPRIATE E PAGES FOR DIMENSIONS AND ANNOTATIONS NOT SHOWN.
2) SINGLE STRUT AND DOUBLE STRUT OPTIONS MAY CARRY UP TO A MAXIMUM OF 30LBS/FT OR 60LBS/FT, RESPECTIVELY.
3) CABLE TRAY SHALL BE APPROVED ON A PROJECT SPECIFIC BASIS OR PREAPPROVED BY OSHPD. SPACING LIMITS SET BY THE MANUFACTURER SHALL NOT BE EXCEEDED. CABLE TRAY BRACE SPACING SHALL BE APPROVED OR PREAPPROVED BY OSHPD.

MASON WEST, INC.
1601 E. Miraloma Ave. Placentia, CA 92870
TEL (714) 630 - 0701, www.masonwest.com

Jiefu "Jeff" Zhang, SE
California SE No. S5270

PAGE
A27.10

REVIEWED FOR CODE COMPLIANCE CALIFORNIA BUILDING CODE, 2013
OPM-0043-13
BY: Jeffrey Y. Kikumoto
DATE: 06/23/2016

SEISMIC CABLE BRACING OFF STRUT HANGER TRANSVERSE OPTION FOR SUSPENDED RACEWAYS ON TRAPEZE

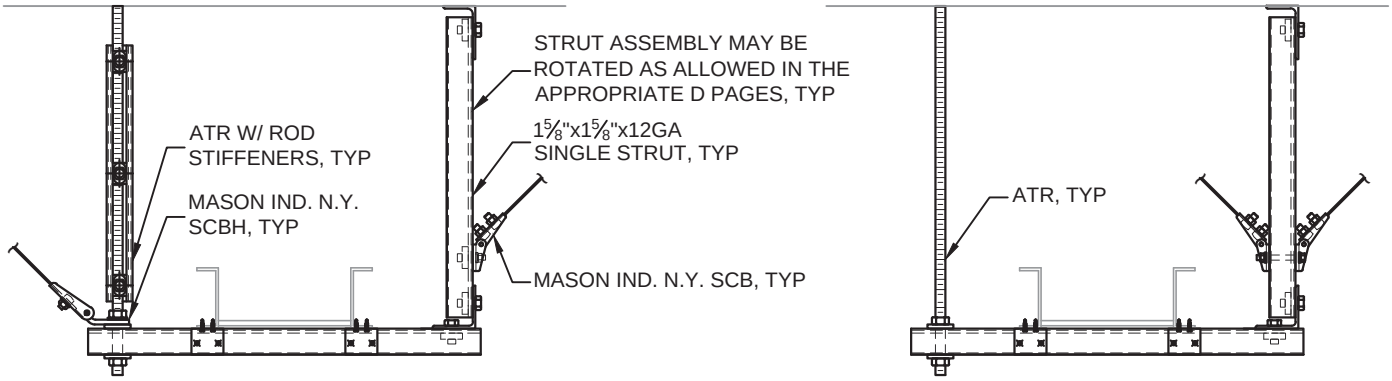

ALTERNATE INSTALLATION FOR SINGLE STRUT OPTION

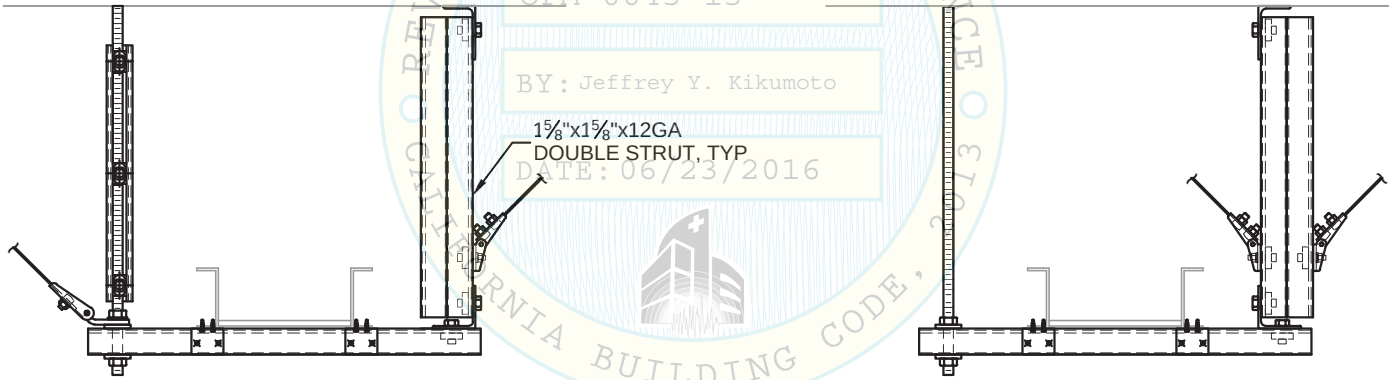

ALTERNATE INSTALLATION FOR DOUBLE STRUT OPTION

REVIEWED FOR CODE COMPLIANCE
OSHPD
OPM-0043-13
BY: Jeffrey Y. Kikumoto
DATE: 06/23/2016
CALIFORNIA BUILDING CODE, 2013

NOTES:
1) REFER TO A27.10 AND APPROPRIATE E PAGES FOR DIMENSIONS AND ANNOTATIONS NOT SHOWN.

MASON WEST, INC.
1601 E. Miraloma Ave. Placentia, CA 92870
TEL (714) 630 - 0701, www.masonwest.com

Jiefu "Jeff" Zhang, SE
California SE No. S5270

PAGE
A27.10.1

SEISMIC CABLE BRACING OFF STRUT HANGER LONGITUDINAL OPTION FOR SUSPENDED RACEWAYS ON TRAPEZE

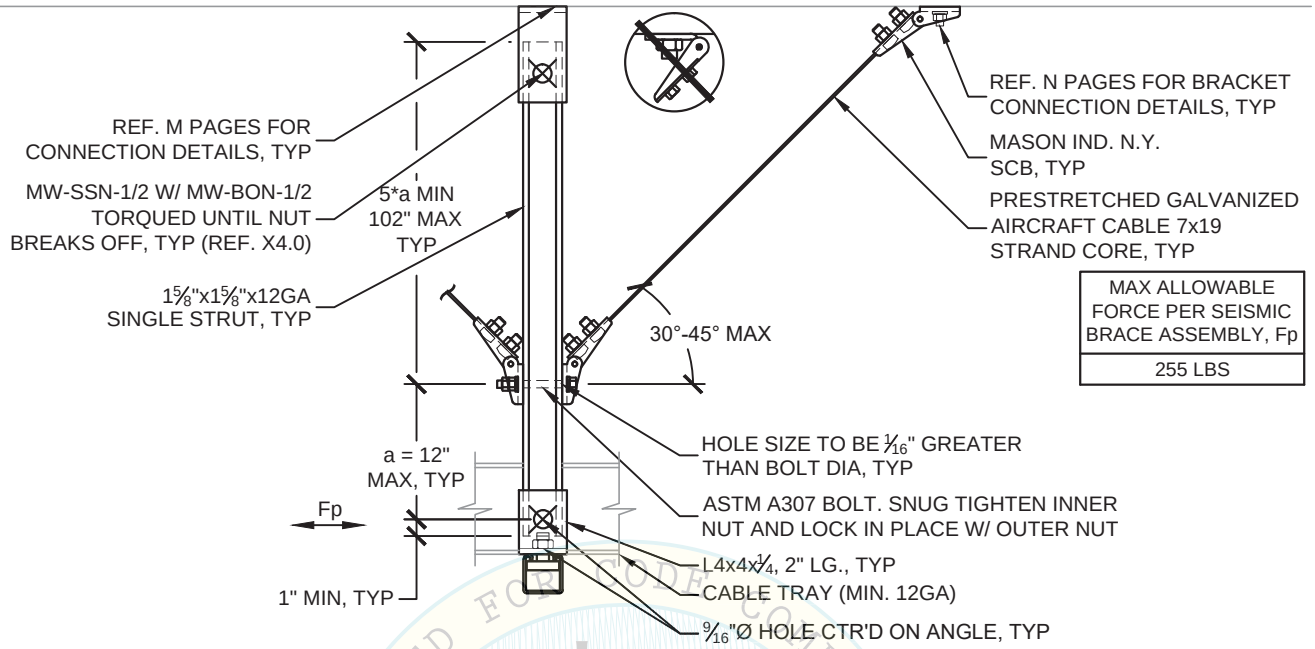

MAX ALLOWABLE FORCE PER SEISMIC BRACE ASSEMBLY, Fp
255 LBS

SINGLE STRUT OPTION

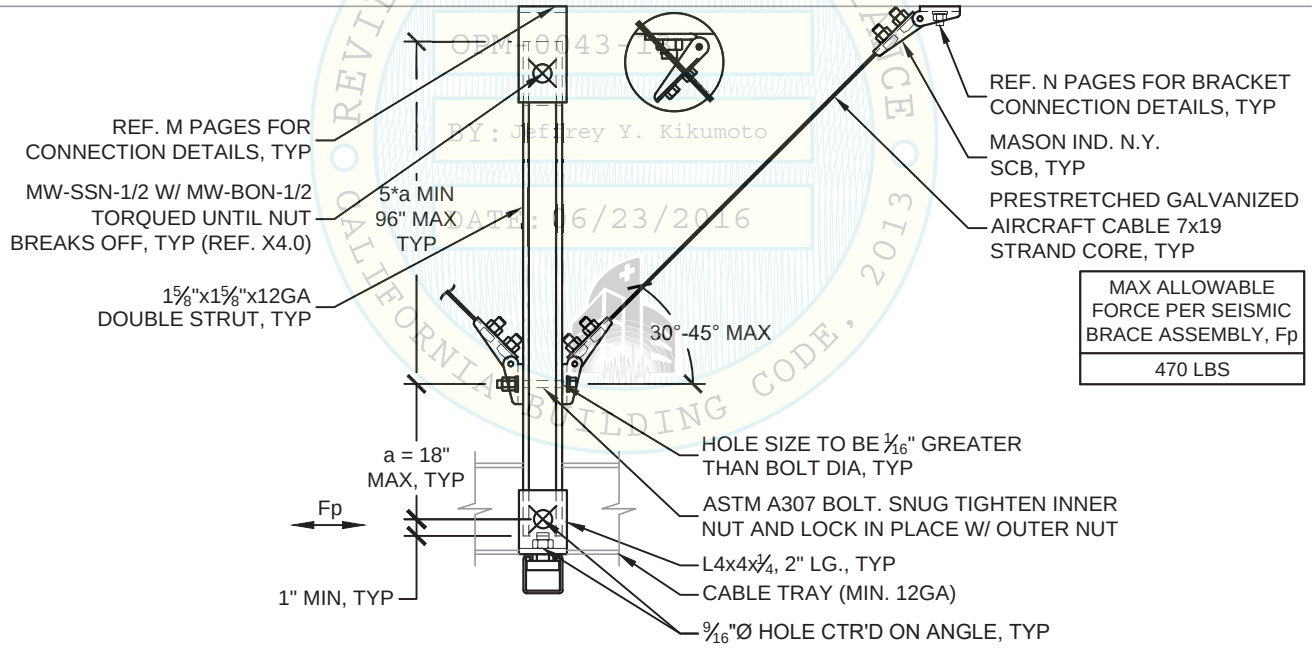

MAX ALLOWABLE FORCE PER SEISMIC BRACE ASSEMBLY, Fp
470 LBS

DOUBLE STRUT OPTION

OSHPD
OPM-0043-13
BY: Jeffrey Y. Kikumoto
DATE: 06/23/2016
REVIEWED FOR CODE COMPLIANCE
CALIFORNIA BUILDING CODE, 2013

NOTES:

1) REFER TO APPROPRIATE E PAGES FOR DIMENSIONS AND ANNOTATIONS NOT SHOWN.
2) SINGLE STRUT AND DOUBLE STRUT OPTIONS MAY CARRY UP TO A MAXIMUM OF 30LBS/FT OR 60LBS/FT, RESPECTIVELY.
3) CABLE TRAY SHALL BE APPROVED ON A PROJECT SPECIFIC BASIS OR PREAPPROVED BY OSHPD. SPACING LIMITS SET BY THE MANUFACTURER SHALL NOT BE EXCEEDED. CABLE TRAY BRACE SPACING SHALL BE APPROVED OR PREAPPROVED BY OSHPD.

MASON WEST, INC.
1601 E. Miraloma Ave. Placentia, CA 92870
TEL (714) 630 - 0701, www.masonwest.com

Jiefu "Jeff" Zhang, SE
California SE No. S5270

PAGE
A27.11

SEISMIC SOLID BRACING PIPE CLAMP OPTION FOR INDIVIDUALLY SUSPENDED CONDUIT

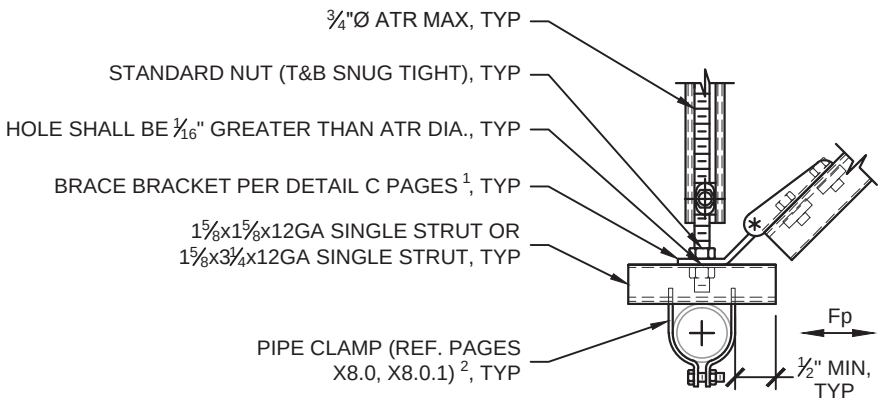

TRANSVERSE OPTION

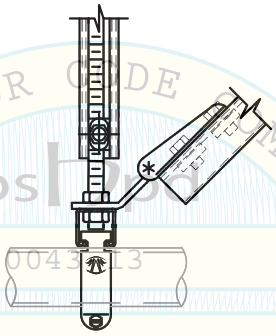

LONGITUDINAL OPTION

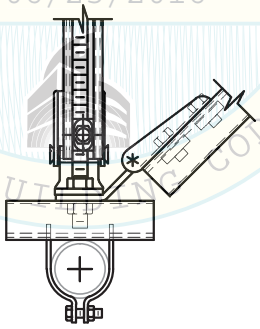

ALL-DIRECTIONAL OPTION

REVIEWED FOR CODE COMPLIANCE
OSHPD
OPM-0043-13
BY: Jeffrey Y. Kikumoto
DATE: 06/23/2016
CALIFORNIA BUILDING CODE, 2013

NOTES:
1) REFER TO APPROPRIATE DETAIL C PAGES FOR CALL-OUTS, DIMENSIONS AND NOTATIONS NOT SHOWN.
2) CLAMP RATING MAY LOWER MAX ALLOWABLE Fp.

MASON WEST, INC.
1601 E. Miraloma Ave. Placentia, CA 92870
TEL (714) 630 - 0701, www.masonwest.com

Jiefu "Jeff" Zhang, SE
California SE No. S5270

PAGE
A28.0

SEISMIC CABLE BRACING PIPE CLAMP OPTION FOR INDIVIDUALLY SUSPENDED CONDUIT

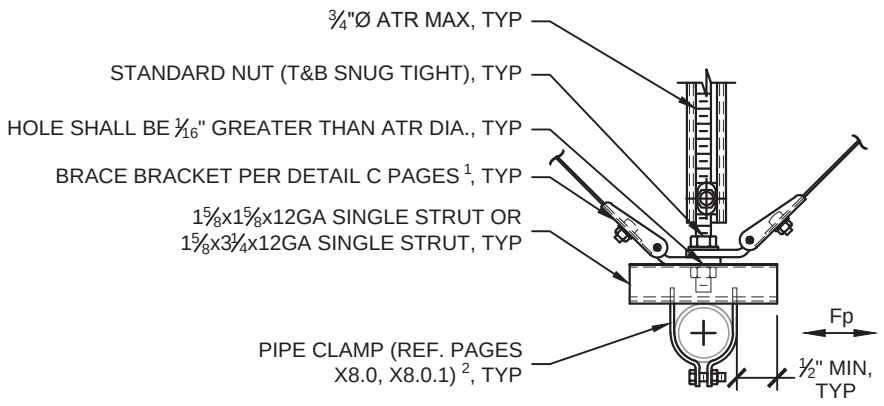

TRANSVERSE OPTION

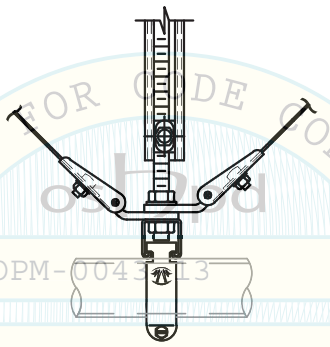

LONGITUDINAL OPTION

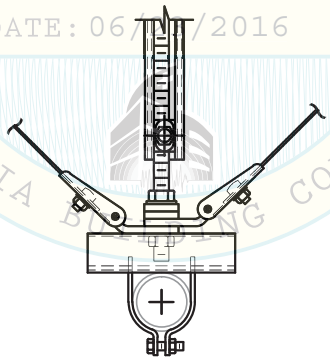

ALL-DIRECTIONAL OPTION

REVIEWED FOR CODE COMPLIANCE
CALIFORNIA BUILDING CODE, 2013
OPM-0043-13
BY: Jeffrey Y. Kikumoto
DATE: 06/23/2016

NOTES:
1) REFER TO APPROPRIATE DETAIL C PAGES FOR CALL-OUTS, DIMENSIONS AND NOTATIONS NOT SHOWN.
2) CLAMP RATING MAY LOWER MAX ALLOWABLE Fp.

MASON WEST, INC.
1601 E. Miraloma Ave. Placentia, CA 92870
TEL (714) 630 - 0701, www.masonwest.com

Jiefu "Jeff" Zhang, SE
California SE No. S5270

PAGE
A28.1

INDIVIDUALLY SUSPENDED STEEL PIPE

SEISMIC SOLID BRACING INSTALLATION REQUIREMENTS

LATERAL FORCE
Fp = 0.25g (ASD)
VERTICAL FORCE
Fpv = 0.375g (ASD)

Fp = 0.25g Fpv = 0.38g			SOLID (RIGID) BRACING FOR 45° BRACE ANGLE MAXIMUM BRACE SPACING - OPTION #1							
			INSTALLATION DETAILS							
			SEISMIC BRACE			HANGER CONNECTION			BRACE CONNECTION	
PIPE SIZE	WEIGHT	SUPPORT SPACING	TRANS.	LONG.	ALL-DIR.	TRANS.	LONG.	ALL-DIR.	TRANS.	LONG./ALL-DIR.
(DIA.)	(PLF)	(FT)	40 FT*	80 FT*	80 FT*	BRACE	BRACE	BRACE	BRACE	BRACE
2	6.2	10	C1.10	C1.11	C1.12	38C	38D	38E	50A	50C
2.5	9.1	11	C1.20	C1.21	C1.22	50D	50E	50F	50B	50D
3	12.1	12	C1.20	C1.21	C1.22	50E	50G	50G	50C	50E
4	18.3	14	C1.30	C1.32	C1.34	63G	63J	63K	63D	63F
5	26.6	16	C1.30	C1.32	C1.34	63K	63L	63M	63E	63G
6	34.8	17	C1.40	C1.43	C1.45	75L	75M	75N	63F	75J
8	55.1	19	C1.40	C1.47	C1.48	75P	75Q	75Q	63G	75L
10	80.2	20	C1.41	C1.47	C1.48	75Q	75R	75R	75J	75N
12	109	20	C1.41	C1.47	C1.48.1	75R	75S	75S	75L	75P
14	122	20	C1.46	C1.47	C1.48.1	75R	75S	75S	75M	75Q
16	150	20	C1.46	C1.47	C1.72	75S	75S	125T	75M	75Q
18	190	20	C1.46	C1.64	C1.75	75S	100T	125T	75N	125R

Fp = 0.25g Fpv = 0.38g			SOLID (RIGID) BRACING FOR 45° BRACE ANGLE MAXIMUM BRACE SPACING - OPTION #2							
			INSTALLATION DETAILS							
			SEISMIC BRACE			HANGER CONNECTION			BRACE CONNECTION	
PIPE SIZE	WEIGHT	SUPPORT SPACING	TRANS.	LONG.	ALL-DIR.	TRANS.	LONG.	ALL-DIR.	TRANS.	LONG./ALL-DIR.
(DIA.)	(PLF)	(FT)	30 FT*	60 FT*	60 FT*	BRACE	BRACE	BRACE	BRACE	BRACE
2	6.2	10	C1.10	C1.11	C1.12	38C	38D	38D	50A	50B
2.5	9.1	11	C1.20	C1.21	C1.22	50D	50E	50E	50A	50C
3	12.1	12	C1.20	C1.21	C1.22	50E	50F	50G	50B	50D
4	18.3	14	C1.30	C1.32	C1.34	63G	63H	63J	63C	63E
5	26.6	16	C1.30	C1.32	C1.34	63J	63K	63L	63D	63F
6	34.8	17	C1.40	C1.42	C1.44	75L	75M	75M	63E	63G
8	55.1	19	C1.40	C1.43	C1.45	75N	75P	75Q	63F	75K
10	80.2	20	C1.40	C1.47	C1.48	75Q	75Q	75R	63H	75L
12	109	20	C1.41	C1.47	C1.48	75R	75R	75S	75J	75N
14	122	20	C1.46	C1.47	C1.48	75R	75S	75S	75K	75N
16	150	20	C1.46	C1.47	C1.48.1	75S	75S	75S	75L	75P
18	190	20	C1.46	C1.47	C1.72	75S	75T	125T	75M	75Q
20	214	20	C1.70	C1.71	C1.75	125T	125T	125T	125N	125Q

* - BRACE SPACING SHALL NOT EXCEED THOSE TABULATED IN SECTION S.

NOTE: INSTALLATION DETAILS TABULATED ABOVE ARE BASED ON USE OF THE MW-WPL SEISMIC ATTACHMENT TO STEEL PIPE. IF THE DESIGNER PREFERS TO USE THE MW-SPC, CALCULATE THE SEISMIC DEMAND AND COMPARE IT TO THE SEISMIC CAPACITY OF THE MW-SPC AS SHOWN IN SECTION C. IF THE DEMAND IS LESS THAN OR EQUAL TO THE CAPACITY, THE MW-SPC IS ACCEPTABLE.

REVIEWED FOR CODE COMPLIANCE
OSHPD
OPM-0043-13
Reviewed by Jeffrey Kikumoto
DSA 06/23/2016

MASON WEST, INC.
1601 E. Miraloma Ave. Placentia, CA 92870
TEL (714) 630 - 0701, www.masonwest.com

Jiefu "Jeff" Zhang, SE
California SE No. S5270

PAGE
B1.0

INDIVIDUALLY SUSPENDED STEEL PIPE

SEISMIC SOLID BRACING INSTALLATION REQUIREMENTS

LATERAL FORCE
Fp = 0.25g (ASD)
VERTICAL FORCE
Fpv = 0.375g (ASD)

Fp = 0.25g Fpv = 0.38g			SOLID (RIGID) BRACING FOR 45° BRACE ANGLE MAXIMUM BRACE SPACING - OPTION #3							
			INSTALLATION DETAILS							
			SEISMIC BRACE			HANGER CONNECTION			BRACE CONNECTION	
PIPE SIZE	WEIGHT	SUPPORT SPACING	TRANS.	LONG.	ALL-DIR.	TRANS.	LONG.	ALL-DIR.	TRANS.	LONG./ALL-DIR.
(DIA.)	(PLF)	(FT)	20 FT*	20 FT*	20 FT*	BRACE	BRACE	BRACE	BRACE	BRACE
2	6.2	10	C1.10	C1.11	C1.12	38B	38B	38C	50A	50A
2.5	9.1	11	C1.20	C1.21	C1.22	50D	50D	50D	50A	50A
3	12.1	12	C1.20	C1.21	C1.22	50E	50E	50E	50A	50A
4	18.3	14	C1.30	C1.32	C1.34	63F	63F	63G	63B	63B
5	26.6	16	C1.30	C1.32	C1.34	63J	63J	63J	63C	63C
6	34.8	17	C1.40	C1.42	C1.44	75K	75K	75L	63D	63D
8	55.1	19	C1.40	C1.42	C1.44	75N	75N	75N	63E	63E
10	80.2	20	C1.50	C1.51	C1.52	88Q	88Q	88Q	63F	63F
12	109	20	C1.50	C1.51	C1.52	88R	88R	88R	63G	63G
14	122	20	C1.46	C1.47	C1.48	75R	75R	75R	75H	75H
16	150	20	C1.46	C1.47	C1.48	75R	75R	75S	75J	75J
18	190	20	C1.46	C1.47	C1.48	75S	75S	75S	75K	75K
20	214	20	C1.70	C1.71	C1.72	125S	125S	125S	125L	125L
24	189	20	C1.70	C1.71	C1.72	125T	125T	125T	125M	125M

* - BRACE SPACING SHALL NOT EXCEED THOSE TABULATED IN SECTION S.

NOTE: INSTALLATION DETAILS TABULATED ABOVE ARE BASED ON USE OF THE MW-WPL SEISMIC ATTACHMENT TO STEEL PIPE. IF THE DESIGNER PREFERS TO USE THE MW-SPC, CALCULATE THE SEISMIC DEMAND AND COMPARE IT TO THE SEISMIC CAPACITY OF THE MW-SPC AS SHOWN IN SECTION C. IF THE DEMAND IS LESS THAN OR EQUAL TO THE CAPACITY, THE MW-SPC IS ACCEPTABLE.

REVIEWED FOR CODE COMPLIANCE
CALIFORNIA BUILDING CODE, 2013
OSHPD
OPM-0043-13
BY: Jeffrey Y. Kikumoto
DATE: 06/23/2016

MASON WEST, INC.
1601 E. Miraloma Ave. Placentia, CA 92870
TEL (714) 630 - 0701, www.masonwest.com

Jiefu "Jeff" Zhang, SE
California SE No. S5270

PAGE
B1.0.1

INDIVIDUALLY SUSPENDED STEEL PIPE

SEISMIC SOLID BRACING INSTALLATION REQUIREMENTS

LATERAL FORCE
Fp = 0.5g (ASD)
VERTICAL FORCE
Fpv = 0.375g (ASD)

Fp = 0.5g Fpv = 0.38g			SOLID (RIGID) BRACING FOR 45° BRACE ANGLE MAXIMUM BRACE SPACING - OPTION #1							
			INSTALLATION DETAILS							
			SEISMIC BRACE			HANGER CONNECTION			BRACE CONNECTION	
PIPE SIZE	WEIGHT	SUPPORT SPACING	TRANS.	LONG.	ALL-DIR.	TRANS.	LONG.	ALL-DIR.	TRANS.	LONG./ALL-DIR.
(DIA.)	(PLF)	(FT)	30 FT*	60 FT*	60 FT*	BRACE	BRACE	BRACE	BRACE	BRACE
2	6.2	10	C1.10	C1.11	C1.12	38D	38E	38F	50B	50D
2.5	9.1	11	C1.20	C1.21	C1.22	50E	50F	50G	50C	50E
3	12.1	12	C1.20	C1.21	C1.22	50F	50H	50J	50D	50F
4	18.3	14	C1.30	C1.32	C1.34	63H	63K	63L	63E	63G
5	26.6	16	C1.30	C1.33	C1.45	63K	63M	75N	63F	63J
6	34.8	17	C1.40	C1.43	C1.45	75M	75N	75P	63G	75L
8	55.1	10	C1.41	C1.47	C1.48	75P	75Q	75R	75K	75N
10	80.2	20	C1.46	C1.47	C1.48.1	75Q	75R	75S	75L	75P
12	109	20	C1.46	C1.64	C1.75	75R	100S	125T	75N	125Q
14	122	20	C1.46	C1.64	C1.75	75S	100S	125T	75N	125R
16	150	20	C1.46	C1.74	C1.75	75S	125T	125T	75P	125R

Fp = 0.5g Fpv = 0.38g			SOLID (RIGID) BRACING FOR 45° BRACE ANGLE MAXIMUM BRACE SPACING - OPTION #2							
			INSTALLATION DETAILS							
			SEISMIC BRACE			HANGER CONNECTION			BRACE CONNECTION	
PIPE SIZE	WEIGHT	SUPPORT SPACING	TRANS.	LONG.	ALL-DIR.	TRANS.	LONG.	ALL-DIR.	TRANS.	LONG./ALL-DIR.
(DIA.)	(PLF)	(FT)	20 FT*	30 FT*	30 FT*	BRACE	BRACE	BRACE	BRACE	BRACE
2	6.2	10	C1.10	C1.11	C1.12	38C	38D	38D	50A	50B
2.5	9.1	11	C1.20	C1.21	C1.22	50D	50E	50E	50B	50C
3	12.1	12	C1.20	C1.21	C1.22	50E	50F	50G	50C	50D
4	18.3	14	C1.30	C1.32	C1.34	63G	63H	63J	63D	63E
5	26.6	16	C1.30	C1.32	C1.34	63K	63K	63L	63E	63F
6	34.8	17	C1.40	C1.42	C1.44	75L	75M	75M	63F	63G
8	55.1	19	C1.40	C1.43	C1.45	75P	75P	75Q	63G	75K
10	80.2	20	C1.41	C1.47	C1.48	75Q	75Q	75R	75J	75L
12	109	20	C1.41	C1.47	C1.48	75R	75R	75S	75L	75N
14	122	20	C1.46	C1.47	C1.48	75R	75S	75S	75M	75N
16	150	20	C1.46	C1.47	C1.48.1	75S	75S	75S	75M	75P
18	190	20	C1.46	C1.47	C1.72	75S	75T	125T	75N	75Q
20	214	20	C1.70	C1.71	C1.75	125T	125T	125T	125P	125Q

* - BRACE SPACING SHALL NOT EXCEED THOSE TABULATED IN SECTION S.

NOTE: INSTALLATION DETAILS TABULATED ABOVE ARE BASED ON USE OF THE MW-WPL SEISMIC ATTACHMENT TO STEEL PIPE. IF THE DESIGNER PREFERS TO USE THE MW-SPC, CALCULATE THE SEISMIC DEMAND AND COMPARE IT TO THE SEISMIC CAPACITY OF THE MW-SPC AS SHOWN IN SECTION C. IF THE DEMAND IS LESS THAN OR EQUAL TO THE CAPACITY, THE MW-SPC IS ACCEPTABLE.

REVIEWED FOR CODE COMPLIANCE
OSHPD
OPM-0043-13
Reviewed by: Jeffrey Kikumoto
DATE: 6/23/2016
OFFICE OF STATEWIDE HEALTH PLANNING AND DEVELOPMENT

MASON WEST, INC.
1601 E. Miraloma Ave. Placentia, CA 92870
TEL (714) 630 - 0701, www.masonwest.com

Jiefu "Jeff" Zhang, SE
California SE No. S5270

PAGE
B1.1

INDIVIDUALLY SUSPENDED STEEL PIPE

SEISMIC SOLID BRACING INSTALLATION REQUIREMENTS

LATERAL FORCE
Fp = 0.5g (ASD)
VERTICAL FORCE
Fpv = 0.375g (ASD)

Fp = 0.5g Fpv = 0.38g			SOLID (RIGID) BRACING FOR 45° BRACE ANGLE MAXIMUM BRACE SPACING - OPTION #3							
			INSTALLATION DETAILS							
			SEISMIC BRACE			HANGER CONNECTION			BRACE CONNECTION	
PIPE SIZE	WEIGHT	SUPPORT SPACING	TRANS.	LONG.	ALL-DIR.	TRANS.	LONG.	ALL-DIR.	TRANS.	LONG./ALL-DIR.
(DIA.)	(PLF)	(FT)	10 FT*	20 FT*	20 FT*	BRACE	BRACE	BRACE	BRACE	BRACE
2	6.2	10	C1.10	C1.11	C1.12	38B	38C	38D	50A	50A
2.5	9.1	11	C1.20	C1.21	C1.22	50D	50D	50E	50A	50B
3	12.1	12	C1.20	C1.21	C1.22	50E	50E	50F	50A	50C
4	18.3	14	C1.30	C1.32	C1.34	63F	63G	63H	63B	63D
5	26.6	16	C1.30	C1.32	C1.34	63J	63K	63K	63C	63E
6	34.8	17	C1.40	C1.42	C1.44	75K	75L	75M	63D	63F
8	55.1	19	C1.40	C1.42	C1.44	75N	75P	75P	63E	63G
10	80.2	20	C1.50	C1.43	C1.45	88Q	75Q	75Q	63F	75J
12	109	20	C1.50	C1.43	C1.45	88R	75R	75R	63G	75L
14	122	20	C1.46	C1.47	C1.48	75R	75R	75S	75H	75M
16	150	20	C1.46	C1.47	C1.48	75R	75S	75S	75J	75M
18	190	20	C1.46	C1.47	C1.48	75S	75S	75T	75K	75N
20	214	20	C1.70	C1.71	C1.72	125S	125T	125T	125L	125P

* - BRACE SPACING SHALL NOT EXCEED THOSE TABULATED IN SECTION S.

NOTE: INSTALLATION DETAILS TABULATED ABOVE ARE BASED ON USE OF THE MW-WPL SEISMIC ATTACHMENT TO STEEL PIPE. IF THE DESIGNER PREFERS TO USE THE MW-SPC, CALCULATE THE SEISMIC DEMAND AND COMPARE IT TO THE SEISMIC CAPACITY OF THE MW-SPC AS SHOWN IN SECTION C. IF THE DEMAND IS LESS THAN OR EQUAL TO THE CAPACITY, THE MW-SPC IS ACCEPTABLE.

REVIEWED FOR CODE COMPLIANCE
CALIFORNIA BUILDING CODE, 2013
OPM-0043-13
BY: Jeffrey Y. Kikumoto
DATE: 06/23/2016

MASON WEST, INC.
1601 E. Miraloma Ave. Placentia, CA 92870
TEL (714) 630 - 0701, www.masonwest.com

Jiefu "Jeff" Zhang, SE
California SE No. S5270

PAGE
B1.1.1

INDIVIDUALLY SUSPENDED STEEL PIPE

SEISMIC SOLID BRACING INSTALLATION REQUIREMENTS

LATERAL FORCE
Fp = 1.0g (ASD)
VERTICAL FORCE
Fpv = 0.375g (ASD)

Fp = 1g Fpv = 0.38g			SOLID (RIGID) BRACING FOR 45° BRACE ANGLE MAXIMUM BRACE SPACING - OPTION #1							
PIPE SIZE	WEIGHT	SUPPORT SPACING	INSTALLATION DETAILS							
			SEISMIC BRACE			HANGER CONNECTION			BRACE CONNECTION	
			TRANS.	LONG.	ALL-DIR.	TRANS.	LONG.	ALL-DIR.	TRANS.	LONG./ALL-DIR.
(DIA.)	(PLF)	(FT)	40 FT*	40 FT*	40 FT*	BRACE	BRACE	BRACE	BRACE	BRACE
2	6.2	10	C1.10	C1.11	C1.12	38E	38E	38F	50E	50E
2.5	9.1	11	C1.20	C1.21	C1.22	50G	50G	50H	50F	50F
3	12.1	12	C1.30	C1.21	C1.22	63J	50J	50K	63G	50G
4	18.3	14	C1.31	C1.33	C1.35	63L	63L	63M	63J	63J
5	26.6	16	C1.41	C1.33	C1.45	75N	63N	75P	75L	63L
6	34.8	17	C1.46	C1.47	C1.48	75P	75P	75Q	75M	75M
8	55.1	19	C1.46	C1.47	C1.48.1	75R	75R	75R	75P	75P
10	80.2	20	C1.70	C1.64	C1.75	125S	100S	125S	125Q	125Q
12	109	20	C1.73	C1.74	C1.75	125T	125T	125T	125R	125R
14	122	20	C1.73	C1.74	C1.75	125T	125T	125T	125S	125S

Fp = 1g Fpv = 0.38g			SOLID (RIGID) BRACING FOR 45° BRACE ANGLE MAXIMUM BRACE SPACING - OPTION #2							
PIPE SIZE	WEIGHT	SUPPORT SPACING	INSTALLATION DETAILS							
			SEISMIC BRACE			HANGER CONNECTION			BRACE CONNECTION	
			TRANS.	LONG.	ALL-DIR.	TRANS.	LONG.	ALL-DIR.	TRANS.	LONG./ALL-DIR.
(DIA.)	(PLF)	(FT)	30 FT*	30 FT*	30 FT*	BRACE	BRACE	BRACE	BRACE	BRACE
2	6.2	10	C1.10	C1.11	C1.12	38E	38E	38F	50D	50D
2.5	9.1	11	C1.20	C1.21	C1.22	50F	50F	50G	50E	50E
3	12.1	12	C1.20	C1.21	C1.22	50H	50H	50J	63F	50F
4	18.3	14	C1.30	C1.32	C1.34	63K	63K	63L	63G	63G
5	26.6	16	C1.41	C1.33	C1.45	75M	63M	75N	75J	63J
6	34.8	17	C1.41	C1.43	C1.45	75N	75N	75P	75L	75L
8	55.1	19	C1.46	C1.47	C1.48	75Q	75Q	75R	75N	75N
10	80.2	20	C1.46	C1.47	C1.48.1	75R	75R	75S	75P	75P
12	109	20	C1.70	C1.64	C1.75	125S	100S	125T	125Q	125Q
14	122	20	C1.70	C1.64	C1.75	125S	100S	125T	125R	125R
16	150	20	C1.73	C1.74	C1.75	125T	125T	125T	125R	125R

* - BRACE SPACING SHALL NOT EXCEED THOSE TABULATED IN SECTION S.

NOTE: INSTALLATION DETAILS TABULATED ABOVE ARE BASED ON USE OF THE MW-WPL SEISMIC ATTACHMENT TO STEEL PIPE. IF THE DESIGNER PREFERS TO USE THE MW-SPC, CALCULATE THE SEISMIC DEMAND AND COMPARE IT TO THE SEISMIC CAPACITY OF THE MW-SPC AS SHOWN IN SECTION C. IF THE DEMAND IS LESS THAN OR EQUAL TO THE CAPACITY, THE MW-SPC IS ACCEPTABLE.

REVIEWED FOR CODE COMPLIANCE
OSHPD
OPM-0043-13
DATE 6/23/2016
BY: Jeffrey Y. Kikumoto
STATE OF CALIFORNIA
OFFICE OF STATEWIDE HEALTH PLANNING AND DEVELOPMENT

MASON WEST, INC.
1601 E. Miraloma Ave. Placentia, CA 92870
TEL (714) 630 - 0701, www.masonwest.com

Jiefu "Jeff" Zhang, SE
California SE No. S5270

PAGE
B1.2

INDIVIDUALLY SUSPENDED STEEL PIPE

SEISMIC SOLID BRACING INSTALLATION REQUIREMENTS

LATERAL FORCE
Fp = 1.0g (ASD)
VERTICAL FORCE
Fpv = 0.375g (ASD)

Fp = 1g Fpv = 0.38g			SOLID (RIGID) BRACING FOR 45° BRACE ANGLE MAXIMUM BRACE SPACING - OPTION #3							
PIPE SIZE	WEIGHT	SUPPORT SPACING	INSTALLATION DETAILS							
			SEISMIC BRACE			HANGER CONNECTION			BRACE CONNECTION	
			TRANS.	LONG.	ALL-DIR.	TRANS.	LONG.	ALL-DIR.	TRANS.	LONG./ALL-DIR.
(DIA.)	(PLF)	(FT)	20 FT*	20 FT*	20 FT*	BRACE	BRACE	BRACE	BRACE	BRACE
2	6.2	10	C1.10	C1.11	C1.12	38D	38D	38E	50C	50C
2.5	9.1	11	C1.20	C1.21	C1.22	50E	50E	50F	50D	50D
3	12.1	12	C1.20	C1.21	C1.22	50G	50G	50G	50E	50E
4	18.3	14	C1.30	C1.32	C1.34	63J	63J	63K	63F	63F
5	26.6	16	C1.30	C1.32	C1.34	63L	63L	63M	63G	63G
6	34.8	17	C1.41	C1.43	C1.45	75M	75M	75N	75J	75J
8	55.1	19	C1.46	C1.47	C1.48	75Q	75Q	75Q	75L	75L
10	80.2	20	C1.46	C1.47	C1.48	75R	75R	75R	75N	75N
12	109	20	C1.46	C1.47	C1.48.1	75S	75S	75S	75P	75P
14	122	20	C1.46	C1.47	C1.48.1	75S	75S	75S	75Q	75Q
16	150	20	C1.63	C1.47	C1.72	100S	75S	125T	125Q	75Q
18	190	20	C1.70	C1.64	C1.75	125T	100T	125T	125R	125R

* - BRACE SPACING SHALL NOT EXCEED THOSE TABULATED IN SECTION S.

NOTE: INSTALLATION DETAILS TABULATED ABOVE ARE BASED ON USE OF THE MW-WPL SEISMIC ATTACHMENT TO STEEL PIPE. IF THE DESIGNER PREFERS TO USE THE MW-SPC, CALCULATE THE SEISMIC DEMAND AND COMPARE IT TO THE SEISMIC CAPACITY OF THE MW-SPC AS SHOWN IN SECTION C. IF THE DEMAND IS LESS THAN OR EQUAL TO THE CAPACITY, THE MW-SPC IS ACCEPTABLE.

REVIEWED FOR CODE COMPLIANCE
CALIFORNIA BUILDING CODE, 2013
OPM-0043-13
BY: Jeffrey Y. Kikumoto
DATE: 06/23/2016

MASON WEST, INC.
1601 E. Miraloma Ave. Placentia, CA 92870
TEL (714) 630 - 0701, www.masonwest.com

Jiefu "Jeff" Zhang, SE
California SE No. S5270

INDIVIDUALLY SUSPENDED STEEL PIPE

SEISMIC CABLE BRACING INSTALLATION REQUIREMENTS

LATERAL FORCE
Fp = 0.25g (ASD)
VERTICAL FORCE
Fpv = 0.375g (ASD)

Fp = 0.25g Fpv = 0.38g			STANDARD CABLE BRACING FOR 45° BRACE ANGLE MAXIMUM BRACE SPACING - OPTION #1					
			INSTALLATION DETAILS					
			BRACE DIRECTION/SPACING			HANGER CONNECTION TYPE	BRACE CONNECTION	
PIPE SIZE	WEIGHT	SUPPORT SPACING	TRANS.	LONG.	ALL-DIR.		TRANS.	LONG./ALL-DIR.
(DIA.)	(PLF)	(FT)	40 FT*	80 FT*	80 FT*		BRACE	BRACE
2	6.2	10	C2.10	C2.11	C2.12	38B	38A	38C
2.5	9.1	11	C2.20	C2.21	C2.22	50C	50B	50D
3	12.1	12	C2.20	C2.21	C2.22	50D	50C	50E
4	18.3	14	C2.30	C2.31	C2.32	63F	50D	50F
5	26.6	16	C2.30	C2.31	C2.32	63H	50E	50G
6	34.8	17	C2.40	C2.41	C2.42	75J	63F	63J

Fp = 0.25g Fpv = 0.38g			STANDARD CABLE BRACING FOR 45° BRACE ANGLE MAXIMUM BRACE SPACING - OPTION #2					
			INSTALLATION DETAILS					
			BRACE DIRECTION/SPACING			HANGER CONNECTION TYPE	BRACE CONNECTION	
PIPE SIZE	WEIGHT	SUPPORT SPACING	TRANS.	LONG.	ALL-DIR.		TRANS.	LONG./ALL-DIR.
(DIA.)	(PLF)	(FT)	30 FT*	60 FT*	60 FT*		BRACE	BRACE
2	6.2	10	C2.10	C2.11	C2.12	38B	38A	38B
2.5	9.1	11	C2.20	C2.21	C2.22	50C	50A	50C
3	12.1	12	C2.20	C2.21	C2.22	50D	50B	50D
4	18.3	14	C2.30	C2.31	C2.32	63F	50C	50E
5	26.6	16	C2.30	C2.31	C2.32	63H	50D	50F
6	34.8	17	C2.40	C2.41	C2.42	75J	63E	63G
8	55.1	19	C2.40	C2.41	C2.42	75M	63F	63K

Fp = 0.25g Fpv = 0.38g			STANDARD CABLE BRACING FOR 45° BRACE ANGLE MAXIMUM BRACE SPACING - OPTION #3					
			INSTALLATION DETAILS					
			BRACE DIRECTION/SPACING			HANGER CONNECTION TYPE	BRACE CONNECTION	
PIPE SIZE	WEIGHT	SUPPORT SPACING	TRANS.	LONG.	ALL-DIR.		TRANS.	LONG./ALL-DIR.
(DIA.)	(PLF)	(FT)	20 FT*	20 FT*	20 FT*		BRACE	BRACE
2	6.2	10	C2.10	C2.11	C2.12	38B	38A	38A
2.5	9.1	11	C2.20	C2.21	C2.22	50C	50A	50A
3	12.1	12	C2.20	C2.21	C2.22	50D	50A	50A
4	18.3	14	C2.30	C2.31	C2.32	63F	50B	50B
5	26.6	16	C2.30	C2.31	C2.32	63H	50C	50C
6	34.8	17	C2.40	C2.41	C2.42	75J	63D	63D
8	55.1	19	C2.40	C2.41	C2.42	75M	63E	63E
10	80.2	20	C2.50	C2.51	C2.52	88P	63F	63F
12	109	20	C2.50	C2.51	C2.52	88Q	63G	63G

* - BRACE SPACING SHALL NOT EXCEED THOSE TABULATED IN SECTION S.

NOTE: INSTALLATION DETAILS TABULATED ABOVE ARE BASED ON USE OF THE MW-WPL SEISMIC ATTACHMENT TO STEEL PIPE. IF THE DESIGNER PREFERS TO USE THE MW-SPC, CALCULATE THE SEISMIC DEMAND AND COMPARE IT TO THE SEISMIC CAPACITY OF THE MW-SPC AS SHOWN IN SECTION C. IF THE DEMAND IS LESS THAN OR EQUAL TO THE CAPACITY, THE MW-SPC IS ACCEPTABLE.

REVIEWED FOR CODE COMPLIANCE
OSHPD
OPM-0043-13
BY: Jeffrey Y. Kikumoto
DATE: 06/23/2016
CALIFORNIA BUILDING CODE, 2013

MASON WEST, INC.
1601 E. Miraloma Ave. Placentia, CA 92870
TEL (714) 630 - 0701, www.masonwest.com

Jiefu "Jeff" Zhang, SE
California SE No. S5270

INDIVIDUALLY SUSPENDED STEEL PIPE

SEISMIC CABLE BRACING INSTALLATION REQUIREMENTS

LATERAL FORCE
Fp = 0.5g (ASD)
VERTICAL FORCE
Fpv = 0.375g (ASD)

Fp = 0.5g Fpv = 0.38g			STANDARD CABLE BRACING FOR 45° BRACE ANGLE MAXIMUM BRACE SPACING - OPTION #1					
			INSTALLATION DETAILS					
			BRACE DIRECTION/SPACING			HANGER CONNECTION TYPE	BRACE CONNECTION	
PIPE SIZE	WEIGHT	SUPPORT SPACING	TRANS.	LONG.	ALL-DIR.		TRANS.	LONG./ALL-DIR.
(DIA.)	(PLF)	(FT)	30 FT*	60 FT*	60 FT*		BRACE	BRACE
2	6.2	10	C2.10	C2.11	C2.12	38B	38B	38D
2.5	9.1	11	C2.20	C2.21	C2.22	50C	50C	50E
3	12.1	12	C2.20	C2.21	C2.22	50D	50D	50F
4	18.3	14	C2.30	C2.41	C2.42	63F	50E	63G
5	26.6	16	C2.30	C2.41	C2.42	63H	50F	63J

Fp = 0.5g Fpv = 0.38g			STANDARD CABLE BRACING FOR 45° BRACE ANGLE MAXIMUM BRACE SPACING - OPTION #2					
			INSTALLATION DETAILS					
			BRACE DIRECTION/SPACING			HANGER CONNECTION TYPE	BRACE CONNECTION	
PIPE SIZE	WEIGHT	SUPPORT SPACING	TRANS.	LONG.	ALL-DIR.		TRANS.	LONG./ALL-DIR.
(DIA.)	(PLF)	(FT)	20 FT*	30 FT*	30 FT*		BRACE	BRACE
2	6.2	10	C2.10	C2.11	C2.12	38B	38A	38B
2.5	9.1	11	C2.20	C2.21	C2.22	50C	50B	50C
3	12.1	12	C2.20	C2.21	C2.22	50D	50C	50D
4	18.3	14	C2.30	C2.31	C2.32	63F	50D	50E
5	26.6	16	C2.30	C2.31	C2.32	63H	50E	50F
6	34.8	17	C2.40	C2.41	C2.42	75J	63F	63G
8	55.1	19	C2.40	C2.41	C2.42	75M	63G	63K

Fp = 0.5g Fpv = 0.38g			STANDARD CABLE BRACING FOR 45° BRACE ANGLE MAXIMUM BRACE SPACING - OPTION #3					
			INSTALLATION DETAILS					
			BRACE DIRECTION/SPACING			HANGER CONNECTION TYPE	BRACE CONNECTION	
PIPE SIZE	WEIGHT	SUPPORT SPACING	TRANS.	LONG.	ALL-DIR.		TRANS.	LONG./ALL-DIR.
(DIA.)	(PLF)	(FT)	10 FT*	20 FT*	20 FT*		BRACE	BRACE
2	6.2	10	C2.10	C2.11	C2.12	38B	38A	38A
2.5	9.1	11	C2.20	C2.21	C2.22	50C	50A	50B
3	12.1	12	C2.20	C2.21	C2.22	50D	50A	50C
4	18.3	14	C2.30	C2.31	C2.32	63F	50B	50D
5	26.6	16	C2.30	C2.31	C2.32	63H	50C	50E
6	34.8	17	C2.40	C2.41	C2.42	75J	63D	63F
8	55.1	19	C2.40	C2.41	C2.42	75M	63E	63G
10	80.2	20	C2.50	C2.51	C2.52	88P	63F	63J

* - BRACE SPACING SHALL NOT EXCEED THOSE TABULATED IN SECTION S.

NOTE: INSTALLATION DETAILS TABULATED ABOVE ARE BASED ON USE OF THE MW-WPL SEISMIC ATTACHMENT TO STEEL PIPE. IF THE DESIGNER PREFERS TO USE THE MW-SPC, CALCULATE THE SEISMIC DEMAND AND COMPARE IT TO THE SEISMIC CAPACITY OF THE MW-SPC AS SHOWN IN SECTION C. IF THE DEMAND IS LESS THAN OR EQUAL TO THE CAPACITY, THE MW-SPC IS ACCEPTABLE.

CERTIFIED FOR CODE COMPLIANCE
OSHPD
OPM-0043-13
DATE 06/23/2016
BY Jeffrey Kikumoto
CALIFORNIA BUILDING CODE 2013

MASON WEST, INC.
1601 E. Miraloma Ave. Placentia, CA 92870
TEL (714) 630 - 0701, www.masonwest.com

Jiefu "Jeff" Zhang, SE
California SE No. S5270

INDIVIDUALLY SUSPENDED STEEL PIPE

SEISMIC CABLE BRACING INSTALLATION REQUIREMENTS

LATERAL FORCE
Fp = 1.0g (ASD)
VERTICAL FORCE
Fpv = 0.375g (ASD)

Fp = 1g Fpv = 0.38g			STANDARD CABLE BRACING FOR 45° BRACE ANGLE MAXIMUM BRACE SPACING - OPTION #1					
PIPE SIZE	WEIGHT	SUPPORT SPACING	INSTALLATION DETAILS					
			BRACE DIRECTION/SPACING			HANGER CONNECTION TYPE	BRACE CONNECTION	
			TRANS.	LONG.	ALL-DIR.		TRANS.	LONG./ALL-DIR.
(DIA.)	(PLF)	(FT)	40 FT*	40 FT*	40 FT*		BRACE	BRACE
2	6.2	10	C2.10	C2.11	C2.12	38B	38E	38E
2.5	9.1	11	C2.20	C2.21	C2.22	50C	50F	50F
3	12.1	12	C2.30	C2.21	C2.22	63D	50G	50G
4	18.3	14	C2.40	C2.41	C2.42	75F	63J	63J

Fp = 1g Fpv = 0.38g			STANDARD CABLE BRACING FOR 45° BRACE ANGLE MAXIMUM BRACE SPACING - OPTION #2					
PIPE SIZE	WEIGHT	SUPPORT SPACING	INSTALLATION DETAILS					
			BRACE DIRECTION/SPACING			HANGER CONNECTION TYPE	BRACE CONNECTION	
			TRANS.	LONG.	ALL-DIR.		TRANS.	LONG./ALL-DIR.
(DIA.)	(PLF)	(FT)	30 FT*	30 FT*	30 FT*		BRACE	BRACE
2	6.2	10	C2.10	C2.11	C2.12	38B	38D	38D
2.5	9.1	11	C2.20	C2.21	C2.22	50C	50E	50E
3	12.1	12	C2.20	C2.21	C2.22	50D	50F	50F
4	18.3	14	C2.40	C2.41	C2.42	75F	63G	63G
5	26.6	16	C2.40	C2.41	C2.42	75H	63J	63J

Fp = 1g Fpv = 0.38g			STANDARD CABLE BRACING FOR 45° BRACE ANGLE MAXIMUM BRACE SPACING - OPTION #3					
PIPE SIZE	WEIGHT	SUPPORT SPACING	INSTALLATION DETAILS					
			BRACE DIRECTION/SPACING			HANGER CONNECTION TYPE	BRACE CONNECTION	
			TRANS.	LONG.	ALL-DIR.		TRANS.	LONG./ALL-DIR.
(DIA.)	(PLF)	(FT)	20 FT*	20 FT*	20 FT*		BRACE	BRACE
2	6.2	10	C2.10	C2.11	C2.12	38B	38C	38C
2.5	9.1	11	C2.20	C2.21	C2.22	50C	50D	50D
3	12.1	12	C2.20	C2.21	C2.22	50D	50E	50E
4	18.3	14	C2.30	C2.31	C2.32	63F	50F	50F
5	26.6	16	C2.30	C2.31	C2.32	63H	50G	50G
6	34.8	17	C2.40	C2.41	C2.42	75J	63J	63J

* - BRACE SPACING SHALL NOT EXCEED THOSE TABULATED IN SECTION S.

NOTE: INSTALLATION DETAILS TABULATED ABOVE ARE BASED ON USE OF THE MW-WPL SEISMIC ATTACHMENT TO STEEL PIPE. IF THE DESIGNER PREFERS TO USE THE MW-SPC, CALCULATE THE SEISMIC DEMAND AND COMPARE IT TO THE SEISMIC CAPACITY OF THE MW-SPC AS SHOWN IN SECTION C. IF THE DEMAND IS LESS THAN OR EQUAL TO THE CAPACITY, THE MW-SPC IS ACCEPTABLE.

REVIEWED FOR CODE COMPLIANCE
OSP Dpd
OPM-0043-13
BY: Jeffrey Y. Kikumoto
DATE: 06/23/2016
CALIFORNIA BUILDING CODE

MASON WEST, INC.
1601 E. Miraloma Ave. Placentia, CA 92870
TEL (714) 630 - 0701, www.masonwest.com

Jiefu "Jeff" Zhang, SE
California SE No. S5270

PAGE
B1.5

INDIVIDUALLY SUSPENDED CAST IRON PIPE

SEISMIC SOLID BRACING INSTALLATION REQUIREMENTS

LATERAL FORCE
Fp = 0.25g (ASD)
VERTICAL FORCE
Fpv = 0.375g (ASD)

Fp = 0.25g
Fpv = 0.38g

SOLID (RIGID) BRACING FOR 45° BRACE ANGLE
MAXIMUM BRACE SPACING - OPTION #1

PIPE SIZE	WEIGHT	SUPPORT SPACING	INSTALLATION DETAILS							
			SEISMIC BRACE			HANGER CONNECTION			BRACE CONNECTION	
			TRANS.	LONG.	ALL-DIR.	TRANS.	LONG.	ALL-DIR.	TRANS.	LONG./ALL-DIR.
(DIA.)	(PLF)	(FT)	40 FT*	80 FT*	80 FT*	BRACE	BRACE	BRACE	BRACE	BRACE
2	5.1	8	C1.10	C1.11	C1.12	38B	38C	38D	50A	50B
3	8.4	8	C1.20	C1.21	C1.22	50D	50E	50E	50B	50D
4	13	8	C1.30	C1.32	C1.34	63E	63F	63G	63C	63E
5	18	8	C1.30	C1.32	C1.34	63F	63G	63J	63D	63F
6	23.4	8	C1.40	C1.51	C1.52	75K	88J	88K	63D	63G

Fp = 0.25g
Fpv = 0.38g

SOLID (RIGID) BRACING FOR 45° BRACE ANGLE
MAXIMUM BRACE SPACING - OPTION #2

PIPE SIZE	WEIGHT	SUPPORT SPACING	INSTALLATION DETAILS							
			SEISMIC BRACE			HANGER CONNECTION			BRACE CONNECTION	
			TRANS.	LONG.	ALL-DIR.	TRANS.	LONG.	ALL-DIR.	TRANS.	LONG./ALL-DIR.
(DIA.)	(PLF)	(FT)	30 FT*	60 FT*	60 FT*	BRACE	BRACE	BRACE	BRACE	BRACE
2	5.1	8	C1.10	C1.11	C1.12	38B	38C	38C	50A	50B
3	8.4	8	C1.20	C1.21	C1.22	50C	50D	50E	50A	50C
4	13	8	C1.30	C1.32	C1.34	63D	63E	63F	63B	63D
5	18	8	C1.30	C1.32	C1.34	63E	63G	63H	63C	63E
6	23.4	8	C1.40	C1.51	C1.52	75F	88H	88J	63D	63F
8	40.2	8	C1.40	C1.42	C1.44	75J	75L	75M	63E	63H

Fp = 0.25g
Fpv = 0.38g

SOLID (RIGID) BRACING FOR 45° BRACE ANGLE
MAXIMUM BRACE SPACING - OPTION #3

PIPE SIZE	WEIGHT	SUPPORT SPACING	INSTALLATION DETAILS							
			SEISMIC BRACE			HANGER CONNECTION			BRACE CONNECTION	
			TRANS.	LONG.	ALL-DIR.	TRANS.	LONG.	ALL-DIR.	TRANS.	LONG./ALL-DIR.
(DIA.)	(PLF)	(FT)	20 FT*	20 FT*	20 FT*	BRACE	BRACE	BRACE	BRACE	BRACE
2	5.1	8	C1.10	C1.11	C1.12	38B	38B	38B	50A	50A
3	8.4	8	C1.20	C1.21	C1.22	50C	50C	50C	50A	50A
4	13	8	C1.30	C1.32	C1.34	63D	63D	63D	63A	63A
5	18	8	C1.30	C1.32	C1.34	63E	63E	63E	63B	63B
6	23.4	8	C1.40	C1.51	C1.52	75F	88F	88F	63B	63B
8	40.2	8	C1.40	C1.51	C1.52	75H	88H	88J	63D	63D
10	60.8	8	C1.50	C1.51	C1.52	88K	88K	88L	63E	63E

*** - BRACE SPACING SHALL NOT EXCEED THOSE TABULATED IN SECTION S.**

REVIEWED FOR CODE COMPLIANCE
OPM-0043-13
BY: Jeffrey K. Kikumoto
DATE: 06/23/2016
LOCAL JURISDICTION MAY HAVE ADDITIONAL REQUIREMENTS

MASON WEST, INC.
1601 E. Miraloma Ave. Placentia, CA 92870
TEL (714) 630 - 0701, www.masonwest.com

Jiefu "Jeff" Zhang, SE
California SE No. S5270

PAGE
B1.6

INDIVIDUALLY SUSPENDED CAST IRON PIPE

SEISMIC SOLID BRACING INSTALLATION REQUIREMENTS

LATERAL FORCE
Fp = 0.5g (ASD)
VERTICAL FORCE
Fpv = 0.375g (ASD)

Fp = 0.5g
Fpv = 0.38g

SOLID (RIGID) BRACING FOR 45° BRACE ANGLE
MAXIMUM BRACE SPACING - OPTION #1

PIPE SIZE	WEIGHT	SUPPORT SPACING	INSTALLATION DETAILS							
			SEISMIC BRACE			HANGER CONNECTION			BRACE CONNECTION	
			TRANS.	LONG.	ALL-DIR.	TRANS.	LONG.	ALL-DIR.	TRANS.	LONG./ALL-DIR.
(DIA.)	(PLF)	(FT)	30 FT*	60 FT*	60 FT*	BRACE	BRACE	BRACE	BRACE	BRACE
2	5.1	8	C1.20	C1.11	C1.12	50C	38D	38E	50B	50C
3	8.4	8	C1.20	C1.21	C1.22	50D	50F	50G	50C	50E
4	13	8	C1.30	C1.32	C1.34	63E	63G	63J	63D	63F
5	18	8	C1.30	C1.32	C1.34	63G	63J	63K	63E	63G

Fp = 0.5g
Fpv = 0.38g

SOLID (RIGID) BRACING FOR 45° BRACE ANGLE
MAXIMUM BRACE SPACING - OPTION #2

PIPE SIZE	WEIGHT	SUPPORT SPACING	INSTALLATION DETAILS							
			SEISMIC BRACE			HANGER CONNECTION			BRACE CONNECTION	
			TRANS.	LONG.	ALL-DIR.	TRANS.	LONG.	ALL-DIR.	TRANS.	LONG./ALL-DIR.
(DIA.)	(PLF)	(FT)	20 FT*	30 FT*	30 FT*	BRACE	BRACE	BRACE	BRACE	BRACE
2	5.1	8	C1.10	C1.11	C1.12	38B	38C	38C	50A	50B
3	8.4	8	C1.20	C1.21	C1.22	50D	50D	50E	50B	50C
4	13	8	C1.30	C1.32	C1.34	63E	63E	63F	63C	63D
5	18	8	C1.30	C1.32	C1.34	63F	63G	63H	63D	63E
6	23.4	8	C1.40	C1.51	C1.52	75G	88H	88J	63D	63F

Fp = 0.5g
Fpv = 0.38g

SOLID (RIGID) BRACING FOR 45° BRACE ANGLE
MAXIMUM BRACE SPACING - OPTION #3

PIPE SIZE	WEIGHT	SUPPORT SPACING	INSTALLATION DETAILS							
			SEISMIC BRACE			HANGER CONNECTION			BRACE CONNECTION	
			TRANS.	LONG.	ALL-DIR.	TRANS.	LONG.	ALL-DIR.	TRANS.	LONG./ALL-DIR.
(DIA.)	(PLF)	(FT)	10 FT*	20 FT*	20 FT*	BRACE	BRACE	BRACE	BRACE	BRACE
2	5.1	8	C1.10	C1.11	C1.12	38B	38B	38C	50A	50A
3	8.4	8	C1.20	C1.21	C1.22	50C	50D	50D	50A	50B
4	13	8	C1.30	C1.32	C1.34	63D	63E	63E	63A	63C
5	18	8	C1.30	C1.32	C1.34	63E	63F	63G	63B	63D
6	23.4	8	C1.40	C1.51	C1.52	75F	88G	88H	63B	63D
8	40.2	8	C1.40	C1.51	C1.52	75H	88K	88L	63D	63F
10	60.8	8	C1.50	C1.42	C1.44	88K	75M	75M	63E	63H

*** - BRACE SPACING SHALL NOT EXCEED THOSE TABULATED IN SECTION S.**

ACCEPTED FOR CODE COMPLIANCE
OPM-0043-13
Reviewed by: Jeffrey Kikumoto
DATE: 06/23/2016
LOS ANGELES DEPARTMENT OF BUILDING AND SAFETY

MASON WEST, INC.
1601 E. Miraloma Ave. Placentia, CA 92870
TEL (714) 630 - 0701, www.masonwest.com

Jiefu "Jeff" Zhang, SE
California SE No. S5270

PAGE
B1.7

INDIVIDUALLY SUSPENDED CAST IRON PIPE

SEISMIC SOLID BRACING INSTALLATION REQUIREMENTS

LATERAL FORCE
Fp = 1.0g (ASD)
VERTICAL FORCE
Fpv = 0.375g (ASD)

Fp = 1g Fpv = 0.38g			SOLID (RIGID) BRACING FOR 45° BRACE ANGLE MAXIMUM BRACE SPACING - OPTION #1							
PIPE SIZE	WEIGHT	SUPPORT SPACING	INSTALLATION DETAILS							
			SEISMIC BRACE			HANGER CONNECTION			BRACE CONNECTION	
			TRANS.	LONG.	ALL-DIR.	TRANS.	LONG.	ALL-DIR.	TRANS.	LONG./ALL-DIR.
(DIA.)	(PLF)	(FT)	40 FT*	40 FT*	40 FT*	BRACE	BRACE	BRACE	BRACE	BRACE
2	5.1	8	C1.20	C1.11	C1.12	50C	38E	38F	50D	50D
3	8.4	8	C1.40	C1.21	C1.22	75F	50F	50H	63E	50E

Fp = 1g Fpv = 0.38g			SOLID (RIGID) BRACING FOR 45° BRACE ANGLE MAXIMUM BRACE SPACING - OPTION #2							
PIPE SIZE	WEIGHT	SUPPORT SPACING	INSTALLATION DETAILS							
			SEISMIC BRACE			HANGER CONNECTION			BRACE CONNECTION	
			TRANS.	LONG.	ALL-DIR.	TRANS.	LONG.	ALL-DIR.	TRANS.	LONG./ALL-DIR.
(DIA.)	(PLF)	(FT)	30 FT*	30 FT*	30 FT*	BRACE	BRACE	BRACE	BRACE	BRACE
2	5.1	8	C1.20	C1.11	C1.12	50D	38D	38E	50C	50C
3	8.4	8	C1.30	C1.21	C1.22	63F	50F	50G	63E	50E

Fp = 1g Fpv = 0.38g			SOLID (RIGID) BRACING FOR 45° BRACE ANGLE MAXIMUM BRACE SPACING - OPTION #3							
PIPE SIZE	WEIGHT	SUPPORT SPACING	INSTALLATION DETAILS							
			SEISMIC BRACE			HANGER CONNECTION			BRACE CONNECTION	
			TRANS.	LONG.	ALL-DIR.	TRANS.	LONG.	ALL-DIR.	TRANS.	LONG./ALL-DIR.
(DIA.)	(PLF)	(FT)	20 FT*	20 FT*	20 FT*	BRACE	BRACE	BRACE	BRACE	BRACE
2	5.1	8	C1.20	C1.11	C1.12	50C	38C	38D	50B	50B
3	8.4	8	C1.20	C1.21	C1.22	50E	50E	50E	50C	50C
4	13	8	C1.30	C1.32	C1.34	63F	63F	63G	63E	63E
5	18	8	C1.40	C1.32	C1.34	75G	63G	63J	63F	63F

* - BRACE SPACING SHALL NOT EXCEED THOSE TABULATED IN SECTION S.

REVIEWED FOR CODE COMPLIANCE
OSHPD
OPM-0043-13
By Jeffrey Y. Kikumoto
DATE: 06/23/2016
CALIFORNIA BUILDING CODE, 2013

MASON WEST, INC.
1601 E. Miraloma Ave. Placentia, CA 92870
TEL (714) 630 - 0701, www.masonwest.com

Jiefu "Jeff" Zhang, SE
California SE No. S5270

PAGE
B1.8

INDIVIDUALLY SUSPENDED CAST IRON PIPE

SEISMIC CABLE BRACING INSTALLATION REQUIREMENTS

LATERAL FORCE
Fp = 0.25g (ASD)
VERTICAL FORCE
Fpv = 0.375g (ASD)

Fp = 0.25g Fpv = 0.38g			STANDARD CABLE BRACING FOR 45° BRACE ANGLE MAXIMUM BRACE SPACING - OPTION #1					
			INSTALLATION DETAILS					
			BRACE DIRECTION/SPACING			HANGER CONNECTION TYPE	BRACE CONNECTION	
PIPE SIZE	WEIGHT	SUPPORT SPACING	TRANS.	LONG.	ALL-DIR.		TRANS.	LONG./ALL-DIR.
(DIA.)	(PLF)	(FT)	40 FT*	80 FT*	80 FT*		BRACE	BRACE
2	5.1	8	C2.10	C2.11	C2.12	38A	38A	38B
3	8.4	8	C2.20	C2.21	C2.22	50B	50B	50C
4	13	8	C2.30	C2.31	C2.32	63C	50C	50E
5	18	8	C2.30	C2.31	C2.32	63D	50D	50F
6	23.4	8	C2.40	C2.41	C2.42	75E	63D	63G

Fp = 0.25g Fpv = 0.38g			STANDARD CABLE BRACING FOR 45° BRACE ANGLE MAXIMUM BRACE SPACING - OPTION #2					
			INSTALLATION DETAILS					
			BRACE DIRECTION/SPACING			HANGER CONNECTION TYPE	BRACE CONNECTION	
PIPE SIZE	WEIGHT	SUPPORT SPACING	TRANS.	LONG.	ALL-DIR.		TRANS.	LONG./ALL-DIR.
(DIA.)	(PLF)	(FT)	30 FT*	60 FT*	60 FT*		BRACE	BRACE
2	5.1	8	C2.10	C2.11	C2.12	38A	38A	38B
3	8.4	8	C2.20	C2.21	C2.22	50B	50A	50C
4	13	8	C2.30	C2.31	C2.32	63C	50B	50D
5	18	8	C2.30	C2.31	C2.32	63D	50C	50E
6	23.4	8	C2.40	C2.41	C2.42	75E	63D	63F
8	40.2	8	C2.40	C2.41	C2.42	75F	63E	63H

Fp = 0.25g Fpv = 0.38g			STANDARD CABLE BRACING FOR 45° BRACE ANGLE MAXIMUM BRACE SPACING - OPTION #3					
			INSTALLATION DETAILS					
			BRACE DIRECTION/SPACING			HANGER CONNECTION TYPE	BRACE CONNECTION	
PIPE SIZE	WEIGHT	SUPPORT SPACING	TRANS.	LONG.	ALL-DIR.		TRANS.	LONG./ALL-DIR.
(DIA.)	(PLF)	(FT)	20 FT*	20 FT*	20 FT*		BRACE	BRACE
2	5.1	8	C2.10	C2.11	C2.12	38A	38A	38A
3	8.4	8	C2.20	C2.21	C2.22	50B	50A	50A
4	13	8	C2.30	C2.31	C2.32	63C	50A	50A
5	18	8	C2.30	C2.31	C2.32	63D	50B	50B
6	23.4	8	C2.40	C2.41	C2.42	75E	63B	63B
8	40.2	8	C2.40	C2.41	C2.42	75F	63D	63D
10	60.8	8	C2.40	C2.41	C2.42	75H	63E	63E

*** - BRACE SPACING SHALL NOT EXCEED THOSE TABULATED IN SECTION S.**

REVIEWED FOR CODE COMPLIANCE
OSHPD
OPM-0043-13
BY: Jeffrey Y. Kikumoto
DATE: 06/23/2016
OFFICE OF STATEWIDE HEALTH PLANNING AND DEVELOPMENT

MASON WEST, INC.
1601 E. Miraloma Ave. Placentia, CA 92870
TEL (714) 630 - 0701, www.masonwest.com

Jiefu "Jeff" Zhang, SE
California SE No. S5270

PAGE
B1.9

INDIVIDUALLY SUSPENDED CAST IRON PIPE

SEISMIC CABLE BRACING INSTALLATION REQUIREMENTS

LATERAL FORCE
Fp = 0.5g (ASD)
VERTICAL FORCE
Fpv = 0.375g (ASD)

Fp = 0.5g Fpv = 0.38g			STANDARD CABLE BRACING FOR 45° BRACE ANGLE MAXIMUM BRACE SPACING - OPTION #1					
			INSTALLATION DETAILS					
			BRACE DIRECTION/SPACING			HANGER CONNECTION TYPE	BRACE CONNECTION	
PIPE SIZE	WEIGHT	SUPPORT SPACING	TRANS.	LONG.	ALL-DIR.		TRANS.	LONG./ALL-DIR.
(DIA.)	(PLF)	(FT)	30 FT*	60 FT*	60 FT*		BRACE	BRACE
2	5.1	8	C2.20	C2.11	C2.12	50A	50B	38C
3	8.4	8	C2.20	C2.21	C2.22	50B	50C	50E
4	13	8	C2.30	C2.31	C2.32	63C	50D	50F
5	18	8	C2.30	C2.31	C2.32	63D	50E	50G
6	23.4	8	C2.40	C2.41	C2.42	75E	63F	63J

Fp = 0.5g Fpv = 0.38g			STANDARD CABLE BRACING FOR 45° BRACE ANGLE MAXIMUM BRACE SPACING - OPTION #2					
			INSTALLATION DETAILS					
			BRACE DIRECTION/SPACING			HANGER CONNECTION TYPE	BRACE CONNECTION	
PIPE SIZE	WEIGHT	SUPPORT SPACING	TRANS.	LONG.	ALL-DIR.		TRANS.	LONG./ALL-DIR.
(DIA.)	(PLF)	(FT)	20 FT*	30 FT*	30 FT*		BRACE	BRACE
2	5.1	8	C2.10	C2.11	C2.12	38A	38A	38B
3	8.4	8	C2.20	C2.21	C2.22	50B	50B	50C
4	13	8	C2.30	C2.31	C2.32	63C	50C	50D
5	18	8	C2.30	C2.31	C2.32	63D	50D	50E
6	23.4	8	C2.40	C2.41	C2.42	75E	63D	63F

Fp = 0.5g Fpv = 0.38g			STANDARD CABLE BRACING FOR 45° BRACE ANGLE MAXIMUM BRACE SPACING - OPTION #3					
			INSTALLATION DETAILS					
			BRACE DIRECTION/SPACING			HANGER CONNECTION TYPE	BRACE CONNECTION	
PIPE SIZE	WEIGHT	SUPPORT SPACING	TRANS.	LONG.	ALL-DIR.		TRANS.	LONG./ALL-DIR.
(DIA.)	(PLF)	(FT)	10 FT*	20 FT*	20 FT*		BRACE	BRACE
2	5.1	8	C2.10	C2.11	C2.12	38A	38A	38A
3	8.4	8	C2.20	C2.21	C2.22	50B	50A	50B
4	13	8	C2.30	C2.31	C2.32	63C	50A	50C
5	18	8	C2.30	C2.31	C2.32	63D	50B	50D
6	23.4	8	C2.40	C2.41	C2.42	75E	63B	63D
8	40.2	8	C2.40	C2.41	C2.42	75F	63D	63F
10	60.8	8	C2.40	C2.41	C2.42	75H	63E	63E

* - BRACE SPACING SHALL NOT EXCEED THOSE TABULATED IN SECTION S.

REVIEWED FOR CODE COMPLIANCE
OSHPD
OPM-0043-13
BY: Jeffrey Kikumoto
DATE: 06/23/2016
OFFICE OF STATEWIDE HEALTH PLANNING AND DEVELOPMENT

MASON WEST, INC.
1601 E. Miraloma Ave. Placentia, CA 92870
TEL (714) 630 - 0701, www.masonwest.com

Jiefu "Jeff" Zhang, SE
California SE No. S5270

PAGE
B1.10

INDIVIDUALLY SUSPENDED CAST IRON PIPE

SEISMIC CABLE BRACING INSTALLATION REQUIREMENTS

LATERAL FORCE
Fp = 1.0g (ASD)
VERTICAL FORCE
Fpv = 0.375g (ASD)

Fp = 1g Fpv = 0.38g			STANDARD CABLE BRACING FOR 45° BRACE ANGLE MAXIMUM BRACE SPACING - OPTION #1					
			INSTALLATION DETAILS					
			BRACE DIRECTION/SPACING			HANGER CONNECTION TYPE	BRACE CONNECTION	
PIPE SIZE	WEIGHT	SUPPORT SPACING	TRANS.	LONG.	ALL-DIR.		TRANS.	LONG./ALL-DIR.
(DIA.)	(PLF)	(FT)	40 FT*	40 FT*	40 FT*		BRACE	BRACE
2	5.1	8	C2.20	C2.11	C2.12	50A	50D	38D
3	8.4	8	C2.40	C2.21	C2.22	75B	63E	50E

Fp = 1g Fpv = 0.38g			STANDARD CABLE BRACING FOR 45° BRACE ANGLE MAXIMUM BRACE SPACING - OPTION #2					
			INSTALLATION DETAILS					
			BRACE DIRECTION/SPACING			HANGER CONNECTION TYPE	BRACE CONNECTION	
PIPE SIZE	WEIGHT	SUPPORT SPACING	TRANS.	LONG.	ALL-DIR.		TRANS.	LONG./ALL-DIR.
(DIA.)	(PLF)	(FT)	30 FT*	30 FT*	30 FT*		BRACE	BRACE
2	5.1	8	C2.20	C2.11	C2.12	50A	50C	38C
3	8.4	8	C2.30	C2.21	C2.22	63B	50E	50E

Fp = 1g Fpv = 0.38g			STANDARD CABLE BRACING FOR 45° BRACE ANGLE MAXIMUM BRACE SPACING - OPTION #3					
			INSTALLATION DETAILS					
			BRACE DIRECTION/SPACING			HANGER CONNECTION TYPE	BRACE CONNECTION	
PIPE SIZE	WEIGHT	SUPPORT SPACING	TRANS.	LONG.	ALL-DIR.		TRANS.	LONG./ALL-DIR.
(DIA.)	(PLF)	(FT)	20 FT*	20 FT*	20 FT*		BRACE	BRACE
2	5.1	8	C2.20	C2.11	C2.12	50A	50B	38B
3	8.4	8	C2.20	C2.21	C2.22	50B	50C	50C
4	13	8	C2.30	C2.31	C2.32	63C	50E	50E
5	18	8	C2.40	C2.31	C2.32	75D	63F	50F

* - BRACE SPACING SHALL NOT EXCEED THOSE TABULATED IN SECTION S.

REVIEWED FOR CODE COMPLIANCE
OSHPD
BY: Jeffrey Kikumoto
DATE: 06/23/2016
CALIFORNIA BUILDING CODE, 2013

MASON WEST, INC.
1601 E. Miraloma Ave. Placentia, CA 92870
TEL (714) 630 - 0701, www.masonwest.com

Jiefu "Jeff" Zhang, SE
California SE No. S5270

PAGE
B1.11

PIPING/CONDUIT ON TRAPEZE

SEISMIC SOLID BRACING INSTALLATION REQUIREMENTS

LATERAL FORCE
Fp = 0.25g (ASD)
VERTICAL FORCE
Fpv = 0.375g (ASD)

Fp = 0.25g Fpv = 0.375g		SOLID (RIGID) BRACING FOR 45° BRACE ANGLE BRACE SPACING - OPTION #1					
		INSTALLATION DETAILS					
PIPING/CONDUIT SUPPORT AT 10'-0" MAX.		BRACE DIRECTION/SPACING			HANGER ATTACHMENT TYPE		BRACE ATTACHMENT TYPE
		TRANS. 40 FT	LONG. 80 FT	ALL-DIR. 80 FT	TRANS./LONG. BRACE LOCATION	ALL-DIR. BRACE LOCATION	
PIPING/CONDUIT WEIGHT (LBS/FT)	10	F1.10	F1.11	F1.12	38D	38F	50B
	20	F1.10	F1.11	F1.12	38F	38J	50D
	30	F1.10	F1.11	F1.12	38G	38L	50E
	40	F1.20	F1.21	F1.22	50J	50M	50F
	50	F1.20	F1.21	F1.22	50K	50N	50G
	60	F1.30	F1.31	F1.32	63L	63P	63H
	70	F1.33	F1.34	F1.35	63M	63Q	63J
	80	F1.33	F1.34	F1.45	63M	75Q	63J
	90	F1.33	F1.34	F1.45	63N	75Q	63K
	100	F1.33	F1.34	F1.45	63N	75R	63L
	150	F1.50	F1.51	F1.52	75Q	75S	75M
	200	F1.50	F1.51	F1.52	75R	75S	75P
	300	F1.50	F1.51		75S		75Q
	400	F1.70	F1.71		125T		125R
	500	F1.73	F1.74		125T		125S

Fp = 0.25g Fpv = 0.375g		SOLID (RIGID) BRACING FOR 45° BRACE ANGLE BRACE SPACING - OPTION #2					
		INSTALLATION DETAILS					
PIPING/CONDUIT SUPPORT AT 10'-0" MAX.		BRACE DIRECTION/SPACING			HANGER ATTACHMENT TYPE		BRACE ATTACHMENT TYPE
		TRANS. 30 FT	LONG. 60 FT	ALL-DIR. 60 FT	TRANS./LONG. BRACE LOCATION	ALL-DIR. BRACE LOCATION	
PIPING/CONDUIT WEIGHT (LBS/FT)	10	F1.10	F1.11	F1.12	38C	38E	50B
	20	F1.10	F1.11	F1.12	38E	38H	50C
	30	F1.10	F1.11	F1.12	38G	38K	50D
	40	F1.20	F1.21	F1.22	50H	50L	50E
	50	F1.20	F1.21	F1.22	50J	50M	50F
	60	F1.20	F1.21	F1.22	50K	50N	50G
	70	F1.30	F1.31	F1.32	63L	63P	63G
	80	F1.30	F1.31	F1.32	63M	63P	63H
	90	F1.33	F1.34	F1.35	63M	63Q	63H
	100	F1.33	F1.34	F1.45	63N	75Q	63J
	150	F1.50	F1.51	F1.52	75P	75R	75L
	200	F1.50	F1.51	F1.52	75Q	75S	75M
	300	F1.50	F1.51	F1.55	75R	75T	75P
	400	F1.60	F1.61		100S		125Q
	500	F1.60	F1.61		100T		125R

REVIEWED FOR CODE COMPLIANCE
OPM-0043-13
DATE: 06/23/2016
CALIFORNIA BUILDING CODE 2013

MASON WEST, INC.
1601 E. Miraloma Ave. Placentia, CA 92870
TEL (714) 630 - 0701, www.masonwest.com

Jiefu "Jeff" Zhang, SE
California SE No. S5270

PIPING/CONDUIT ON TRAPEZE

SEISMIC SOLID BRACING INSTALLATION REQUIREMENTS

LATERAL FORCE
Fp = 0.25g (ASD)
VERTICAL FORCE
Fpv = 0.375g (ASD)

Fp = 0.25g Fpv = 0.375g		SOLID (RIGID) BRACING FOR 45° BRACE ANGLE BRACE SPACING - OPTION #3					
PIPING/CONDUIT SUPPORT AT 10'-0" MAX.		INSTALLATION DETAILS					
		BRACE DIRECTION/SPACING			HANGER ATTACHMENT TYPE		BRACE ATTACHMENT TYPE
		TRANS. 20 FT	LONG. 40 FT	ALL-DIR. 40 FT	TRANS./LONG. BRACE LOCATION	ALL-DIR. BRACE LOCATION	
PIPING/CONDUIT WEIGHT (LBS/FT)	10	F1.10	F1.11	F1.12	38C	38D	50A
	20	F1.10	F1.11	F1.12	38E	38G	50B
	30	F1.10	F1.11	F1.12	38F	38H	50C
	40	F1.20	F1.21	F1.22	50G	50K	50D
	50	F1.20	F1.21	F1.22	50J	50L	50E
	60	F1.20	F1.21	F1.22	50J	50M	50E
	70	F1.30	F1.31	F1.32	63K	63N	63F
	80	F1.30	F1.31	F1.32	63L	63N	63F
	90	F1.30	F1.31	F1.32	63M	63P	63G
	100	F1.30	F1.31	F1.32	63M	63P	63G
	150	F1.43	F1.44	F1.45	75P	75Q	75J
	200	F1.50	F1.51	F1.52	75Q	75R	75L
	300	F1.50	F1.51	F1.52	75R	75S	75M
	400	F1.60	F1.61	F1.62	100S	100T	125P
	500	F1.60	F1.61		100S		125Q

REVIEWED FOR CODE COMPLIANCE
CALIFORNIA BUILDING CODE, 2013
OSHPD
OPM-0043-13
BY: Jeffrey Y. Kikumoto
DATE: 06/23/2016

MASON WEST, INC.
1601 E. Miraloma Ave. Placentia, CA 92870
TEL (714) 630 - 0701, www.masonwest.com

Jiefu "Jeff" Zhang, SE
California SE No. S5270

PAGE
B1.12.1

PIPING/CONDUIT ON TRAPEZE

SEISMIC SOLID BRACING INSTALLATION REQUIREMENTS

LATERAL FORCE
Fp = 0.5g (ASD)
VERTICAL FORCE
Fpv = 0.375g (ASD)

Fp = 0.5g Fpv = 0.375g		SOLID (RIGID) BRACING FOR 45° BRACE ANGLE BRACE SPACING - OPTION #1					
		INSTALLATION DETAILS					
PIPING/CONDUIT SUPPORT AT 10'-0" MAX.		BRACE DIRECTION/SPACING			HANGER ATTACHMENT TYPE		BRACE ATTACHMENT TYPE
		TRANS. 30 FT	LONG. 60 FT	ALL-DIR. 60 FT	TRANS./LONG. BRACE LOCATION	ALL-DIR. BRACE LOCATION	
PIPING/CONDUIT WEIGHT (LBS/FT)	10	F1.10	F1.11	F1.12	38D	38G	50C
	20	F1.10	F1.11	F1.12	38G	38L	50E
	30	F1.20	F1.21	F1.22	50J	50M	50G
	40	F1.30	F1.31	F1.32	63K	63P	63H
	50	F1.33	F1.34	F1.45	63L	75Q	63J
	60	F1.33	F1.34	F1.45	63M	75Q	63K
	70	F1.33	F1.34	F1.45	63N	75R	63L
	80	F1.50	F1.51	F1.52	75N	75R	75L
	90	F1.50	F1.51	F1.52	75P	75R	75M
	100	F1.50	F1.51	F1.52	75P	75S	75M
	150	F1.50	F1.51	F1.55	75R	75T	75P
	200	F1.50	F1.51	F1.72	75R	125T	75Q
	300	F1.73	F1.74		125S		125R

Fp = 0.5g Fpv = 0.375g		SOLID (RIGID) BRACING FOR 45° BRACE ANGLE BRACE SPACING - OPTION #2					
		INSTALLATION DETAILS					
PIPING/CONDUIT SUPPORT AT 10'-0" MAX.		BRACE DIRECTION/SPACING			HANGER ATTACHMENT TYPE		BRACE ATTACHMENT TYPE
		TRANS. 20 FT	LONG. 40 FT	ALL-DIR. 40 FT	TRANS./LONG. BRACE LOCATION	ALL-DIR. BRACE LOCATION	
PIPING/CONDUIT WEIGHT (LBS/FT)	10	F1.10	F1.11	F1.12	38D	38E	50B
	20	F1.10	F1.11	F1.12	38F	38J	50D
	30	F1.10	F1.11	F1.12	38G	38L	50E
	40	F1.20	F1.21	F1.22	50J	50M	50F
	50	F1.20	F1.21	F1.22	50K	50N	50G
	60	F1.30	F1.31	F1.32	63L	63P	63H
	70	F1.33	F1.34	F1.35	63M	63Q	63J
	80	F1.33	F1.34	F1.45	63M	75Q	63J
	90	F1.33	F1.34	F1.45	63N	75Q	63K
	100	F1.33	F1.34	F1.45	63N	75R	63L
	150	F1.50	F1.51	F1.52	75Q	75S	75M
	200	F1.50	F1.51	F1.52	75R	75S	75P
	300	F1.50	F1.51		75S		75Q
	400	F1.70	F1.71		125T		125R
	500	F1.73	F1.74		125T		125S

OSHPD REVIEWED FOR CODE COMPLIANCE OPM-0043-13 DATE: 06/23/2016 CALIFORNIA BUILDING CODE 2013

MASON WEST, INC.
1601 E. Miraloma Ave. Placentia, CA 92870
TEL (714) 630 - 0701, www.masonwest.com

Jiefu "Jeff" Zhang, SE
California SE No. S5270

PIPING/CONDUIT ON TRAPEZE

SEISMIC SOLID BRACING INSTALLATION REQUIREMENTS

LATERAL FORCE
Fp = 0.5g (ASD)
VERTICAL FORCE
Fpv = 0.375g (ASD)

Fp = 0.5g Fpv = 0.375g		SOLID (RIGID) BRACING FOR 45° BRACE ANGLE BRACE SPACING - OPTION #3					
		INSTALLATION DETAILS					
PIPING/CONDUIT SUPPORT AT 10'-0" MAX.		BRACE DIRECTION/SPACING			HANGER ATTACHMENT TYPE		BRACE ATTACHMENT TYPE
		TRANS. 10 FT	LONG. 20 FT	ALL-DIR. 20 FT	TRANS./LONG. BRACE LOCATION	ALL-DIR. BRACE LOCATION	
PIPING/CONDUIT WEIGHT (LBS/FT)	10	F1.10	F1.11	F1.12	38C	38D	50A
	20	F1.10	F1.11	F1.12	38E	38G	50B
	30	F1.10	F1.11	F1.12	38F	38H	50C
	40	F1.20	F1.21	F1.22	50G	50K	50D
	50	F1.20	F1.21	F1.22	50J	50L	50E
	60	F1.20	F1.21	F1.22	50J	50M	50E
	70	F1.30	F1.31	F1.32	63K	63N	63F
	80	F1.30	F1.31	F1.32	63L	63N	63F
	90	F1.30	F1.31	F1.32	63M	63P	63G
	100	F1.30	F1.31	F1.32	63M	63P	63G
	150	F1.43	F1.44	F1.45	75P	75Q	75J
	200	F1.50	F1.51	F1.52	75Q	75R	75L
	300	F1.50	F1.51	F1.52	75R	75S	75M
	400	F1.60	F1.61	F1.62	100S	100T	125P
	500	F1.60	F1.61		100S		125Q

REVIEWED FOR CODE COMPLIANCE
CALIFORNIA BUILDING CODE, 2013
OSHPD
OPM-0043-13
BY: Jeffrey Y. Kikumoto
DATE: 06/23/2016

MASON WEST, INC.
1601 E. Miraloma Ave. Placentia, CA 92870
TEL (714) 630 - 0701, www.masonwest.com

Jiefu "Jeff" Zhang, SE
California SE No. S5270

PIPING/CONDUIT ON TRAPEZE

SEISMIC SOLID BRACING INSTALLATION REQUIREMENTS

LATERAL FORCE
Fp = 1.0g (ASD)
VERTICAL FORCE
Fpv = 0.375g (ASD)

Fp = 1g Fpv = 0.375g		SOLID (RIGID) BRACING FOR 45° BRACE ANGLE BRACE SPACING - OPTION #1					
		INSTALLATION DETAILS					
PIPING/CONDUIT SUPPORT AT 10'-0" MAX.		BRACE DIRECTION/SPACING			HANGER ATTACHMENT TYPE		BRACE ATTACHMENT TYPE
		TRANS. 20 FT	LONG. 40 FT	ALL-DIR. 40 FT	TRANS./LONG. BRACE LOCATION	ALL-DIR. BRACE LOCATION	
PIPING/CONDUIT WEIGHT (LBS/FT)	10	F1.10	F1.11	F1.12	38E	38H	50D
	20	F1.10	F1.11	F1.22	38H	50M	50F
	30	F1.30	F1.31	F1.32	63K	63N	63H
	40	F1.33	F1.34	F1.45	63L	75Q	63J
	50	F1.33	F1.34	F1.45	63M	75Q	63L
	60	F1.50	F1.51	F1.52	75N	75R	75L
	70	F1.50	F1.51	F1.52	75P	75R	75M
	80	F1.50	F1.51	F1.52	75P	75S	75N
	90	F1.50	F1.51	F1.52	75Q	75S	75N
	100	F1.50	F1.51	F1.52	75Q	75S	75P
	150	F1.50	F1.51	F1.72	75R	125T	75Q
	200	F1.70	F1.71		125S		125R

Fp = 1g Fpv = 0.375g		SOLID (RIGID) BRACING FOR 45° BRACE ANGLE BRACE SPACING - OPTION #2					
		INSTALLATION DETAILS					
PIPING/CONDUIT SUPPORT AT 10'-0" MAX.		BRACE DIRECTION/SPACING			HANGER ATTACHMENT TYPE		BRACE ATTACHMENT TYPE
		TRANS. 15 FT	LONG. 30 FT	ALL-DIR. 30 FT	TRANS./LONG. BRACE LOCATION	ALL-DIR. BRACE LOCATION	
PIPING/CONDUIT WEIGHT (LBS/FT)	10	F1.10	F1.11	F1.12	38D	38G	50C
	20	F1.10	F1.11	F1.12	38G	38L	50E
	30	F1.20	F1.21	F1.22	50J	50M	50G
	40	F1.30	F1.31	F1.32	63K	63P	63H
	50	F1.33	F1.34	F1.45	63L	75Q	63J
	60	F1.33	F1.34	F1.45	63M	75Q	63K
	70	F1.33	F1.34	F1.45	63N	75R	63L
	80	F1.50	F1.51	F1.52	75N	75R	75L
	90	F1.50	F1.51	F1.52	75P	75R	75M
	100	F1.50	F1.51	F1.52	75P	75S	75M
	150	F1.50	F1.51	F1.55	75R	75T	75P
	200	F1.50	F1.51	F1.72	75R	125T	75Q
	300	F1.73	F1.74		125S		125R

REVIEWED FOR CODE COMPLIANCE
OPM-0043-13
DATE: 06/23/2016
BY: Jeffrey Kikumoto
CALIFORNIA BUILDING CODE 2013

MASON WEST, INC.
1601 E. Miraloma Ave. Placentia, CA 92870
TEL (714) 630 - 0701, www.masonwest.com

Jiefu "Jeff" Zhang, SE
California SE No. S5270

PIPING/CONDUIT ON TRAPEZE	SEISMIC SOLID BRACING INSTALLATION REQUIREMENTS	LATERAL FORCE Fp = 1.0g (ASD) VERTICAL FORCE Fpv = 0.375g (ASD)

Fp = 1g Fpv = 0.375g		SOLID (RIGID) BRACING FOR 45° BRACE ANGLE BRACE SPACING - OPTION #3					
		INSTALLATION DETAILS					
PIPING/CONDUIT SUPPORT AT 10'-0" MAX.		BRACE DIRECTION/SPACING			HANGER ATTACHMENT TYPE		BRACE ATTACHMENT TYPE
		TRANS. 10 FT	LONG. 20 FT	ALL-DIR. 20 FT	TRANS./LONG. BRACE LOCATION	ALL-DIR. BRACE LOCATION	
PIPING/CONDUIT WEIGHT (LBS/FT)	10	F1.10	F1.11	F1.12	38D	38F	50B
	20	F1.10	F1.11	F1.12	38F	38J	50D
	30	F1.10	F1.11	F1.12	38G	38L	50E
	40	F1.20	F1.21	F1.22	50J	50M	50F
	50	F1.20	F1.21	F1.22	50K	50N	50G
	60	F1.30	F1.31	F1.32	63L	63P	63H
	70	F1.33	F1.34	F1.35	63M	63Q	63J
	80	F1.33	F1.34	F1.45	63M	75Q	63J
	90	F1.33	F1.34	F1.45	63N	75Q	63K
	100	F1.33	F1.34	F1.45	63N	75R	63L
	150	F1.50	F1.51	F1.52	75Q	75S	75M
	200	F1.50	F1.51	F1.52	75R	75S	75P
	300	F1.50	F1.51		75S		75Q
	400	F1.70	F1.71		125T		125R
	500	F1.73	F1.74		125T		125S

REVIEWED FOR CODE COMPLIANCE
CALIFORNIA BUILDING CODE, 2013
OSHPD
OPM-0043-13
BY: Jeffrey Y. Kikumoto
DATE: 06/23/2016

MASON WEST, INC.
1601 E. Miraloma Ave. Placentia, CA 92870
TEL (714) 630 - 0701, www.masonwest.com

Jiefu "Jeff" Zhang, SE
California SE No. S5270

PIPING/CONDUIT ON TRAPEZE	SEISMIC CABLE BRACING INSTALLATION REQUIREMENTS	LATERAL FORCE Fp = 0.25g (ASD) VERTICAL FORCE Fpv = 0.375g (ASD)

Fp = 0.25g Fpv = 0.375g		STANDARD CABLE BRACING FOR 45° BRACE ANGLE BRACE SPACING - OPTION #1					
PIPING/CONDUIT SUPPORT AT 10'-0" MAX.		INSTALLATION DETAILS					
		BRACE DIRECTION/SPACING			HANGER ATTACHMENT TYPE		BRACE ATTACHMENT TYPE
		TRANS. 40 FT	LONG. 80 FT	ALL-DIR. 80 FT	TRANS./LONG. BRACE LOCATION	ALL-DIR. BRACE LOCATION	
PIPING/CONDUIT WEIGHT (LBS/FT)	10	F2.10	F2.11	F2.12	38B	38B	38B
	20	F2.10	F2.11	F2.12	38D	38D	38D
	30	F2.20	F2.21	F2.22	50E	50E	50E
	40	F2.20	F2.21	F2.22	50F	50F	50F
	50	F2.20	F2.21	F2.22	50G	50G	50G
	60	F2.40	F2.41	F2.42	75G	75G	63H
	70	F2.40	F2.41	F2.42	75H	75H	63J
	80	F2.40	F2.41	F2.42	75J	75J	63J
	90	F2.40	F2.41	F2.42	75J	75J	63K

Fp = 0.25g Fpv = 0.375g		STANDARD CABLE BRACING FOR 45° BRACE ANGLE BRACE SPACING - OPTION #2					
PIPING/CONDUIT SUPPORT AT 10'-0" MAX.		INSTALLATION DETAILS					
		BRACE DIRECTION/SPACING			HANGER ATTACHMENT TYPE		BRACE ATTACHMENT TYPE
		TRANS. 30 FT	LONG. 60 FT	ALL-DIR. 60 FT	TRANS./LONG. BRACE LOCATION	ALL-DIR. BRACE LOCATION	
PIPING/CONDUIT WEIGHT (LBS/FT)	10	F2.10	F2.11	F2.12	38B	38B	38B
	20	F2.10	F2.11	F2.12	38D	38D	38C
	30	F2.10	F2.11	F2.12	38E	38E	38D
	40	F2.20	F2.21	F2.22	50F	50F	50E
	50	F2.20	F2.21	F2.22	50G	50G	50F
	60	F2.20	F2.21	F2.22	50G	50G	50G
	70	F2.30	F2.31	F2.32	63H	63H	50G
	80	F2.40	F2.41	F2.42	75J	75J	63H
	90	F2.40	F2.41	F2.42	75J	75J	63H
	100	F2.40	F2.41	F2.42	75K	75K	63J

Fp = 0.25g Fpv = 0.375g		STANDARD CABLE BRACING FOR 45° BRACE ANGLE BRACE SPACING - OPTION #3					
PIPING/CONDUIT SUPPORT AT 10'-0" MAX.		INSTALLATION DETAILS					
		BRACE DIRECTION/SPACING			HANGER ATTACHMENT TYPE		BRACE ATTACHMENT TYPE
		TRANS. 20 FT	LONG. 40 FT	ALL-DIR. 40 FT	TRANS./LONG. BRACE LOCATION	ALL-DIR. BRACE LOCATION	
PIPING/CONDUIT WEIGHT (LBS/FT)	10	F2.10	F2.11	F2.12	38B	38B	38A
	20	F2.10	F2.11	F2.12	38D	38D	38B
	30	F2.10	F2.11	F2.12	38E	38E	38C
	40	F2.20	F2.21	F2.22	50F	50F	50D
	50	F2.20	F2.21	F2.22	50G	50G	50E
	60	F2.20	F2.21	F2.22	50G	50G	50E
	70	F2.30	F2.31	F2.32	63H	63H	50F
	80	F2.30	F2.31	F2.32	63J	63J	50F
	90	F2.30	F2.31	F2.32	63J	63J	50G
	100	F2.30	F2.31	F2.32	63K	63K	50G
	150	F2.40	F2.41	F2.42	75M	75M	63J

OSHPD
CERTIFIED FOR CODE COMPLIANCE
OPM-0043-13
REVIEWED BY: Jeffrey Kikumoto
DATE: 06/23/2016
CALIFORNIA BUILDING CODE 2013

MASON WEST, INC.
1601 E. Miraloma Ave. Placentia, CA 92870
TEL (714) 630 - 0701, www.masonwest.com

Jiefu "Jeff" Zhang, SE
California SE No. S5270

PIPING/CONDUIT ON TRAPEZE	SEISMIC CABLE BRACING INSTALLATION REQUIREMENTS	LATERAL FORCE Fp = 0.5g (ASD) VERTICAL FORCE Fpv = 0.375g (ASD)

Fp = 0.5g Fpv = 0.375g		STANDARD CABLE BRACING FOR 45° BRACE ANGLE BRACE SPACING - OPTION #1					
		INSTALLATION DETAILS					
PIPING/CONDUIT SUPPORT AT 10'-0" MAX.		BRACE DIRECTION/SPACING			HANGER ATTACHMENT TYPE		BRACE ATTACHMENT TYPE
		TRANS. 30 FT	LONG. 60 FT	ALL-DIR. 60 FT	TRANS./LONG. BRACE LOCATION	ALL-DIR. BRACE LOCATION	
PIPING/CONDUIT WEIGHT (LBS/FT)	10	F2.10	F2.11	F2.12	38B	38B	38C
	20	F2.20	F2.21	F2.22	50D	50D	50E
	30	F2.20	F2.21	F2.22	50E	50E	50G
	40	F2.40	F2.41	F2.42	75F	75F	63H
	50	F2.40	F2.41	F2.42	75G	75G	63J
	60	F2.40	F2.41	F2.42	75G	75G	63K

Fp = 0.5g Fpv = 0.375g		STANDARD CABLE BRACING FOR 45° BRACE ANGLE BRACE SPACING - OPTION #2					
		INSTALLATION DETAILS					
PIPING/CONDUIT SUPPORT AT 10'-0" MAX.		BRACE DIRECTION/SPACING			HANGER ATTACHMENT TYPE		BRACE ATTACHMENT TYPE
		TRANS. 20 FT	LONG. 40 FT	ALL-DIR. 40 FT	TRANS./LONG. BRACE LOCATION	ALL-DIR. BRACE LOCATION	
PIPING/CONDUIT WEIGHT (LBS/FT)	10	F2.10	F2.11	F2.12	38B	38B	38B
	20	F2.10	F2.11	F2.12	38D	38D	38D
	30	F2.20	F2.21	F2.22	50E	50E	50E
	40	F2.20	F2.21	F2.22	50F	50F	50F
	50	F2.20	F2.21	F2.22	50G	50G	50G
	60	F2.40	F2.41	F2.42	75G	75G	63H
	70	F2.40	F2.41	F2.42	75H	75H	63J
	80	F2.40	F2.41	F2.42	75J	75J	63J
	90	F2.40	F2.41	F2.42	75J	75J	63K

Fp = 0.5g Fpv = 0.375g		STANDARD CABLE BRACING FOR 45° BRACE ANGLE BRACE SPACING - OPTION #3					
		INSTALLATION DETAILS					
PIPING/CONDUIT SUPPORT AT 10'-0" MAX.		BRACE DIRECTION/SPACING			HANGER ATTACHMENT TYPE		BRACE ATTACHMENT TYPE
		TRANS. 10 FT	LONG. 20 FT	ALL-DIR. 20 FT	TRANS./LONG. BRACE LOCATION	ALL-DIR. BRACE LOCATION	
PIPING/CONDUIT WEIGHT (LBS/FT)	10	F2.10	F2.11	F2.12	38B	38B	38A
	20	F2.10	F2.11	F2.12	38D	38D	38B
	30	F2.10	F2.11	F2.12	38E	38E	38C
	40	F2.20	F2.21	F2.22	50F	50F	50D
	50	F2.20	F2.21	F2.22	50G	50G	50E
	60	F2.20	F2.21	F2.22	50G	50G	50E
	70	F2.30	F2.31	F2.32	63H	63H	50F
	80	F2.30	F2.31	F2.32	63J	63J	50F
	90	F2.30	F2.31	F2.32	63J	63J	50G
	100	F2.30	F2.31	F2.32	63K	63K	50G
	150	F2.40	F2.41	F2.42	75M	75M	63J

CERTIFIED FOR CODE COMPLIANCE
OSHPD
OPM-0043-13
REVIEWED BY: Jeffrey Kikumoto
DATE: 06/23/2016
CALIFORNIA BUILDING CODE 2013

MASON WEST, INC.
1601 E. Miraloma Ave. Placentia, CA 92870
TEL (714) 630 - 0701, www.masonwest.com

Jiefu "Jeff" Zhang, SE
California SE No. S5270

PAGE
B1.16

PIPING/CONDUIT ON TRAPEZE

SEISMIC CABLE BRACING INSTALLATION REQUIREMENTS

LATERAL FORCE
Fp = 1.0g (ASD)
VERTICAL FORCE
Fpv = 0.375g (ASD)

Fp = 1g Fpv = 0.375g		STANDARD CABLE BRACING FOR 45° BRACE ANGLE BRACE SPACING - OPTION #1					
PIPING/CONDUIT SUPPORT AT 10'-0" MAX.		INSTALLATION DETAILS					
		BRACE DIRECTION/SPACING			HANGER ATTACHMENT TYPE		BRACE ATTACHMENT TYPE
		TRANS. 20 FT	LONG. 40 FT	ALL-DIR. 40 FT	TRANS./LONG. BRACE LOCATION	ALL-DIR. BRACE LOCATION	
PIPING/CONDUIT WEIGHT (LBS/FT)	10	F2.10	F2.11	F2.12	38B	38B	38D
	20	F2.20	F2.21	F2.22	50D	50D	50F
	30	F2.40	F2.41	F2.42	75E	75E	63H
	40	F2.40	F2.41	F2.42	75F	75F	63J

Fp = 1g Fpv = 0.375g		STANDARD CABLE BRACING FOR 45° BRACE ANGLE BRACE SPACING - OPTION #2					
PIPING/CONDUIT SUPPORT AT 10'-0" MAX.		INSTALLATION DETAILS					
		BRACE DIRECTION/SPACING			HANGER ATTACHMENT TYPE		BRACE ATTACHMENT TYPE
		TRANS. 15 FT	LONG. 30 FT	ALL-DIR. 30 FT	TRANS./LONG. BRACE LOCATION	ALL-DIR. BRACE LOCATION	
PIPING/CONDUIT WEIGHT (LBS/FT)	10	F2.10	F2.11	F2.12	38B	38B	38C
	20	F2.20	F2.21	F2.22	50D	50D	50E
	30	F2.20	F2.21	F2.22	50E	50E	50G
	40	F2.40	F2.41	F2.42	75F	75F	63H
	50	F2.40	F2.41	F2.42	75G	75G	63J
	60	F2.40	F2.41	F2.42	75G	75G	63K

OSHPD CERTIFIED FOR CODE COMPLIANCE OPM-0043-13 REVIEWED FOR CODE COMPLIANCE BY Jeffrey Kikumoto DATE: 06/23/2016 CALIFORNIA BUILDING CODE 2013

Fp = 1g Fpv = 0.375g		STANDARD CABLE BRACING FOR 45° BRACE ANGLE BRACE SPACING - OPTION #3					
PIPING/CONDUIT SUPPORT AT 10'-0" MAX.		INSTALLATION DETAILS					
		BRACE DIRECTION/SPACING			HANGER ATTACHMENT TYPE		BRACE ATTACHMENT TYPE
		TRANS. 10 FT	LONG. 20 FT	ALL-DIR. 20 FT	TRANS./LONG. BRACE LOCATION	ALL-DIR. BRACE LOCATION	
PIPING/CONDUIT WEIGHT (LBS/FT)	10	F2.10	F2.11	F2.12	38B	38B	38B
	20	F2.10	F2.11	F2.12	38D	38D	38D
	30	F2.20	F2.21	F2.22	50E	50E	50E
	40	F2.20	F2.21	F2.22	50F	50F	50F
	50	F2.20	F2.21	F2.22	50G	50G	50G
	60	F2.40	F2.41	F2.42	75G	75G	63H
	70	F2.40	F2.41	F2.42	75H	75H	63J
	80	F2.40	F2.41	F2.42	75J	75J	63J
	90	F2.40	F2.41	F2.42	75J	75J	63K

MASON WEST, INC.
1601 E. Miraloma Ave. Placentia, CA 92870
TEL (714) 630 - 0701, www.masonwest.com

Jiefu "Jeff" Zhang, SE
California SE No. S5270

PAGE
B1.17

PIPING/CONDUIT ON TRAPEZE

SEISMIC CABLE X-PATTERN BRACING INSTALLATION REQUIREMENTS

LATERAL FORCE
Fp = 0.25g (ASD)
VERTICAL FORCE
Fpv = 0.375g (ASD)

Fp = 0.25g Fpv = 0.375g		X-PATTERN CABLE BRACING FOR 45° BRACE ANGLE BRACE SPACING - OPTION #1		
		INSTALLATION DETAILS		
PIPING/CONDUIT SUPPORT AT 10'-0" MAX.		BRACE SPACING 40 FT	HANGER ATTACHMENT TYPE	BRACE ATTACHMENT TYPE
PIPING/CONDUIT WEIGHT (LBS/FT)	10	F3.10	38C	38B
	20	F3.10	38E	38D
	30	F3.11	50F	50E
	40	F3.11	50G	50F
	50	F3.11	50H	50G
	60	F3.13	75J	63H
	70	F3.13	75K	63J
	80	F3.13	75L	63J
	90	F3.13	75L	63K

Fp = 0.25g Fpv = 0.375g		X-PATTERN CABLE BRACING FOR 45° BRACE ANGLE BRACE SPACING - OPTION #2		
		INSTALLATION DETAILS		
PIPING/CONDUIT SUPPORT AT 10'-0" MAX.		BRACE SPACING 30 FT	HANGER ATTACHMENT TYPE	BRACE ATTACHMENT TYPE
PIPING/CONDUIT WEIGHT (LBS/FT)	10	F3.10	38C	38B
	20	F3.10	38E	38C
	30	F3.10	38F	38D
	40	F3.11	50G	50E
	50	F3.11	50H	50F
	60	F3.11	50J	50G
	70	F3.12	63K	50G
	80	F3.13	75L	63H
	90	F3.13	75L	63H
	100	F3.13	75M	63J

Fp = 0.25g Fpv = 0.375g		X-PATTERN CABLE BRACING FOR 45° BRACE ANGLE BRACE SPACING - OPTION #3		
		INSTALLATION DETAILS		
PIPING/CONDUIT SUPPORT AT 10'-0" MAX.		BRACE SPACING 20 FT	HANGER ATTACHMENT TYPE	BRACE ATTACHMENT TYPE
PIPING/CONDUIT WEIGHT (LBS/FT)	10	F3.10	38C	38A
	20	F3.10	38E	38B
	30	F3.10	38F	38C
	40	F3.11	50G	50D
	50	F3.11	50H	50E
	60	F3.11	50J	50E
	70	F3.12	63K	50F
	80	F3.12	63L	50F
	90	F3.12	63L	50G
	100	F3.12	63M	50G
	150	F3.13	75P	63J

REVIEWED FOR CODE COMPLIANCE
CALIFORNIA BUILDING CODE
OPM-0043-13
BY: Jeffrey Y. Kikumoto
DATE: 06/23/2016

MASON WEST, INC.
1601 E. Miraloma Ave. Placentia, CA 92870
TEL (714) 630 - 0701, www.masonwest.com

Jiefu "Jeff" Zhang, SE
California SE No. S5270

PAGE
B1.18

PIPING/CONDUIT ON TRAPEZE

SEISMIC CABLE X-PATTERN BRACING INSTALLATION REQUIREMENTS

LATERAL FORCE
Fp = 0.5g (ASD)
VERTICAL FORCE
Fpv = 0.375g (ASD)

Fp = 0.5g Fpv = 0.375g		X-PATTERN CABLE BRACING FOR 45° BRACE ANGLE BRACE SPACING - OPTION #1		
PIPING/CONDUIT SUPPORT AT 10'-0" MAX.		INSTALLATION DETAILS		
		BRACE SPACING 30 FT	HANGER ATTACHMENT TYPE	BRACE ATTACHMENT TYPE
PIPING/CONDUIT WEIGHT (LBS/FT)	10	F3.10	38C	38C
	20	F3.11	50E	50E
	30	F3.11	50F	50G
	40	F3.13	75G	63H
	50	F3.13	75H	63J
	60	F3.13	75J	63K

Fp = 0.5g Fpv = 0.375g		X-PATTERN CABLE BRACING FOR 45° BRACE ANGLE BRACE SPACING - OPTION #2		
PIPING/CONDUIT SUPPORT AT 10'-0" MAX.		INSTALLATION DETAILS		
		BRACE SPACING 20 FT	HANGER ATTACHMENT TYPE	BRACE ATTACHMENT TYPE
PIPING/CONDUIT WEIGHT (LBS/FT)	10	F3.10	38C	38B
	20	F3.10	38E	38D
	30	F3.11	50F	50E
	40	F3.11	50G	50F
	50	F3.11	50H	50G
	60	F3.13	75J	63H
	70	F3.13	75K	63J
	80	F3.13	75L	63J
	90	F3.13	75L	63K

Fp = 0.5g Fpv = 0.375g		X-PATTERN CABLE BRACING FOR 45° BRACE ANGLE BRACE SPACING - OPTION #3		
PIPING/CONDUIT SUPPORT AT 10'-0" MAX.		INSTALLATION DETAILS		
		BRACE SPACING 10 FT	HANGER ATTACHMENT TYPE	BRACE ATTACHMENT TYPE
PIPING/CONDUIT WEIGHT (LBS/FT)	10	F3.10	38C	38A
	20	F3.10	38E	38B
	30	F3.10	38F	38C
	40	F3.11	50G	50D
	50	F3.11	50H	50E
	60	F3.11	50J	50E
	70	F3.12	63K	50F
	80	F3.12	63L	50F
	90	F3.12	63L	50G
	100	F3.12	63M	50G
	150	F3.13	75P	63J

REVIEWED FOR CODE COMPLIANCE
CALIFORNIA BUILDING CODE 2013
OPM-0043-13
BY: Jeffrey Y. Kikumoto
DATE: 06/23/2016

MASON WEST, INC.
1601 E. Miraloma Ave. Placentia, CA 92870
TEL (714) 630 - 0701, www.masonwest.com

Jiefu "Jeff" Zhang, SE
California SE No. S5270

PAGE
B1.19

PIPING/CONDUIT ON TRAPEZE

SEISMIC CABLE X-PATTERN BRACING INSTALLATION REQUIREMENTS

LATERAL FORCE
Fp = 1.0g (ASD)
VERTICAL FORCE
Fpv = 0.375g (ASD)

Fp = 1g Fpv = 0.375g		X-PATTERN CABLE BRACING FOR 45° BRACE ANGLE BRACE SPACING - OPTION #1		
PIPING/CONDUIT SUPPORT AT 10'-0" MAX.		INSTALLATION DETAILS		
		BRACE SPACING 20 FT	HANGER ATTACHMENT TYPE	BRACE ATTACHMENT TYPE
PIPING/CONDUIT WEIGHT (LBS/FT)	10	F3.10	38C	38D
	20	F3.11	50E	50F
	30	F3.13	75F	63H
	40	F3.13	75G	63J

Fp = 1g Fpv = 0.375g		X-PATTERN CABLE BRACING FOR 45° BRACE ANGLE BRACE SPACING - OPTION #2		
PIPING/CONDUIT SUPPORT AT 10'-0" MAX.		INSTALLATION DETAILS		
		BRACE SPACING 15 FT	HANGER ATTACHMENT TYPE	BRACE ATTACHMENT TYPE
PIPING/CONDUIT WEIGHT (LBS/FT)	10	F3.10	38C	38C
	20	F3.11	50E	50E
	30	F3.11	50F	50G
	40	F3.13	75G	63H
	50	F3.13	75H	63J
	60	F3.13	75J	63K

USPrint
OPM-0043-13
REVIEWED FOR CODE COMPLIANCE
BY: Jeffrey Y. Kikumoto
DATE: 06/23/2016
CALIFORNIA BUILDING CODE 2013

Fp = 1g Fpv = 0.375g		X-PATTERN CABLE BRACING FOR 45° BRACE ANGLE BRACE SPACING - OPTION #3		
PIPING/CONDUIT SUPPORT AT 10'-0" MAX.		INSTALLATION DETAILS		
		BRACE SPACING 10 FT	HANGER ATTACHMENT TYPE	BRACE ATTACHMENT TYPE
PIPING/CONDUIT WEIGHT (LBS/FT)	10	F3.10	38C	38B
	20	F3.10	38E	38D
	30	F3.11	50F	50E
	40	F3.11	50G	50F
	50	F3.11	50H	50G
	60	F3.13	75J	63H
	70	F3.13	75K	63J
	80	F3.13	75L	63J
	90	F3.13	75L	63K

MASON WEST, INC.
1601 E. Miraloma Ave. Placentia, CA 92870
TEL (714) 630 - 0701, www.masonwest.com

Jiefu "Jeff" Zhang, SE
California SE No. S5270

PAGE
B1.20

RECTANGULAR DUCT	SEISMIC SOLID BRACING INSTALLATION REQUIREMENTS	LATERAL FORCE Fp = 0.25g (ASD) VERTICAL FORCE Fpv = 0.375g (ASD)

Fp = 0.25g Fpv = 0.375g		SOLID (RIGID) BRACING FOR 45° BRACE ANGLE BRACE SPACING - OPTION #1					
DUCT SUPPORT AT 10'-0" MAX.		INSTALLATION DETAILS					
		BRACE DIRECTION/SPACING			HANGER ATTACHMENT TYPE		BRACE ATTACHMENT TYPE
		TRANS./ 30 FT	LONG./ 60 FT	ALL-DIR./ 60 FT	TRANS./LONG. BRACE LOCATION	ALL-DIR. BRACE LOCATION	
DUCT WEIGHT (LBS/FT)	10	D1.10	D1.11	D1.12	38C	38E	50B
	20	D1.10	D1.11	D1.12	38E	38G	50C
	30	D1.10	D1.11	D1.12	38F	38J	50D
	40	D1.20	D1.21	D1.22	50H	50L	50E
	50	D1.20	D1.21	D1.22	50J	50M	50F
	60	D1.20	D1.21	D1.22	50K	50N	50G
	70	D1.30	D1.31	D1.32	63L	63N	63G
	80	D1.33	D1.34	D1.32	63L	63P	63H
	90	D1.33	D1.34		63M		63H
	100	D1.33	D1.34		63M		63J

Fp = 0.25g Fpv = 0.375g		SOLID (RIGID) BRACING FOR 45° BRACE ANGLE BRACE SPACING - OPTION #2					
DUCT SUPPORT AT 10'-0" MAX.		INSTALLATION DETAILS					
		BRACE DIRECTION/SPACING			HANGER ATTACHMENT TYPE		BRACE ATTACHMENT TYPE
		TRANS./ 20 FT	LONG./ 40 FT	ALL-DIR./ 40 FT	TRANS./LONG. BRACE LOCATION	ALL-DIR. BRACE LOCATION	
DUCT WEIGHT (LBS/FT)	10	D1.10	D1.11	D1.12	38B	38D	50A
	20	D1.10	D1.11	D1.12	38D	38F	50B
	30	D1.10	D1.11	D1.12	38F	38H	50C
	40	D1.20	D1.21	D1.22	50G	50J	50D
	50	D1.20	D1.21	D1.22	50H	50L	50E
	60	D1.20	D1.21	D1.22	50J	50M	50E
	70	D1.30	D1.31	D1.32	63J	63M	63F
	80	D1.30	D1.31	D1.32	63K	63N	63F
	90	D1.30	D1.31	D1.32	63L	63N	63G
	100	D1.30	D1.31	D1.32	63L	63P	63G

APPROVED FOR CODE COMPLIANCE
OPM-0043-13
REVIEWED BY Jeffrey Kikumoto
DATE: 06/23/2016
CALIFORNIA BUILDING CODE, 2013

MASON WEST, INC.
1601 E. Miraloma Ave. Placentia, CA 92870
TEL (714) 630 - 0701, www.masonwest.com

Jiefu "Jeff" Zhang, SE
California SE No. S5270

RECTANGULAR DUCT

SEISMIC SOLID BRACING INSTALLATION REQUIREMENTS

LATERAL FORCE
Fp = 0.5g (ASD)
VERTICAL FORCE
Fpv = 0.375g (ASD)

Fp = 0.5g Fpv = 0.375g		SOLID (RIGID) BRACING FOR 45° BRACE ANGLE BRACE SPACING - OPTION #1					
DUCT SUPPORT AT 10'-0" MAX.		INSTALLATION DETAILS					
		BRACE DIRECTION/SPACING			HANGER ATTACHMENT TYPE		BRACE ATTACHMENT TYPE
		TRANS./ 30 FT	LONG./ 60 FT	ALL-DIR./ 60 FT	TRANS./LONG. BRACE LOCATION	ALL-DIR. BRACE LOCATION	
DUCT WEIGHT (LBS/FT)	10	D1.10	D1.11	D1.12	38D	38G	50C
	20	D1.10	D1.11	D1.12	38F	38K	50E
	30	D1.20	D1.21	D1.22	50H	50M	50G
	40	D1.33	D1.34	D1.32	63K	63N	63H
	50	D1.33	D1.34		63L		63J
	60	D1.33	D1.34		63M		63K
	70	D1.33	D1.34		63M		63L

Fp = 0.5g Fpv = 0.375g		SOLID (RIGID) BRACING FOR 45° BRACE ANGLE BRACE SPACING - OPTION #2					
DUCT SUPPORT AT 10'-0" MAX.		INSTALLATION DETAILS					
		BRACE DIRECTION/SPACING			HANGER ATTACHMENT TYPE		BRACE ATTACHMENT TYPE
		TRANS./ 20 FT	LONG./ 40 FT	ALL-DIR./ 40 FT	TRANS./LONG. BRACE LOCATION	ALL-DIR. BRACE LOCATION	
DUCT WEIGHT (LBS/FT)	10	D1.10	D1.11	D1.12	38C	38F	50B
	20	D1.10	D1.11	D1.12	38E	38J	50D
	30	D1.10	D1.11	D1.12	38G	38L	50E
	40	D1.20	D1.21	D1.22	50H	50M	50F
	50	D1.20	D1.21	D1.22	50J	50N	50G
	60	D1.33	D1.34	D1.32	63L	63P	63H
	70	D1.33	D1.34	D1.35	63L	63P	63J
	80	D1.33	D1.34		63M	#N/A	63J
	90	D1.33	D1.34		63M	#N/A	63K
	100	D1.33	D1.34		63N	#N/A	63L

Fp = 0.5g Fpv = 0.375g		SOLID (RIGID) BRACING FOR 45° BRACE ANGLE BRACE SPACING - OPTION #3					
DUCT SUPPORT AT 10'-0" MAX.		INSTALLATION DETAILS					
		BRACE DIRECTION/SPACING			HANGER ATTACHMENT TYPE		BRACE ATTACHMENT TYPE
		TRANS./ 10 FT	LONG./ 20 FT	ALL-DIR./ 20 FT	TRANS./LONG. BRACE LOCATION	ALL-DIR. BRACE LOCATION	
DUCT WEIGHT (LBS/FT)	10	D1.10	D1.11	D1.12	38B	38D	50A
	20	D1.10	D1.11	D1.12	38D	38F	50B
	30	D1.10	D1.11	D1.12	38F	38H	50C
	40	D1.20	D1.21	D1.22	50G	50J	50D
	50	D1.20	D1.21	D1.22	50H	50L	50E
	60	D1.20	D1.21	D1.22	50J	50M	50E
	70	D1.30	D1.31	D1.32	63J	63M	63F
	80	D1.30	D1.31	D1.32	63K	63N	63F
	90	D1.30	D1.31	D1.32	63L	63N	63G
	100	D1.30	D1.31	D1.32	63L	63P	63G

REVIEWED FOR CODE COMPLIANCE
OPM-0043-13
REVIEWED BY Jeffrey Kikumoto
DATE: 06/23/2016
CALIFORNIA BUILDING CODE 2013

MASON WEST, INC.
1601 E. Miraloma Ave. Placentia, CA 92870
TEL (714) 630 - 0701, www.masonwest.com

Jiefu "Jeff" Zhang, SE
California SE No. S5270

RECTANGULAR DUCT

SEISMIC SOLID BRACING INSTALLATION REQUIREMENTS

LATERAL FORCE
Fp = 1.0g (ASD)
VERTICAL FORCE
Fpv = 0.375g (ASD)

Fp = 1g Fpv = 0.375g		SOLID (RIGID) BRACING FOR 45° BRACE ANGLE BRACE SPACING - OPTION #1					
DUCT SUPPORT AT 10'-0" MAX.		INSTALLATION DETAILS					
		BRACE DIRECTION/SPACING			HANGER ATTACHMENT TYPE		BRACE ATTACHMENT TYPE
		TRANS./ 30 FT	LONG./ 60 FT	ALL-DIR./ 60 FT	TRANS./LONG. BRACE LOCATION	ALL-DIR. BRACE LOCATION	
DUCT WEIGHT (LBS/FT)	10	D1.10	D1.11	D1.12	38F	38K	50E
	20	D1.33	D1.34	D1.32	63J	63N	63H
	30	D1.33	D1.34		63L		63K

Fp = 1g Fpv = 0.375g		SOLID (RIGID) BRACING FOR 45° BRACE ANGLE BRACE SPACING - OPTION #2					
DUCT SUPPORT AT 10'-0" MAX.		INSTALLATION DETAILS					
		BRACE DIRECTION/SPACING			HANGER ATTACHMENT TYPE		BRACE ATTACHMENT TYPE
		TRANS./ 20 FT	LONG./ 40 FT	ALL-DIR./ 25 FT	TRANS./LONG. BRACE LOCATION	ALL-DIR. BRACE LOCATION	
DUCT WEIGHT (LBS/FT)	10	D1.10	D1.11	D1.12	38E	38F	50D
	20	D1.10	D1.11	D1.12	38G	38J	50F
	30	D1.33	D1.34	D1.22	63J	50M	63H
	40	D1.33	D1.34	D1.22	63L	50N	63J
	50	D1.33	D1.34	D1.32	63M	63P	63L

OSHPD PREAPPROVED
OPM-0043-13
BY: Jeffrey Y. Kikumoto
DATE: 06/23/2016
OSHPD REVIEWED FOR CODE COMPLIANCE
CALIFORNIA BUILDING CODE

Fp = 1g Fpv = 0.375g		SOLID (RIGID) BRACING FOR 45° BRACE ANGLE BRACE SPACING - OPTION #3					
DUCT SUPPORT AT 10'-0" MAX.		INSTALLATION DETAILS					
		BRACE DIRECTION/SPACING			HANGER ATTACHMENT TYPE		BRACE ATTACHMENT TYPE
		TRANS./ 10 FT	LONG./ 20 FT	ALL-DIR./ 15 FT	TRANS./LONG. BRACE LOCATION	ALL-DIR. BRACE LOCATION	
DUCT WEIGHT (LBS/FT)	10	D1.10	D1.11	D1.12	38C	38E	50B
	20	D1.10	D1.11	D1.12	38E	38G	50D
	30	D1.10	D1.11	D1.12	38G	38J	50E
	40	D1.20	D1.21	D1.22	50H	50L	50F
	50	D1.20	D1.21	D1.22	50J	50M	50G
	60	D1.33	D1.34	D1.22	63L	50N	63H
	70	D1.33	D1.34	D1.32	63L	63N	63J
	80	D1.33	D1.34	D1.32	63M	63P	63J
	90	D1.33	D1.34	D1.35	63M	63Q	63K
	100	D1.33	D1.34		63N		63L

MASON WEST, INC.
1601 E. Miraloma Ave. Placentia, CA 92870
TEL (714) 630 - 0701, www.masonwest.com

Jiefu "Jeff" Zhang, SE
California SE No. S5270

PAGE
B2.2

RECTANGULAR DUCT	SEISMIC CABLE BRACING INSTALLATION REQUIREMENTS	LATERAL FORCE Fp = 0.25g (ASD) VERTICAL FORCE Fpv = 0.375g (ASD)

Fp = 0.25g Fpv = 0.375g		STANDARD CABLE BRACING FOR 45° BRACE ANGLE BRACE SPACING - OPTION #1					
DUCT SUPPORT AT 10'-0" MAX.		INSTALLATION DETAILS					
		BRACE DIRECTION/SPACING			HANGER ATTACHMENT TYPE		BRACE ATTACHMENT TYPE
		TRANS./ 30 FT	LONG./ 60 FT	ALL-DIR./ 60 FT	TRANS./LONG. BRACE LOCATION	ALL-DIR. BRACE LOCATION	
DUCT WEIGHT (LBS/FT)	10	D4.10	D4.11	D4.12	38A	38A	38B
	20	D4.10	D4.11	D4.12	38C	38C	38C
	30	D4.10	D4.11	D4.12	38D	38D	38D
	40	D4.20	D4.21	D4.22	50E	50E	50E
	50	D4.20	D4.21	D4.22	50E	50E	50F
	60	D4.20	D4.21	D4.22	50F	50F	50G
	70	D4.30	D4.31	D4.32	63G	63G	50G

Fp = 0.25g Fpv = 0.375g		STANDARD CABLE BRACING FOR 45° BRACE ANGLE BRACE SPACING - OPTION #2					
DUCT SUPPORT AT 10'-0" MAX.		INSTALLATION DETAILS					
		BRACE DIRECTION/SPACING			HANGER ATTACHMENT TYPE		BRACE ATTACHMENT TYPE
		TRANS./ 20 FT	LONG./ 40 FT	ALL-DIR./ 40 FT	TRANS./LONG. BRACE LOCATION	ALL-DIR. BRACE LOCATION	
DUCT WEIGHT (LBS/FT)	10	D4.10	D4.11	D4.12	38A	38A	38A
	20	D4.10	D4.11	D4.12	38C	38C	38B
	30	D4.10	D4.11	D4.12	38D	38D	38C
	40	D4.20	D4.21	D4.22	50E	50E	50D
	50	D4.20	D4.21	D4.22	50E	50E	50E
	60	D4.20	D4.21	D4.22	50F	50F	50E
	70	D4.30	D4.31	D4.32	63G	63G	50F
	80	D4.30	D4.31	D4.32	63G	63G	50F
	90	D4.30	D4.31	D4.32	63H	63H	50G
	100	D4.30	D4.31	D4.32	63H	63H	50G

APPROVED FOR CODE COMPLIANCE
OPM-0043-13
REVIEWED BY Jeffrey Kikumoto
DATE: 06/23/2016
CALIFORNIA BUILDING CODE, 2013

MASON WEST, INC.
1601 E. Miraloma Ave. Placentia, CA 92870
TEL (714) 630 - 0701, www.masonwest.com

Jiefu "Jeff" Zhang, SE
California SE No. S5270

RECTANGULAR DUCT	SEISMIC CABLE BRACING INSTALLATION REQUIREMENTS	LATERAL FORCE Fp = 0.5g (ASD) VERTICAL FORCE Fpv = 0.375g (ASD)

Fp = 0.5g Fpv = 0.375g		STANDARD CABLE BRACING FOR 45° BRACE ANGLE BRACE SPACING - OPTION #1					
DUCT SUPPORT AT 10'-0" MAX.		INSTALLATION DETAILS					
		BRACE DIRECTION/SPACING			HANGER ATTACHMENT TYPE		BRACE ATTACHMENT TYPE
		TRANS./ 30 FT	LONG./ 60 FT	ALL-DIR./ 60 FT	TRANS./LONG. BRACE LOCATION	ALL-DIR. BRACE LOCATION	
DUCT WEIGHT (LBS/FT)	10	D4.10	D4.11	D4.12	38A	38A	38C
	20	D4.20	D4.21	D4.22	50C	50C	50E
	30	D4.20	D4.21	D4.22	50D	50D	50G

Fp = 0.5g Fpv = 0.375g		STANDARD CABLE BRACING FOR 45° BRACE ANGLE BRACE SPACING - OPTION #2					
DUCT SUPPORT AT 10'-0" MAX.		INSTALLATION DETAILS					
		BRACE DIRECTION/SPACING			HANGER ATTACHMENT TYPE		BRACE ATTACHMENT TYPE
		TRANS./ 20 FT	LONG./ 40 FT	ALL-DIR./ 40 FT	TRANS./LONG. BRACE LOCATION	ALL-DIR. BRACE LOCATION	
DUCT WEIGHT (LBS/FT)	10	D4.10	D4.11	D4.12	38A	38A	38B
	20	D4.10	D4.11	D4.12	38C	38C	38D
	30	D4.20	D4.21	D4.22	50D	50D	50E
	40	D4.20	D4.21	D4.22	50E	50E	50F
	50	D4.20	D4.21	D4.22	50E	50E	50G
	60						
	70						
	80						
	90						
	100						

Fp = 0.5g Fpv = 0.375g		STANDARD CABLE BRACING FOR 45° BRACE ANGLE BRACE SPACING - OPTION #3					
DUCT SUPPORT AT 10'-0" MAX.		INSTALLATION DETAILS					
		BRACE DIRECTION/SPACING			HANGER ATTACHMENT TYPE		BRACE ATTACHMENT TYPE
		TRANS./ 10 FT	LONG./ 20 FT	ALL-DIR./ 20 FT	TRANS./LONG. BRACE LOCATION	ALL-DIR. BRACE LOCATION	
DUCT WEIGHT (LBS/FT)	10	D4.10	D4.11	D4.12	38A	38A	38A
	20	D4.10	D4.11	D4.12	38C	38C	38B
	30	D4.10	D4.11	D4.12	38D	38D	38C
	40	D4.20	D4.21	D4.22	50E	50E	50D
	50	D4.20	D4.21	D4.22	50E	50E	50E
	60	D4.20	D4.21	D4.22	50F	50F	50E
	70	D4.30	D4.31	D4.32	63G	63G	50F
	80	D4.30	D4.31	D4.32	63G	63G	50F
	90	D4.30	D4.31	D4.32	63H	63H	50G
	100	D4.30	D4.31	D4.32	63H	63H	50G

REVIEWED FOR CODE COMPLIANCE
OPM-0043-13
REVIEWED BY Jeffrey Kikumoto
DATE: 06/23/2016
CALIFORNIA BUILDING CODE 2013

MASON WEST, INC.
1601 E. Miraloma Ave. Placentia, CA 92870
TEL (714) 630 - 0701, www.masonwest.com

Jiefu "Jeff" Zhang, SE
California SE No. S5270

RECTANGULAR DUCT	SEISMIC CABLE BRACING INSTALLATION REQUIREMENTS	LATERAL FORCE Fp = 1.0g (ASD) VERTICAL FORCE Fpv = 0.375g (ASD)

Fp = 1g Fpv = 0.375g		STANDARD CABLE BRACING FOR 45° BRACE ANGLE BRACE SPACING - OPTION #1					
DUCT SUPPORT AT 10'-0" MAX.		INSTALLATION DETAILS					
		BRACE DIRECTION/SPACING			HANGER ATTACHMENT TYPE		BRACE ATTACHMENT TYPE
		TRANS./ 20 FT	LONG./ 40 FT	ALL-DIR./ 40 FT	TRANS./LONG. BRACE LOCATION	ALL-DIR. BRACE LOCATION	
DUCT WEIGHT (LBS/FT)	10	D4.10	D4.11	D4.12	38A	38A	38D
	20	D4.20	D4.21	D4.22	50C	50C	50F

Fp = 1g Fpv = 0.375g		STANDARD CABLE BRACING FOR 45° BRACE ANGLE BRACE SPACING - OPTION #2					
DUCT SUPPORT AT 10'-0" MAX.		INSTALLATION DETAILS					
		BRACE DIRECTION/SPACING			HANGER ATTACHMENT TYPE		BRACE ATTACHMENT TYPE
		TRANS./ 16 FT	LONG./ 32 FT	ALL-DIR./ 32 FT	TRANS./LONG. BRACE LOCATION	ALL-DIR. BRACE LOCATION	
DUCT WEIGHT (LBS/FT)	10	D4.10	D4.11	D4.12	38A	38A	38C
	20	D4.20	D4.21	D4.22	50C	50C	50E
	30	D4.20	D4.21	D4.22	50D	50D	50G

REVIEWED FOR CODE COMPLIANCE
OPM-0043-13
BY: Jeffrey Y. Kikumoto
DATE: 06/23/2016
CALIFORNIA BUILDING CODE 2013

Fp = 1g Fpv = 0.375g		STANDARD CABLE BRACING FOR 45° BRACE ANGLE BRACE SPACING - OPTION #3					
DUCT SUPPORT AT 10'-0" MAX.		INSTALLATION DETAILS					
		BRACE DIRECTION/SPACING			HANGER ATTACHMENT TYPE		BRACE ATTACHMENT TYPE
		TRANS./ 8 FT	LONG./ 16 FT	ALL-DIR./ 16 FT	TRANS./LONG. BRACE LOCATION	ALL-DIR. BRACE LOCATION	
DUCT WEIGHT (LBS/FT)	10	D4.10	D4.11	D4.12	38A	38A	38B
	20	D4.10	D4.11	D4.12	38C	38C	38C
	30	D4.10	D4.11	D4.12	38D	38D	38D
	40	D4.20	D4.21	D4.22	50E	50E	50E
	50	D4.20	D4.21	D4.22	50E	50E	50F
	60	D4.20	D4.21	D4.22	50F	50F	50G

MASON WEST, INC.
1601 E. Miraloma Ave. Placentia, CA 92870
TEL (714) 630 - 0701, www.masonwest.com

Jiefu "Jeff" Zhang, SE
California SE No. S5270

PAGE
B2.5

RECTANGULAR DUCT

SEISMIC CABLE X-PATTERN BRACING INSTALLATION REQUIREMENTS

LATERAL FORCE
Fp = 0.25g (ASD)
VERTICAL FORCE
Fpv = 0.375g (ASD)

Fp = 0.25g Fpv = 0.375g		X-PATTERN CABLE BRACING FOR 45° BRACE ANGLE BRACE SPACING - OPTION #1		
DUCT SUPPORT AT 10'-0" MAX.		INSTALLATION DETAILS		
		BRACE SPACING 30 FT	HANGER ATTACHMENT TYPE	BRACE ATTACHMENT TYPE
DUCT WEIGHT (LBS/FT)	10	D5.10	38A	38B
	20	D5.10	38C	38C
	30	D5.10	38D	38D
	40	D5.11	50E	50E
	50	D5.11	50E	50F
	60	D5.11	50F	50G
	70	D5.12	63G	50G

Fp = 0.25g Fpv = 0.375g		X-PATTERN CABLE BRACING FOR 45° BRACE ANGLE BRACE SPACING - OPTION #2		
DUCT SUPPORT AT 10'-0" MAX.		INSTALLATION DETAILS		
		BRACE SPACING 30 FT	HANGER ATTACHMENT TYPE	BRACE ATTACHMENT TYPE
DUCT WEIGHT (LBS/FT)	10	D5.10	38A	38B
	20	D5.10	38C	38C
	30	D5.10	38D	38D
	40	D5.11	50E	50E
	50	D5.11	50E	50F
	60	D5.11	50F	50G
	70	D5.12	63G	50G

USPrac
OPM-0043-13
BY: Jeffrey Y. Kikumoto
DATE: 06/23/2016
APPROVED FOR CODE COMPLIANCE
CALIFORNIA BUILDING CODE, 2013

MASON WEST, INC.
1601 E. Miraloma Ave. Placentia, CA 92870
TEL (714) 630 - 0701, www.masonwest.com

Jiefu "Jeff" Zhang, SE
California SE No. S5270

PAGE
B2.6

RECTANGULAR DUCT	SEISMIC CABLE X-PATTERN BRACING INSTALLATION REQUIREMENTS	LATERAL FORCE Fp = 0.5g (ASD) VERTICAL FORCE Fpv = 0.375g (ASD)

Fp = 0.5g Fpv = 0.375g		X-PATTERN CABLE BRACING FOR 45° BRACE ANGLE BRACE SPACING - OPTION #1		
DUCT SUPPORT AT 10'-0" MAX.		INSTALLATION DETAILS		
		BRACE SPACING 30 FT	HANGER ATTACHMENT TYPE	BRACE ATTACHMENT TYPE
DUCT WEIGHT (LBS/FT)	10	D5.10	38A	38C
	20	D5.11	50C	50E
	30	D5.11	50D	50G

Fp = 0.5g Fpv = 0.375g		X-PATTERN CABLE BRACING FOR 45° BRACE ANGLE BRACE SPACING - OPTION #2		
DUCT SUPPORT AT 10'-0" MAX.		INSTALLATION DETAILS		
		BRACE SPACING 20 FT	HANGER ATTACHMENT TYPE	BRACE ATTACHMENT TYPE
DUCT WEIGHT (LBS/FT)	10	D5.10	38A	38B
	20	D5.10	38C	38D
	30	D5.11	50D	50E
	40	D5.11	50E	50F
	50	D5.11	50E	50G

Fp = 0.5g Fpv = 0.375g		X-PATTERN CABLE BRACING FOR 45° BRACE ANGLE BRACE SPACING - OPTION #3		
DUCT SUPPORT AT 10'-0" MAX.		INSTALLATION DETAILS		
		BRACE SPACING 10 FT	HANGER ATTACHMENT TYPE	BRACE ATTACHMENT TYPE
DUCT WEIGHT (LBS/FT)	10	D5.10	38A	38A
	20	D5.10	38C	38B
	30	D5.10	38D	38C
	40	D5.11	50E	50D
	50	D5.11	50E	50E
	60	D5.11	50F	50E
	70	D5.12	63G	50F
	80	D5.12	63G	50F
	90	D5.12	63H	50G
	100	D5.12	63H	50G

OSHPD PREAPPROVED FOR CODE COMPLIANCE
OPM-0043-13
BY: Jeffrey Y. Kikumoto
DATE: 06/23/2016
CALIFORNIA BUILDING CODE 2013

MASON WEST, INC.
1601 E. Miraloma Ave. Placentia, CA 92870
TEL (714) 630 - 0701, www.masonwest.com

Jiefu "Jeff" Zhang, SE
California SE No. S5270

PAGE
B2.7

RECTANGULAR DUCT

SEISMIC CABLE X-PATTERN BRACING INSTALLATION REQUIREMENTS

LATERAL FORCE
Fp = 1.0g (ASD)
VERTICAL FORCE
Fpv = 0.375g (ASD)

Fp = 1g Fpv = 0.375g		X-PATTERN CABLE BRACING FOR 45° BRACE ANGLE BRACE SPACING - OPTION #1		
DUCT SUPPORT AT 10'-0" MAX.		INSTALLATION DETAILS		
		BRACE SPACING 30 FT	HANGER ATTACHMENT TYPE	BRACE ATTACHMENT TYPE
DUCT WEIGHT (LBS/FT)	10	D5.11	50A	50E

Fp = 1g Fpv = 0.375g		X-PATTERN CABLE BRACING FOR 45° BRACE ANGLE BRACE SPACING - OPTION #2		
DUCT SUPPORT AT 10'-0" MAX.		INSTALLATION DETAILS		
		BRACE SPACING 20 FT	HANGER ATTACHMENT TYPE	BRACE ATTACHMENT TYPE
DUCT WEIGHT (LBS/FT)	10	D5.10	38A	38D
	20	D5.11	50C	50F

OPM-0043-13
REVIEWED FOR CODE COMPLIANCE
BY: Jeffrey Y. Kikumoto
DATE: 06/23/2016
CALIFORNIA BUILDING CODE 2013

Fp = 1g Fpv = 0.375g		X-PATTERN CABLE BRACING FOR 45° BRACE ANGLE BRACE SPACING - OPTION #3		
DUCT SUPPORT AT 10'-0" MAX.		INSTALLATION DETAILS		
		BRACE SPACING 15 FT	HANGER ATTACHMENT TYPE	BRACE ATTACHMENT TYPE
DUCT WEIGHT (LBS/FT)	10	D5.10	38A	38C
	20	D5.11	50C	50E
	30	D5.11	50D	50G

MASON WEST, INC.
1601 E. Miraloma Ave. Placentia, CA 92870
TEL (714) 630 - 0701, www.masonwest.com

Jiefu "Jeff" Zhang, SE
California SE No. S5270

PAGE
B2.8

ROUND
DUCT

SEISMIC SOLID BRACING INSTALLATION REQUIREMENTS

LATERAL FORCE
Fp = 0.25g (ASD)
VERTICAL FORCE
Fpv = 0.375g (ASD)

Fp = 0.25g Fpv = 0.375g		SOLID (RIGID) BRACING FOR 45° BRACE ANGLE BRACE SPACING - OPTION #1					
DUCT SUPPORT AT 10'-0" MAX.		INSTALLATION DETAILS					
		BRACE DIRECTION/SPACING			HANGER ATTACHMENT TYPE		BRACE ATTACHMENT TYPE
		TRANS./ 30 FT	LONG./ 60 FT	ALL-DIR./ 60 FT	TRANS./LONG. BRACE LOCATION	ALL-DIR. BRACE LOCATION	
DUCT WEIGHT (LBS/FT)	10	D2.10	D2.11	D2.12	38C	38E	50B
	20	D2.10	D2.11	D2.12	38E	38G	50C
	30	D2.10	D2.11	D2.12	38F	38J	50D
	40	D2.20	D2.21	D2.22	50H	50L	50E
	50	D2.20	D2.21	D2.22	50J	50M	50F
	60	D2.20	D2.21	D2.22	50K	50N	50G

Fp = 0.25g Fpv = 0.375g		SOLID (RIGID) BRACING FOR 45° BRACE ANGLE BRACE SPACING - OPTION #2					
DUCT SUPPORT AT 10'-0" MAX.		INSTALLATION DETAILS					
		BRACE DIRECTION/SPACING			HANGER ATTACHMENT TYPE		BRACE ATTACHMENT TYPE
		TRANS./ 30 FT	LONG./ 60 FT	ALL-DIR./ 60 FT	TRANS./LONG. BRACE LOCATION	ALL-DIR. BRACE LOCATION	
DUCT WEIGHT (LBS/FT)	10	D2.10	D2.11	D2.12	38C	38E	50B
	20	D2.10	D2.11	D2.12	38E	38G	50C
	30	D2.10	D2.11	D2.12	38F	38J	50D
	40	D2.20	D2.21	D2.22	50H	50L	50E
	50	D2.20	D2.21	D2.22	50J	50M	50F
	60	D2.20	D2.21	D2.22	50K	50N	50G

REVIEWED FOR CODE COMPLIANCE OPM 0043-13 BY: Jeffrey Y. Kikumoto DATE: 06/23/2016 OSHPD CALIFORNIA BUILDING CODE

Fp = 0.25g Fpv = 0.375g		SOLID (RIGID) BRACING FOR 45° BRACE ANGLE BRACE SPACING - OPTION #3					
DUCT SUPPORT AT 10'-0" MAX.		INSTALLATION DETAILS					
		BRACE DIRECTION/SPACING			HANGER ATTACHMENT TYPE		BRACE ATTACHMENT TYPE
		TRANS./ 20 FT	LONG./ 40 FT	ALL-DIR./ 40 FT	TRANS./LONG. BRACE LOCATION	ALL-DIR. BRACE LOCATION	
DUCT WEIGHT (LBS/FT)	10	D2.10	D2.11	D2.12	38B	38D	50A
	20	D2.10	D2.11	D2.12	38D	38F	50B
	30	D2.10	D2.11	D2.12	38F	38H	50C
	40	D2.20	D2.21	D2.22	50G	50J	50D
	50	D2.20	D2.21	D2.22	50H	50L	50E
	60	D2.20	D2.21	D2.22	50J	50M	50E

MASON WEST, INC.
1601 E. Miraloma Ave. Placentia, CA 92870
TEL (714) 630 - 0701, www.masonwest.com

Jiefu "Jeff" Zhang, SE
California SE No. S5270

PAGE
B3.0

ROUND DUCT	SEISMIC SOLID BRACING INSTALLATION REQUIREMENTS	LATERAL FORCE Fp = 0.5g (ASD) VERTICAL FORCE Fpv = 0.375g (ASD)

Fp = 0.5g Fpv = 0.375g		SOLID (RIGID) BRACING FOR 45° BRACE ANGLE BRACE SPACING - OPTION #1					
DUCT SUPPORT AT 10'-0" MAX.		INSTALLATION DETAILS					
		BRACE DIRECTION/SPACING			HANGER ATTACHMENT TYPE		BRACE ATTACHMENT TYPE
		TRANS./ 30 FT	LONG./ 60 FT	ALL-DIR./ 60 FT	TRANS./LONG. BRACE LOCATION	ALL-DIR. BRACE LOCATION	
DUCT WEIGHT (LBS/FT)	10	D2.10	D2.11	D2.12	38D	38G	50C
	20	D2.10	D2.11	D2.12	38F	38K	50E
	30	D2.20	D2.21	D2.22	50H	50M	50G
	40	D2.30	D2.31	D2.32	63K	63N	63H
	50	D2.30	D2.31	D2.32	63L	63P	63J
	60	D2.30	D2.31		63M		63K

Fp = 0.5g Fpv = 0.375g		SOLID (RIGID) BRACING FOR 45° BRACE ANGLE BRACE SPACING - OPTION #2					
DUCT SUPPORT AT 10'-0" MAX.		INSTALLATION DETAILS					
		BRACE DIRECTION/SPACING			HANGER ATTACHMENT TYPE		BRACE ATTACHMENT TYPE
		TRANS./ 20 FT	LONG./ 40 FT	ALL-DIR./ 40 FT	TRANS./LONG. BRACE LOCATION	ALL-DIR. BRACE LOCATION	
DUCT WEIGHT (LBS/FT)	10	D2.10	D2.11	D2.12	38C	38F	50B
	20	D2.10	D2.11	D2.12	38E	38J	50D
	30	D2.10	D2.11	D2.12	38G	38L	50E
	40	D2.20	D2.21	D2.22	50H	50M	50F
	50	D2.20	D2.21	D2.22	50J	50N	50G
	60	D2.30	D2.31	D2.32	63L	63P	63H

Fp = 0.5g Fpv = 0.375g		SOLID (RIGID) BRACING FOR 45° BRACE ANGLE BRACE SPACING - OPTION #3					
DUCT SUPPORT AT 10'-0" MAX.		INSTALLATION DETAILS					
		BRACE DIRECTION/SPACING			HANGER ATTACHMENT TYPE		BRACE ATTACHMENT TYPE
		TRANS./ 10 FT	LONG./ 20 FT	ALL-DIR./ 20 FT	TRANS./LONG. BRACE LOCATION	ALL-DIR. BRACE LOCATION	
DUCT WEIGHT (LBS/FT)	10	D2.10	D2.11	D2.12	38B	38D	50A
	20	D2.10	D2.11	D2.12	38D	38F	50B
	30	D2.10	D2.11	D2.12	38F	38H	50C
	40	D2.20	D2.21	D2.22	50G	50J	50D
	50	D2.20	D2.21	D2.22	50H	50L	50E
	60	D2.20	D2.21	D2.22	50J	50M	50E

APPROVED FOR CODE COMPLIANCE
OPM-0043-13
Jeffrey Y. Kikumoto
DATE: 06/23/2016
CALIFORNIA BUILDING CODE 2013

MASON WEST, INC.
1601 E. Miraloma Ave. Placentia, CA 92870
TEL (714) 630 - 0701, www.masonwest.com

Jiefu "Jeff" Zhang, SE
California SE No. S5270

ROUND DUCT	SEISMIC SOLID BRACING INSTALLATION REQUIREMENTS	LATERAL FORCE Fp = 1.0g (ASD) VERTICAL FORCE Fpv = 0.375g (ASD)

Fp = 1g Fpv = 0.375g		SOLID (RIGID) BRACING FOR 45° BRACE ANGLE BRACE SPACING - OPTION #1					
DUCT SUPPORT AT 10'-0" MAX.		INSTALLATION DETAILS					
		BRACE DIRECTION/SPACING			HANGER ATTACHMENT TYPE		BRACE ATTACHMENT TYPE
		TRANS./ 30 FT	LONG./ 60 FT	ALL-DIR./ 60 FT	TRANS./LONG. BRACE LOCATION	ALL-DIR. BRACE LOCATION	
DUCT WEIGHT (LBS/FT)	10	D2.10	D2.11	D2.12	38F	38K	50E
	20	D2.30	D2.31	D2.32	63J	63N	63H
	30	D2.30	D2.31		63L		63K

Fp = 1g Fpv = 0.375g		SOLID (RIGID) BRACING FOR 45° BRACE ANGLE BRACE SPACING - OPTION #2					
DUCT SUPPORT AT 10'-0" MAX.		INSTALLATION DETAILS					
		BRACE DIRECTION/SPACING			HANGER ATTACHMENT TYPE		BRACE ATTACHMENT TYPE
		TRANS./ 20 FT	LONG./ 40 FT	ALL-DIR./ 40 FT	TRANS./LONG. BRACE LOCATION	ALL-DIR. BRACE LOCATION	
DUCT WEIGHT (LBS/FT)	10	D2.10	D2.11	D2.12	38E	38H	50D
	20	D2.10	D2.11	D2.22	38G	50M	50F
	30	D2.30	D2.31	D2.32	63J	63N	63H
	40	D2.30	D2.31		63L		63J
	50	D2.30	D2.31		63M		63L

Fp = 1g Fpv = 0.375g		SOLID (RIGID) BRACING FOR 45° BRACE ANGLE BRACE SPACING - OPTION #3					
DUCT SUPPORT AT 10'-0" MAX.		INSTALLATION DETAILS					
		BRACE DIRECTION/SPACING			HANGER ATTACHMENT TYPE		BRACE ATTACHMENT TYPE
		TRANS./ 10 FT	LONG./ 20 FT	ALL-DIR./ 20 FT	TRANS./LONG. BRACE LOCATION	ALL-DIR. BRACE LOCATION	
DUCT WEIGHT (LBS/FT)	10	D2.10	D2.11	D2.12	38C	38F	50B
	20	D2.10	D2.11	D2.12	38E	38J	50D
	30	D2.10	D2.11	D2.12	38G	38L	50E
	40	D2.20	D2.21	D2.22	50H	50M	50F
	50	D2.20	D2.21	D2.22	50J	50N	50G
	60	D2.30	D2.31	D2.32	63L	63P	63H

REVIEWED FOR CODE COMPLIANCE
OPM-0043-13
BY: Jeffrey Y. Kikumoto
DATE: 06/23/2016
CALIFORNIA BUILDING CODE

MASON WEST, INC.
1601 E. Miraloma Ave. Placentia, CA 92870
TEL (714) 630 - 0701, www.masonwest.com

Jiefu "Jeff" Zhang, SE
California SE No. S5270

ROUND
DUCT

SEISMIC CABLE BRACING INSTALLATION REQUIREMENTS

LATERAL FORCE
Fp = 0.25g (ASD)
VERTICAL FORCE
Fpv = 0.375g (ASD)

Fp = 0.25g Fpv = 0.375g		STANDARD CABLE BRACING FOR 45° BRACE ANGLE BRACE SPACING - OPTION #1					
DUCT SUPPORT AT 10'-0" MAX.		INSTALLATION DETAILS					
		BRACE DIRECTION/SPACING			HANGER ATTACHMENT TYPE		BRACE ATTACHMENT TYPE
		TRANS./ 30 FT	LONG./ 60 FT	ALL-DIR./ 60 FT	TRANS./LONG. BRACE LOCATION	ALL-DIR. BRACE LOCATION	
DUCT WEIGHT (LBS/FT)	10	D6.10	D6.11	D6.12	38A	38A	38B
	20	D6.10	D6.11	D6.12	38C	38C	38C
	30	D6.10	D6.11	D6.12	38D	38D	38D
	40	D6.20	D6.21	D6.22	50E	50E	50E
	50	D6.20	D6.21	D6.22	50E	50E	50F

Fp = 0.25g Fpv = 0.375g		STANDARD CABLE BRACING FOR 45° BRACE ANGLE BRACE SPACING - OPTION #2					
DUCT SUPPORT AT 10'-0" MAX.		INSTALLATION DETAILS					
		BRACE DIRECTION/SPACING			HANGER ATTACHMENT TYPE		BRACE ATTACHMENT TYPE
		TRANS./ 30 FT	LONG./ 60 FT	ALL-DIR./ 60 FT	TRANS./LONG. BRACE LOCATION	ALL-DIR. BRACE LOCATION	
DUCT WEIGHT (LBS/FT)	10	D6.10	D6.11	D6.12	38A	38A	38B
	20	D6.10	D6.11	D6.12	38C	38C	38C
	30	D6.10	D6.11	D6.12	38D	38D	38D
	40	D6.20	D6.21	D6.22	50E	50E	50E
	50	D6.20	D6.21	D6.22	50E	50E	50F
	60	D6.20	D6.21	D6.22	50F	50F	50G

Fp = 0.25g Fpv = 0.375g		STANDARD CABLE BRACING FOR 45° BRACE ANGLE BRACE SPACING - OPTION #3					
DUCT SUPPORT AT 10'-0" MAX.		INSTALLATION DETAILS					
		BRACE DIRECTION/SPACING			HANGER ATTACHMENT TYPE		BRACE ATTACHMENT TYPE
		TRANS./ 20 FT	LONG./ 40 FT	ALL-DIR./ 40 FT	TRANS./LONG. BRACE LOCATION	ALL-DIR. BRACE LOCATION	
DUCT WEIGHT (LBS/FT)	10	D6.10	D6.11	D6.12	38A	38A	38A
	20	D6.10	D6.11	D6.12	38C	38C	38B
	30	D6.10	D6.11	D6.12	38D	38D	38C
	40	D6.20	D6.21	D6.22	50E	50E	50D
	50	D6.20	D6.21	D6.22	50E	50E	50E
	60	D6.20	D6.21	D6.22	50F	50F	50E

REVIEWED FOR CODE COMPLIANCE OF CALIFORNIA BUILDING CODE
OPM-0043-13
BY: Jeffrey Y. Kikumoto
DATE: 06/23/2016

MASON WEST, INC.
1601 E. Miraloma Ave. Placentia, CA 92870
TEL (714) 630 - 0701, www.masonwest.com

Jiefu "Jeff" Zhang, SE
California SE No. S5270

PAGE
B3.3

ROUND DUCT	SEISMIC CABLE BRACING INSTALLATION REQUIREMENTS	LATERAL FORCE Fp = 0.5g (ASD) VERTICAL FORCE Fpv = 0.375g (ASD)

Fp = 0.5g Fpv = 0.375g		STANDARD CABLE BRACING FOR 45° BRACE ANGLE BRACE SPACING - OPTION #1					
DUCT SUPPORT AT 10'-0" MAX.		INSTALLATION DETAILS					
		BRACE DIRECTION/SPACING			HANGER ATTACHMENT TYPE		BRACE ATTACHMENT TYPE
		TRANS./ 30 FT	LONG./ 60 FT	ALL-DIR./ 60 FT	TRANS./LONG. BRACE LOCATION	ALL-DIR. BRACE LOCATION	
DUCT WEIGHT (LBS/FT)	10	D6.10	D6.11	D6.12	38A	38A	38C
	20	D6.20	D6.21	D6.22	50C	50C	50E
	30	D6.20	D6.21	D6.22	50D	50D	50G

Fp = 0.5g Fpv = 0.375g		STANDARD CABLE BRACING FOR 45° BRACE ANGLE BRACE SPACING - OPTION #2					
DUCT SUPPORT AT 10'-0" MAX.		INSTALLATION DETAILS					
		BRACE DIRECTION/SPACING			HANGER ATTACHMENT TYPE		BRACE ATTACHMENT TYPE
		TRANS./ 20 FT	LONG./ 40 FT	ALL-DIR./ 40 FT	TRANS./LONG. BRACE LOCATION	ALL-DIR. BRACE LOCATION	
DUCT WEIGHT (LBS/FT)	10	D6.10	D6.11	D6.12	38A	38A	38B
	20	D6.10	D6.11	D6.12	38C	38C	38D
	30	D6.20	D6.21	D6.22	50D	50D	50E
	40	D6.20	D6.21	D6.22	50E	50E	50F
	50	D6.20	D6.21	D6.22	50E	50E	50G

Fp = 0.5g Fpv = 0.375g		STANDARD CABLE BRACING FOR 45° BRACE ANGLE BRACE SPACING - OPTION #3					
DUCT SUPPORT AT 10'-0" MAX.		INSTALLATION DETAILS					
		BRACE DIRECTION/SPACING			HANGER ATTACHMENT TYPE		BRACE ATTACHMENT TYPE
		TRANS./ 10 FT	LONG./ 20 FT	ALL-DIR./ 20 FT	TRANS./LONG. BRACE LOCATION	ALL-DIR. BRACE LOCATION	
DUCT WEIGHT (LBS/FT)	10	D6.10	D6.11	D6.12	38A	38A	38A
	20	D6.10	D6.11	D6.12	38C	38C	38B
	30	D6.10	D6.11	D6.12	38D	38D	38C
	40	D6.20	D6.21	D6.22	50E	50E	50D
	50	D6.20	D6.21	D6.22	50E	50E	50E
	60	D6.20	D6.21	D6.22	50F	50F	50E

CERTIFIED FOR OSHPD COMPLIANCE
CALIFORNIA BUILDING CODE 2016
OPM-0043-13 Reviewed by Jeffrey Y. Kikumoto
DATE: 06/23/2016

MASON WEST, INC.
1601 E. Miraloma Ave. Placentia, CA 92870
TEL (714) 630 - 0701, www.masonwest.com

Jiefu "Jeff" Zhang, SE
California SE No. S5270

ROUND DUCT	SEISMIC CABLE BRACING INSTALLATION REQUIREMENTS	LATERAL FORCE Fp = 1.0g (ASD) VERTICAL FORCE Fpv = 0.375g (ASD)

Fp = 1g Fpv = 0.375g		STANDARD CABLE BRACING FOR 45° BRACE ANGLE BRACE SPACING - OPTION #1					
DUCT SUPPORT AT 10'-0" MAX.		INSTALLATION DETAILS					
		BRACE DIRECTION/SPACING			HANGER ATTACHMENT TYPE		BRACE ATTACHMENT TYPE
		TRANS./ 20 FT	LONG./ 40 FT	ALL-DIR./ 40 FT	TRANS./LONG. BRACE LOCATION	ALL-DIR. BRACE LOCATION	
DUCT WEIGHT (LBS/FT)	10	D6.10	D6.11	D6.12	38A	38A	38D
	20	D6.20	D6.21	D6.22	50C	50C	50F

Fp = 1g Fpv = 0.375g		STANDARD CABLE BRACING FOR 45° BRACE ANGLE BRACE SPACING - OPTION #2					
DUCT SUPPORT AT 10'-0" MAX.		INSTALLATION DETAILS					
		BRACE DIRECTION/SPACING			HANGER ATTACHMENT TYPE		BRACE ATTACHMENT TYPE
		TRANS./ 10 FT	LONG./ 20 FT	ALL-DIR./ 20 FT	TRANS./LONG. BRACE LOCATION	ALL-DIR. BRACE LOCATION	
DUCT WEIGHT (LBS/FT)	10	D6.10	D6.11	D6.12	38A	38A	38B
	20	D6.10	D6.11	D6.12	38C	38C	38D
	30	D6.20	D6.21	D6.22	50D	50D	50E
	40	D6.20	D6.21	D6.22	50E	50E	50F
	50	D6.20	D6.21	D6.22	50E	50E	50G

REVIEWED FOR CODE COMPLIANCE
OSHPD
OPM-0043-13
BY: Jeffrey Y Kikumoto
DATE: 06/23/2016
CALIFORNIA BUILDING CODE, 2013

MASON WEST, INC.
1601 E. Miraloma Ave. Placentia, CA 92870
TEL (714) 630 - 0701, www.masonwest.com

Jiefu "Jeff" Zhang, SE
California SE No. S5270

ROUND
DUCT

SEISMIC CABLE X-PATTERN BRACING INSTALLATION REQUIREMENTS

LATERAL FORCE
Fp = 0.25g (ASD)
VERTICAL FORCE
Fpv = 0.375g (ASD)

Fp = 0.25g Fpv = 0.375g		X-PATTERN CABLE BRACING FOR 45° BRACE ANGLE BRACE SPACING - OPTION #1		
DUCT SUPPORT AT 10'-0" MAX.		INSTALLATION DETAILS		
		BRACE SPACING 30 FT	HANGER ATTACHMENT TYPE	BRACE ATTACHMENT TYPE
DUCT WEIGHT (LBS/FT)	10	D7.10	38A	38B
	20	D7.10	38C	38C
	30	D7.10	38D	38D
	40	D7.12	63E	50E
	50	D7.12	63E	50F
	60	D7.12	63F	50G

Fp = 0.25g Fpv = 0.375g		X-PATTERN CABLE BRACING FOR 45° BRACE ANGLE BRACE SPACING - OPTION #2		
DUCT SUPPORT AT 10'-0" MAX.		INSTALLATION DETAILS		
		BRACE SPACING 20 FT	HANGER ATTACHMENT TYPE	BRACE ATTACHMENT TYPE
DUCT WEIGHT (LBS/FT)	10	D7.10	38A	38A
	20	D7.10	38C	38B
	30	D7.10	38D	38C
	40	D7.12	63E	50D
	50	D7.12	63E	50E
	60	D7.12	63F	50E

Fp = 0.25g Fpv = 0.375g		X-PATTERN CABLE BRACING FOR 45° BRACE ANGLE BRACE SPACING - OPTION #3		
DUCT SUPPORT AT 10'-0" MAX.		INSTALLATION DETAILS		
		BRACE SPACING 10 FT	HANGER ATTACHMENT TYPE	BRACE ATTACHMENT TYPE
DUCT WEIGHT (LBS/FT)	10	D7.10	38A	38A
	20	D7.10	38C	38A
	30	D7.10	38D	38B
	40	D7.12	63E	50B
	50	D7.12	63E	50C
	60	D7.12	63F	50C

REVIEWED FOR CODE COMPLIANCE
OSHPD
OPM-0043-13
BY: Jeffrey Y. Kikumoto
DATE: 06/23/2016
CALIFORNIA BUILDING CODE 2013

MASON WEST, INC.
1601 E. Miraloma Ave. Placentia, CA 92870
TEL (714) 630 - 0701, www.masonwest.com

Jiefu "Jeff" Zhang, SE
California SE No. S5270

ROUND DUCT	SEISMIC CABLE X-PATTERN BRACING INSTALLATION REQUIREMENTS	LATERAL FORCE Fp = 0.5g (ASD) VERTICAL FORCE Fpv = 0.375g (ASD)

Fp = 0.5g Fpv = 0.375g		X-PATTERN CABLE BRACING FOR 45° BRACE ANGLE BRACE SPACING - OPTION #1		
DUCT SUPPORT AT 10'-0" MAX.		INSTALLATION DETAILS		
		BRACE SPACING 30 FT	HANGER ATTACHMENT TYPE	BRACE ATTACHMENT TYPE
DUCT WEIGHT (LBS/FT)	10	D7.10	38A	38C
	20	D7.11	50C	50E
	30	D7.11	50D	50G

Fp = 0.5g Fpv = 0.375g		X-PATTERN CABLE BRACING FOR 45° BRACE ANGLE BRACE SPACING - OPTION #2		
DUCT SUPPORT AT 10'-0" MAX.		INSTALLATION DETAILS		
		BRACE SPACING 20 FT	HANGER ATTACHMENT TYPE	BRACE ATTACHMENT TYPE
DUCT WEIGHT (LBS/FT)	10	D7.10	38A	38B
	20	D7.10	38C	38D
	30	D7.11	50D	50E
	40	D7.12	63E	50F
	50	D7.12	63E	50G

Fp = 0.5g Fpv = 0.375g		X-PATTERN CABLE BRACING FOR 45° BRACE ANGLE BRACE SPACING - OPTION #3		
DUCT SUPPORT AT 10'-0" MAX.		INSTALLATION DETAILS		
		BRACE SPACING 10 FT	HANGER ATTACHMENT TYPE	BRACE ATTACHMENT TYPE
DUCT WEIGHT (LBS/FT)	10	D7.10	38A	38A
	20	D7.10	38C	38B
	30	D7.10	38D	38C
	40	D7.12	63E	50D
	50	D7.12	63E	50E
	60	D7.12	63F	50E

REVIEWED FOR CODE COMPLIANCE 2013 CALIFORNIA BUILDING CODE
OSHPD
OPM-0043-13
BY: Jeffrey Y. Kikumoto
DATE: 06/23/2016

MASON WEST, INC.
1601 E. Miraloma Ave. Placentia, CA 92870
TEL (714) 630 - 0701, www.masonwest.com

Jiefu "Jeff" Zhang, SE
California SE No. S5270

ROUND
DUCT

SEISMIC CABLE X-PATTERN BRACING INSTALLATION REQUIREMENTS

LATERAL FORCE
Fp = 1.0g (ASD)
VERTICAL FORCE
Fpv = 0.375g (ASD)

Fp = 1g Fpv = 0.375g		X-PATTERN CABLE BRACING FOR 45° BRACE ANGLE BRACE SPACING - OPTION #1		
DUCT SUPPORT AT 10'-0" MAX.		INSTALLATION DETAILS		
		BRACE SPACING 25 FT	HANGER ATTACHMENT TYPE	BRACE ATTACHMENT TYPE
DUCT WEIGHT (LBS/FT)	10	D7.10	38A	38E
	20	D7.11	50C	50G

Fp = 1g Fpv = 0.375g		X-PATTERN CABLE BRACING FOR 45° BRACE ANGLE BRACE SPACING - OPTION #2		
DUCT SUPPORT AT 10'-0" MAX.		INSTALLATION DETAILS		
		BRACE SPACING 15 FT	HANGER ATTACHMENT TYPE	BRACE ATTACHMENT TYPE
DUCT WEIGHT (LBS/FT)	10	D7.10	38A	38C
	20	D7.11	50C	50E
	30	D7.11	50D	50G

Fp = 1g Fpv = 0.375g		X-PATTERN CABLE BRACING FOR 45° BRACE ANGLE BRACE SPACING - OPTION #3		
DUCT SUPPORT AT 10'-0" MAX.		INSTALLATION DETAILS		
		BRACE SPACING 10 FT	HANGER ATTACHMENT TYPE	BRACE ATTACHMENT TYPE
DUCT WEIGHT (LBS/FT)	10	D7.10	38A	38B
	20	D7.10	38C	38D
	30	D7.11	50D	50E
	40	D7.12	63E	50F
	50	D7.12	63E	50G

REVIEWED FOR CODE COMPLIANCE
OSHPD
OPM-0043-13
BY: Jeffrey Y. Kikumoto
DATE: 06/23/2016
CALIFORNIA BUILDING CODE 2013

MASON WEST, INC.
1601 E. Miraloma Ave. Placentia, CA 92870
TEL (714) 630 - 0701, www.masonwest.com

Jiefu "Jeff" Zhang, SE
California SE No. S5270

PAGE
B3.8

FACTORY BUILT DUCT

SEISMIC SOLID BRACING INSTALLATION REQUIREMENTS

LATERAL FORCE
Fp = 0.25g (ASD)
VERTICAL FORCE
Fpv = 0.375g (ASD)

Fp = 0.25g Fpv = 0.375g		SOLID (RIGID) BRACING FOR 45° BRACE ANGLE BRACE SPACING - OPTION #1					
DUCT SUPPORT AT 10'-0" MAX.		INSTALLATION DETAILS					
		BRACE DIRECTION/SPACING			HANGER ATTACHMENT TYPE		BRACE ATTACHMENT TYPE
		TRANS./ 30 FT	LONG./ 60 FT	ALL-DIR./ 60 FT	TRANS./LONG. BRACE LOCATION	ALL-DIR. BRACE LOCATION	
DUCT WEIGHT (LBS/FT)	10	D3.10	D3.11	D3.12	38C	38E	50B
	20	D3.10	D3.11	D3.12	38E	38G	50C
	30	D3.10	D3.11	D3.12	38F	38J	50D
	40	D3.20	D3.21	D3.22	50H	50L	50E
	50	D3.20	D3.21	D3.22	50J	50M	50F

Fp = 0.25g Fpv = 0.375g		SOLID (RIGID) BRACING FOR 45° BRACE ANGLE BRACE SPACING - OPTION #2					
DUCT SUPPORT AT 10'-0" MAX.		INSTALLATION DETAILS					
		BRACE DIRECTION/SPACING			HANGER ATTACHMENT TYPE		BRACE ATTACHMENT TYPE
		TRANS./ 30 FT	LONG./ 60 FT	ALL-DIR./ 60 FT	TRANS./LONG. BRACE LOCATION	ALL-DIR. BRACE LOCATION	
DUCT WEIGHT (LBS/FT)	10	D3.10	D3.11	D3.12	38C	38E	50B
	20	D3.10	D3.11	D3.12	38E	38G	50C
	30	D3.10	D3.11	D3.12	38F	38J	50D
	40	D3.20	D3.21	D3.22	50H	50L	50E
	50	D3.20	D3.21	D3.22	50J	50M	50F
	60	D3.20	D3.21	D3.22	50K	50N	50G

Fp = 0.25g Fpv = 0.375g		SOLID (RIGID) BRACING FOR 45° BRACE ANGLE BRACE SPACING - OPTION #3					
DUCT SUPPORT AT 10'-0" MAX.		INSTALLATION DETAILS					
		BRACE DIRECTION/SPACING			HANGER ATTACHMENT TYPE		BRACE ATTACHMENT TYPE
		TRANS./ 20 FT	LONG./ 40 FT	ALL-DIR./ 40 FT	TRANS./LONG. BRACE LOCATION	ALL-DIR. BRACE LOCATION	
DUCT WEIGHT (LBS/FT)	10	D3.10	D3.11	D3.12	38B	38D	50A
	20	D3.10	D3.11	D3.12	38D	38F	50B
	30	D3.10	D3.11	D3.12	38F	38H	50C
	40	D3.20	D3.21	D3.22	50G	50J	50D
	50	D3.20	D3.21	D3.22	50H	50L	50E
	60	D3.20	D3.21	D3.22	50J	50M	50E

OSHPD
REVIEWED FOR CODE COMPLIANCE
OPM-0043-13
BY: Jeffrey Y. Kikumoto
DATE: 06/23/2016
CALIFORNIA BUILDING CODE

MASON WEST, INC.
1601 E. Miraloma Ave. Placentia, CA 92870
TEL (714) 630 - 0701, www.masonwest.com

Jiefu "Jeff" Zhang, SE
California SE No. S5270

PAGE
B4.0

FACTORY BUILT DUCT	SEISMIC SOLID BRACING INSTALLATION REQUIREMENTS	LATERAL FORCE Fp = 0.5g (ASD) VERTICAL FORCE Fpv = 0.375g (ASD)

Fp = 0.5g Fpv = 0.375g		SOLID (RIGID) BRACING FOR 45° BRACE ANGLE BRACE SPACING - OPTION #1					
DUCT SUPPORT AT 10'-0" MAX.		INSTALLATION DETAILS					
		BRACE DIRECTION/SPACING			HANGER ATTACHMENT TYPE		BRACE ATTACHMENT TYPE
		TRANS./ 30 FT	LONG./ 60 FT	ALL-DIR./ 60 FT	TRANS./LONG. BRACE LOCATION	ALL-DIR. BRACE LOCATION	
DUCT WEIGHT (LBS/FT)	10	D3.10	D3.11	D3.12	38D	38G	50C
	20	D3.10	D3.11	D3.12	38F	38K	50E
	30	D3.20	D3.21	D3.22	50H	50M	50G

Fp = 0.5g Fpv = 0.375g		SOLID (RIGID) BRACING FOR 45° BRACE ANGLE BRACE SPACING - OPTION #2					
DUCT SUPPORT AT 10'-0" MAX.		INSTALLATION DETAILS					
		BRACE DIRECTION/SPACING			HANGER ATTACHMENT TYPE		BRACE ATTACHMENT TYPE
		TRANS./ 20 FT	LONG./ 40 FT	ALL-DIR./ 40 FT	TRANS./LONG. BRACE LOCATION	ALL-DIR. BRACE LOCATION	
DUCT WEIGHT (LBS/FT)	10	D3.10	D3.11	D3.12	38C	38F	50B
	20	D3.10	D3.11	D3.12	38E	38J	50D
	30	D3.10	D3.11	D3.12	38G	38L	50E
	40	D3.20	D3.21	D3.22	50H	50M	50F
	50	D3.20	D3.21	D3.22	50J	50N	50G

Fp = 0.5g Fpv = 0.375g		SOLID (RIGID) BRACING FOR 45° BRACE ANGLE BRACE SPACING - OPTION #3					
DUCT SUPPORT AT 10'-0" MAX.		INSTALLATION DETAILS					
		BRACE DIRECTION/SPACING			HANGER ATTACHMENT TYPE		BRACE ATTACHMENT TYPE
		TRANS./ 10 FT	LONG./ 20 FT	ALL-DIR./ 20 FT	TRANS./LONG. BRACE LOCATION	ALL-DIR. BRACE LOCATION	
DUCT WEIGHT (LBS/FT)	10	D3.10	D3.11	D3.12	38B	38D	50A
	20	D3.10	D3.11	D3.12	38D	38F	50B
	30	D3.10	D3.11	D3.12	38F	38H	50C
	40	D3.20	D3.21	D3.22	50G	50J	50D
	50	D3.20	D3.21	D3.22	50H	50L	50E
	60	D3.20	D3.21	D3.22	50J	50M	50E

REVIEWED FOR CODE COMPLIANCE
OPM-0043-13
By: Jeffrey Y. Kikumoto
DATE: 06/23/2016
CALIFORNIA BUILDING CODE 2013

MASON WEST, INC.
1601 E. Miraloma Ave. Placentia, CA 92870
TEL (714) 630 - 0701, www.masonwest.com

Jiefu "Jeff" Zhang, SE
California SE No. S5270

FACTORY BUILT DUCT	SEISMIC SOLID BRACING INSTALLATION REQUIREMENTS	LATERAL FORCE Fp = 1.0g (ASD) VERTICAL FORCE Fpv = 0.375g (ASD)

Fp = 1g Fpv = 0.375g		SOLID (RIGID) BRACING FOR 45° BRACE ANGLE BRACE SPACING - OPTION #1					
DUCT SUPPORT AT 10'-0" MAX.		INSTALLATION DETAILS					
		BRACE DIRECTION/SPACING			HANGER ATTACHMENT TYPE		BRACE ATTACHMENT TYPE
		TRANS./ 20 FT	LONG./ 40 FT	ALL-DIR./ 40 FT	TRANS./LONG. BRACE LOCATION	ALL-DIR. BRACE LOCATION	
DUCT WEIGHT (LBS/FT)	10	D3.10	D3.11	D3.12	38E	38H	50D
	20	D3.10	D3.11	D3.22	38G	50M	50F

Fp = 1g Fpv = 0.375g		SOLID (RIGID) BRACING FOR 45° BRACE ANGLE BRACE SPACING - OPTION #2					
DUCT SUPPORT AT 10'-0" MAX.		INSTALLATION DETAILS					
		BRACE DIRECTION/SPACING			HANGER ATTACHMENT TYPE		BRACE ATTACHMENT TYPE
		TRANS./ 15 FT	LONG./ 30 FT	ALL-DIR./ 30 FT	TRANS./LONG. BRACE LOCATION	ALL-DIR. BRACE LOCATION	
DUCT WEIGHT (LBS/FT)	10	D3.10	D3.11	D3.12	38D	38G	50C
	20	D3.10	D3.11	D3.12	38F	38K	50E
	30	D3.20	D3.21	D3.22	50H	50M	50G

APPROVED FOR CODE COMPLIANCE
OPM-0043-13
Jeffrey Y. Kikumoto
DATE: 06/23/2016
CALIFORNIA BUILDING CODE 2013

Fp = 1g Fpv = 0.375g		SOLID (RIGID) BRACING FOR 45° BRACE ANGLE BRACE SPACING - OPTION #3					
DUCT SUPPORT AT 10'-0" MAX.		INSTALLATION DETAILS					
		BRACE DIRECTION/SPACING			HANGER ATTACHMENT TYPE		BRACE ATTACHMENT TYPE
		TRANS./ 10 FT	LONG./ 20 FT	ALL-DIR./ 20 FT	TRANS./LONG. BRACE LOCATION	ALL-DIR. BRACE LOCATION	
DUCT WEIGHT (LBS/FT)	10	D3.10	D3.11	D3.12	38C	38F	50B
	20	D3.10	D3.11	D3.12	38E	38J	50D
	30	D3.10	D3.11	D3.12	38G	38L	50E
	40	D3.20	D3.21	D3.22	50H	50M	50F
	50	D3.20	D3.21	D3.22	50J	50N	50G

MASON WEST, INC.
1601 E. Miraloma Ave. Placentia, CA 92870
TEL (714) 630 - 0701, www.masonwest.com

Jiefu "Jeff" Zhang, SE
California SE No. S5270

PAGE
B4.2

FACTORY BUILT DUCT

SEISMIC CABLE BRACING INSTALLATION REQUIREMENTS

LATERAL FORCE
Fp = 0.25g (ASD)
VERTICAL FORCE
Fpv = 0.375g (ASD)

Fp = 0.25g Fpv = 0.375g		STANDARD CABLE BRACING FOR 45° BRACE ANGLE BRACE SPACING - OPTION #1					
DUCT SUPPORT AT 10'-0" MAX.		INSTALLATION DETAILS					
		BRACE DIRECTION/SPACING			HANGER ATTACHMENT TYPE		BRACE ATTACHMENT TYPE
		TRANS./ 30 FT	LONG./ 60 FT	ALL-DIR./ 60 FT	TRANS./LONG. BRACE LOCATION	ALL-DIR. BRACE LOCATION	
DUCT WEIGHT (LBS/FT)	10	D8.10	D8.11	D8.12	38A	38A	38B
	20	D8.10	D8.11	D8.12	38C	38C	38C
	30	D8.10	D8.11	D8.12	38D	38D	38D
	40	D8.20	D8.21		50E		50E
	50	D8.20	D8.21		50E		50F
	60	D8.20	D8.21		50F		50G

Fp = 0.25g Fpv = 0.375g		STANDARD CABLE BRACING FOR 45° BRACE ANGLE BRACE SPACING - OPTION #2					
DUCT SUPPORT AT 10'-0" MAX.		INSTALLATION DETAILS					
		BRACE DIRECTION/SPACING			HANGER ATTACHMENT TYPE		BRACE ATTACHMENT TYPE
		TRANS./ 30 FT	LONG./ 60 FT	ALL-DIR./ 60 FT	TRANS./LONG. BRACE LOCATION	ALL-DIR. BRACE LOCATION	
DUCT WEIGHT (LBS/FT)	10	D8.10	D8.11	D8.12	38A	38A	38B
	20	D8.10	D8.11	D8.12	38C	38C	38C
	30	D8.10	D8.11	D8.12	38D	38D	38D
	40	D8.20	D8.21		50E		50E
	50	D8.20	D8.21		50E		50F
	60	D8.20	D8.21		50F		50G

Fp = 0.25g Fpv = 0.375g		STANDARD CABLE BRACING FOR 45° BRACE ANGLE BRACE SPACING - OPTION #3					
DUCT SUPPORT AT 10'-0" MAX.		INSTALLATION DETAILS					
		BRACE DIRECTION/SPACING			HANGER ATTACHMENT TYPE		BRACE ATTACHMENT TYPE
		TRANS./ 20 FT	LONG./ 40 FT	ALL-DIR./ 40 FT	TRANS./LONG. BRACE LOCATION	ALL-DIR. BRACE LOCATION	
DUCT WEIGHT (LBS/FT)	10	D8.10	D8.11	D8.12	38A	38A	38A
	20	D8.10	D8.11	D8.12	38C	38C	38B
	30	D8.10	D8.11	D8.12	38D	38D	38C
	40	D8.20	D8.21	D8.22	50E	50E	50D
	50	D8.20	D8.21	D8.22	50E	50E	50E
	60	D8.20	D8.21		50F		50E

OSHPD PREAPPROVED FOR CODE COMPLIANCE OF CALIFORNIA BUILDING CODE
OPM-0043-13
BY: Jeffrey Y. Kikumoto
DATE: 06/23/2016

MASON WEST, INC.
1601 E. Miraloma Ave. Placentia, CA 92870
TEL (714) 630 - 0701, www.masonwest.com

Jiefu "Jeff" Zhang, SE
California SE No. S5270

PAGE
B4.3

FACTORY BUILT DUCT

SEISMIC CABLE BRACING INSTALLATION REQUIREMENTS

LATERAL FORCE
Fp = 0.5g (ASD)
VERTICAL FORCE
Fpv = 0.375g (ASD)

Fp = 0.5g Fpv = 0.375g		STANDARD CABLE BRACING FOR 45° BRACE ANGLE BRACE SPACING - OPTION #1					
DUCT SUPPORT AT 10'-0" MAX.		INSTALLATION DETAILS					
		BRACE DIRECTION/SPACING			HANGER ATTACHMENT TYPE		BRACE ATTACHMENT TYPE
		TRANS./ 30 FT	LONG./ 60 FT	ALL-DIR./ 60 FT	TRANS./LONG. BRACE LOCATION	ALL-DIR. BRACE LOCATION	
DUCT WEIGHT (LBS/FT)	10	D8.10	D8.11	D8.12	38A	38A	38C
	20	D8.20	D8.21		50C		50E
	30	D8.20	D8.21		50D		50G
	40						
	50						
	60						

Fp = 0.5g Fpv = 0.375g		STANDARD CABLE BRACING FOR 45° BRACE ANGLE BRACE SPACING - OPTION #2					
DUCT SUPPORT AT 10'-0" MAX.		INSTALLATION DETAILS					
		BRACE DIRECTION/SPACING			HANGER ATTACHMENT TYPE		BRACE ATTACHMENT TYPE
		TRANS./ 20 FT	LONG./ 40 FT	ALL-DIR./ 40 FT	TRANS./LONG. BRACE LOCATION	ALL-DIR. BRACE LOCATION	
DUCT WEIGHT (LBS/FT)	10	D8.10	D8.11	D8.12	38A	38A	38B
	20	D8.10	D8.11	D8.12	38C	38C	38D
	30	D8.20	D8.21		50D		50E
	40	D8.20	D8.21		50E		50F
	50	D8.20	D8.21		50E		50G

Fp = 0.5g Fpv = 0.375g		STANDARD CABLE BRACING FOR 45° BRACE ANGLE BRACE SPACING - OPTION #3					
DUCT SUPPORT AT 10'-0" MAX.		INSTALLATION DETAILS					
		BRACE DIRECTION/SPACING			HANGER ATTACHMENT TYPE		BRACE ATTACHMENT TYPE
		TRANS./ 10 FT	LONG./ 20 FT	ALL-DIR./ 20 FT	TRANS./LONG. BRACE LOCATION	ALL-DIR. BRACE LOCATION	
DUCT WEIGHT (LBS/FT)	10	D8.10	D8.11	D8.12	38A	38A	38A
	20	D8.10	D8.11	D8.12	38C	38C	38B
	30	D8.10	D8.11	D8.12	38D	38D	38C
	40	D8.20	D8.21	D8.22	50E	50E	50D
	50	D8.20	D8.21	D8.22	50E	50E	50E
	60	D8.20	D8.21		50F		50E

REVIEWED FOR CODE COMPLIANCE
OPM-0043-13
Reviewed by: Jeffrey Y. Kikumoto
DATE: 06/23/2016
2013 CALIFORNIA BUILDING CODE

MASON WEST, INC.
1601 E. Miraloma Ave. Placentia, CA 92870
TEL (714) 630 - 0701, www.masonwest.com

Jiefu "Jeff" Zhang, SE
California SE No. S5270

FACTORY BUILT DUCT

SEISMIC CABLE BRACING INSTALLATION REQUIREMENTS

LATERAL FORCE
Fp = 1.0g (ASD)
VERTICAL FORCE
Fpv = 0.375g (ASD)

Fp = 1g Fpv = 0.375g		STANDARD CABLE BRACING FOR 45° BRACE ANGLE BRACE SPACING - OPTION #1					
DUCT SUPPORT AT 10'-0" MAX.		INSTALLATION DETAILS					
		BRACE DIRECTION/SPACING			HANGER ATTACHMENT TYPE		BRACE ATTACHMENT TYPE
		TRANS./ 20 FT	LONG./ 40 FT	ALL-DIR./ 40 FT	TRANS./LONG. BRACE LOCATION	ALL-DIR. BRACE LOCATION	
DUCT WEIGHT (LBS/FT)	10	D8.10	D8.11	D8.12	38A	38A	38D
	20	D8.20	D8.21		50C		50F

Fp = 1g Fpv = 0.375g		STANDARD CABLE BRACING FOR 45° BRACE ANGLE BRACE SPACING - OPTION #2					
DUCT SUPPORT AT 10'-0" MAX.		INSTALLATION DETAILS					
		BRACE DIRECTION/SPACING			HANGER ATTACHMENT TYPE		BRACE ATTACHMENT TYPE
		TRANS./ 15 FT	LONG./ 30 FT	ALL-DIR./ 30 FT	TRANS./LONG. BRACE LOCATION	ALL-DIR. BRACE LOCATION	
DUCT WEIGHT (LBS/FT)	10	D8.10	D8.11	D8.12	38A	38A	38C
	20	D8.20	D8.21		50C		50E
	30	D8.20	D8.21		50D		50G

OPM-0043-13 Reviewed for Code Compliance by Jeffrey Y. Kikumoto DATE: 06/23/2016

Fp = 1g Fpv = 0.375g		STANDARD CABLE BRACING FOR 45° BRACE ANGLE BRACE SPACING - OPTION #3					
DUCT SUPPORT AT 10'-0" MAX.		INSTALLATION DETAILS					
		BRACE DIRECTION/SPACING			HANGER ATTACHMENT TYPE		BRACE ATTACHMENT TYPE
		TRANS./ 10 FT	LONG./ 20 FT	ALL-DIR./ 20 FT	TRANS./LONG. BRACE LOCATION	ALL-DIR. BRACE LOCATION	
DUCT WEIGHT (LBS/FT)	10	D8.10	D8.11	D8.12	38A	38A	38B
	20	D8.10	D8.11	D8.12	38C	38C	38D
	30	D8.20	D8.21		50D		50E
	40	D8.20	D8.21		50E		50F
	50	D8.20	D8.21		50E		50G

MASON WEST, INC.
1601 E. Miraloma Ave. Placentia, CA 92870
TEL (714) 630 - 0701, www.masonwest.com

Jiefu "Jeff" Zhang, SE
California SE No. S5270

PAGE
B4.5

CABLE TRAY	SEISMIC SOLID BRACING INSTALLATION REQUIREMENTS	LATERAL FORCE Fp = 0.25g (ASD) VERTICAL FORCE Fpv = 0.375g (ASD)

Fp = 0.25g Fpv = 0.375g		SOLID (RIGID) BRACING FOR 45° BRACE ANGLE BRACE SPACING - OPTION #1					
ELECTRICAL TRAY SUPPORT AT 10'-0" MAX.		INSTALLATION DETAILS					
		BRACE DIRECTION/SPACING			HANGER ATTACHMENT TYPE		BRACE ATTACHMENT TYPE
		TRANS./ 40 FT	LONG./ 80 FT	ALL-DIR./ 80 FT	TRANS./LONG. BRACE LOCATION	ALL-DIR. BRACE LOCATION	
WEIGHT (LBS/FT)	10	E1.10	E1.11	E1.12	38C	38F	50B
	20	E1.10	E1.11	E1.12	38E	38J	50D
	30	E1.20	E1.21	E1.22	50G	50L	50E
	40	E1.20	E1.21	E1.22	50H	50M	50F
	45	E1.20	E1.21	E1.22	50J	50M	50G
	50	E1.30	E1.31	E1.32	63J	63N	63G

Fp = 0.25g Fpv = 0.375g		SOLID (RIGID) BRACING FOR 45° BRACE ANGLE BRACE SPACING - OPTION #2					
ELECTRICAL TRAY SUPPORT AT 10'-0" MAX.		INSTALLATION DETAILS					
		BRACE DIRECTION/SPACING			HANGER ATTACHMENT TYPE		BRACE ATTACHMENT TYPE
		TRANS./ 30 FT	LONG./ 60 FT	ALL-DIR./ 60 FT	TRANS./LONG. BRACE LOCATION	ALL-DIR. BRACE LOCATION	
WEIGHT (LBS/FT)	10	E1.10	E1.11	E1.12	38C	38E	50B
	20	E1.10	E1.11	E1.12	38E	38G	50C
	30	E1.20	E1.21	E1.22	50F	50J	50D
	40	E1.20	E1.21	E1.22	50H	50L	50E
	45	E1.20	E1.21	E1.22	50H	50M	50E
	50	E1.30	E1.31	E1.32	63J	63M	63F
	60	E1.30	E1.31	E1.32	63K	63N	63G
	70	E1.30	E1.31	E1.32	63L	63N	63G

Fp = 0.25g Fpv = 0.375g		SOLID (RIGID) BRACING FOR 45° BRACE ANGLE BRACE SPACING - OPTION #3					
ELECTRICAL TRAY SUPPORT AT 10'-0" MAX.		INSTALLATION DETAILS					
		BRACE DIRECTION/SPACING			HANGER ATTACHMENT TYPE		BRACE ATTACHMENT TYPE
		TRANS./ 20 FT	LONG./ 40 FT	ALL-DIR./ 40 FT	TRANS./LONG. BRACE LOCATION	ALL-DIR. BRACE LOCATION	
WEIGHT (LBS/FT)	10	E1.10	E1.11	E1.12	38B	38D	50A
	20	E1.10	E1.11	E1.12	38D	38F	50B
	30	E1.20	E1.21	E1.22	50F	50H	50C
	40	E1.20	E1.21	E1.22	50G	50J	50D
	45	E1.20	E1.21	E1.22	50G	50K	50D
	50	E1.30	E1.31	E1.32	63H	63L	63E
	60	E1.30	E1.31	E1.32	63J	63M	63E
	70	E1.30	E1.31	E1.32	63J	63M	63F
	80	E1.30	E1.31	E1.32	63K	63N	63F
	85	E1.30	E1.31	E1.32	63L	63N	63F

REVIEWED FOR CODE COMPLIANCE
OPM-0043-13
Reviewed by: Kikumoto
Date: 06/23/2016
CALIFORNIA BUILDING CODE 2013

MASON WEST, INC.
1601 E. Miraloma Ave. Placentia, CA 92870
TEL (714) 630 - 0701, www.masonwest.com

Jiefu "Jeff" Zhang, SE
California SE No. S5270

CABLE TRAY	SEISMIC SOLID BRACING INSTALLATION REQUIREMENTS	LATERAL FORCE Fp = 0.5g (ASD) VERTICAL FORCE Fpv = 0.375g (ASD)

Fp = 0.5g Fpv = 0.375g		SOLID (RIGID) BRACING FOR 45° BRACE ANGLE BRACE SPACING - OPTION #1					
ELECTRICAL TRAY SUPPORT AT 10'-0" MAX.		INSTALLATION DETAILS					
		BRACE DIRECTION/SPACING			HANGER ATTACHMENT TYPE		BRACE ATTACHMENT TYPE
		TRANS./ 30 FT	LONG./ 60 FT	ALL-DIR./ 60 FT	TRANS./LONG. BRACE LOCATION	ALL-DIR. BRACE LOCATION	
WEIGHT (LBS/FT)	10	E1.10	E1.11	E1.12	38D	38G	50C
	20	E1.10	E1.11	E1.12	38F	38K	50E
	30	E1.20	E1.21	E1.22	50H	50M	50G

Fp = 0.5g Fpv = 0.375g		SOLID (RIGID) BRACING FOR 45° BRACE ANGLE BRACE SPACING - OPTION #2					
ELECTRICAL TRAY SUPPORT AT 10'-0" MAX.		INSTALLATION DETAILS					
		BRACE DIRECTION/SPACING			HANGER ATTACHMENT TYPE		BRACE ATTACHMENT TYPE
		TRANS./ 20 FT	LONG./ 40 FT	ALL-DIR./ 40 FT	TRANS./LONG. BRACE LOCATION	ALL-DIR. BRACE LOCATION	
WEIGHT (LBS/FT)	10	E1.10	E1.11	E1.12	38C	38F	50B
	20	E1.10	E1.11	E1.12	38E	38J	50D
	30	E1.20	E1.21	E1.22	50G	50L	50E
	40	E1.20	E1.21	E1.22	50H	50M	50F
	45	E1.20	E1.21	E1.22	50J	50M	50G
	50	E1.30	E1.31	E1.32	63J	63N	63G

OPM-0043-13
DATE: 06/23/2016

Fp = 0.5g Fpv = 0.375g		SOLID (RIGID) BRACING FOR 45° BRACE ANGLE BRACE SPACING - OPTION #3					
ELECTRICAL TRAY SUPPORT AT 10'-0" MAX.		INSTALLATION DETAILS					
		BRACE DIRECTION/SPACING			HANGER ATTACHMENT TYPE		BRACE ATTACHMENT TYPE
		TRANS./ 10 FT	LONG./ 20 FT	ALL-DIR./ 20 FT	TRANS./LONG. BRACE LOCATION	ALL-DIR. BRACE LOCATION	
WEIGHT (LBS/FT)	10	E1.10	E1.11	E1.12	38B	38D	50A
	20	E1.10	E1.11	E1.12	38D	38F	50B
	30	E1.20	E1.21	E1.22	50F	50H	50C
	40	E1.20	E1.21	E1.22	50G	50J	50D
	45	E1.20	E1.21	E1.22	50G	50K	50D
	50	E1.30	E1.31	E1.32	63H	63L	63E
	60	E1.30	E1.31	E1.32	63J	63M	63E
	70	E1.30	E1.31	E1.32	63J	63M	63F
	80	E1.30	E1.31	E1.32	63K	63N	63F
	85	E1.30	E1.31	E1.32	63L	63N	63F

MASON WEST, INC.
1601 E. Miraloma Ave. Placentia, CA 92870
TEL (714) 630 - 0701, www.masonwest.com

Jiefu "Jeff" Zhang, SE
California SE No. S5270

PAGE
B5.1

CABLE TRAY	SEISMIC SOLID BRACING INSTALLATION REQUIREMENTS	LATERAL FORCE Fp = 1.0g (ASD) VERTICAL FORCE Fpv = 0.375g (ASD)

Fp = 1g Fpv = 0.375g		SOLID (RIGID) BRACING FOR 45° BRACE ANGLE BRACE SPACING - OPTION #1					
ELECTRICAL TRAY SUPPORT AT 10'-0" MAX.		INSTALLATION DETAILS					
		BRACE DIRECTION/SPACING			HANGER ATTACHMENT TYPE		BRACE ATTACHMENT TYPE
		TRANS./ 20 FT	LONG./ 40 FT	ALL-DIR./ 40 FT	TRANS./LONG. BRACE LOCATION	ALL-DIR. BRACE LOCATION	
WEIGHT (LBS/FT)	10	E1.10	E1.11	E1.12	38E	38H	50D
	20	E1.10	E1.11	E1.22	38G	50M	50F

Fp = 1g Fpv = 0.375g		SOLID (RIGID) BRACING FOR 45° BRACE ANGLE BRACE SPACING - OPTION #2					
ELECTRICAL TRAY SUPPORT AT 10'-0" MAX.		INSTALLATION DETAILS					
		BRACE DIRECTION/SPACING			HANGER ATTACHMENT TYPE		BRACE ATTACHMENT TYPE
		TRANS./ 15 FT	LONG./ 30 FT	ALL-DIR./ 30 FT	TRANS./LONG. BRACE LOCATION	ALL-DIR. BRACE LOCATION	
WEIGHT (LBS/FT)	10	E1.10	E1.11	E1.12	38D	38G	50C
	20	E1.10	E1.11	E1.12	38F	38K	50E
	30	E1.20	E1.21	E1.22	50H	50M	50G

REVIEWED FOR CODE COMPLIANCE
OPM-0043-13
BY: Jeffrey Y. Kikumoto
DATE: 06/23/2016
CALIFORNIA BUILDING CODE 2013

Fp = 1g Fpv = 0.375g		SOLID (RIGID) BRACING FOR 45° BRACE ANGLE BRACE SPACING - OPTION #3					
ELECTRICAL TRAY SUPPORT AT 10'-0" MAX.		INSTALLATION DETAILS					
		BRACE DIRECTION/SPACING			HANGER ATTACHMENT TYPE		BRACE ATTACHMENT TYPE
		TRANS./ 10 FT	LONG./ 20 FT	ALL-DIR./ 20 FT	TRANS./LONG. BRACE LOCATION	ALL-DIR. BRACE LOCATION	
WEIGHT (LBS/FT)	10	E1.10	E1.11	E1.12	38C	38F	50B
	20	E1.10	E1.11	E1.12	38E	38J	50D
	30	E1.20	E1.21	E1.22	50G	50L	50E
	40	E1.20	E1.21	E1.22	50H	50M	50F
	45	E1.20	E1.21	E1.22	50J	50M	50G
	50	E1.30	E1.31	E1.32	63J	63N	63G

MASON WEST, INC.
1601 E. Miraloma Ave. Placentia, CA 92870
TEL (714) 630 - 0701, www.masonwest.com

Jiefu "Jeff" Zhang, SE
California SE No. S5270

PAGE
B5.2

CABLE TRAY

SEISMIC CABLE BRACING INSTALLATION REQUIREMENTS

LATERAL FORCE
Fp = 0.25g (ASD)
VERTICAL FORCE
Fpv = 0.375g (ASD)

Fp = 0.25g Fpv = 0.375g		STANDARD CABLE BRACING FOR 45° BRACE ANGLE BRACE SPACING - OPTION #1					
ELECTRICAL TRAY SUPPORT AT 10'-0" MAX.		INSTALLATION DETAILS					
		BRACE DIRECTION/SPACING			HANGER ATTACHMENT TYPE		BRACE ATTACHMENT TYPE
		TRANS./ 40 FT	LONG./ 80 FT	ALL-DIR./ 80 FT	TRANS./LONG. BRACE LOCATION	ALL-DIR. BRACE LOCATION	
WEIGHT (LBS/FT)	10	E2.10	E2.11	E2.12	38A	38A	38B
	20	E2.10	E2.11	E2.12	38C	38C	38D
	30	E2.20	E2.21	E2.22	50D	50D	50E
	40	E2.20	E2.21	E2.22	50E	50E	50F
	45	E2.20	E2.21	E2.22	50E	50E	50G
	50	E2.30	E2.31	E2.32	63E	63E	50G

Fp = 0.25g Fpv = 0.375g		STANDARD CABLE BRACING FOR 45° BRACE ANGLE BRACE SPACING - OPTION #2					
ELECTRICAL TRAY SUPPORT AT 10'-0" MAX.		INSTALLATION DETAILS					
		BRACE DIRECTION/SPACING			HANGER ATTACHMENT TYPE		BRACE ATTACHMENT TYPE
		TRANS./ 30 FT	LONG./ 60 FT	ALL-DIR./ 60 FT	TRANS./LONG. BRACE LOCATION	ALL-DIR. BRACE LOCATION	
WEIGHT (LBS/FT)	10	E2.10	E2.11	E2.12	38A	38A	38B
	20	E2.10	E2.11	E2.12	38C	38C	38C
	30	E2.20	E2.21	E2.22	50D	50D	50D
	40	E2.20	E2.21	E2.22	50E	50E	50E
	45	E2.20	E2.21	E2.22	50E	50E	50E
	50	E2.30	E2.31	E2.32	63E	63E	50F
	60	E2.30	E2.31	E2.32	63F	63F	50G
	70	E2.30	E2.31	E2.32	63G	63G	50G

Fp = 0.25g Fpv = 0.375g		STANDARD CABLE BRACING FOR 45° BRACE ANGLE BRACE SPACING - OPTION #3					
ELECTRICAL TRAY SUPPORT AT 10'-0" MAX.		INSTALLATION DETAILS					
		BRACE DIRECTION/SPACING			HANGER ATTACHMENT TYPE		BRACE ATTACHMENT TYPE
		TRANS./ 20 FT	LONG./ 40 FT	ALL-DIR./ 40 FT	TRANS./LONG. BRACE LOCATION	ALL-DIR. BRACE LOCATION	
WEIGHT (LBS/FT)	10	E2.10	E2.11	E2.12	38A	38A	38A
	20	E2.10	E2.11	E2.12	38C	38C	38B
	30	E2.20	E2.21	E2.22	50D	50D	50C
	40	E2.20	E2.21	E2.22	50E	50E	50D
	45	E2.20	E2.21	E2.22	50E	50E	50D
	50	E2.30	E2.31	E2.32	63E	63E	50E
	60	E2.30	E2.31	E2.32	63F	63F	50E
	70	E2.30	E2.31	E2.32	63G	63G	50F
	80	E2.30	E2.31	E2.32	63G	63G	50F
	85	E2.30	E2.31	E2.32	63H	63H	50F

REVIEWED FOR CODE COMPLIANCE
OSHPD
OPM-0043-13
Reviewed by: Jeffrey Kikumoto
DATE: 06/23/2016
CALIFORNIA BUILDING CODE 2013

MASON WEST, INC.
1601 E. Miraloma Ave. Placentia, CA 92870
TEL (714) 630 - 0701, www.masonwest.com

Jiefu "Jeff" Zhang, SE
California SE No. S5270

CABLE TRAY

SEISMIC CABLE BRACING INSTALLATION REQUIREMENTS

LATERAL FORCE
Fp = 0.5g (ASD)
VERTICAL FORCE
Fpv = 0.375g (ASD)

Fp = 0.5g Fpv = 0.375g		STANDARD CABLE BRACING FOR 45° BRACE ANGLE BRACE SPACING - OPTION #1					
ELECTRICAL TRAY SUPPORT AT 10'-0" MAX.		INSTALLATION DETAILS					
		BRACE DIRECTION/SPACING			HANGER ATTACHMENT TYPE		BRACE ATTACHMENT TYPE
		TRANS./ 30 FT	LONG./ 60 FT	ALL-DIR./ 60 FT	TRANS./LONG. BRACE LOCATION	ALL-DIR. BRACE LOCATION	
WEIGHT (LBS/FT)	10	E2.10	E2.11	E2.12	38A	38A	38C
	20	E2.20	E2.21	E2.22	50C	50C	50E
	30	E2.20	E2.21	E2.22	50D	50D	50G

Fp = 0.5g Fpv = 0.375g		STANDARD CABLE BRACING FOR 45° BRACE ANGLE BRACE SPACING - OPTION #2					
ELECTRICAL TRAY SUPPORT AT 10'-0" MAX.		INSTALLATION DETAILS					
		BRACE DIRECTION/SPACING			HANGER ATTACHMENT TYPE		BRACE ATTACHMENT TYPE
		TRANS./ 20 FT	LONG./ 40 FT	ALL-DIR./ 40 FT	TRANS./LONG. BRACE LOCATION	ALL-DIR. BRACE LOCATION	
WEIGHT (LBS/FT)	10	E2.10	E2.11	E2.12	38A	38A	38B
	20	E2.10	E2.11	E2.12	38C	38C	38D
	30	E2.20	E2.21	E2.22	50D	50D	50E
	40	E2.20	E2.21	E2.22	50E	50E	50F
	45	E2.20	E2.21	E2.22	50E	50E	50G
	50	E2.30	E2.31	E2.32	63E	63E	50G

REVIEWED FOR CODE COMPLIANCE
OPM-0043-13
Reviewed by: K. Kikumoto
DATE: 06/23/2016
CALIFORNIA BUILDING CODE 2013

Fp = 0.5g Fpv = 0.375g		STANDARD CABLE BRACING FOR 45° BRACE ANGLE BRACE SPACING - OPTION #3					
ELECTRICAL TRAY SUPPORT AT 10'-0" MAX.		INSTALLATION DETAILS					
		BRACE DIRECTION/SPACING			HANGER ATTACHMENT TYPE		BRACE ATTACHMENT TYPE
		TRANS./ 10 FT	LONG./ 20 FT	ALL-DIR./ 20 FT	TRANS./LONG. BRACE LOCATION	ALL-DIR. BRACE LOCATION	
WEIGHT (LBS/FT)	10	E2.10	E2.11	E2.12	38A	38A	38A
	20	E2.10	E2.11	E2.12	38C	38C	38B
	30	E2.20	E2.21	E2.22	50D	50D	50C
	40	E2.20	E2.21	E2.22	50E	50E	50D
	45	E2.20	E2.21	E2.22	50E	50E	50D
	50	E2.30	E2.31	E2.32	63E	63E	50E
	60	E2.30	E2.31	E2.32	63F	63F	50E
	70	E2.30	E2.31	E2.32	63G	63G	50F
	80	E2.30	E2.31	E2.32	63G	63G	50F
	85	E2.30	E2.31	E2.32	63H	63H	50F

MASON WEST, INC.
1601 E. Miraloma Ave. Placentia, CA 92870
TEL (714) 630 - 0701, www.masonwest.com

Jiefu "Jeff" Zhang, SE
California SE No. S5270

PAGE
B5.4

CABLE TRAY

SEISMIC CABLE BRACING INSTALLATION REQUIREMENTS

LATERAL FORCE
Fp = 1.0g (ASD)
VERTICAL FORCE
Fpv = 0.375g (ASD)

Fp = 1g Fpv = 0.375g		STANDARD CABLE BRACING FOR 45° BRACE ANGLE BRACE SPACING - OPTION #1					
ELECTRICAL TRAY SUPPORT AT 10'-0" MAX.		INSTALLATION DETAILS					
		BRACE DIRECTION/SPACING			HANGER ATTACHMENT TYPE		BRACE ATTACHMENT TYPE
		TRANS./ 20 FT	LONG./ 40 FT	ALL-DIR./ 40 FT	TRANS./LONG. BRACE LOCATION	ALL-DIR. BRACE LOCATION	
WEIGHT (LBS/FT)	10	E2.10	E2.11	E2.12	38A	38A	38D
	20	E2.20	E2.21	E2.22	50C	50C	50F

Fp = 1g Fpv = 0.375g		STANDARD CABLE BRACING FOR 45° BRACE ANGLE BRACE SPACING - OPTION #2					
ELECTRICAL TRAY SUPPORT AT 10'-0" MAX.		INSTALLATION DETAILS					
		BRACE DIRECTION/SPACING			HANGER ATTACHMENT TYPE		BRACE ATTACHMENT TYPE
		TRANS./ 15 FT	LONG./ 30 FT	ALL-DIR./ 30 FT	TRANS./LONG. BRACE LOCATION	ALL-DIR. BRACE LOCATION	
WEIGHT (LBS/FT)	10	E2.10	E2.11	E2.12	38A	38A	38C
	20	E2.20	E2.21	E2.22	50C	50C	50E
	30	E2.20	E2.21	E2.22	50D	50D	50G

REVIEWED FOR CODE COMPLIANCE
OPM-0043-13
BY: Jeffrey Y. Kikumoto
DATE: 06/23/2016
CALIFORNIA BUILDING CODE 2013

Fp = 1g Fpv = 0.375g		STANDARD CABLE BRACING FOR 45° BRACE ANGLE BRACE SPACING - OPTION #3					
ELECTRICAL TRAY SUPPORT AT 10'-0" MAX.		INSTALLATION DETAILS					
		BRACE DIRECTION/SPACING			HANGER ATTACHMENT TYPE		BRACE ATTACHMENT TYPE
		TRANS./ 10 FT	LONG./ 20 FT	ALL-DIR./ 20 FT	TRANS./LONG. BRACE LOCATION	ALL-DIR. BRACE LOCATION	
WEIGHT (LBS/FT)	10	E2.10	E2.11	E2.12	38A	38A	38B
	20	E2.10	E2.11	E2.12	38C	38C	38D
	30	E2.20	E2.21	E2.22	50D	50D	50E
	40	E2.20	E2.21	E2.22	50E	50E	50F
	45	E2.20	E2.21	E2.22	50E	50E	50G
	50	E2.30	E2.31	E2.32	63E	63E	50G

MASON WEST, INC.
1601 E. Miraloma Ave. Placentia, CA 92870
TEL (714) 630 - 0701, www.masonwest.com

Jiefu "Jeff" Zhang, SE
California SE No. S5270

PAGE
B5.5

CABLE TRAY

SEISMIC CABLE X-PATTERN BRACING INSTALLATION REQUIREMENTS

LATERAL FORCE
Fp = 0.25g (ASD)
VERTICAL FORCE
Fpv = 0.375g (ASD)

Fp = 0.25g Fpv = 0.375g		X-PATTERN CABLE BRACING FOR 45° BRACE ANGLE BRACE SPACING - OPTION #1		
ELECTRICAL TRAY SUPPORT AT 10'-0" MAX.		INSTALLATION DETAILS		
		BRACE SPACING 40 FT	HANGER ATTACHMENT TYPE	BRACE ATTACHMENT TYPE
WEIGHT (LBS/FT)	10	E3.10	38A	38B
	20	E3.10	38C	38D
	30	E3.11	50D	50E
	40	E3.11	50E	50F
	45	E3.11	50E	50G
	50	E3.12	63E	50G

Fp = 0.25g Fpv = 0.375g		X-PATTERN CABLE BRACING FOR 45° BRACE ANGLE BRACE SPACING - OPTION #2		
ELECTRICAL TRAY SUPPORT AT 10'-0" MAX.		INSTALLATION DETAILS		
		BRACE SPACING 30 FT	HANGER ATTACHMENT TYPE	BRACE ATTACHMENT TYPE
WEIGHT (LBS/FT)	10	E3.10	38A	38B
	20	E3.10	38C	38C
	30	E3.11	50D	50D
	40	E3.11	50E	50E
	45	E3.11	50E	50E
	50	E3.12	63E	50F
	60	E3.12	63F	50G
	70	E3.12	63G	50G

OSHPD PREAPPROVED FOR CODE COMPLIANCE CALIFORNIA BUILDING CODE 2013
OPM-0043-13
BY: Jeffrey Y. Kikumoto
DATE: 06/23/2016

Fp = 0.25g Fpv = 0.375g		X-PATTERN CABLE BRACING FOR 45° BRACE ANGLE BRACE SPACING - OPTION #3		
ELECTRICAL TRAY SUPPORT AT 10'-0" MAX.		INSTALLATION DETAILS		
		BRACE SPACING 20 FT	HANGER ATTACHMENT TYPE	BRACE ATTACHMENT TYPE
WEIGHT (LBS/FT)	10	E3.10	38A	38A
	20	E3.10	38C	38B
	30	E3.11	50D	50C
	40	E3.11	50E	50D
	45	E3.11	50E	50D
	50	E3.12	63E	50E
	60	E3.12	63F	50E
	70	E3.12	63G	50F
	80	E3.12	63G	50F
	85	E3.12	63H	50F

MASON WEST, INC.
1601 E. Miraloma Ave. Placentia, CA 92870
TEL (714) 630 - 0701, www.masonwest.com

Jiefu "Jeff" Zhang, SE
California SE No. S5270

PAGE
B5.6

CABLE TRAY

SEISMIC CABLE X-PATTERN BRACING INSTALLATION REQUIREMENTS

LATERAL FORCE
Fp = 0.5g (ASD)
VERTICAL FORCE
Fpv = 0.375g (ASD)

Fp = 0.5g Fpv = 0.375g		X-PATTERN CABLE BRACING FOR 45° BRACE ANGLE BRACE SPACING - OPTION #1		
ELECTRICAL TRAY SUPPORT AT 10'-0" MAX.		INSTALLATION DETAILS		
		BRACE SPACING 30 FT	HANGER ATTACHMENT TYPE	BRACE ATTACHMENT TYPE
WEIGHT (LBS/FT)	10	E3.10	38A	38C
	20	E3.11	50C	50E
	30	E3.11	50D	50G

Fp = 0.5g Fpv = 0.375g		X-PATTERN CABLE BRACING FOR 45° BRACE ANGLE BRACE SPACING - OPTION #2		
ELECTRICAL TRAY SUPPORT AT 10'-0" MAX.		INSTALLATION DETAILS		
		BRACE SPACING 20 FT	HANGER ATTACHMENT TYPE	BRACE ATTACHMENT TYPE
WEIGHT (LBS/FT)	10	E3.10	38A	38B
	20	E3.10	38C	38D
	30	E3.11	50D	50E
	40	E3.11	50E	50F
	45	E3.11	50E	50G
	50	E3.12	63E	50G

OSHPD
PREAPPROVED FOR CODE COMPLIANCE
OPM-0043-13
BY: Jeffrey Y. Kikumoto
DATE: 06/23/2016
CALIFORNIA BUILDING CODE 2013

Fp = 0.5g Fpv = 0.375g		X-PATTERN CABLE BRACING FOR 45° BRACE ANGLE BRACE SPACING - OPTION #3		
ELECTRICAL TRAY SUPPORT AT 10'-0" MAX.		INSTALLATION DETAILS		
		BRACE SPACING 10 FT	HANGER ATTACHMENT TYPE	BRACE ATTACHMENT TYPE
WEIGHT (LBS/FT)	10	E3.10	38A	38A
	20	E3.10	38C	38B
	30	E3.11	50D	50C
	40	E3.11	50E	50D
	45	E3.11	50E	50D
	50	E3.12	63E	50E
	60	E3.12	63F	50E
	70	E3.12	63G	50F
	80	E3.12	63G	50F
	85	E3.12	63H	50F

MASON WEST, INC.
1601 E. Miraloma Ave. Placentia, CA 92870
TEL (714) 630 - 0701, www.masonwest.com

Jiefu "Jeff" Zhang, SE
California SE No. S5270

PAGE
B5.7

CABLE TRAY	SEISMIC CABLE X-PATTERN BRACING INSTALLATION REQUIREMENTS	LATERAL FORCE Fp = 1.0g (ASD) VERTICAL FORCE Fpv = 0.375g (ASD)

Fp = 1g Fpv = 0.375g		X-PATTERN CABLE BRACING FOR 45° BRACE ANGLE BRACE SPACING - OPTION #1		
ELECTRICAL TRAY SUPPORT AT 10'-0" MAX.		INSTALLATION DETAILS		
		BRACE SPACING 20 FT	HANGER ATTACHMENT TYPE	BRACE ATTACHMENT TYPE
WEIGHT (LBS/FT)	10	E3.10	38A	38D
	20	E3.11	50C	50F

Fp = 1g Fpv = 0.375g		X-PATTERN CABLE BRACING FOR 45° BRACE ANGLE BRACE SPACING - OPTION #2		
ELECTRICAL TRAY SUPPORT AT 10'-0" MAX.		INSTALLATION DETAILS		
		BRACE SPACING 15 FT	HANGER ATTACHMENT TYPE	BRACE ATTACHMENT TYPE
WEIGHT (LBS/FT)	10	E3.10	38A	38C
	20	E3.11	50C	50E
	30	E3.11	50D	50G

OSHPD PREAPPROVED FOR CODE COMPLIANCE OPM-0043-13 BY: Jeffrey Y. Kikumoto DATE: 06/23/2016 CALIFORNIA BUILDING CODE 2013

Fp = 1g Fpv = 0.375g		X-PATTERN CABLE BRACING FOR 45° BRACE ANGLE BRACE SPACING - OPTION #3		
ELECTRICAL TRAY SUPPORT AT 10'-0" MAX.		INSTALLATION DETAILS		
		BRACE SPACING 10 FT	HANGER ATTACHMENT TYPE	BRACE ATTACHMENT TYPE
WEIGHT (LBS/FT)	10	E3.10	38A	38B
	20	E3.10	38C	38D
	30	E3.11	50D	50E
	40	E3.11	50E	50F
	45	E3.11	50E	50G
	50	E3.12	63E	50G

MASON WEST, INC.
1601 E. Miraloma Ave. Placentia, CA 92870
TEL (714) 630 - 0701, www.masonwest.com

Jiefu "Jeff" Zhang, SE
California SE No. S5270

PAGE
B5.8

HANGER ROD DIAMETER = ⅜"

PIPING/CONDUIT TRANSVERSE SEISMIC SOLID BRACING SYSTEM 2"Ø PIPE/CONDUIT MAX

KIT OPTIONS
S12T
S1220T
SH312T
SH320T

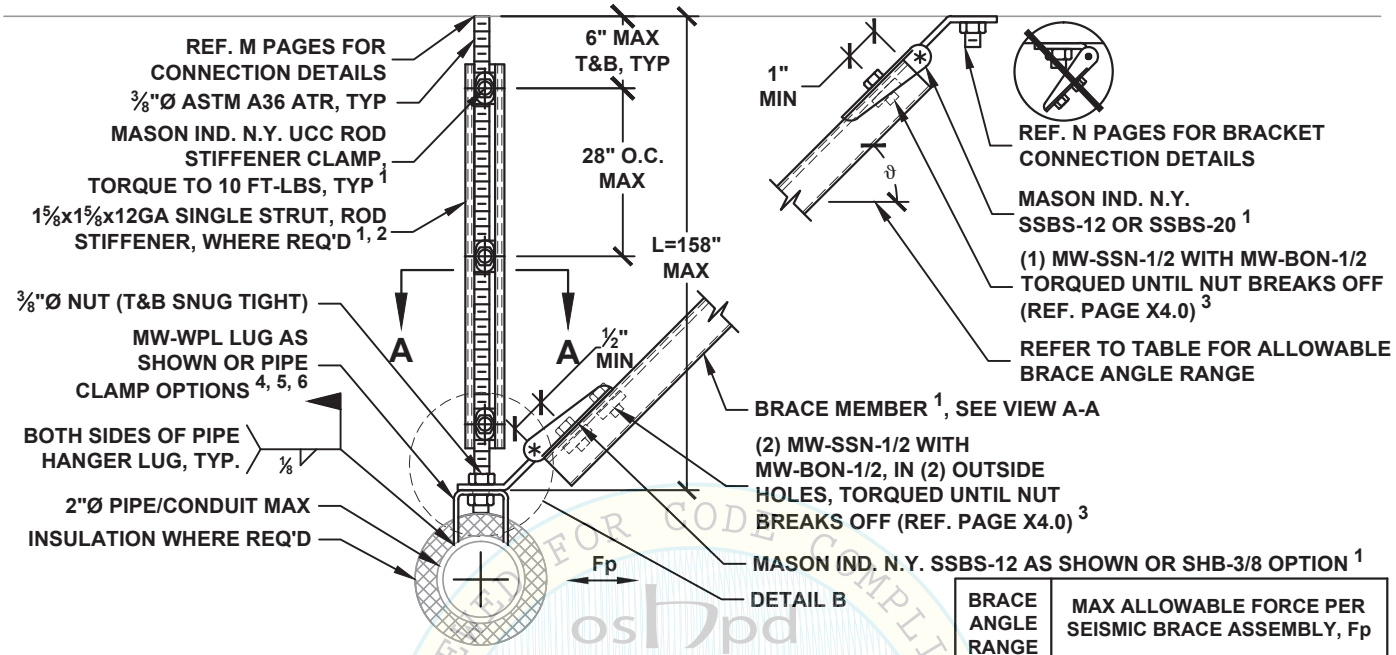

BRACE ANGLE RANGE ϑ	MAX ALLOWABLE FORCE PER SEISMIC BRACE ASSEMBLY, Fp		
	WPL	SPC (STL*)	SPC (CI**)
30° - 45°	170 LBS	320 LBS	60 LBS
46° - 60°	170 LBS	220 LBS	60 LBS

* STL = STEEL PIPING
** CI = CAST IRON PIPING

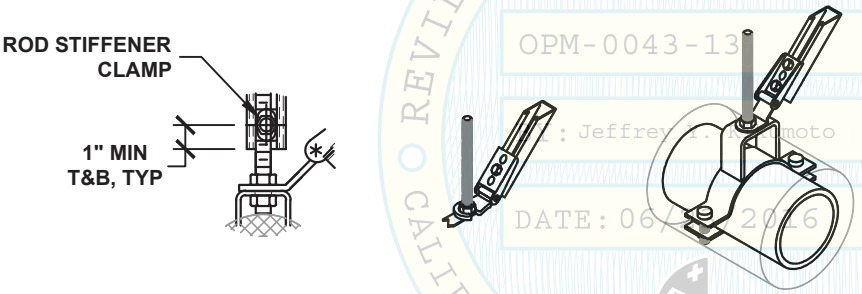

DETAIL B **SHB OPTION** **SPC OPTION**

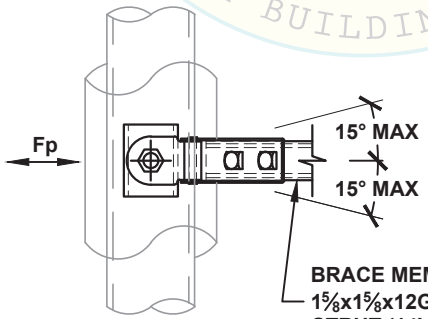

VIEW A-A

NOTES:

1. REF. SECTION A10 OR A20 FOR GENERAL NOTES.
2. PROVIDE ROD STIFFENING ONLY WHERE SEISMIC BRACKETS ARE ATTACHED TO THE ROD AND ROD LENGTH (L) EXCEEDS 18". REF. APPROPRIATE M10 PAGES FOR DETAIL.
3. WHEN THE BRACE IS INSTALLED INSIDE OF THE BRACE BRACKET, ONLY THE CENTER MOUNTING HOLE IS REQUIRED TO BE FASTENED, REF X2.3 FOR CONNECTION DETAILS.
4. FOR PIPE/CONDUIT SIZES UP TO 2"Ø MAX, USE RESPECTIVE MW-SPC SIZE (REF. X8.3-X8.3.1) OR USE MW-WPL-38 (REF. X8.4).
5. REF. SECTION A15 OR A25 FOR ALTERNATIVE ARRANGEMENT OF SEISMIC BRACES.
6. REF. PAGE A19.0 OR A28.0 FOR PIPE/CONDUIT CLAMP OPTION.

OSHPD REVIEWED FOR CODE COMPLIANCE CALIFORNIA BUILDING CODE 2013
OPM-0043-13
Jeffrey Kikumoto
DATE: 06/ /2016

MASON WEST, INC.
1601 E. Miraloma Ave. Placentia, CA 92870
TEL (714) 630 - 0701, www.masonwest.com

Jiefu "Jeff" Zhang, SE
California SE No. S5270

PAGE
C1.10

HANGER ROD DIAMETER = 3/8"

PIPING/CONDUIT LONGITUDINAL SEISMIC SOLID BRACING SYSTEM 2"Ø PIPE/CONDUIT MAX

KIT OPTIONS
S12L
S1220L
SH312L
SH320L

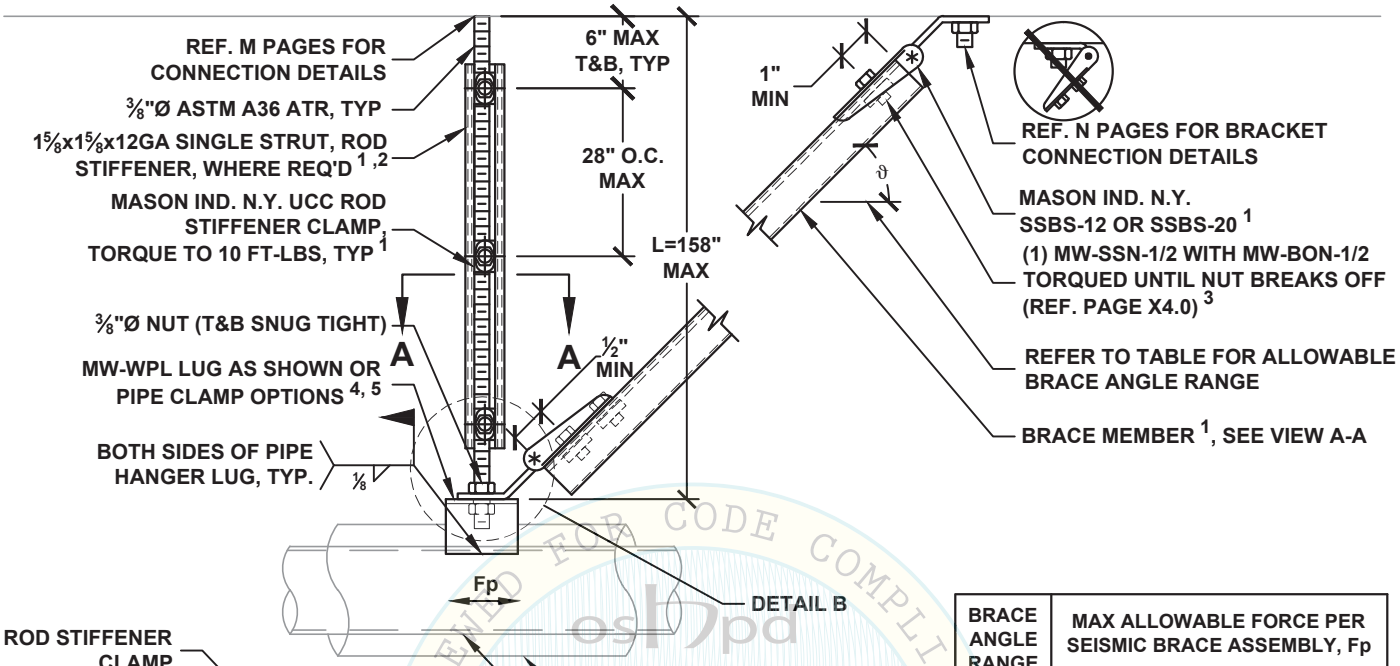

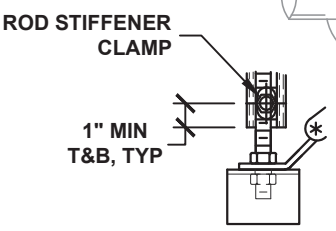

DETAIL B

BRACE ANGLE RANGE ϑ	MAX ALLOWABLE FORCE PER SEISMIC BRACE ASSEMBLY, Fp		
	WPL	SPC (STL*)	SPC (CI**)
30° - 45°	425 LBS	150 LBS	290 LBS
46° - 60°	245 LBS	150 LBS	220 LBS

* STL = STEEL PIPING
** CI = CAST IRON PIPING

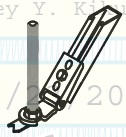

SHB OPTION

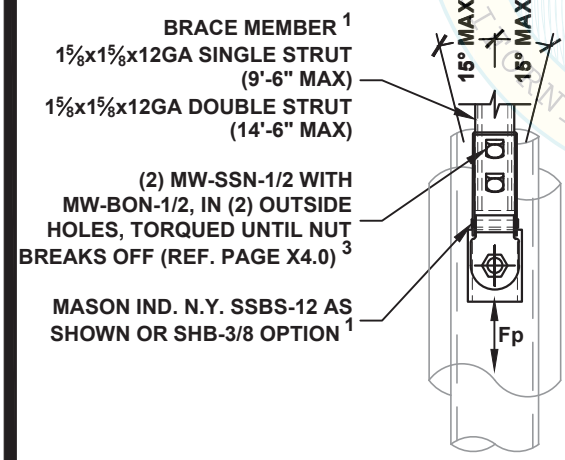

VIEW A-A

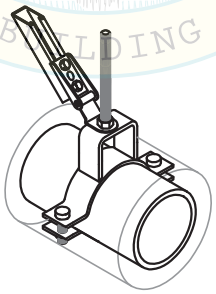

SPC OPTION

NOTES:

1. REF. SECTION A10 OR A20 FOR GENERAL NOTES.
2. PROVIDE ROD STIFFENING ONLY WHERE SEISMIC BRACKETS ARE ATTACHED TO THE ROD AND ROD LENGTH (L) EXCEEDS 18". REF. APPROPRIATE M10 PAGES FOR DETAIL.
3. WHEN THE BRACE IS INSTALLED INSIDE OF THE BRACE BRACKET, ONLY THE CENTER MOUNTING HOLE IS REQUIRED TO BE FASTENED, REF X2.3 FOR CONNECTION DETAILS.
4. FOR PIPE/CONDUIT SIZES UP TO 2"Ø MAX, USE RESPECTIVE MW-SPC SIZE (REF. X8.3-X8.3.1) OR USE MW-WPL-38 (REF. X8.4).
5. REF. PAGE A19.0 OR A28.0 FOR PIPE/CONDUIT CLAMP OPTION.

osHpd
OPM-0043-13
BY: Jeffrey Y. Kikumoto
DATE: 06/23/2016
REVIEWED FOR CODE COMPLIANCE
CALIFORNIA BUILDING CODE 2013

MASON WEST, INC.
1601 E. Miraloma Ave. Placentia, CA 92870
TEL (714) 630 - 0701, www.masonwest.com

Jiefu "Jeff" Zhang, SE
California SE No. S5270

PAGE
C1.11

HANGER ROD DIAMETER = ⅜"

PIPING/CONDUIT ALL-DIRECTIONAL SEISMIC SOLID BRACING SYSTEM 2"Ø PIPE/CONDUIT MAX

KIT OPTIONS
S12A
S1220A
SH312A
SH320A

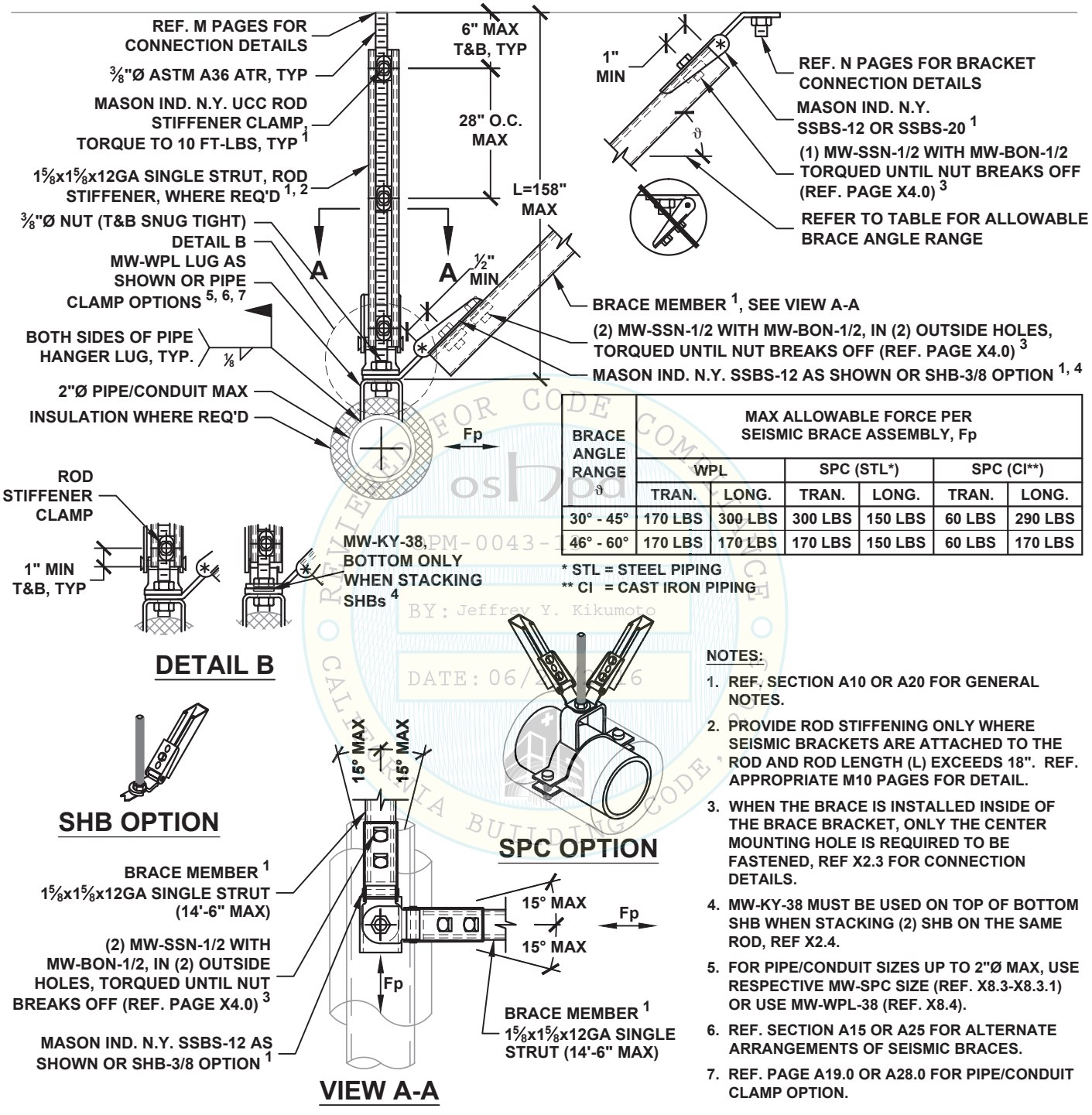

BRACE ANGLE RANGE ϑ	MAX ALLOWABLE FORCE PER SEISMIC BRACE ASSEMBLY, Fp					
	WPL		SPC (STL*)		SPC (CI**)	
	TRAN.	LONG.	TRAN.	LONG.	TRAN.	LONG.
30° - 45°	170 LBS	300 LBS	300 LBS	150 LBS	60 LBS	290 LBS
46° - 60°	170 LBS	170 LBS	170 LBS	150 LBS	60 LBS	170 LBS

* STL = STEEL PIPING
** CI = CAST IRON PIPING

OSHPD REVIEWED FOR CODE COMPLIANCE OPM-0043-13 BY: Jeffrey Y. Kikumoto DATE: 06/23/2016 CALIFORNIA BUILDING CODE

NOTES:

1. REF. SECTION A10 OR A20 FOR GENERAL NOTES.
2. PROVIDE ROD STIFFENING ONLY WHERE SEISMIC BRACKETS ARE ATTACHED TO THE ROD AND ROD LENGTH (L) EXCEEDS 18". REF. APPROPRIATE M10 PAGES FOR DETAIL.
3. WHEN THE BRACE IS INSTALLED INSIDE OF THE BRACE BRACKET, ONLY THE CENTER MOUNTING HOLE IS REQUIRED TO BE FASTENED, REF X2.3 FOR CONNECTION DETAILS.
4. MW-KY-38 MUST BE USED ON TOP OF BOTTOM SHB WHEN STACKING (2) SHB ON THE SAME ROD, REF X2.4.
5. FOR PIPE/CONDUIT SIZES UP TO 2"Ø MAX, USE RESPECTIVE MW-SPC SIZE (REF. X8.3-X8.3.1) OR USE MW-WPL-38 (REF. X8.4).
6. REF. SECTION A15 OR A25 FOR ALTERNATE ARRANGEMENTS OF SEISMIC BRACES.
7. REF. PAGE A19.0 OR A28.0 FOR PIPE/CONDUIT CLAMP OPTION.

MASON WEST, INC.
1601 E. Miraloma Ave. Placentia, CA 92870
TEL (714) 630 - 0701, www.masonwest.com

Jiefu "Jeff" Zhang, SE
California SE No. S5270

PAGE
C1.12

HANGER ROD DIAMETER = ½"

PIPING/CONDUIT TRANSVERSE SEISMIC SOLID BRACING SYSTEM 3"Ø PIPE/CONDUIT MAX

KIT OPTIONS
S12T
S1220T
SH412T
SH420T

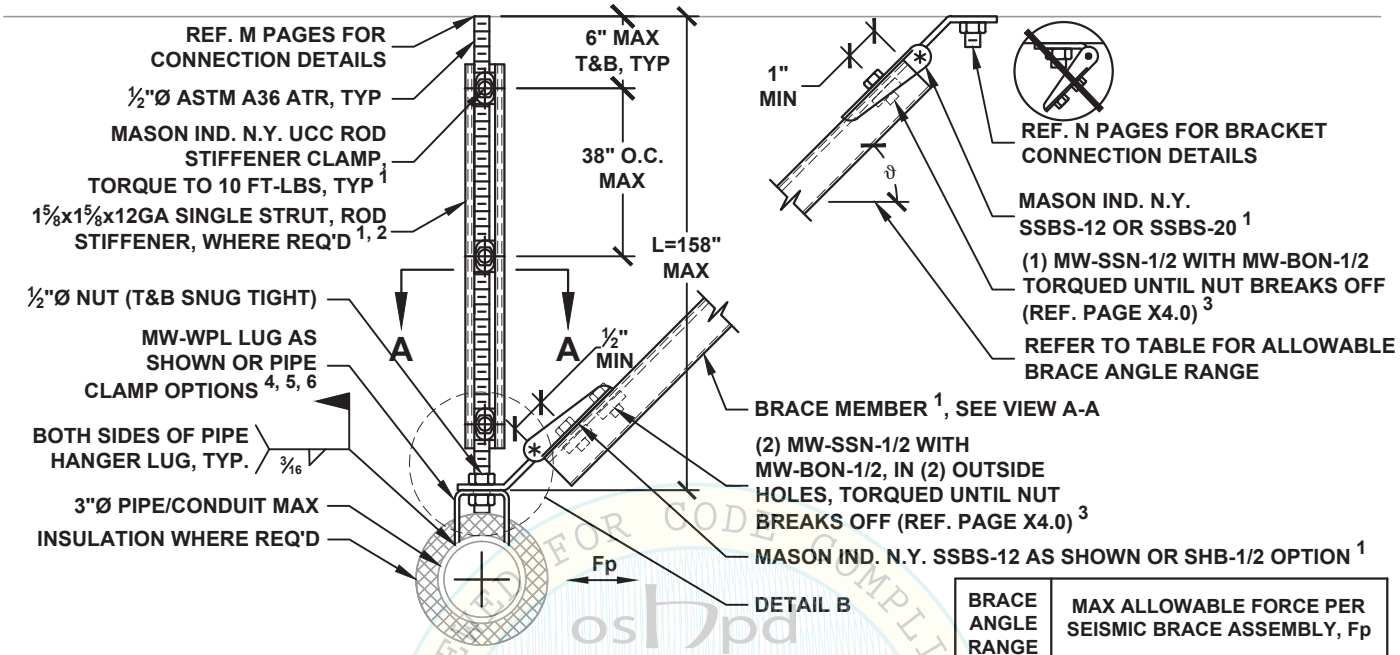

BRACE ANGLE RANGE ϑ	MAX ALLOWABLE FORCE PER SEISMIC BRACE ASSEMBLY, Fp		
	WPL	SPC (STL*)	SPC (CI**)
30° - 45°	350 LBS	460 LBS	220 LBS
46° - 60°	350 LBS	410 LBS	220 LBS

* STL = STEEL PIPING
** CI = CAST IRON PIPING

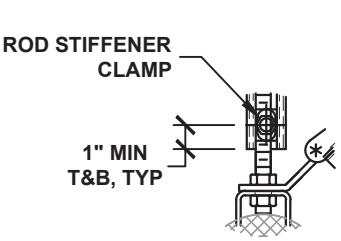

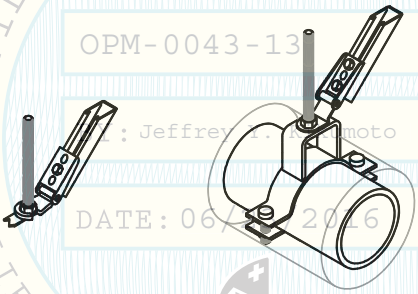

DETAIL B **SHB OPTION** **SPC OPTION**

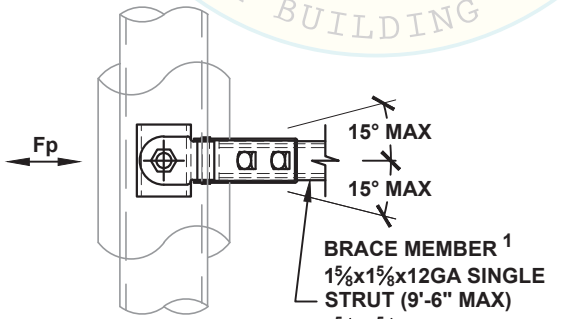

VIEW A-A

NOTES:

1. REF. SECTION A10 OR A20 FOR GENERAL NOTES.
2. PROVIDE ROD STIFFENING ONLY WHERE SEISMIC BRACKETS ARE ATTACHED TO THE ROD AND ROD LENGTH (L) EXCEEDS 25". REF. APPROPRIATE M10 PAGES FOR DETAIL.
3. WHEN THE BRACE IS INSTALLED INSIDE OF THE BRACE BRACKET, ONLY THE CENTER MOUNTING HOLE IS REQUIRED TO BE FASTENED, REF X2.3 FOR CONNECTION DETAILS.
4. FOR PIPE/CONDUIT SIZES UP TO 3"Ø MAX, USE RESPECTIVE MW-SPC SIZE (REF. X8.3-X8.3.1) OR USE MW-WPL-50 (REF. X8.4).
5. REF. SECTION A15 OR A25 FOR ALTERNATIVE ARRANGEMENT OF SEISMIC BRACES.
6. REF. PAGE A19.0 OR A28.0 FOR PIPE/CONDUIT CLAMP OPTION.

OSHPD OPM-0043-13 REVIEWED FOR CODE COMPLIANCE BY: Jeffrey Kikumoto DATE: 06/23/2016 CALIFORNIA BUILDING CODE 2013

MASON WEST, INC.
1601 E. Miraloma Ave. Placentia, CA 92870
TEL (714) 630 - 0701, www.masonwest.com

Jiefu "Jeff" Zhang, SE
California SE No. S5270

PAGE
C1.20

HANGER ROD DIAMETER = ½"	PIPING/CONDUIT LONGITUDINAL SEISMIC SOLID BRACING SYSTEM 3"Ø PIPE/CONDUIT MAX	KIT OPTIONS S12L S1220L SH412L SH420L

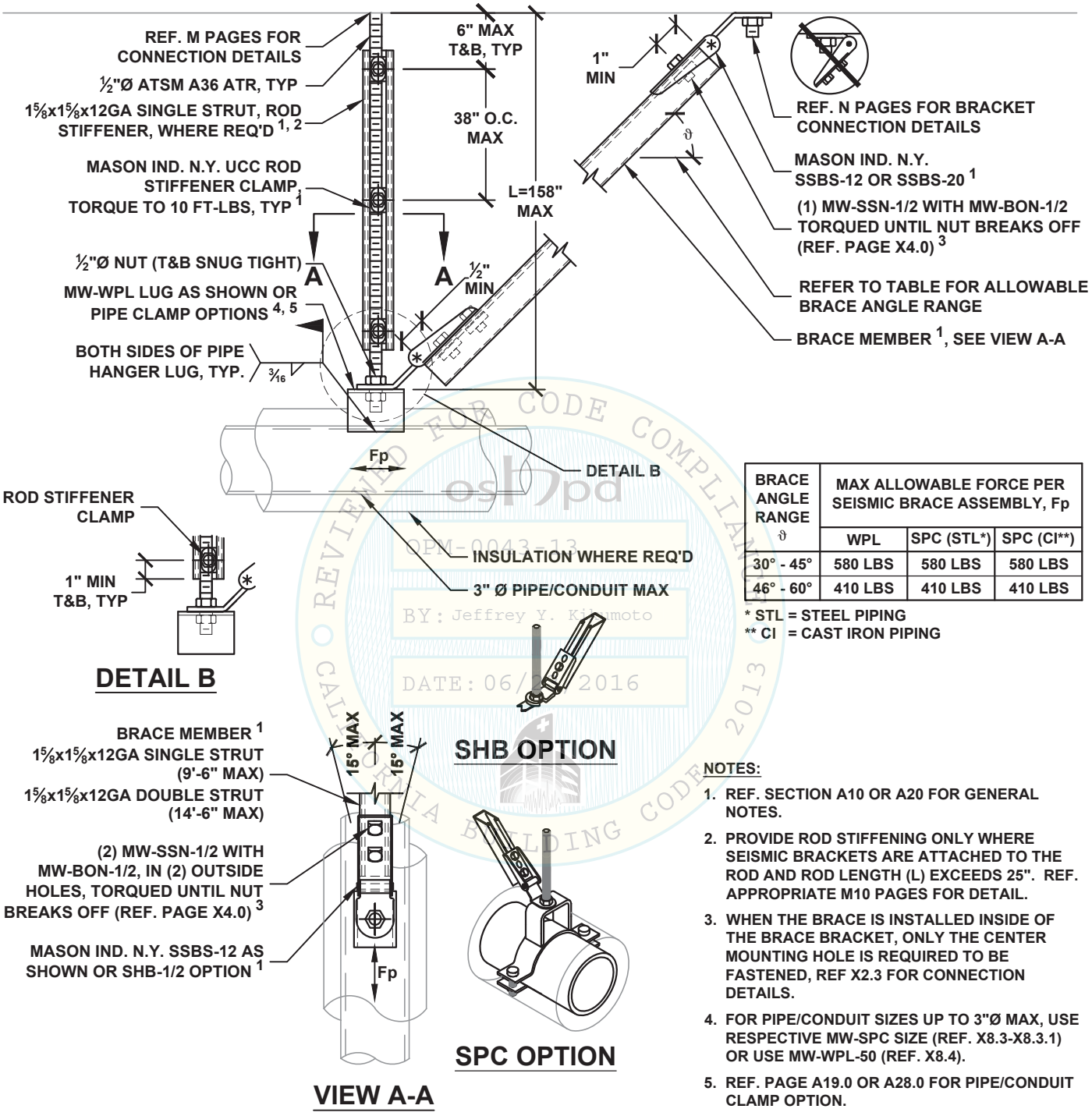

DETAIL B

BRACE ANGLE RANGE ϑ	MAX ALLOWABLE FORCE PER SEISMIC BRACE ASSEMBLY, Fp		
	WPL	SPC (STL*)	SPC (CI**)
30° - 45°	580 LBS	580 LBS	580 LBS
46° - 60°	410 LBS	410 LBS	410 LBS

* STL = STEEL PIPING
** CI = CAST IRON PIPING

VIEW A-A

SHB OPTION

SPC OPTION

NOTES:

1. REF. SECTION A10 OR A20 FOR GENERAL NOTES.
2. PROVIDE ROD STIFFENING ONLY WHERE SEISMIC BRACKETS ARE ATTACHED TO THE ROD AND ROD LENGTH (L) EXCEEDS 25". REF. APPROPRIATE M10 PAGES FOR DETAIL.
3. WHEN THE BRACE IS INSTALLED INSIDE OF THE BRACE BRACKET, ONLY THE CENTER MOUNTING HOLE IS REQUIRED TO BE FASTENED, REF X2.3 FOR CONNECTION DETAILS.
4. FOR PIPE/CONDUIT SIZES UP TO 3"Ø MAX, USE RESPECTIVE MW-SPC SIZE (REF. X8.3-X8.3.1) OR USE MW-WPL-50 (REF. X8.4).
5. REF. PAGE A19.0 OR A28.0 FOR PIPE/CONDUIT CLAMP OPTION.

CALIFORNIA BUILDING CODE 2013 · REVIEWED FOR CODE COMPLIANCE · oshpd · OPM-0043-13 · BY: Jeffrey Y. Kikumoto · DATE: 06/23/2016

MASON WEST, INC.
1601 E. Miraloma Ave. Placentia, CA 92870
TEL (714) 630 - 0701, www.masonwest.com

Jiefu "Jeff" Zhang, SE
California SE No. S5270

PAGE
C1.21

HANGER ROD DIAMETER = ½"

PIPING/CONDUIT ALL-DIRECTIONAL SEISMIC SOLID BRACING SYSTEM 3"Ø PIPE/CONDUIT MAX

KIT OPTIONS
S12A
S1220A
SH412A
SH420A

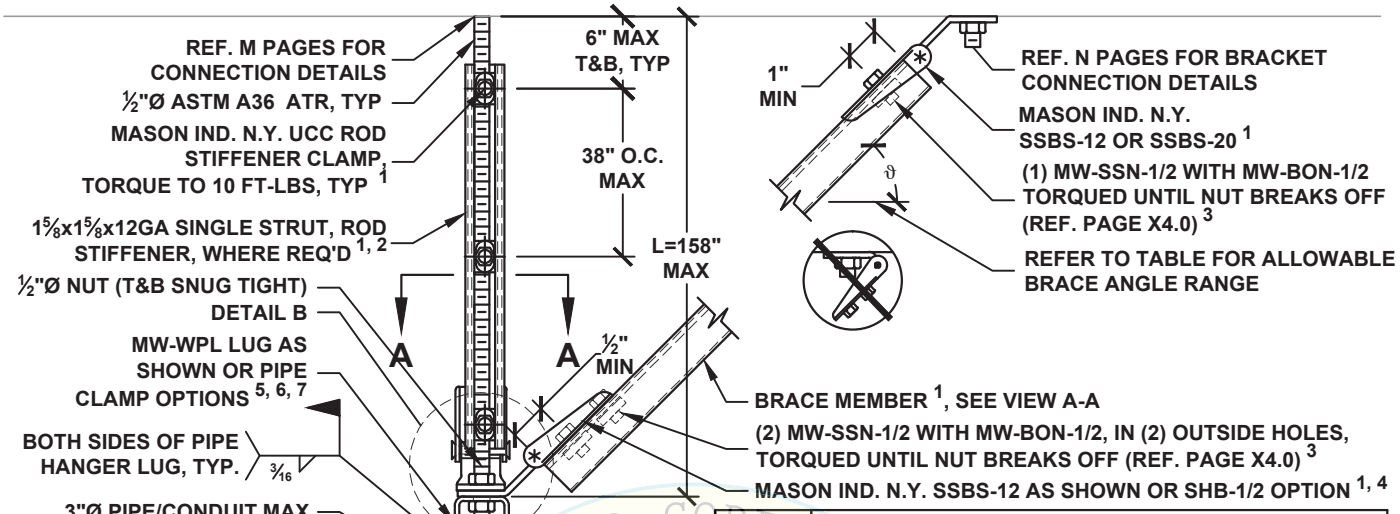

BRACE ANGLE RANGE ϑ	MAX ALLOWABLE FORCE PER SEISMIC BRACE ASSEMBLY, Fp					
	WPL		SPC (STL*)		SPC (CI**)	
	TRAN.	LONG.	TRAN.	LONG.	TRAN.	LONG.
30° - 45°	350 LBS	500 LBS	460 LBS	500 LBS	220 LBS	500 LBS
46° - 60°	290 LBS	290 LBS	290 LBS	290 LBS	220 LBS	500 LBS

* STL = STEEL PIPING
** CI = CAST IRON PIPING

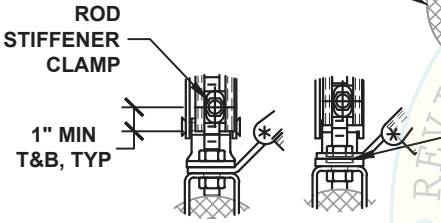

DETAIL B

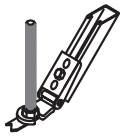

SHB OPTION

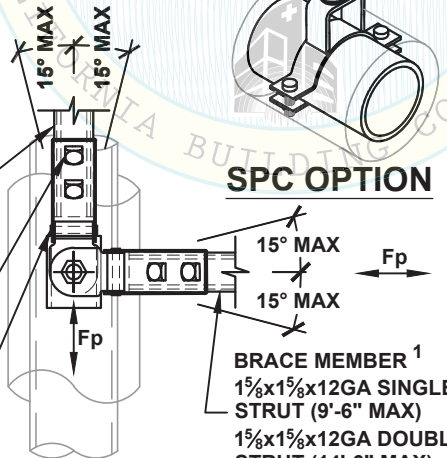

VIEW A-A

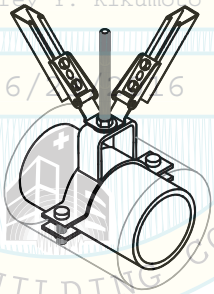

SPC OPTION

NOTES:

1. REF. SECTION A10 OR A20 FOR GENERAL NOTES.
2. PROVIDE ROD STIFFENING ONLY WHERE SEISMIC BRACKETS ARE ATTACHED TO THE ROD AND ROD LENGTH (L) EXCEEDS 25". REF. APPROPRIATE M10 PAGES FOR DETAIL.
3. WHEN THE BRACE IS INSTALLED INSIDE OF THE BRACE BRACKET, ONLY THE CENTER MOUNTING HOLE IS REQUIRED TO BE FASTENED, REF X2.3 FOR CONNECTION DETAILS.
4. MW-KY-38 MUST BE USED ON TOP OF BOTTOM SHB WHEN STACKING (2) SHB ON THE SAME ROD, REF X2.4.
5. FOR PIPE/CONDUIT SIZES UP TO 3"Ø MAX, USE RESPECTIVE MW-SPC SIZE (REF. X8.3-X8.3.1) OR USE MW-WPL-50 (REF. X8.4).
6. REF. SECTION A15 OR A25 FOR ALTERNATE ARRANGEMENTS OF SEISMIC BRACES.
7. REF. PAGE A19.0 OR A28.0 FOR PIPE/CONDUIT CLAMP OPTION.

REVIEWED FOR CODE COMPLIANCE
OPM-0043-13
BY: Jeffrey Y. Kikumoto
DATE: 06/23/2016
CALIFORNIA BUILDING CODE

MASON WEST, INC.
1601 E. Miraloma Ave. Placentia, CA 92870
TEL (714) 630 - 0701, www.masonwest.com

Jiefu "Jeff" Zhang, SE
California SE No. S5270

PAGE
C1.22

HANGER ROD DIAMETER = 5/8"

PIPING/CONDUIT TRANSVERSE SEISMIC SOLID BRACING SYSTEM 5"Ø PIPE/CONDUIT MAX

KIT OPTIONS
S20T
S2012T
SH512T
SH520T

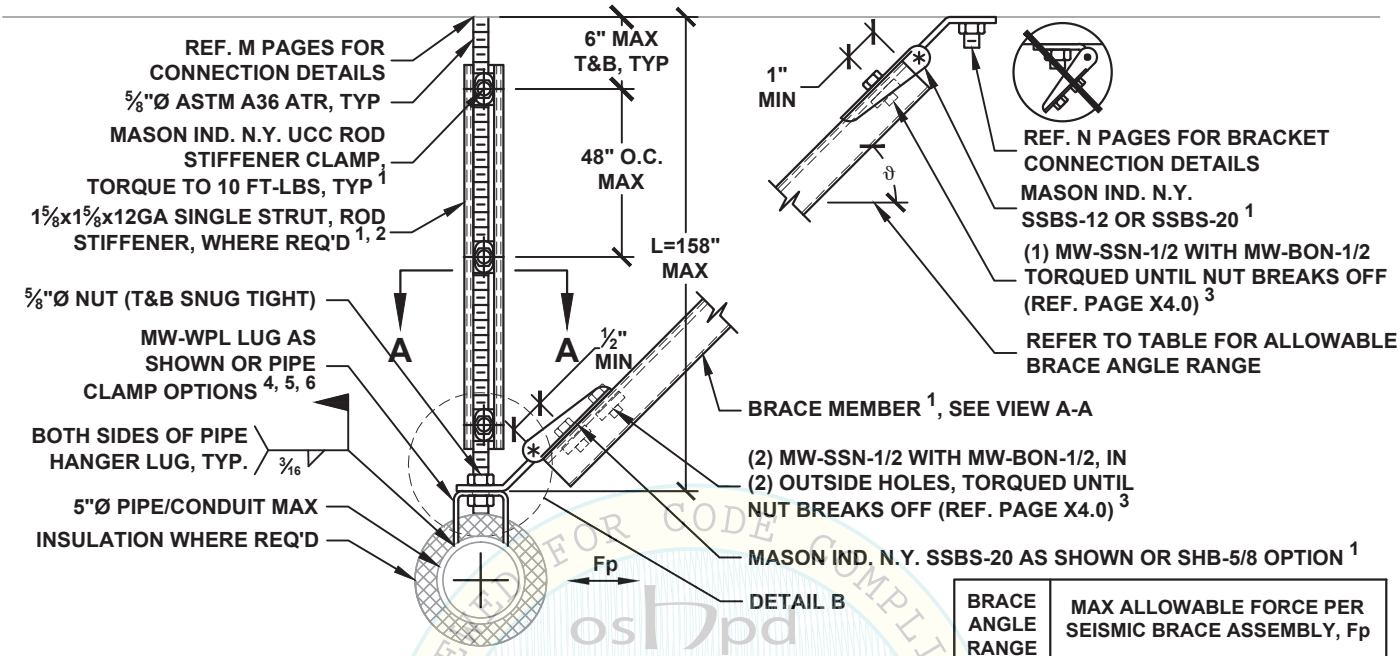

BRACE ANGLE RANGE ϑ	MAX ALLOWABLE FORCE PER SEISMIC BRACE ASSEMBLY, Fp		
	WPL	SPC (STL*)	SPC (CI**)
30° - 45°	580 LBS	300 LBS	270 LBS
46° - 60°	410 LBS	300 LBS	270 LBS

* STL = STEEL PIPING
** CI = CAST IRON PIPING

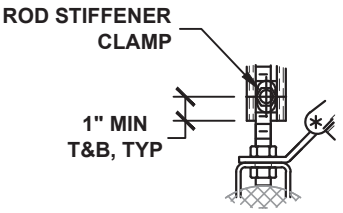

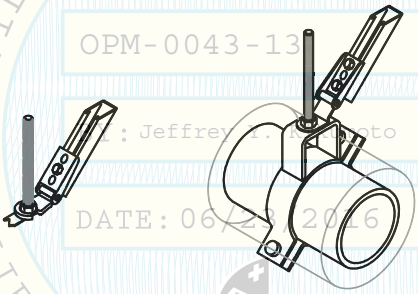

DETAIL B **SHB OPTION** **SPC OPTION**

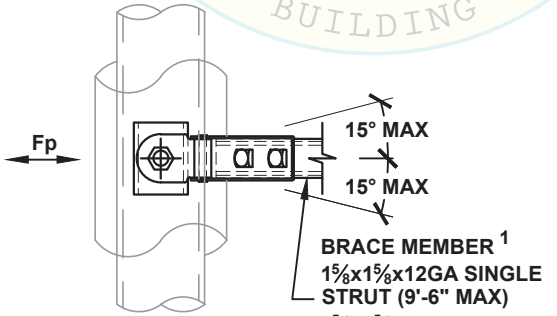

VIEW A-A

NOTES:

1. REF. SECTION A10 OR A20 FOR GENERAL NOTES.
2. PROVIDE ROD STIFFENING ONLY WHERE SEISMIC BRACKETS ARE ATTACHED TO THE ROD AND ROD LENGTH (L) EXCEEDS 31". REF. APPROPRIATE M10 PAGES FOR DETAIL.
3. WHEN THE BRACE IS INSTALLED INSIDE OF THE BRACE BRACKET, ONLY THE CENTER MOUNTING HOLE IS REQUIRED TO BE FASTENED, REF X2.3 FOR CONNECTION DETAILS.
4. FOR PIPE/CONDUIT SIZES UP TO 5"Ø MAX, USE RESPECTIVE MW-SPC SIZE (REF. X8.3-X8.3.1) OR USE MW-WPL-63 (REF. X8.4).
5. REF. SECTION A15 OR A25 FOR ALTERNATIVE ARRANGEMENT OF SEISMIC BRACES.
6. REF. PAGE A19.0 OR A28.0 FOR PIPE/CONDUIT CLAMP OPTION.

OSHPD
OPM-0043-13
DATE: 06/23/2016
REVIEWED FOR CODE COMPLIANCE
CALIFORNIA BUILDING CODE 2013

MASON WEST, INC.
1601 E. Miraloma Ave. Placentia, CA 92870
TEL (714) 630 - 0701, www.masonwest.com

Jiefu "Jeff" Zhang, SE
California SE No. S5270

PAGE
C1.30

HANGER ROD DIAMETER = 5/8"	PIPING/CONDUIT TRANSVERSE SEISMIC SOLID BRACING SYSTEM 5"Ø PIPE/CONDUIT MAX	KIT OPTIONS SH5T

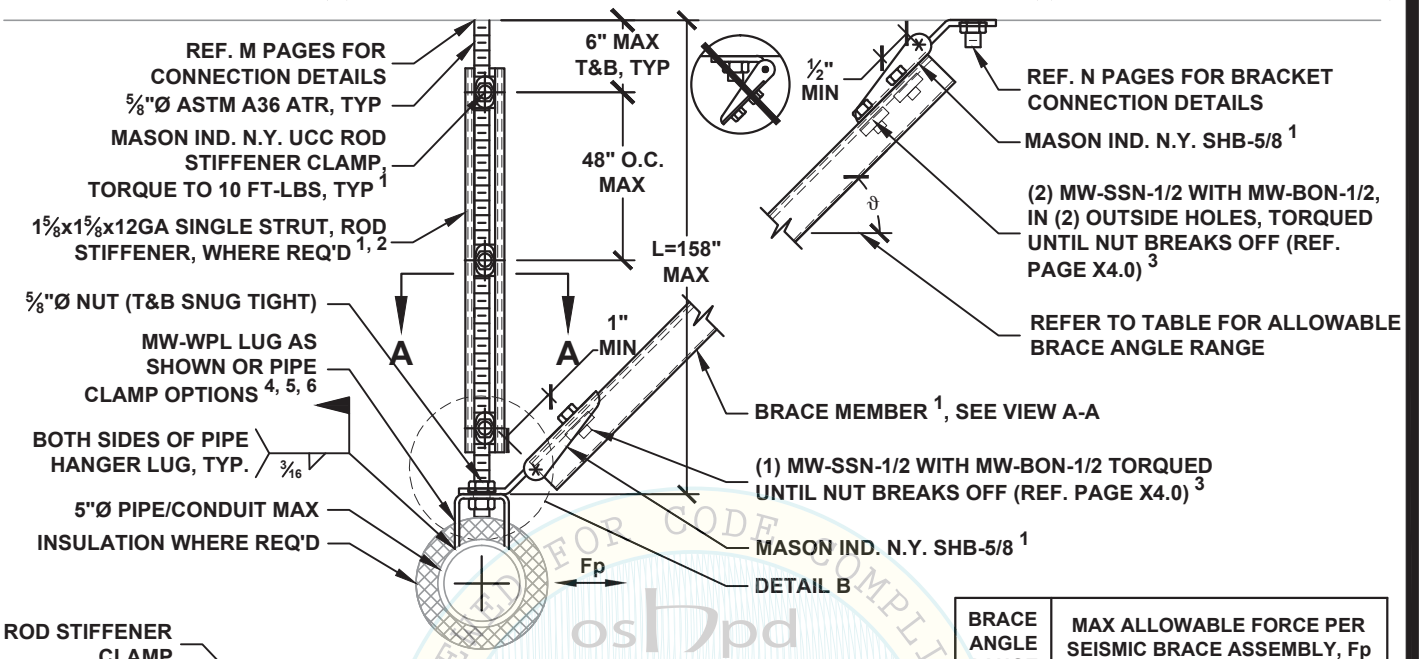

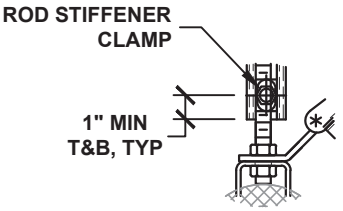

DETAIL B

BRACE ANGLE RANGE ϑ	MAX ALLOWABLE FORCE PER SEISMIC BRACE ASSEMBLY, Fp		
	WPL	SPC (STL*)	SPC (CI**)
30° - 45°	750 LBS	300 LBS	270 LBS
46° - 60°	575 LBS	300 LBS	270 LBS

* STL = STEEL PIPING
** CI = CAST IRON PIPING

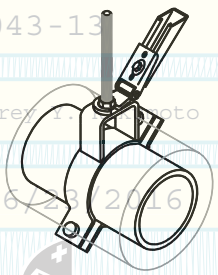

SPC OPTION

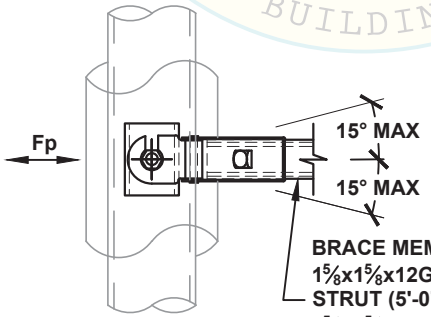

VIEW A-A

NOTES:

1. REF. SECTION A10 OR A20 FOR GENERAL NOTES.
2. PROVIDE ROD STIFFENING ONLY WHERE SEISMIC BRACKETS ARE ATTACHED TO THE ROD AND ROD LENGTH (L) EXCEEDS 31". REF. APPROPRIATE M10 PAGES FOR DETAIL.
3. WHEN THE BRACE IS INSTALLED INSIDE OF THE BRACE BRACKET, ONLY THE CENTER MOUNTING HOLE IS REQUIRED TO BE FASTENED, REF X2.3 FOR CONNECTION DETAILS.
4. FOR PIPE/CONDUIT SIZES UP TO 5"Ø MAX, USE RESPECTIVE MW-SPC SIZE (REF. X8.3-X8.3.1) OR USE MW-WPL-63 (REF. X8.4).
5. REF. SECTION A15 OR A25 FOR ALTERNATE ARRANGEMENTS OF SEISMIC BRACES.
6. REF. PAGE A19.0 OR A28.0 FOR PIPE/CONDUIT CLAMP OPTION.

REVIEWED FOR CODE COMPLIANCE
CALIFORNIA BUILDING CODE 2013
oshpd
OPM-0043-13
BY: Jeffrey Kikumoto
DATE: 06/23/2016

MASON WEST, INC.
1601 E. Miraloma Ave. Placentia, CA 92870
TEL (714) 630 - 0701, www.masonwest.com

Jiefu "Jeff" Zhang, SE
California SE No. S5270

PAGE
C1.31

HANGER ROD DIAMETER = 5/8"

PIPING/CONDUIT LONGITUDINAL SEISMIC SOLID BRACING SYSTEM 5"Ø PIPE/CONDUIT MAX

KIT OPTIONS
S20L
S2012L
SH512L
SH520L

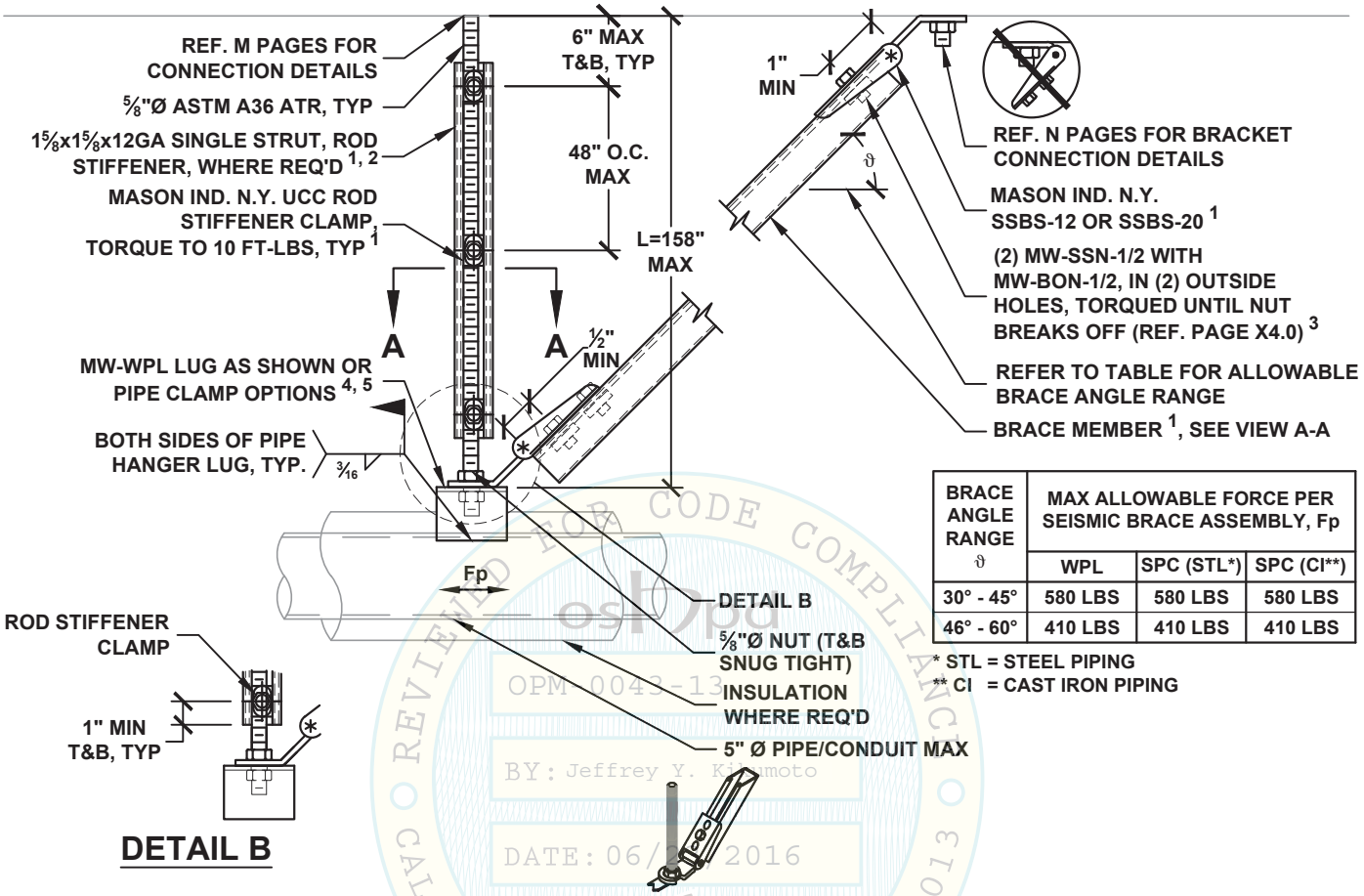

BRACE ANGLE RANGE ϑ	MAX ALLOWABLE FORCE PER SEISMIC BRACE ASSEMBLY, Fp		
	WPL	SPC (STL*)	SPC (CI**)
30° - 45°	580 LBS	580 LBS	580 LBS
46° - 60°	410 LBS	410 LBS	410 LBS

* STL = STEEL PIPING
** CI = CAST IRON PIPING

DETAIL B

SHB OPTION

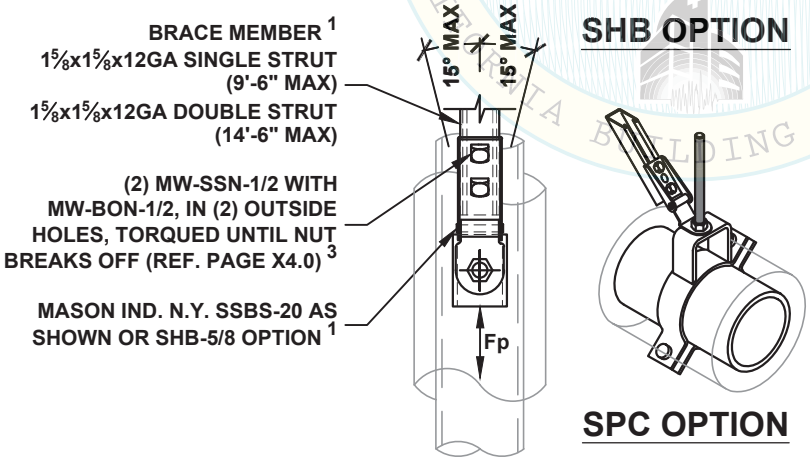

VIEW A-A

SPC OPTION

NOTES:

1. REF. SECTION A10 OR A20 FOR GENERAL NOTES.
2. PROVIDE ROD STIFFENING ONLY WHERE SEISMIC BRACKETS ARE ATTACHED TO THE ROD AND ROD LENGTH (L) EXCEEDS 31". REF. APPROPRIATE M10 PAGES FOR DETAIL.
3. WHEN THE BRACE IS INSTALLED INSIDE OF THE BRACE BRACKET, ONLY THE CENTER MOUNTING HOLE IS REQUIRED TO BE FASTENED, REF X2.3 FOR CONNECTION DETAILS.
4. FOR PIPE/CONDUIT SIZES UP TO 5"Ø MAX, USE RESPECTIVE MW-SPC SIZE (REF. X8.3-X8.3.1) OR USE MW-WPL-63 (REF. X8.4).
5. REF. PAGE A19.0 OR A28.0 FOR PIPE/CONDUIT CLAMP OPTION.

OSHPD REVIEWED FOR CODE COMPLIANCE CALIFORNIA BUILDING CODE 2013
OPM-0043-13
BY: Jeffrey Y. Kikumoto
DATE: 06/23/2016

MASON WEST, INC.
1601 E. Miraloma Ave. Placentia, CA 92870
TEL (714) 630 - 0701, www.masonwest.com

Jiefu "Jeff" Zhang, SE
California SE No. S5270

PAGE
C1.32

HANGER ROD DIAMETER = 5/8"	PIPING/CONDUIT LONGITUDINAL SEISMIC SOLID BRACING SYSTEM 5"Ø PIPE/CONDUIT MAX	KIT OPTIONS SH5L

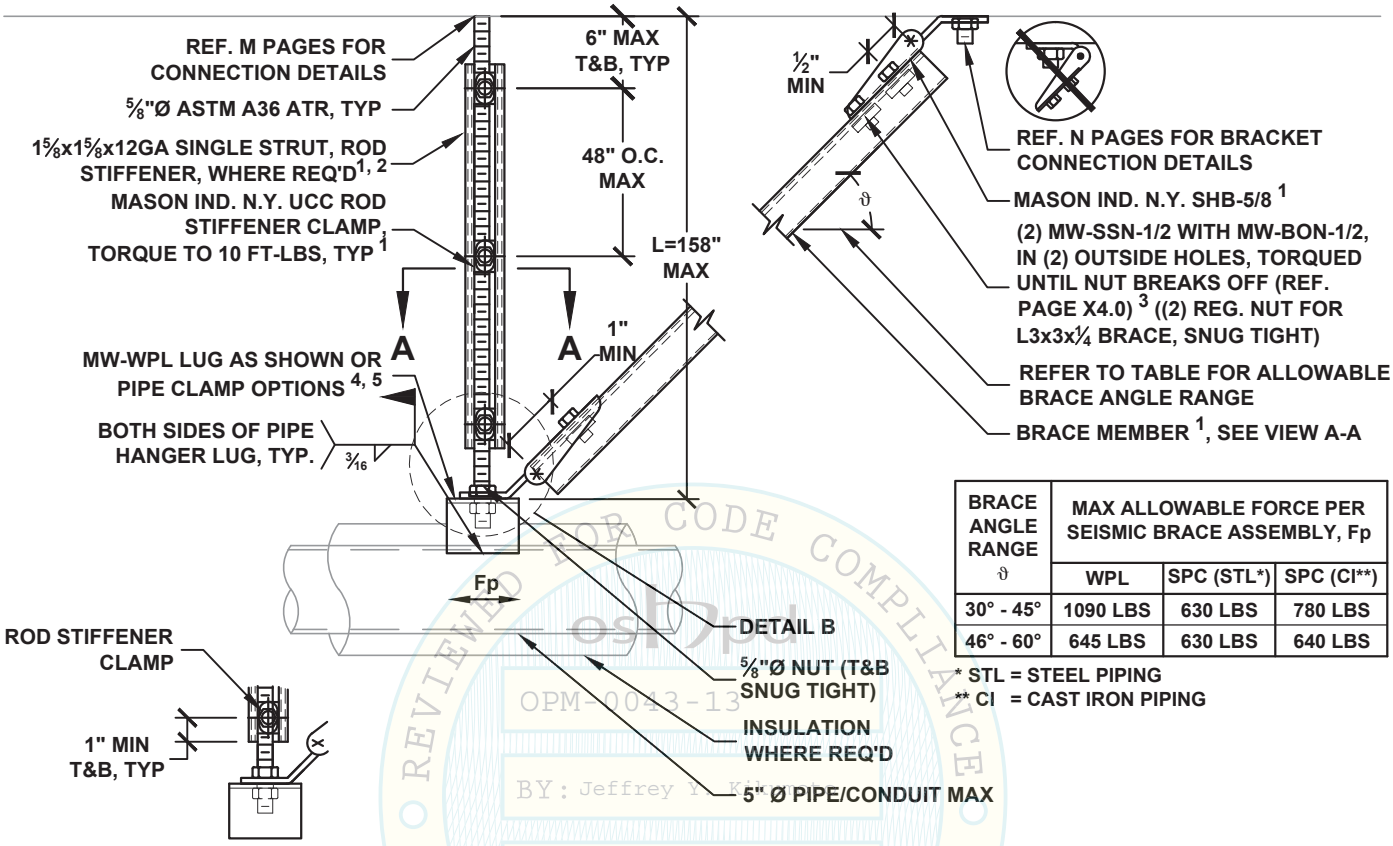

BRACE ANGLE RANGE ϑ	MAX ALLOWABLE FORCE PER SEISMIC BRACE ASSEMBLY, Fp		
	WPL	SPC (STL*)	SPC (CI**)
30° - 45°	1090 LBS	630 LBS	780 LBS
46° - 60°	645 LBS	630 LBS	640 LBS

* STL = STEEL PIPING
** CI = CAST IRON PIPING

DETAIL B

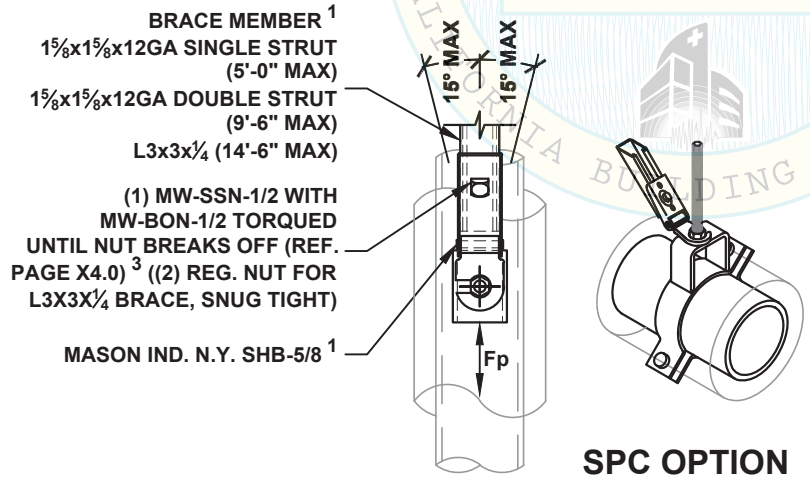

VIEW A-A

SPC OPTION

NOTES:

1. REF. SECTION A10 OR A20 FOR GENERAL NOTES.
2. PROVIDE ROD STIFFENING ONLY WHERE SEISMIC BRACKETS ARE ATTACHED TO THE ROD AND ROD LENGTH (L) EXCEEDS 31". REF. APPROPRIATE M10 PAGES FOR DETAIL.
3. WHEN THE BRACE IS INSTALLED INSIDE OF THE BRACE BRACKET, ONLY THE CENTER MOUNTING HOLE IS REQUIRED TO BE FASTENED, REF X2.3 FOR CONNECTION DETAILS.
4. FOR PIPE/CONDUIT SIZES UP TO 5"Ø MAX, USE RESPECTIVE MW-SPC SIZE (REF. X8.3-X8.3.1) OR USE MW-WPL-63 (REF. X8.4).
5. REF. PAGE A19.0 OR A28.0 FOR PIPE/CONDUIT CLAMP OPTION.

OSHPD REVIEWED FOR CODE COMPLIANCE CALIFORNIA BUILDING CODE 2013
OPM-0043-13
BY: Jeffrey Y. Kikumoto
DATE: 06/23/2016

MASON WEST, INC.
1601 E. Miraloma Ave. Placentia, CA 92870
TEL (714) 630 - 0701, www.masonwest.com

Jiefu "Jeff" Zhang, SE
California SE No. S5270

PAGE
C1.33

HANGER ROD DIAMETER = 5/8"

PIPING/CONDUIT ALL-DIRECTIONAL SEISMIC SOLID BRACING SYSTEM 5"Ø PIPE/CONDUIT MAX

KIT OPTIONS
S20A
S2012A
SH512A
SH520A

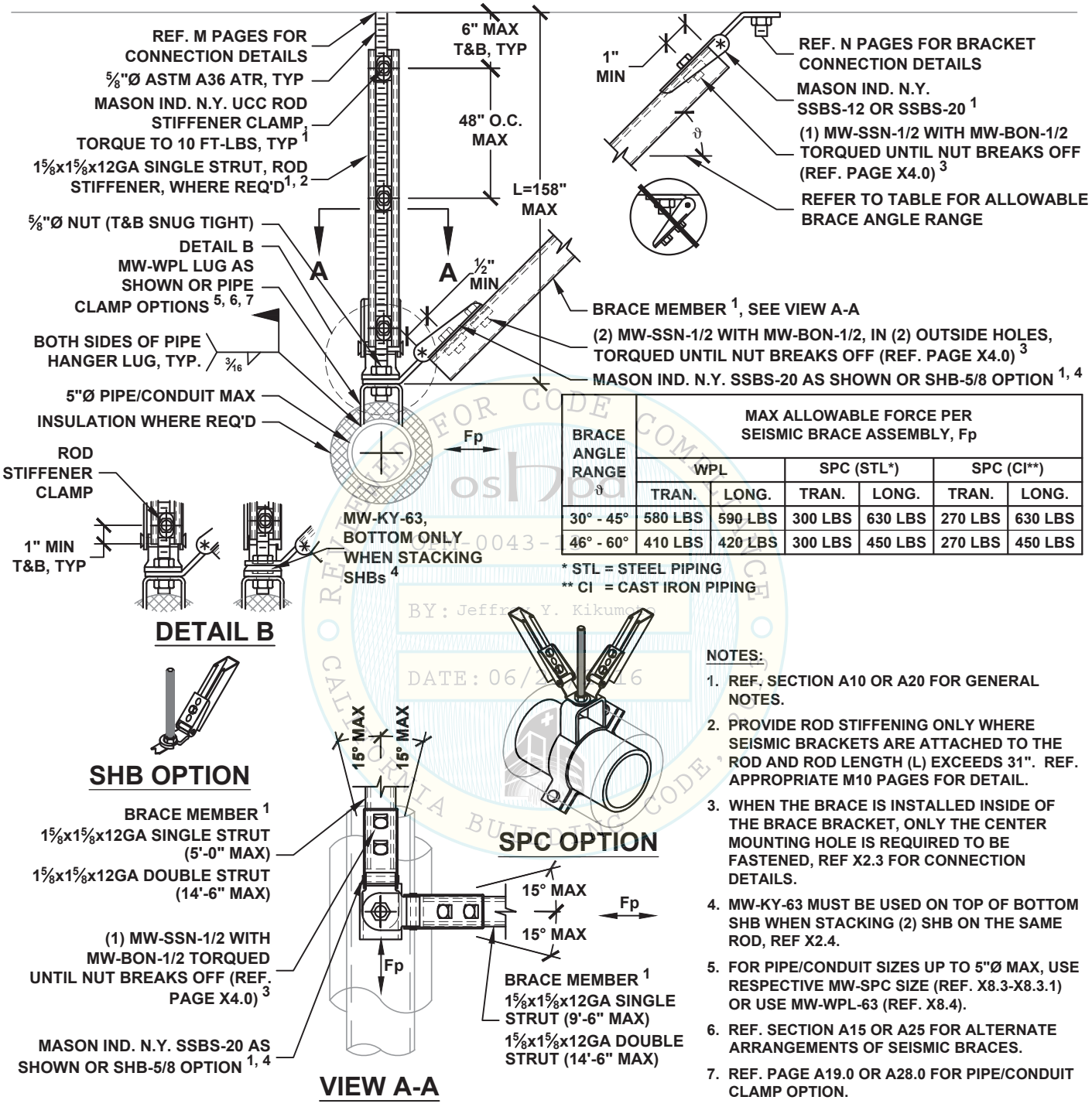

BRACE ANGLE RANGE ϑ	MAX ALLOWABLE FORCE PER SEISMIC BRACE ASSEMBLY, Fp					
	WPL		SPC (STL*)		SPC (CI**)	
	TRAN.	LONG.	TRAN.	LONG.	TRAN.	LONG.
30° - 45°	580 LBS	590 LBS	300 LBS	630 LBS	270 LBS	630 LBS
46° - 60°	410 LBS	420 LBS	300 LBS	450 LBS	270 LBS	450 LBS

* STL = STEEL PIPING
** CI = CAST IRON PIPING

NOTES:

1. REF. SECTION A10 OR A20 FOR GENERAL NOTES.
2. PROVIDE ROD STIFFENING ONLY WHERE SEISMIC BRACKETS ARE ATTACHED TO THE ROD AND ROD LENGTH (L) EXCEEDS 31". REF. APPROPRIATE M10 PAGES FOR DETAIL.
3. WHEN THE BRACE IS INSTALLED INSIDE OF THE BRACE BRACKET, ONLY THE CENTER MOUNTING HOLE IS REQUIRED TO BE FASTENED, REF X2.3 FOR CONNECTION DETAILS.
4. MW-KY-63 MUST BE USED ON TOP OF BOTTOM SHB WHEN STACKING (2) SHB ON THE SAME ROD, REF X2.4.
5. FOR PIPE/CONDUIT SIZES UP TO 5"Ø MAX, USE RESPECTIVE MW-SPC SIZE (REF. X8.3-X8.3.1) OR USE MW-WPL-63 (REF. X8.4).
6. REF. SECTION A15 OR A25 FOR ALTERNATE ARRANGEMENTS OF SEISMIC BRACES.
7. REF. PAGE A19.0 OR A28.0 FOR PIPE/CONDUIT CLAMP OPTION.

OSHPD REVIEWED FOR CODE COMPLIANCE CALIFORNIA BUILDING CODE OPM-0043-13 BY: Jeffrey Y. Kikumoto DATE: 06/23/2016

MASON WEST, INC.
1601 E. Miraloma Ave. Placentia, CA 92870
TEL (714) 630 - 0701, www.masonwest.com

Jiefu "Jeff" Zhang, SE
California SE No. S5270

PAGE
C1.34

HANGER ROD DIAMETER = 5/8"	PIPING/CONDUIT ALL-DIRECTIONAL SEISMIC SOLID BRACING SYSTEM 5"Ø PIPE/CONDUIT MAX	KIT OPTIONS SH5A

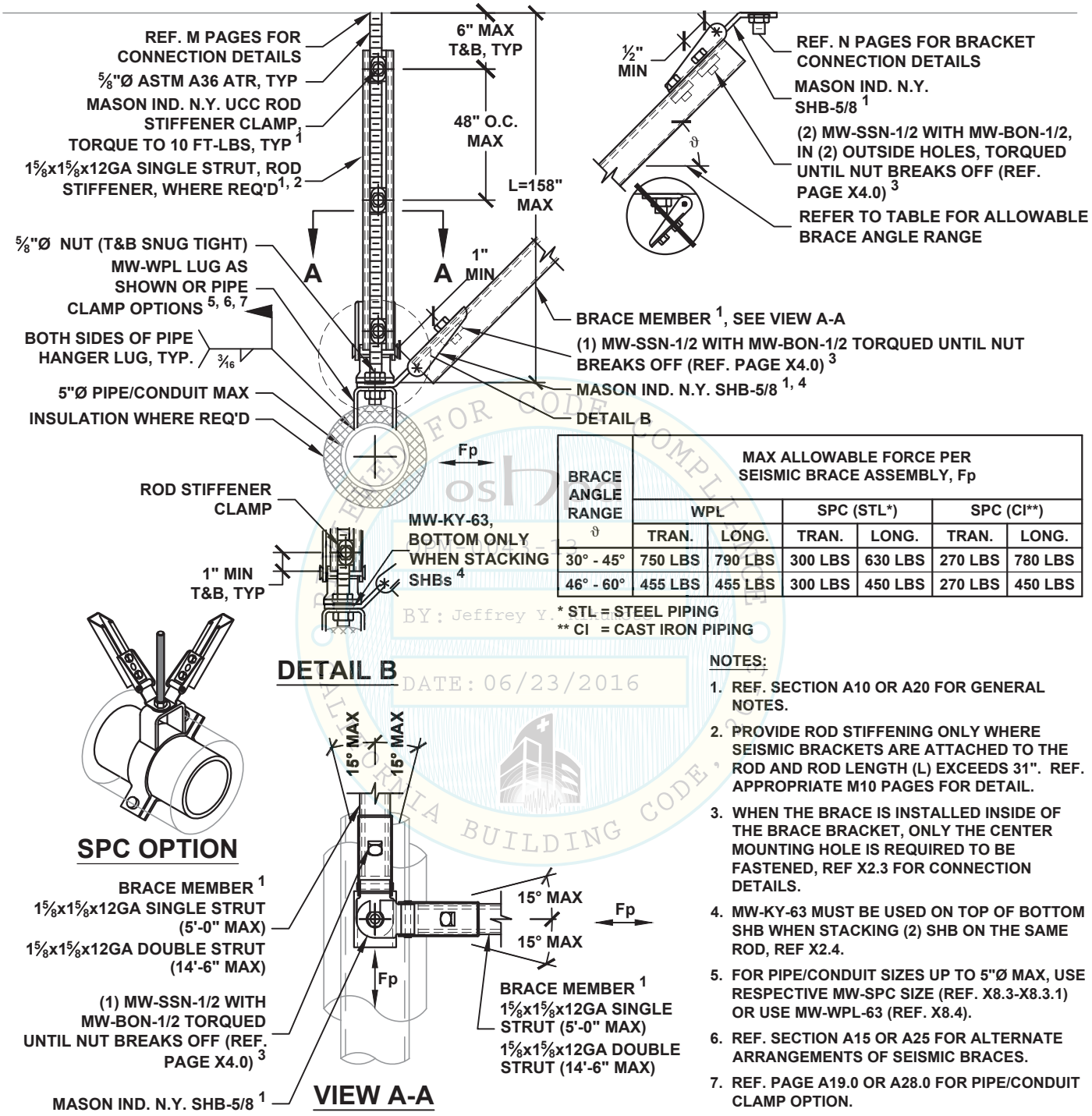

BRACE ANGLE RANGE ϑ	MAX ALLOWABLE FORCE PER SEISMIC BRACE ASSEMBLY, Fp					
	WPL		SPC (STL*)		SPC (CI**)	
	TRAN.	LONG.	TRAN.	LONG.	TRAN.	LONG.
30° - 45°	750 LBS	790 LBS	300 LBS	630 LBS	270 LBS	780 LBS
46° - 60°	455 LBS	455 LBS	300 LBS	450 LBS	270 LBS	450 LBS

* STL = STEEL PIPING
** CI = CAST IRON PIPING

NOTES:

1. REF. SECTION A10 OR A20 FOR GENERAL NOTES.
2. PROVIDE ROD STIFFENING ONLY WHERE SEISMIC BRACKETS ARE ATTACHED TO THE ROD AND ROD LENGTH (L) EXCEEDS 31". REF. APPROPRIATE M10 PAGES FOR DETAIL.
3. WHEN THE BRACE IS INSTALLED INSIDE OF THE BRACE BRACKET, ONLY THE CENTER MOUNTING HOLE IS REQUIRED TO BE FASTENED, REF X2.3 FOR CONNECTION DETAILS.
4. MW-KY-63 MUST BE USED ON TOP OF BOTTOM SHB WHEN STACKING (2) SHB ON THE SAME ROD, REF X2.4.
5. FOR PIPE/CONDUIT SIZES UP TO 5"Ø MAX, USE RESPECTIVE MW-SPC SIZE (REF. X8.3-X8.3.1) OR USE MW-WPL-63 (REF. X8.4).
6. REF. SECTION A15 OR A25 FOR ALTERNATE ARRANGEMENTS OF SEISMIC BRACES.
7. REF. PAGE A19.0 OR A28.0 FOR PIPE/CONDUIT CLAMP OPTION.

OSHPD ACCEPTED FOR CODE COMPLIANCE
OPM-0043-13
BY: Jeffrey Y. Kikumoto
DATE: 06/23/2016
CALIFORNIA BUILDING CODE, 2013

MASON WEST, INC.
1601 E. Miraloma Ave. Placentia, CA 92870
TEL (714) 630 - 0701, www.masonwest.com

Jiefu "Jeff" Zhang, SE
California SE No. S5270

PAGE
C1.35

HANGER ROD DIAMETER = ¾"

PIPING TRANSVERSE SEISMIC SOLID BRACING SYSTEM 12"Ø PIPE MAX

KIT OPTIONS
S20T
S2012T
SH612T
SH620T

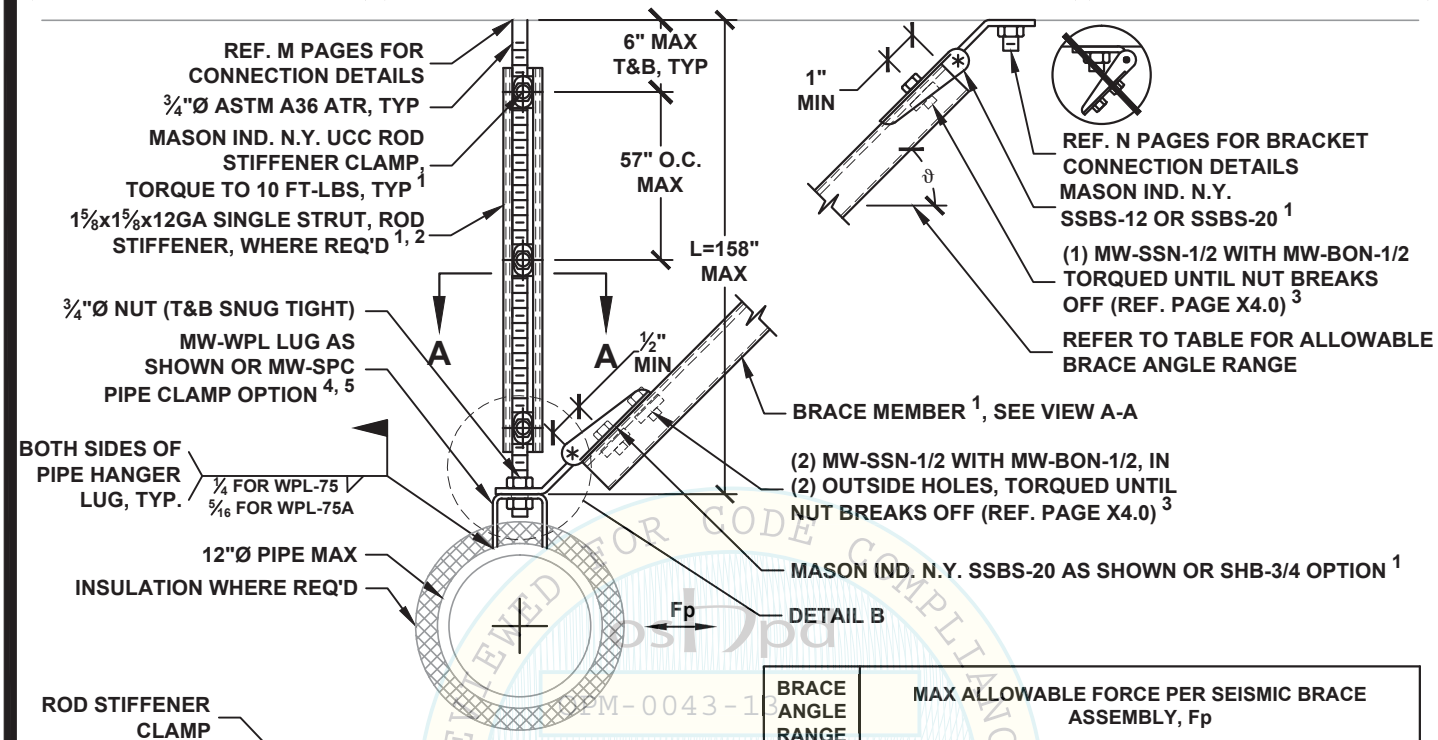

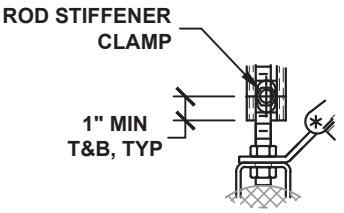

BRACE ANGLE RANGE ϑ	MAX ALLOWABLE FORCE PER SEISMIC BRACE ASSEMBLY, Fp				
	WPL	8"Ø PIPE MAX		12"Ø PIPE MAX	
		SPC (STL*)	SPC (CI**)	SPC (STL*)	SPC (CI**)
30° - 45°	630 LBS	580 LBS	630 LBS	250 LBS	370 LBS
46° - 60°	570 LBS	570 LBS	570 LBS	250 LBS	370 LBS

* STL = STEEL PIPING
** CI = CAST IRON PIPING

DETAIL B

SHB OPTION

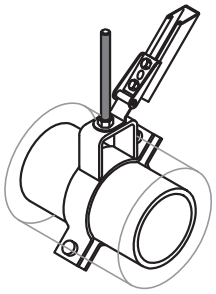

SPC OPTION

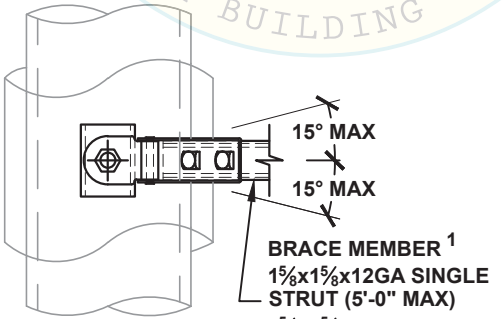

VIEW A-A

NOTES:

1. REF. SECTION A10 FOR GENERAL NOTES.
2. PROVIDE ROD STIFFENING ONLY WHERE SEISMIC BRACKETS ARE ATTACHED TO THE ROD AND ROD LENGTH (L) EXCEEDS 37". REF. APPROPRIATE M10 PAGES FOR DETAIL.
3. WHEN THE BRACE IS INSTALLED INSIDE OF THE BRACE BRACKET, ONLY THE CENTER MOUNTING HOLE IS REQUIRED TO BE FASTENED, REF X2.3 FOR CONNECTION DETAILS.
4. FOR PIPE SIZES UP TO 12"Ø MAX, USE RESPECTIVE MW-SPC SIZE (REF. X8.3-X8.3.1) OR USE MW-WPL-75 OR -75A (REF. X8.4) FOR UP TO 8"Ø OR 12"Ø MAX, RESPECTIVELY.
5. REF. SECTION A15 FOR ALTERNATIVE ARRANGEMENT OF SEISMIC BRACES.

REVIEWED FOR CODE COMPLIANCE
CALIFORNIA BUILDING CODE 2013
OPM-0043-13
Reviewed by: Jeffrey Y. Kikumoto
DATE: 06/23/2016

MASON WEST, INC.
1601 E. Miraloma Ave. Placentia, CA 92870
TEL (714) 630 - 0701, www.masonwest.com

Jiefu "Jeff" Zhang, SE
California SE No. S5270

PAGE
C1.40

HANGER ROD DIAMETER = ¾"

PIPING TRANSVERSE SEISMIC SOLID BRACING SYSTEM 12"Ø PIPE MAX

KIT OPTIONS
SH6T
SH65T

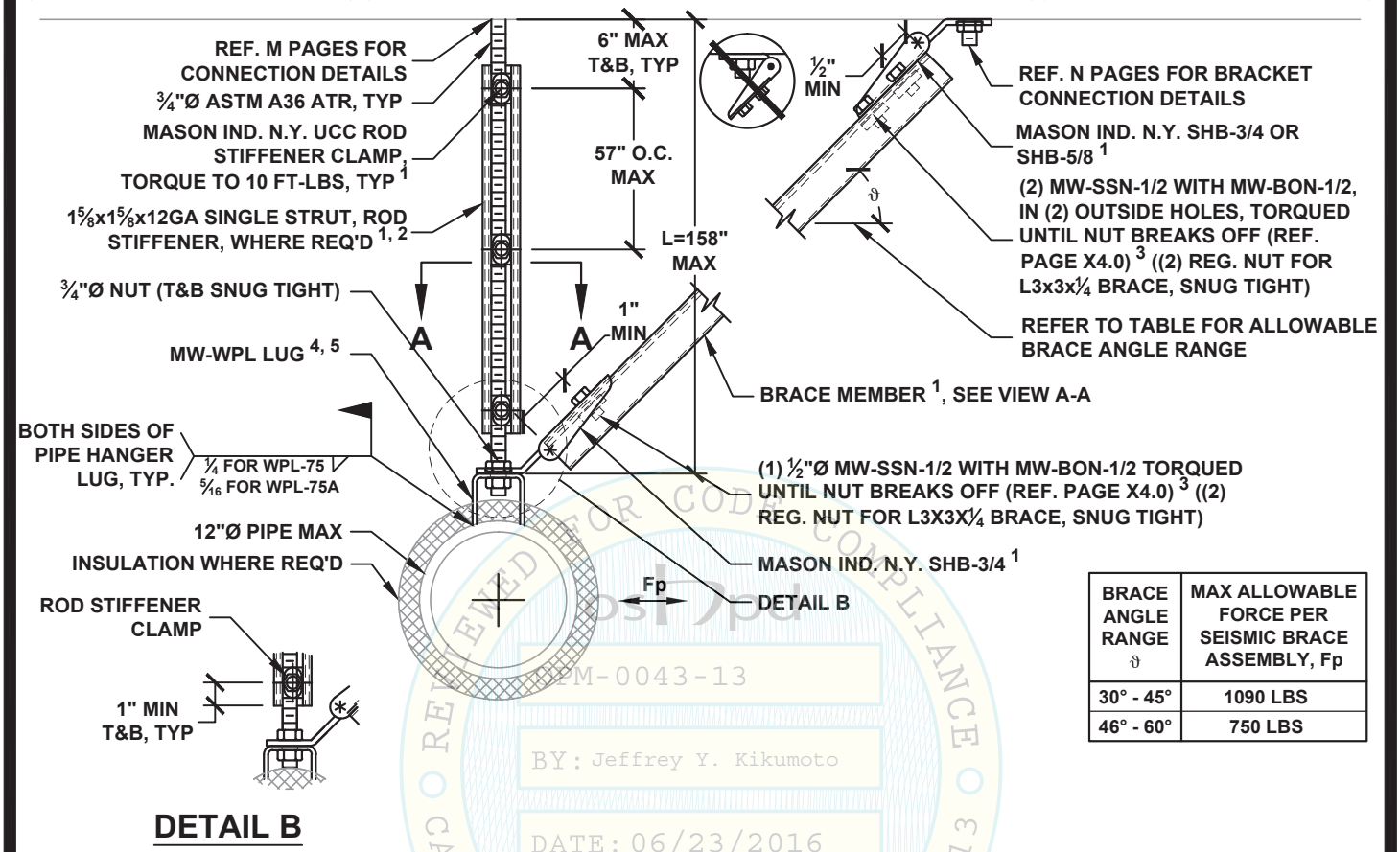

DETAIL B

BRACE ANGLE RANGE ϑ	MAX ALLOWABLE FORCE PER SEISMIC BRACE ASSEMBLY, Fp
30° - 45°	1090 LBS
46° - 60°	750 LBS

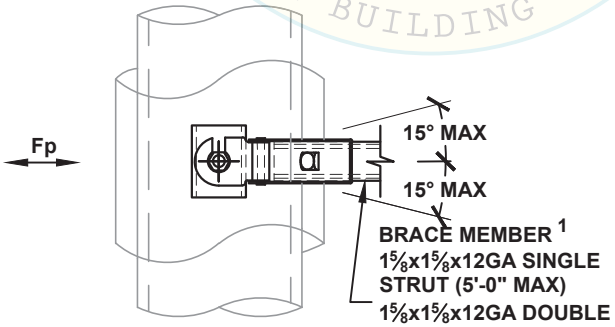

VIEW A-A

NOTES:

1. REF. SECTION A10 FOR GENERAL NOTES.
2. PROVIDE ROD STIFFENING ONLY WHERE SEISMIC BRACKETS ARE ATTACHED TO THE ROD AND ROD LENGTH (L) EXCEEDS 37". REF. APPROPRIATE M10 PAGES FOR DETAIL.
3. WHEN THE BRACE IS INSTALLED INSIDE OF THE BRACE BRACKET, ONLY THE CENTER MOUNTING HOLE IS REQUIRED TO BE FASTENED, REF X2.3 FOR CONNECTION DETAILS.
4. FOR PIPE SIZES UP TO 8"Ø OR 12"Ø MAX, USE MW-WPL-75 OR MW-WPL-75A (REF. X8.4), RESPECTIVELY.
5. REF. SECTION A15 FOR ALTERNATE ARRANGEMENTS OF SEISMIC BRACES.

REVIEWED FOR CODE COMPLIANCE
CALIFORNIA BUILDING CODE, 2013
OPM-0043-13
BY: Jeffrey Y. Kikumoto
DATE: 06/23/2016

MASON WEST, INC.
1601 E. Miraloma Ave. Placentia, CA 92870
TEL (714) 630 - 0701, www.masonwest.com

Jiefu "Jeff" Zhang, SE
California SE No. S5270

PAGE
C1.41

HANGER ROD DIAMETER = ¾"

PIPING LONGITUDINAL SEISMIC SOLID BRACING SYSTEM 12"Ø PIPE MAX

KIT OPTIONS
S20L
S2012L
SH612L
SH620L

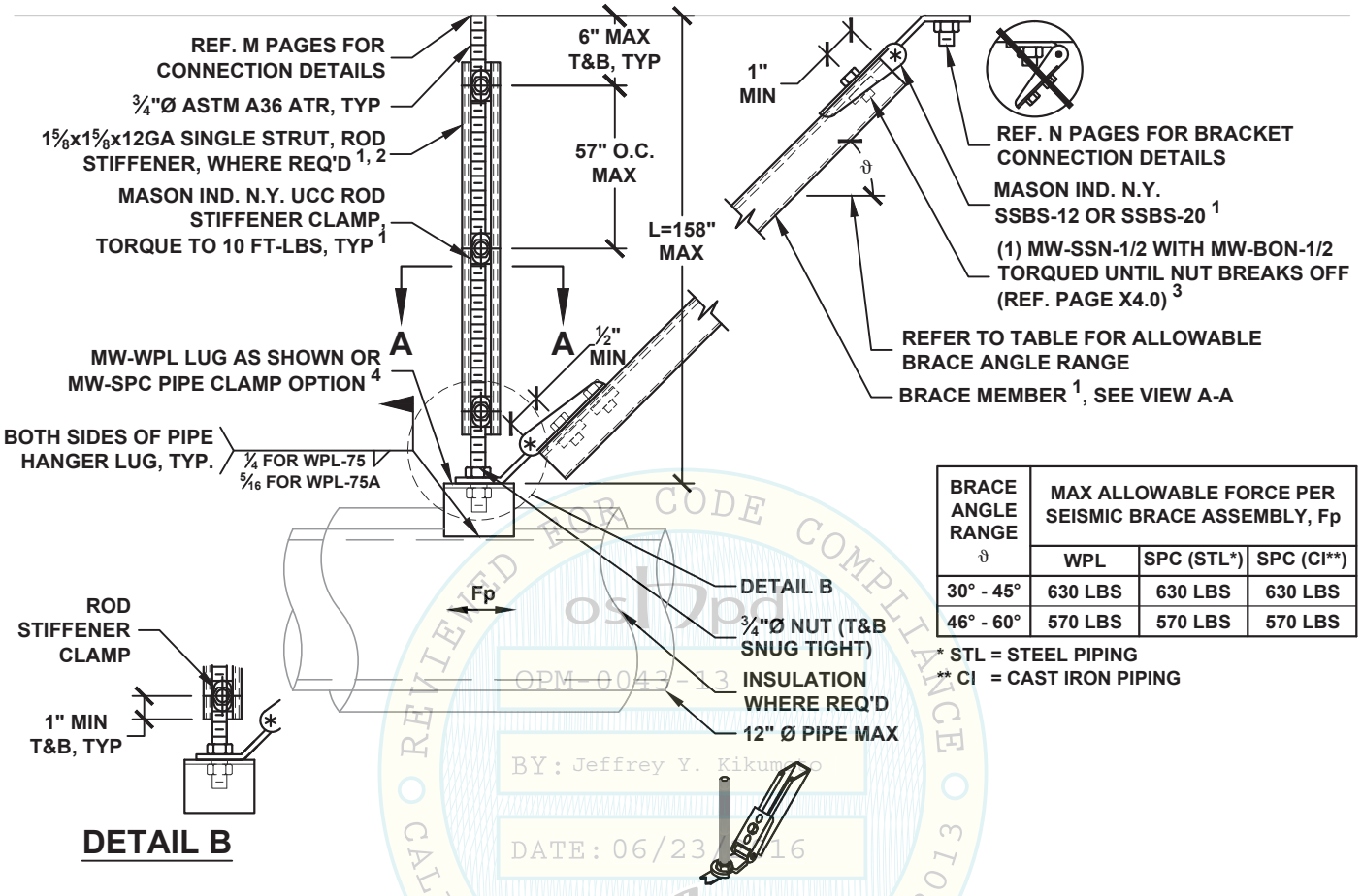

DETAIL B

SHB OPTION

BRACE ANGLE RANGE ϑ	MAX ALLOWABLE FORCE PER SEISMIC BRACE ASSEMBLY, Fp		
	WPL	SPC (STL*)	SPC (CI**)
30° - 45°	630 LBS	630 LBS	630 LBS
46° - 60°	570 LBS	570 LBS	570 LBS

* STL = STEEL PIPING
** CI = CAST IRON PIPING

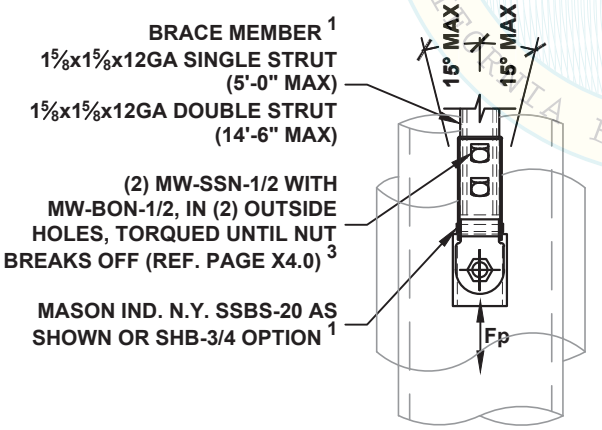

VIEW A-A

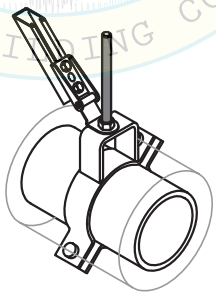

SPC OPTION

NOTES:

1. REF. SECTION A10 FOR GENERAL NOTES.
2. PROVIDE ROD STIFFENING ONLY WHERE SEISMIC BRACKETS ARE ATTACHED TO THE ROD AND ROD LENGTH (L) EXCEEDS 37". REF. APPROPRIATE M10 PAGES FOR DETAIL.
3. WHEN THE BRACE IS INSTALLED INSIDE OF THE BRACE BRACKET, ONLY THE CENTER MOUNTING HOLE IS REQUIRED TO BE FASTENED, REF X2.3 FOR CONNECTION DETAILS.
4. FOR PIPE SIZES UP TO 12"Ø MAX, USE RESPECTIVE MW-SPC SIZE (REF. X8.3-X8.3.1) OR USE MW-WPL-75 OR -75A (REF. X8.4) FOR UP TO 8"Ø OR 12"Ø MAX, RESPECTIVELY.

OSHPD
OPM-0043-13
BY: Jeffrey Y. Kikumoto
DATE: 06/23/2016
REVIEWED FOR CODE COMPLIANCE
CALIFORNIA BUILDING CODE, 2013

MASON WEST, INC.
1601 E. Miraloma Ave. Placentia, CA 92870
TEL (714) 630 - 0701, www.masonwest.com

Jiefu "Jeff" Zhang, SE
California SE No. S5270

PAGE
C1.42

HANGER ROD DIAMETER = ¾"	PIPING LONGITUDINAL SEISMIC SOLID BRACING SYSTEM 12"Ø PIPE MAX	KIT OPTIONS SH6L SH65L

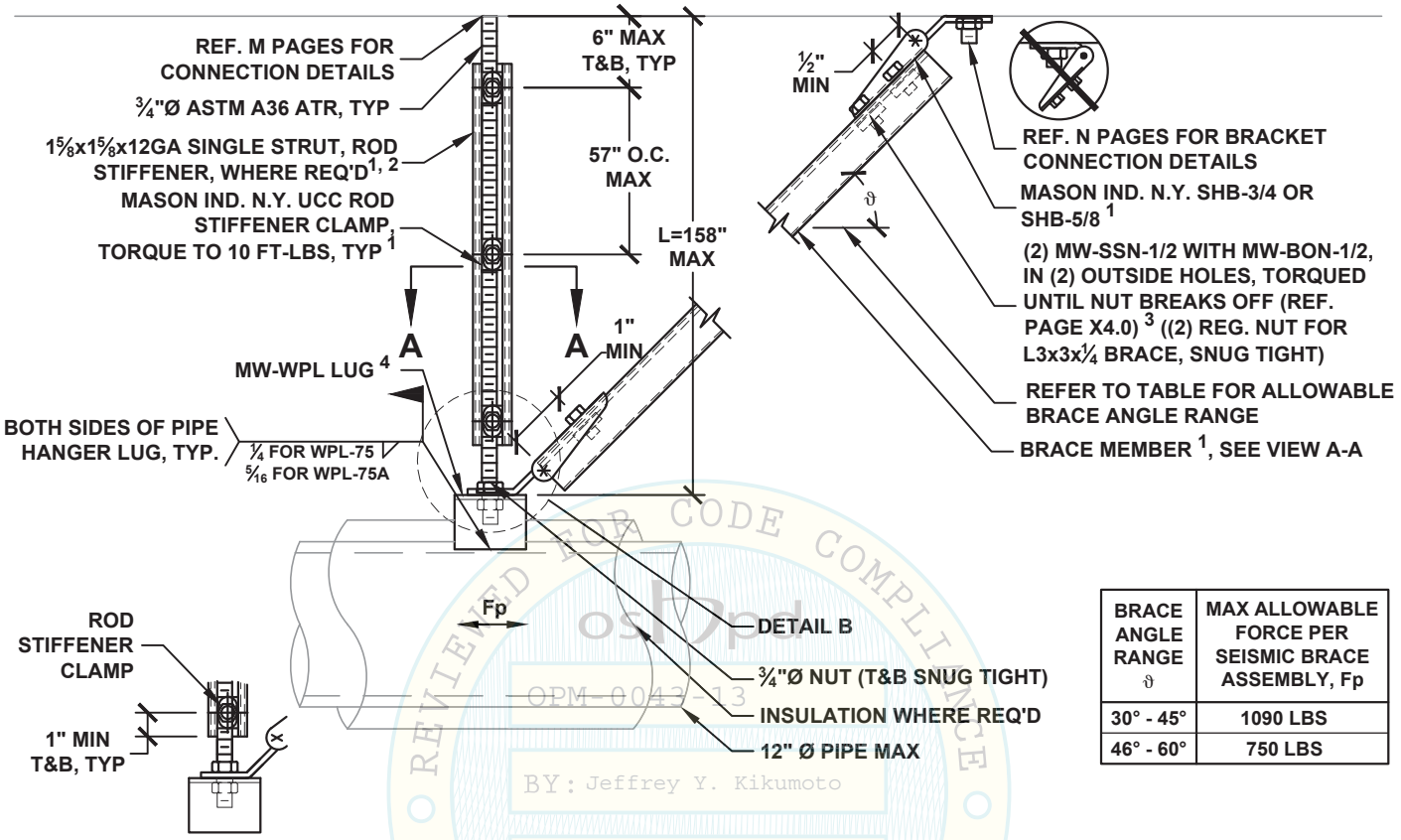

DETAIL B

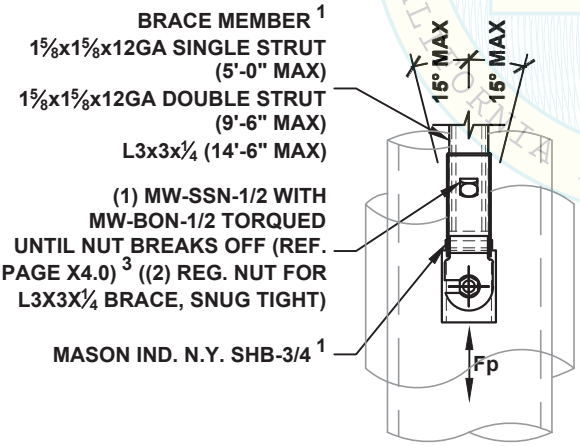

VIEW A-A

BRACE ANGLE RANGE ϑ	MAX ALLOWABLE FORCE PER SEISMIC BRACE ASSEMBLY, Fp
30° - 45°	1090 LBS
46° - 60°	750 LBS

NOTES:

1. REF. SECTION A10 FOR GENERAL NOTES.
2. PROVIDE ROD STIFFENING ONLY WHERE SEISMIC BRACKETS ARE ATTACHED TO THE ROD AND ROD LENGTH (L) EXCEEDS 37". REF. APPROPRIATE M10 PAGES FOR DETAIL.
3. WHEN THE BRACE IS INSTALLED INSIDE OF THE BRACE BRACKET, ONLY THE CENTER MOUNTING HOLE IS REQUIRED TO BE FASTENED, REF X2.3 FOR CONNECTION DETAILS.
4. FOR PIPE SIZES UP TO 8"Ø OR 12"Ø MAX, USE MW-WPL-75 OR MW-WPL-75A (REF. X8.4), RESPECTIVELY.

REVIEWED FOR CODE COMPLIANCE
CALIFORNIA BUILDING CODE, 2013
OPM-0043-13
BY: Jeffrey Y. Kikumoto
DATE: 06/23/2016

MASON WEST, INC.
1601 E. Miraloma Ave. Placentia, CA 92870
TEL (714) 630 - 0701, www.masonwest.com

Jiefu "Jeff" Zhang, SE
California SE No. S5270

PAGE
C1.43

HANGER ROD DIAMETER = ¾"

PIPING ALL-DIRECTIONAL SEISMIC SOLID BRACING SYSTEM 12"Ø PIPE MAX

KIT OPTIONS
S20A
S2012A
SH612A
SH620A

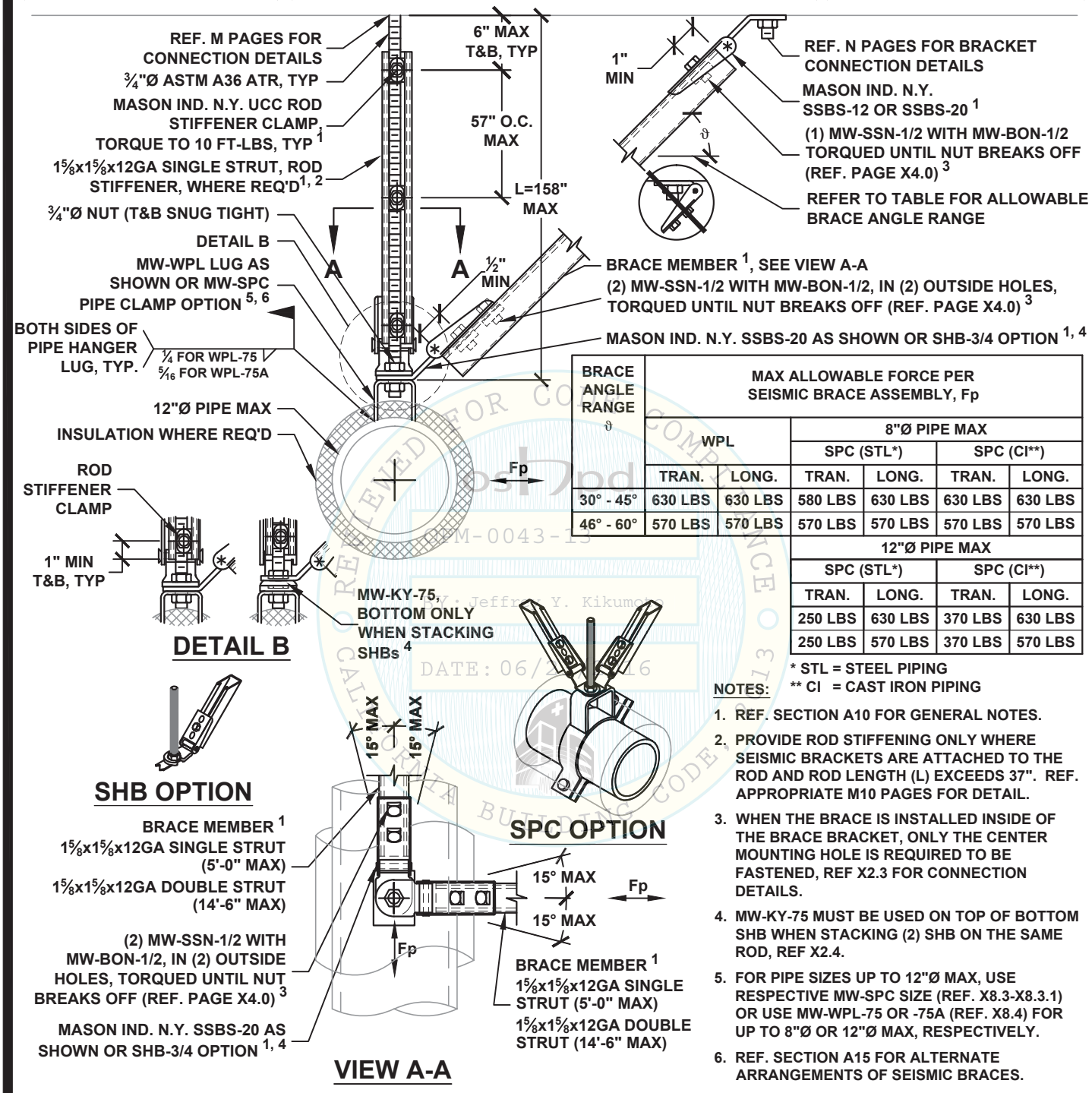

BRACE ANGLE RANGE ϑ	MAX ALLOWABLE FORCE PER SEISMIC BRACE ASSEMBLY, Fp					
	WPL		8"Ø PIPE MAX			
			SPC (STL*)		SPC (CI**)	
	TRAN.	LONG.	TRAN.	LONG.	TRAN.	LONG.
30° - 45°	630 LBS	630 LBS	580 LBS	630 LBS	630 LBS	630 LBS
46° - 60°	570 LBS	570 LBS	570 LBS	570 LBS	570 LBS	570 LBS

12"Ø PIPE MAX			
SPC (STL*)		SPC (CI**)	
TRAN.	LONG.	TRAN.	LONG.
250 LBS	630 LBS	370 LBS	630 LBS
250 LBS	570 LBS	370 LBS	570 LBS

* STL = STEEL PIPING
** CI = CAST IRON PIPING

NOTES:

1. REF. SECTION A10 FOR GENERAL NOTES.
2. PROVIDE ROD STIFFENING ONLY WHERE SEISMIC BRACKETS ARE ATTACHED TO THE ROD AND ROD LENGTH (L) EXCEEDS 37". REF. APPROPRIATE M10 PAGES FOR DETAIL.
3. WHEN THE BRACE IS INSTALLED INSIDE OF THE BRACE BRACKET, ONLY THE CENTER MOUNTING HOLE IS REQUIRED TO BE FASTENED, REF X2.3 FOR CONNECTION DETAILS.
4. MW-KY-75 MUST BE USED ON TOP OF BOTTOM SHB WHEN STACKING (2) SHB ON THE SAME ROD, REF X2.4.
5. FOR PIPE SIZES UP TO 12"Ø MAX, USE RESPECTIVE MW-SPC SIZE (REF. X8.3-X8.3.1) OR USE MW-WPL-75 OR -75A (REF. X8.4) FOR UP TO 8"Ø OR 12"Ø MAX, RESPECTIVELY.
6. REF. SECTION A15 FOR ALTERNATE ARRANGEMENTS OF SEISMIC BRACES.

CERTIFIED FOR CODE COMPLIANCE
OPM-0043-13
Reviewed By: Jeffrey Y. Kikumoto
DATE: 06/23/2016
CALIFORNIA BUILDING CODE 2013

MASON WEST, INC.
1601 E. Miraloma Ave. Placentia, CA 92870
TEL (714) 630 - 0701, www.masonwest.com

Jiefu "Jeff" Zhang, SE
California SE No. S5270

PAGE
C1.44

HANGER ROD DIAMETER = ¾"

PIPING ALL-DIRECTIONAL SEISMIC SOLID BRACING SYSTEM 12"Ø PIPE MAX

KIT OPTIONS
SH6A
SH65A

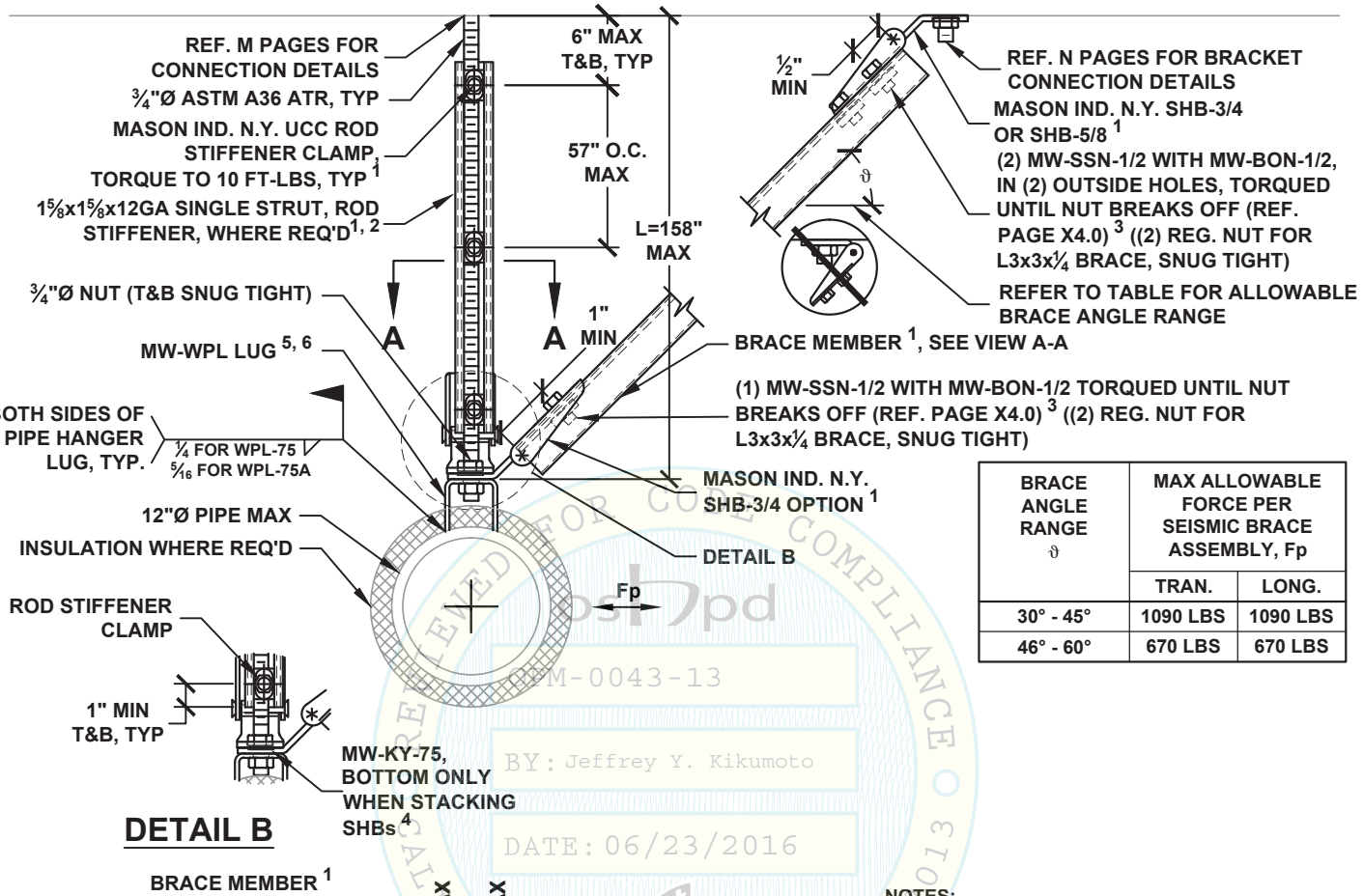

BRACE ANGLE RANGE ϑ	MAX ALLOWABLE FORCE PER SEISMIC BRACE ASSEMBLY, Fp	
	TRAN.	LONG.
30° - 45°	1090 LBS	1090 LBS
46° - 60°	670 LBS	670 LBS

DETAIL B

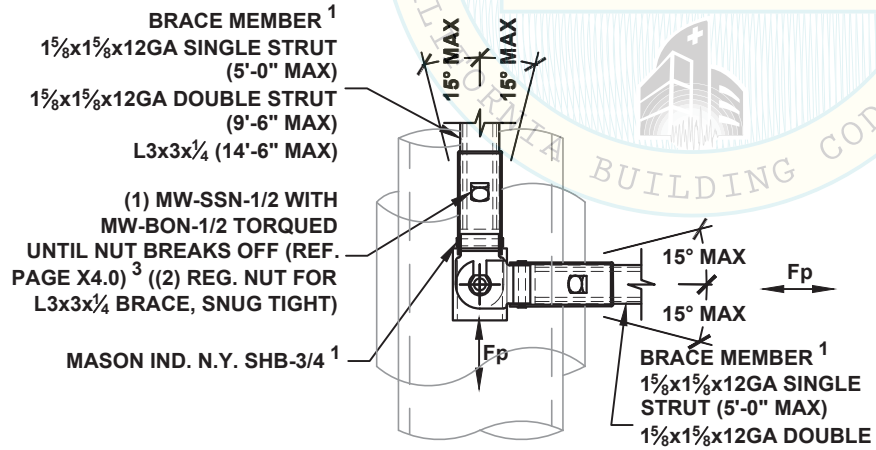

VIEW A-A

NOTES:

1. REF. SECTION A10 FOR GENERAL NOTES.
2. PROVIDE ROD STIFFENING ONLY WHERE SEISMIC BRACKETS ARE ATTACHED TO THE ROD AND ROD LENGTH (L) EXCEEDS 37". REF. APPROPRIATE M10 PAGES FOR DETAIL.
3. WHEN THE BRACE IS INSTALLED INSIDE OF THE BRACE BRACKET, ONLY THE CENTER MOUNTING HOLE IS REQUIRED TO BE FASTENED, REF X2.3 FOR CONNECTION DETAILS.
4. MW-KY-75 MUST BE USED ON TOP OF BOTTOM SHB WHEN STACKING (2) SHB ON THE SAME ROD, REF X2.4.
5. FOR PIPE SIZES UP TO 8"Ø OR 12"Ø MAX, USE MW-WPL-75 OR MW-WPL-75A (REF. X8.4), RESPECTIVELY.
6. REF. SECTION A15 FOR ALTERNATE ARRANGEMENTS OF SEISMIC BRACES.

RECEIVED FOR CODE COMPLIANCE
CALIFORNIA BUILDING CODE, 2013
OPM-0043-13
BY: Jeffrey Y. Kikumoto
DATE: 06/23/2016

MASON WEST, INC.
1601 E. Miraloma Ave. Placentia, CA 92870
TEL (714) 630 - 0701, www.masonwest.com

Jiefu "Jeff" Zhang, SE
California SE No. S5270

PAGE
C1.45

HANGER ROD DIAMETER = ¾"

PIPING TRANSVERSE SEISMIC SOLID BRACING SYSTEM 18"Ø PIPE MAX

KIT OPTIONS
S3T

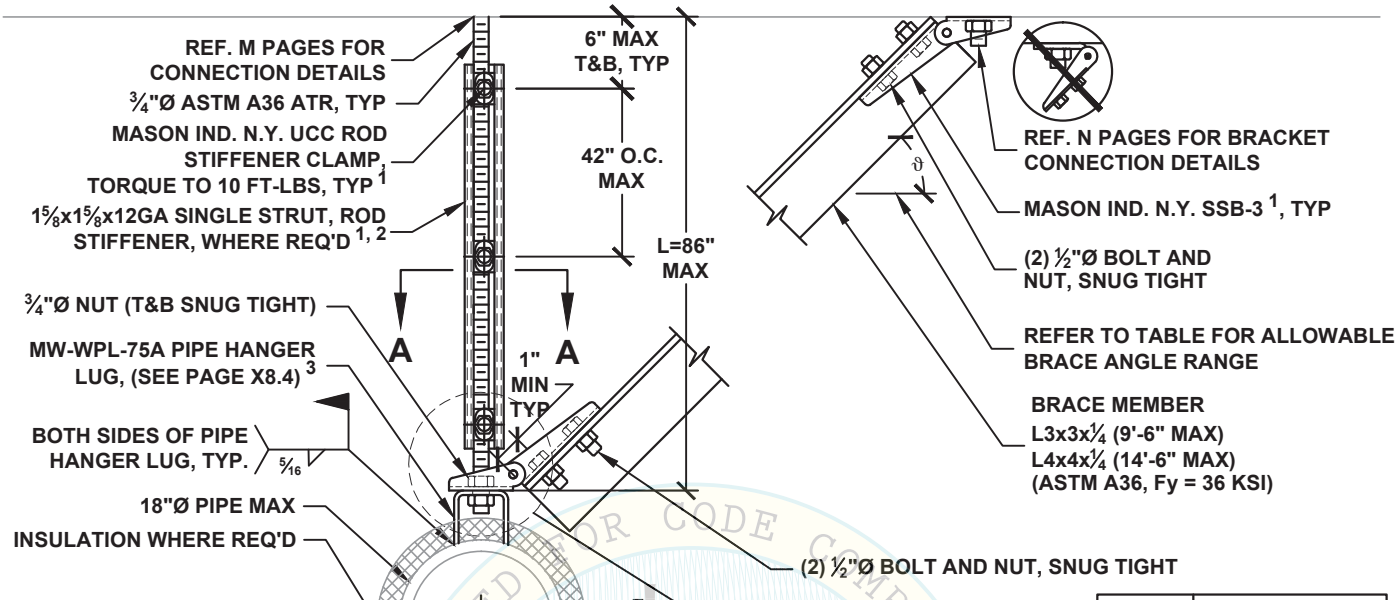

BRACE ANGLE RANGE ϑ	MAX ALLOWABLE FORCE PER SEISMIC BRACE ASSEMBLY, Fp
30° - 45°	2750 LBS
46° - 60°	1740 LBS

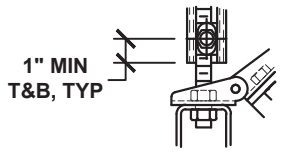

DETAIL B

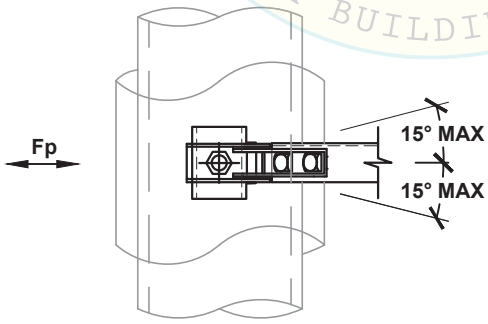

VIEW A-A

NOTES:

1. REF. SECTION A10 FOR GENERAL NOTES.
2. PROVIDE ROD STIFFENING ONLY WHERE SEISMIC BRACKETS ARE ATTACHED TO THE ROD AND ROD LENGTH (L) EXCEEDS 27". REF. APPROPRIATE M10 PAGES FOR DETAIL.
3. REF. SECTION A15 FOR ALTERNATE ARRANGEMENTS OF SEISMIC BRACES.

REVIEWED FOR CODE COMPLIANCE
CALIFORNIA BUILDING CODE, 2013
OPM-0043-13
BY: Jeffrey Y. Kikumoto
DATE: 06/23/2016

MASON WEST, INC.
1601 E. Miraloma Ave. Placentia, CA 92870
TEL (714) 630 - 0701, www.masonwest.com

Jiefu "Jeff" Zhang, SE
California SE No. S5270

PAGE
C1.46

HANGER ROD DIAMETER = ¾"	PIPING TRANSVERSE SEISMIC SOLID BRACING SYSTEM 18"Ø PIPE MAX	KIT OPTIONS S3T

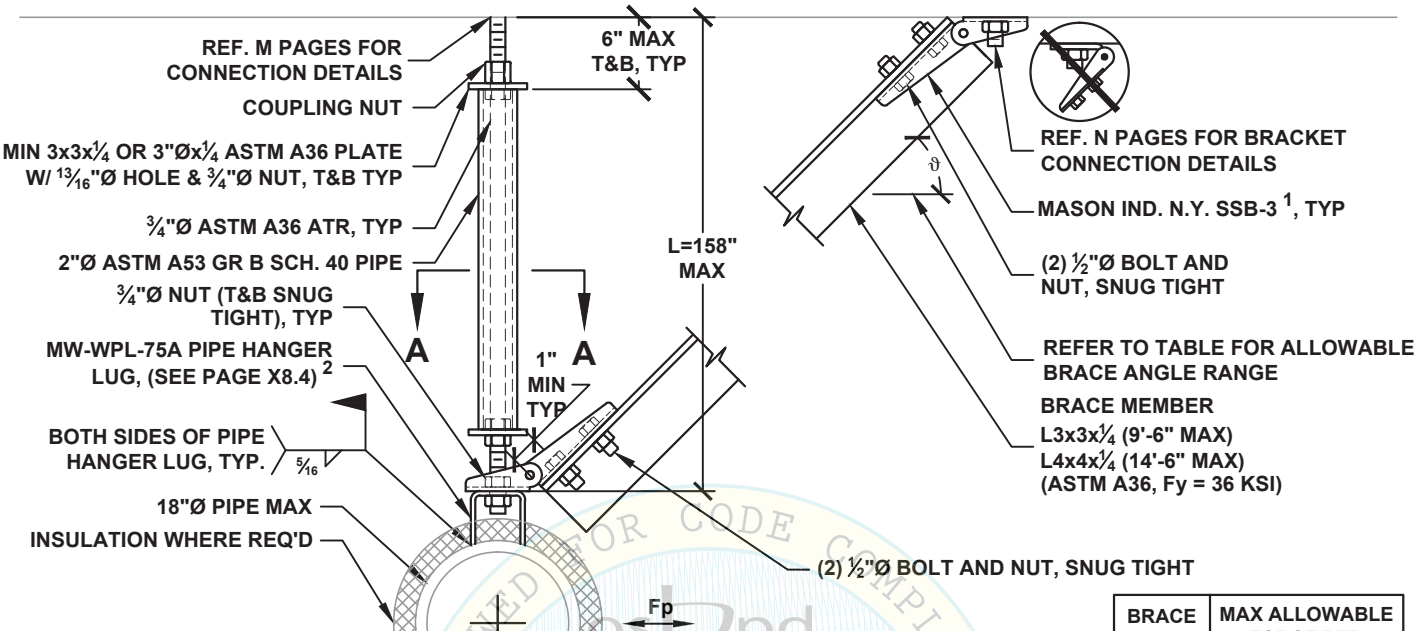

BRACE ANGLE RANGE ϑ	MAX ALLOWABLE FORCE PER SEISMIC BRACE ASSEMBLY, Fp
30° - 45°	2750 LBS
46° - 60°	1740 LBS

REVIEWED FOR CODE COMPLIANCE
CALIFORNIA BUILDING CODE, 2013
OPM-0043-13
BY: Jeffrey Y. Kikumoto
DATE: 06/23/2016

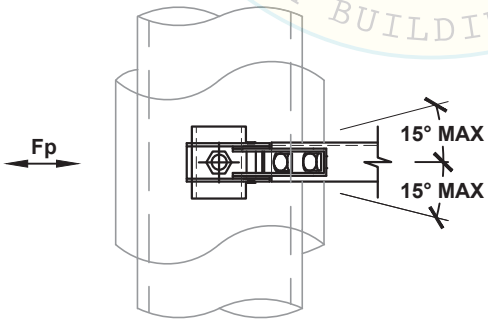

VIEW A-A

NOTES:

1. REF. SECTION A10 FOR GENERAL NOTES.
2. REF. SECTION A15 FOR ALTERNATE ARRANGEMENTS OF SEISMIC BRACES.

MASON WEST, INC.
1601 E. Miraloma Ave. Placentia, CA 92870
TEL (714) 630 - 0701, www.masonwest.com

Jiefu "Jeff" Zhang, SE
California SE No. S5270

PAGE
C1.46.1

HANGER ROD DIAMETER = ¾"	PIPING LONGITUDINAL SEISMIC SOLID BRACING SYSTEM 18"Ø PIPE MAX	KIT OPTIONS S3L

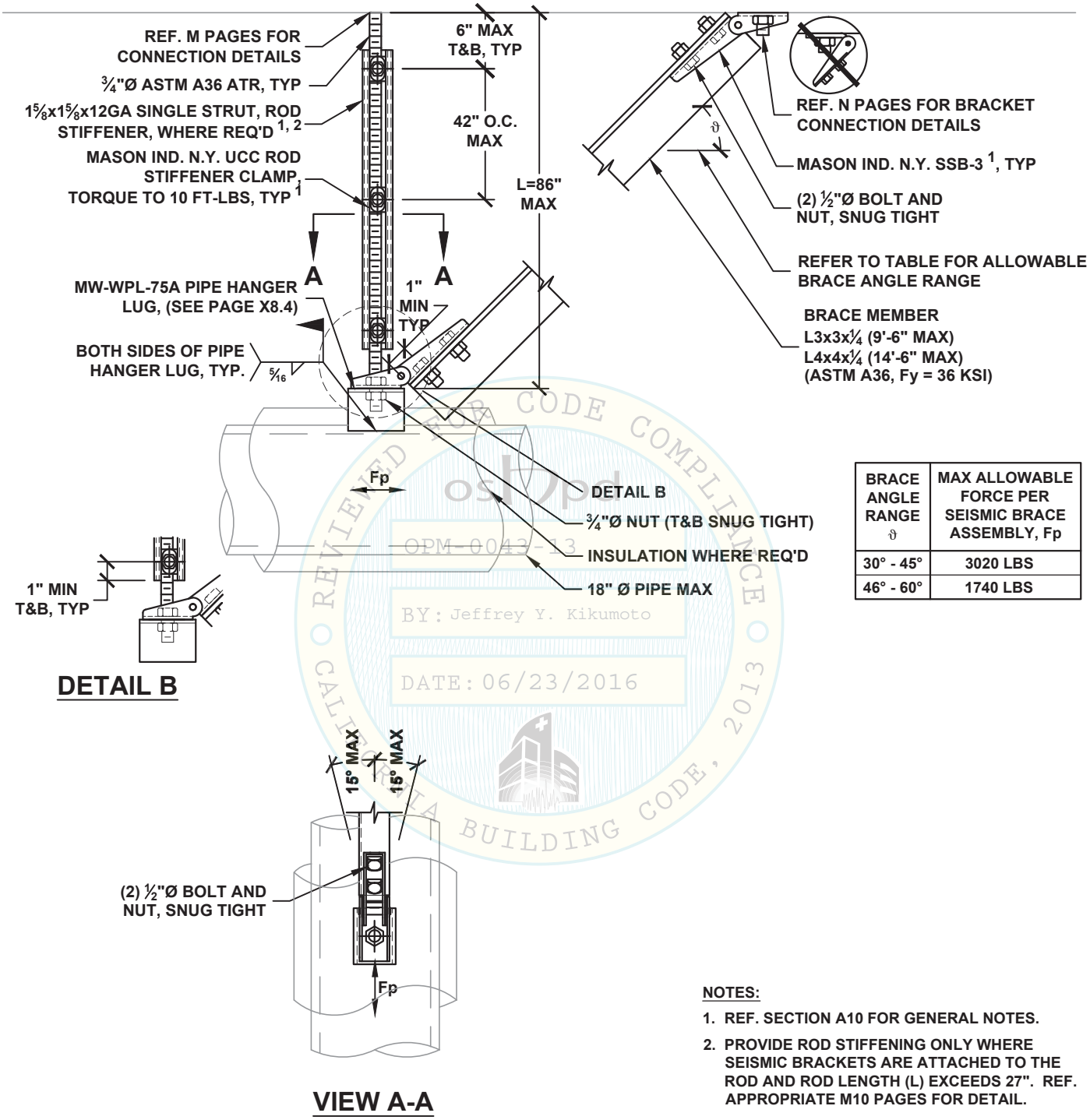

BRACE ANGLE RANGE ϑ	MAX ALLOWABLE FORCE PER SEISMIC BRACE ASSEMBLY, Fp
30° - 45°	3020 LBS
46° - 60°	1740 LBS

NOTES:

1. REF. SECTION A10 FOR GENERAL NOTES.
2. PROVIDE ROD STIFFENING ONLY WHERE SEISMIC BRACKETS ARE ATTACHED TO THE ROD AND ROD LENGTH (L) EXCEEDS 27". REF. APPROPRIATE M10 PAGES FOR DETAIL.

OSHPD
OPM-0043-13
BY: Jeffrey Y. Kikumoto
DATE: 06/23/2016
REVIEWED FOR CODE COMPLIANCE
CALIFORNIA BUILDING CODE, 2013

MASON WEST, INC.
1601 E. Miraloma Ave. Placentia, CA 92870
TEL (714) 630 - 0701, www.masonwest.com

Jiefu "Jeff" Zhang, SE
California SE No. S5270

PAGE
C1.47

HANGER ROD DIAMETER = ¾"	PIPING LONGITUDINAL SEISMIC SOLID BRACING SYSTEM 18"Ø PIPE MAX	KIT OPTIONS S3L

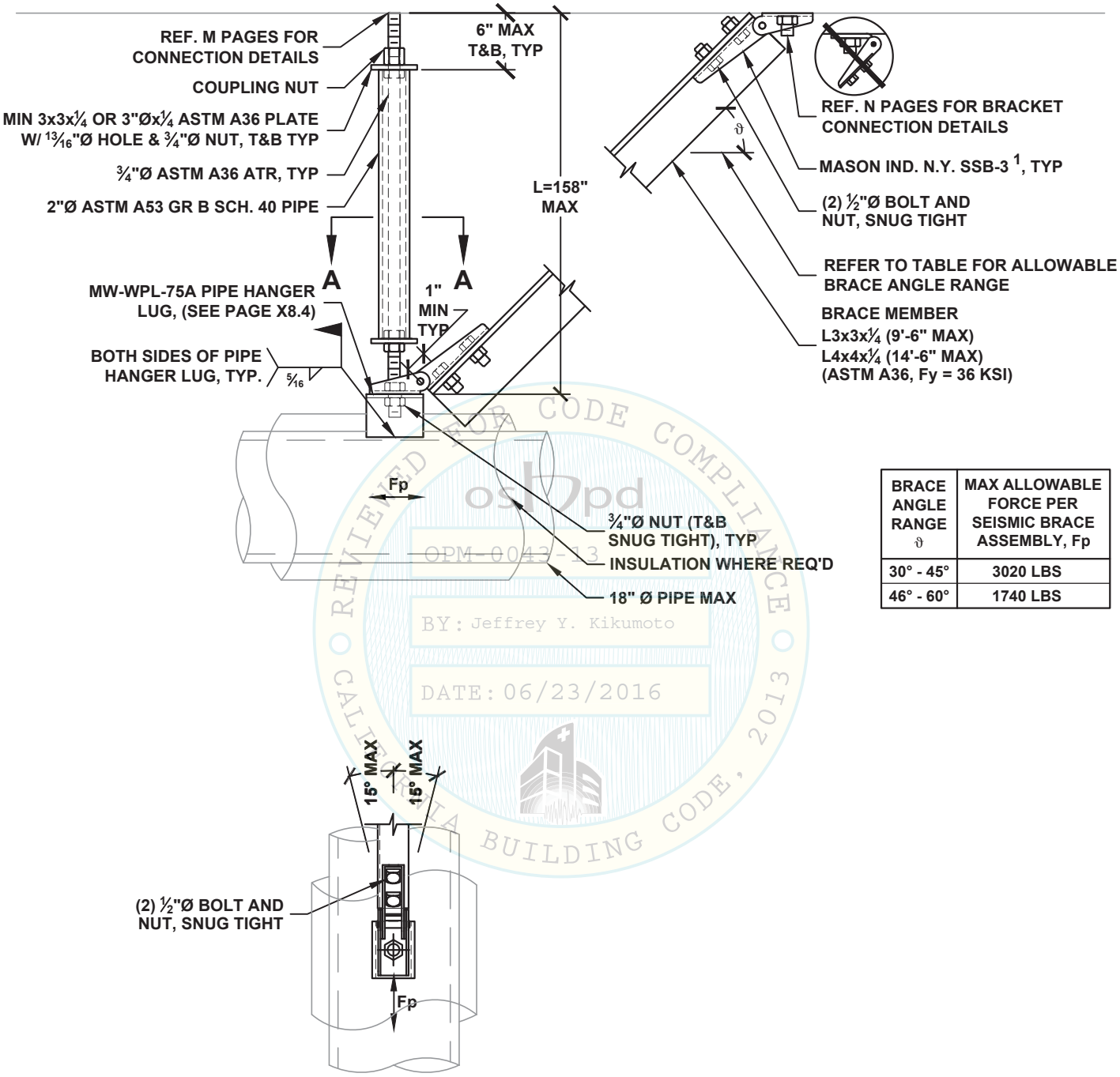

BRACE ANGLE RANGE ϑ	MAX ALLOWABLE FORCE PER SEISMIC BRACE ASSEMBLY, Fp
30° - 45°	3020 LBS
46° - 60°	1740 LBS

REVIEWED FOR CODE COMPLIANCE
CALIFORNIA BUILDING CODE, 2013
oshpd
OPM-0043-13
BY: Jeffrey Y. Kikumoto
DATE: 06/23/2016

VIEW A-A

NOTES:

1. REF. SECTION A10 FOR GENERAL NOTES.

MASON WEST, INC.
1601 E. Miraloma Ave. Placentia, CA 92870
TEL (714) 630 - 0701, www.masonwest.com

Jiefu "Jeff" Zhang, SE
California SE No. S5270

PAGE
C1.47.1

HANGER ROD DIAMETER = ¾"	PIPING ALL-DIRECTIONAL SEISMIC SOLID BRACING SYSTEM 18"Ø PIPE MAX	KIT OPTIONS S3A

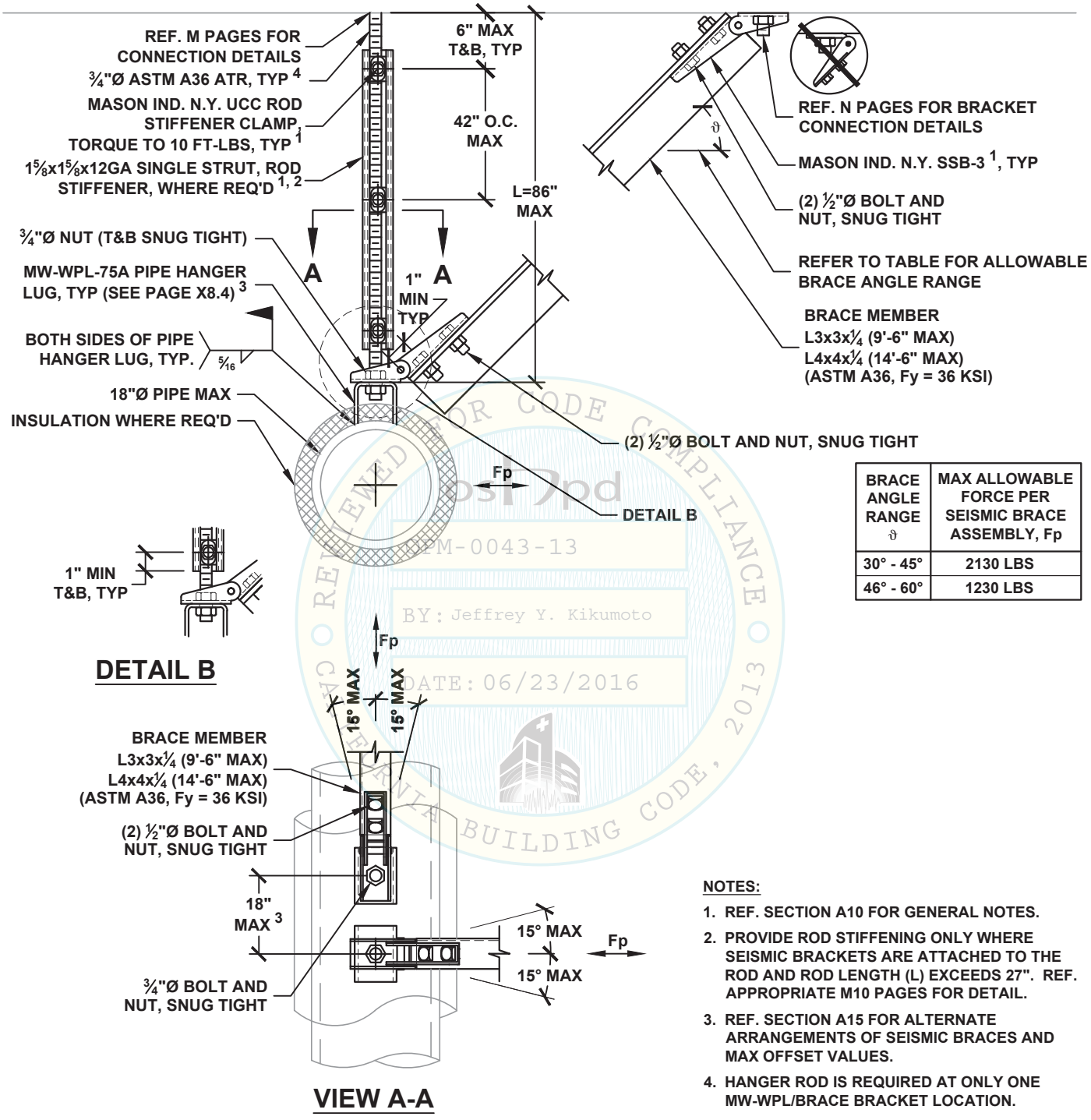

BRACE ANGLE RANGE ϑ	MAX ALLOWABLE FORCE PER SEISMIC BRACE ASSEMBLY, Fp
30° - 45°	2130 LBS
46° - 60°	1230 LBS

REVIEWED FOR CODE COMPLIANCE
CALIFORNIA BUILDING CODE, 2013
OPM-0043-13
BY: Jeffrey Y. Kikumoto
DATE: 06/23/2016

NOTES:

1. REF. SECTION A10 FOR GENERAL NOTES.
2. PROVIDE ROD STIFFENING ONLY WHERE SEISMIC BRACKETS ARE ATTACHED TO THE ROD AND ROD LENGTH (L) EXCEEDS 27". REF. APPROPRIATE M10 PAGES FOR DETAIL.
3. REF. SECTION A15 FOR ALTERNATE ARRANGEMENTS OF SEISMIC BRACES AND MAX OFFSET VALUES.
4. HANGER ROD IS REQUIRED AT ONLY ONE MW-WPL/BRACE BRACKET LOCATION.

MASON WEST, INC.
1601 E. Miraloma Ave. Placentia, CA 92870
TEL (714) 630 - 0701, www.masonwest.com

Jiefu "Jeff" Zhang, SE
California SE No. S5270

PAGE
C1.48

HANGER ROD DIAMETER = ¾"	PIPING ALL-DIRECTIONAL SEISMIC SOLID BRACING SYSTEM 18"Ø PIPE MAX	KIT OPTIONS S3A

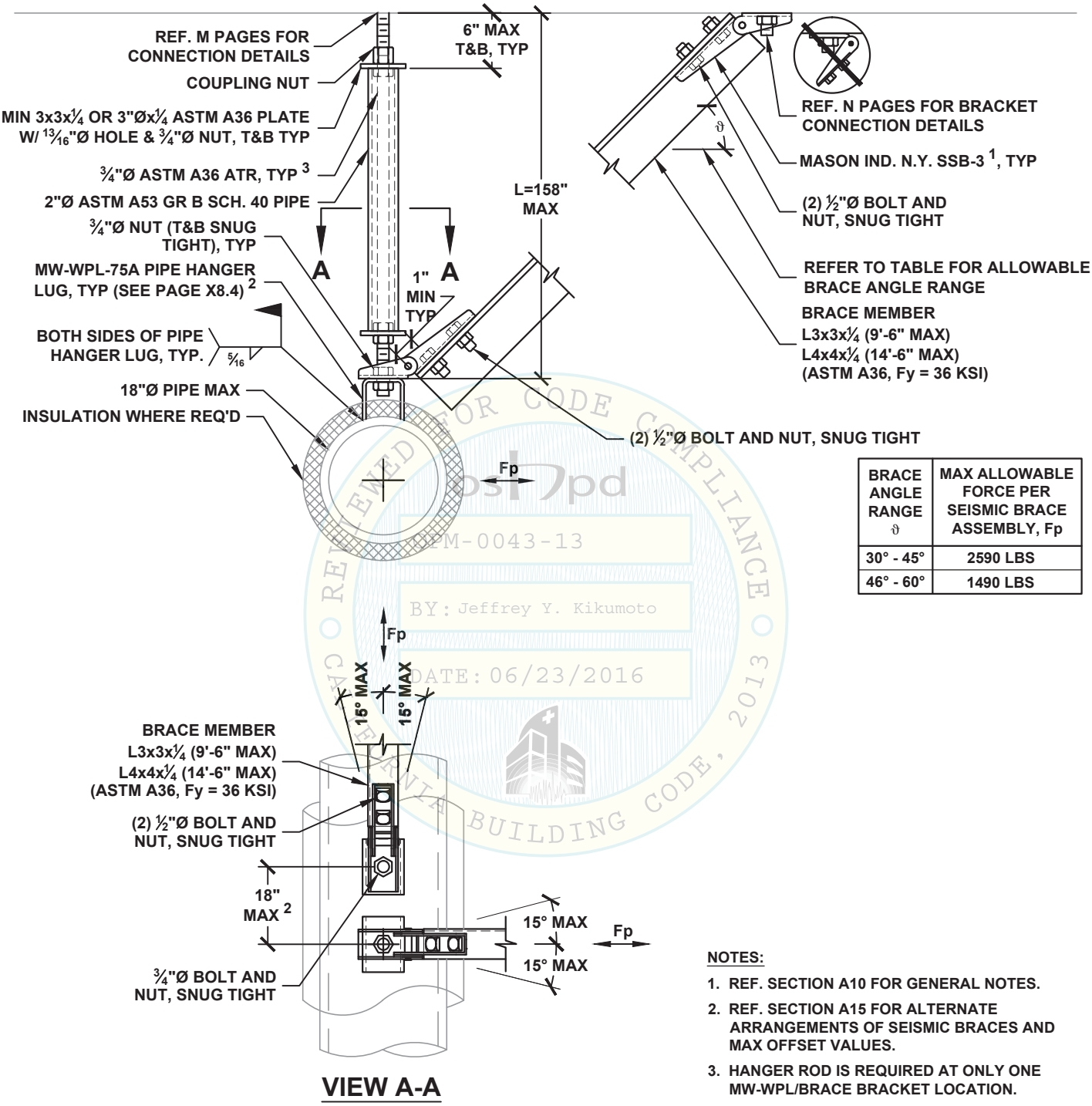

BRACE ANGLE RANGE ϑ	MAX ALLOWABLE FORCE PER SEISMIC BRACE ASSEMBLY, Fp
30° - 45°	2590 LBS
46° - 60°	1490 LBS

VIEW A-A

NOTES:

1. REF. SECTION A10 FOR GENERAL NOTES.
2. REF. SECTION A15 FOR ALTERNATE ARRANGEMENTS OF SEISMIC BRACES AND MAX OFFSET VALUES.
3. HANGER ROD IS REQUIRED AT ONLY ONE MW-WPL/BRACE BRACKET LOCATION.

REVIEWED FOR CODE COMPLIANCE
CALIFORNIA BUILDING CODE, 2013
OPM-0043-13
BY: Jeffrey Y. Kikumoto
DATE: 06/23/2016

MASON WEST, INC.
1601 E. Miraloma Ave. Placentia, CA 92870
TEL (714) 630 - 0701, www.masonwest.com

Jiefu "Jeff" Zhang, SE
California SE No. S5270

PAGE
C1.48.1

HANGER ROD DIAMETER = 7/8"	PIPING TRANSVERSE SEISMIC SOLID BRACING SYSTEM 12"Ø PIPE MAX	KIT OPTIONS S2520T

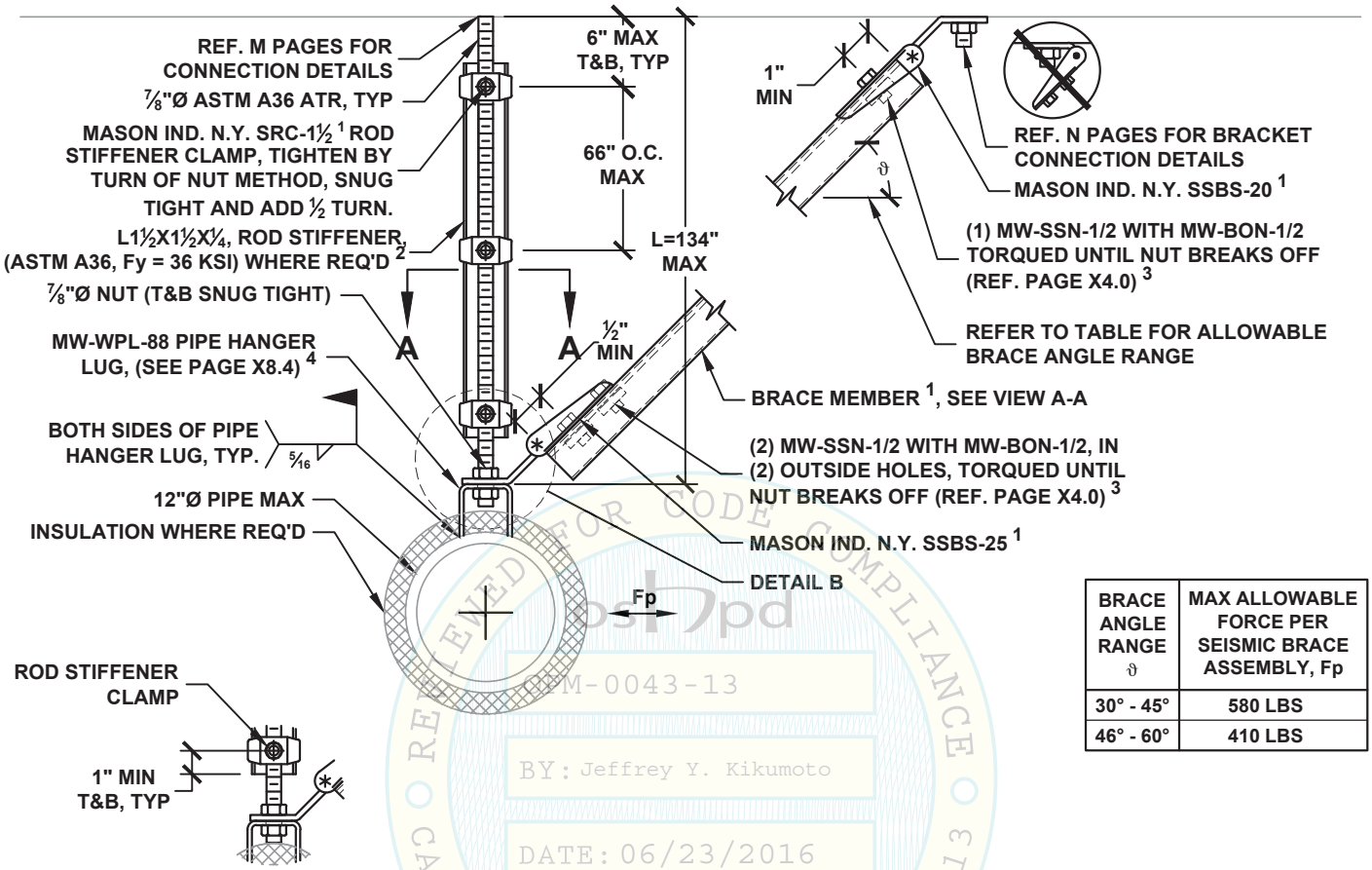

BRACE ANGLE RANGE ϑ	MAX ALLOWABLE FORCE PER SEISMIC BRACE ASSEMBLY, Fp
30° - 45°	580 LBS
46° - 60°	410 LBS

DETAIL B

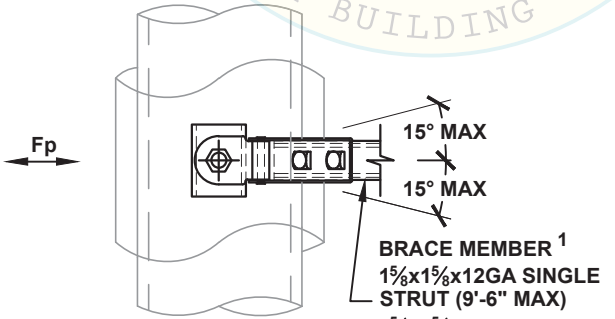

VIEW A-A

REVIEWED FOR CODE COMPLIANCE
CALIFORNIA BUILDING CODE, 2013
OPM-0043-13
BY: Jeffrey Y. Kikumoto
DATE: 06/23/2016

NOTES:

1. REF. SECTION A10 FOR GENERAL NOTES.
2. PROVIDE ROD STIFFENING ONLY WHERE SEISMIC BRACKETS ARE ATTACHED TO THE ROD AND ROD LENGTH (L) EXCEEDS 43". REF. APPROPRIATE M10 PAGES FOR DETAIL.
3. WHEN THE BRACE IS INSTALLED INSIDE OF THE BRACE BRACKET, ONLY THE CENTER MOUNTING HOLE IS REQUIRED TO BE FASTENED, REF X2.3 FOR CONNECTION DETAILS.
4. REF. SECTION A15 FOR ALTERNATIVE ARRANGEMENT OF SEISMIC BRACES.

MASON WEST, INC.
1601 E. Miraloma Ave. Placentia, CA 92870
TEL (714) 630 - 0701, www.masonwest.com

Jiefu "Jeff" Zhang, SE
California SE No. S5270

PAGE
C1.50

HANGER ROD DIAMETER = 7/8"	PIPING LONGITUDINAL SEISMIC SOLID BRACING SYSTEM 12"Ø PIPE MAX	KIT OPTIONS S2520L

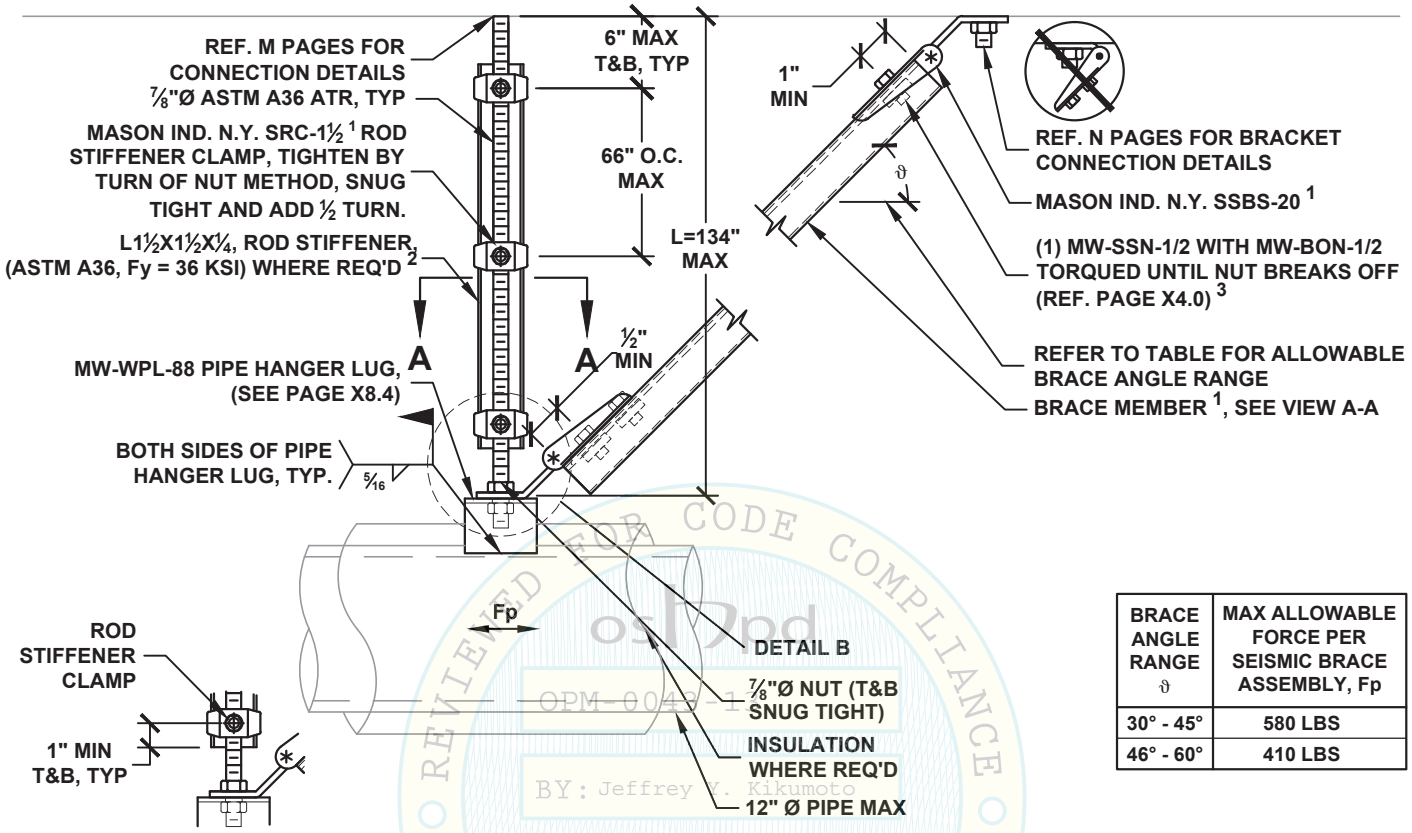

DETAIL B

BRACE ANGLE RANGE ϑ	MAX ALLOWABLE FORCE PER SEISMIC BRACE ASSEMBLY, Fp
30° - 45°	580 LBS
46° - 60°	410 LBS

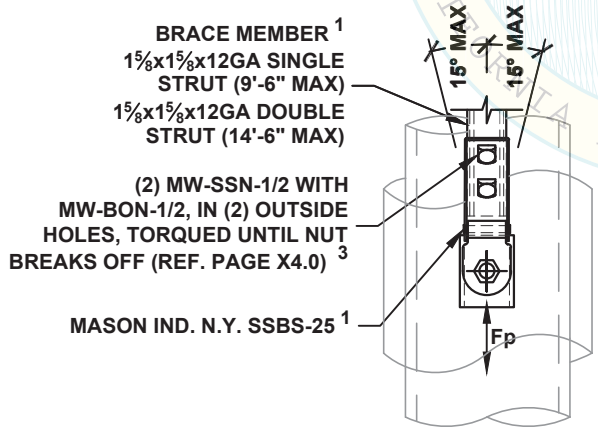

VIEW A-A

NOTES:

1. REF. SECTION A10 FOR GENERAL NOTES.
2. PROVIDE ROD STIFFENING ONLY WHERE SEISMIC BRACKETS ARE ATTACHED TO THE ROD AND ROD LENGTH (L) EXCEEDS 43". REF. APPROPRIATE M10 PAGES FOR DETAIL.
3. WHEN THE BRACE IS INSTALLED INSIDE OF THE BRACE BRACKET, ONLY THE CENTER MOUNTING HOLE IS REQUIRED TO BE FASTENED, REF X2.3 FOR CONNECTION DETAILS.

REVIEWED FOR CODE COMPLIANCE
CALIFORNIA BUILDING CODE, 2013
OPM-0043-13
BY: Jeffrey Y. Kikumoto
DATE: 06/23/2016

MASON WEST, INC.
1601 E. Miraloma Ave. Placentia, CA 92870
TEL (714) 630 - 0701, www.masonwest.com

Jiefu "Jeff" Zhang, SE
California SE No. S5270

PAGE
C1.51

HANGER ROD DIAMETER = 7/8"	PIPING ALL-DIRECTIONAL SEISMIC SOLID BRACING SYSTEM 12"Ø PIPE MAX	KIT OPTIONS S2520A

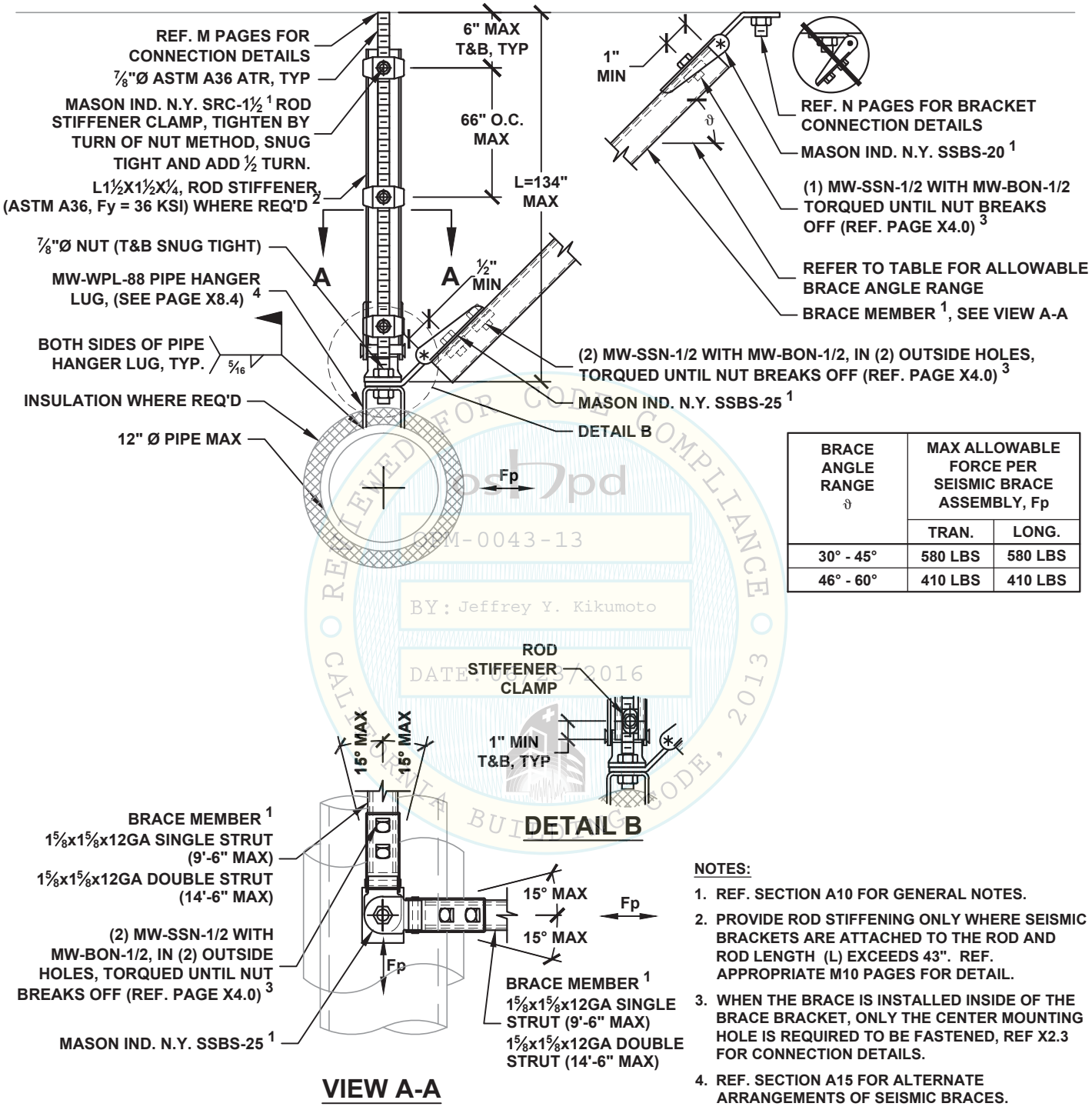

BRACE ANGLE RANGE ϑ	MAX ALLOWABLE FORCE PER SEISMIC BRACE ASSEMBLY, Fp	
	TRAN.	LONG.
30° - 45°	580 LBS	580 LBS
46° - 60°	410 LBS	410 LBS

RECEIVED FOR CODE COMPLIANCE
CALIFORNIA BUILDING CODE, 2013
OPM-0043-13
BY: Jeffrey Y. Kikumoto
DATE: 06/23/2016

NOTES:

1. REF. SECTION A10 FOR GENERAL NOTES.
2. PROVIDE ROD STIFFENING ONLY WHERE SEISMIC BRACKETS ARE ATTACHED TO THE ROD AND ROD LENGTH (L) EXCEEDS 43". REF. APPROPRIATE M10 PAGES FOR DETAIL.
3. WHEN THE BRACE IS INSTALLED INSIDE OF THE BRACE BRACKET, ONLY THE CENTER MOUNTING HOLE IS REQUIRED TO BE FASTENED, REF X2.3 FOR CONNECTION DETAILS.
4. REF. SECTION A15 FOR ALTERNATE ARRANGEMENTS OF SEISMIC BRACES.

MASON WEST, INC.
1601 E. Miraloma Ave. Placentia, CA 92870
TEL (714) 630 - 0701, www.masonwest.com

Jiefu "Jeff" Zhang, SE
California SE No. S5270

PAGE
C1.52

HANGER ROD DIAMETER = 1"	PIPING TRANSVERSE SEISMIC SOLID BRACING SYSTEM 18"Ø PIPE MAX	KIT OPTIONS S2520T

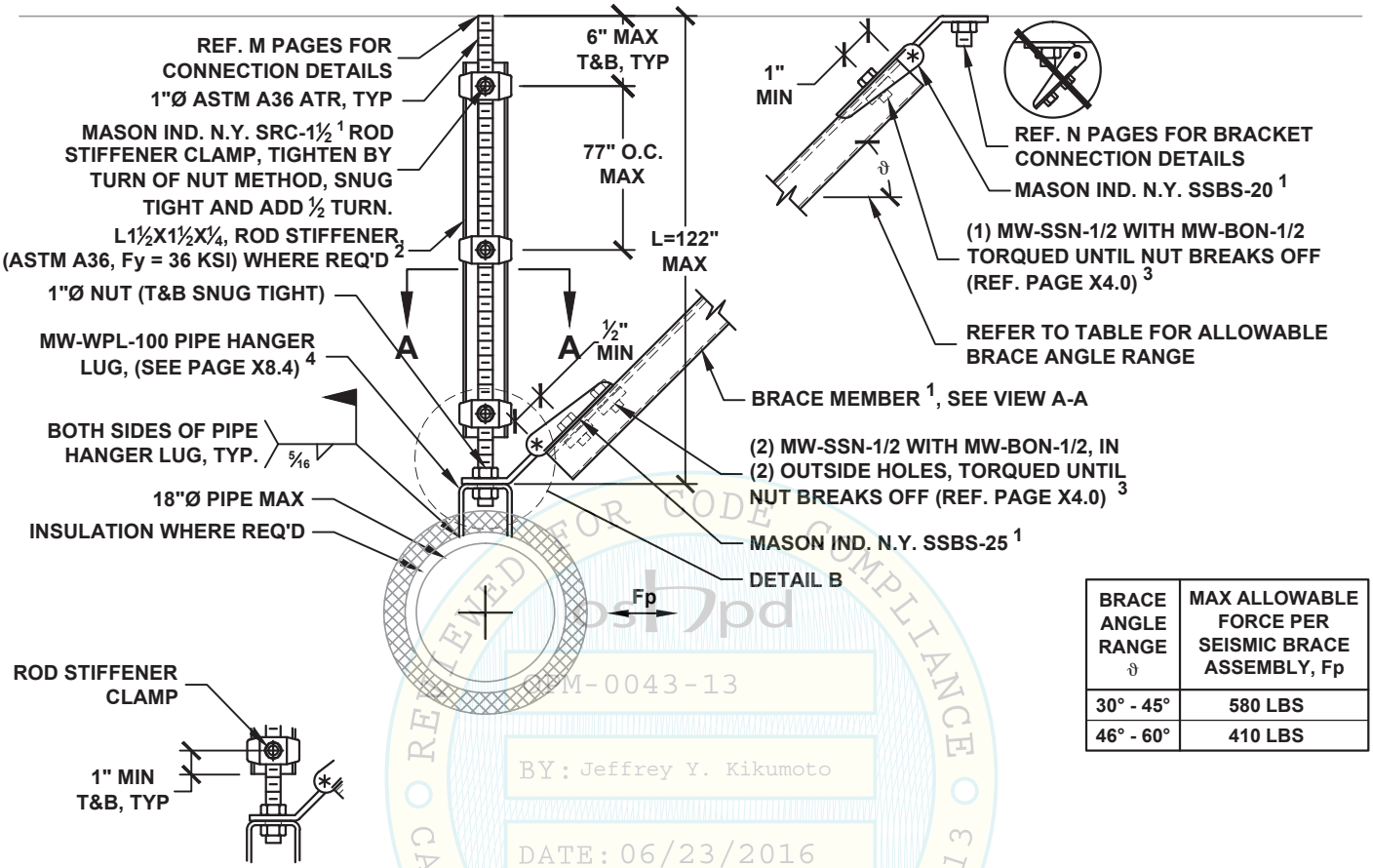

BRACE ANGLE RANGE ϑ	MAX ALLOWABLE FORCE PER SEISMIC BRACE ASSEMBLY, Fp
30° - 45°	580 LBS
46° - 60°	410 LBS

DETAIL B

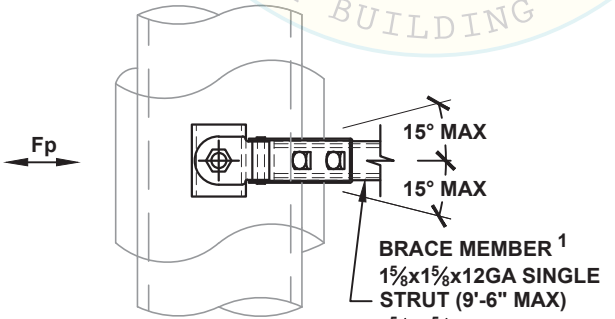

VIEW A-A

REVIEWED FOR CODE COMPLIANCE
CALIFORNIA BUILDING CODE, 2013
OPM-0043-13
BY: Jeffrey Y. Kikumoto
DATE: 06/23/2016

NOTES:

1. REF. SECTION A10 FOR GENERAL NOTES.
2. PROVIDE ROD STIFFENING ONLY WHERE SEISMIC BRACKETS ARE ATTACHED TO THE ROD AND ROD LENGTH (L) EXCEEDS 50". REF. APPROPRIATE M10 PAGES FOR DETAIL.
3. WHEN THE BRACE IS INSTALLED INSIDE OF THE BRACE BRACKET, ONLY THE CENTER MOUNTING HOLE IS REQUIRED TO BE FASTENED, REF X2.3 FOR CONNECTION DETAILS.
4. REF. SECTION A15 FOR ALTERNATIVE ARRANGEMENT OF SEISMIC BRACES.

MASON WEST, INC.
1601 E. Miraloma Ave. Placentia, CA 92870
TEL (714) 630 - 0701, www.masonwest.com

Jiefu "Jeff" Zhang, SE
California SE No. S5270

PAGE
C1.60

HANGER ROD DIAMETER = 1"	PIPING LONGITUDINAL SEISMIC SOLID BRACING SYSTEM 18"Ø PIPE MAX	KIT OPTIONS S2520L

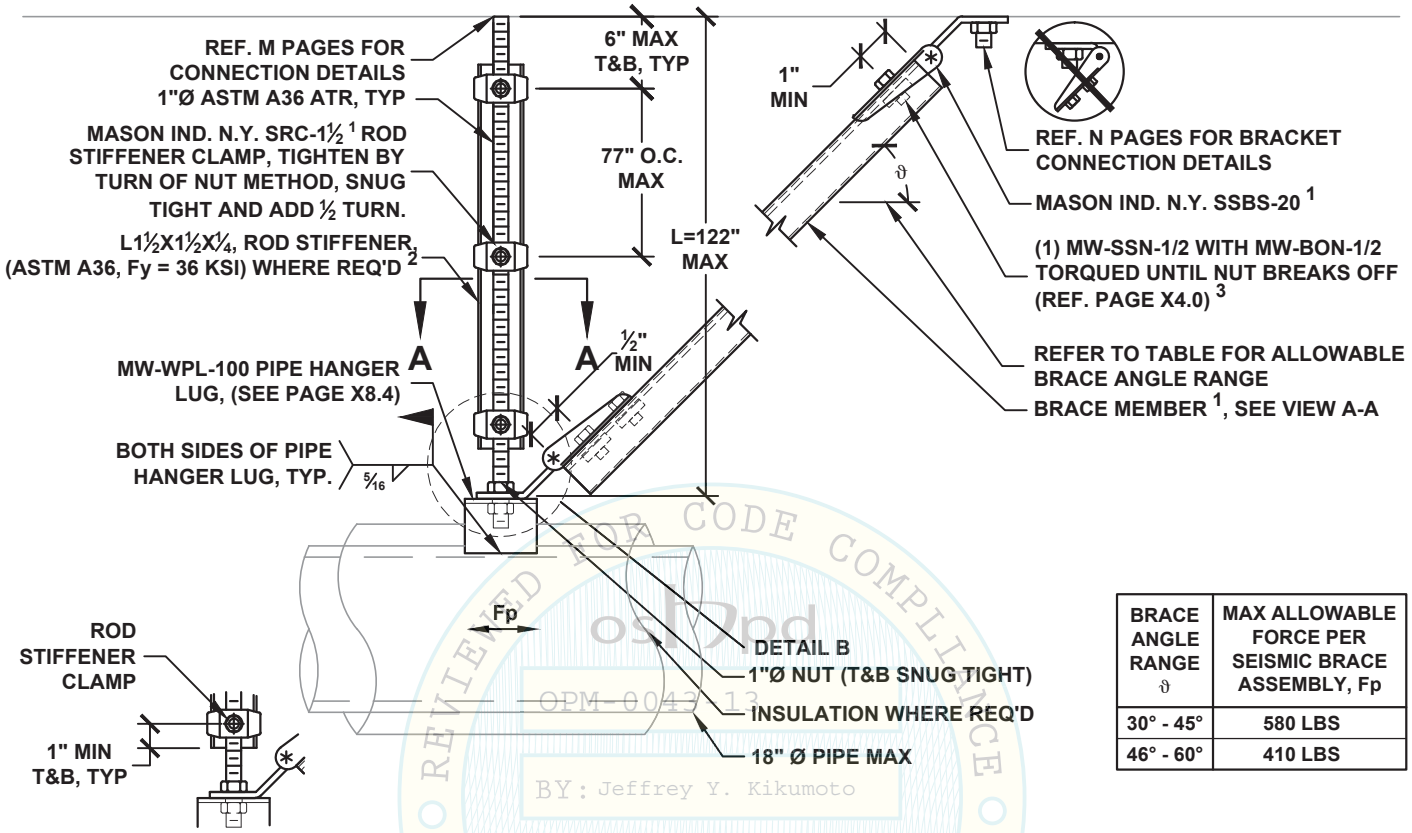

BRACE ANGLE RANGE ϑ	MAX ALLOWABLE FORCE PER SEISMIC BRACE ASSEMBLY, Fp
30° - 45°	580 LBS
46° - 60°	410 LBS

DETAIL B

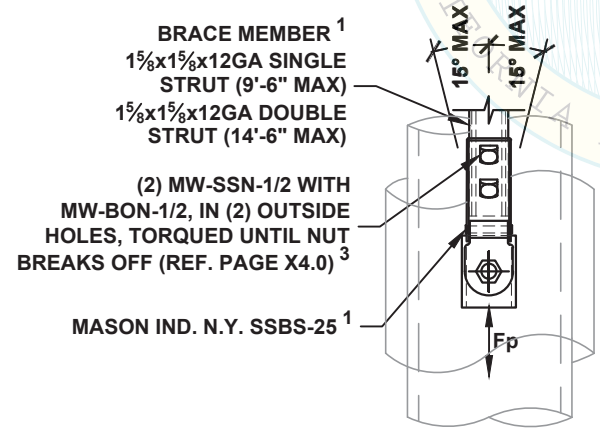

VIEW A-A

NOTES:

1. REF. SECTION A10 FOR GENERAL NOTES.
2. PROVIDE ROD STIFFENING ONLY WHERE SEISMIC BRACKETS ARE ATTACHED TO THE ROD AND ROD LENGTH (L) EXCEEDS 50". REF. APPROPRIATE M10 PAGES FOR DETAIL.
3. WHEN THE BRACE IS INSTALLED INSIDE OF THE BRACE BRACKET, ONLY THE CENTER MOUNTING HOLE IS REQUIRED TO BE FASTENED, REF X2.3 FOR CONNECTION DETAILS.

REVIEWED FOR CODE COMPLIANCE
CALIFORNIA BUILDING CODE, 2013
OPM-0043-13
BY: Jeffrey Y. Kikumoto
DATE: 06/23/2016

MASON WEST, INC.
1601 E. Miraloma Ave. Placentia, CA 92870
TEL (714) 630 - 0701, www.masonwest.com

Jiefu "Jeff" Zhang, SE
California SE No. S5270

HANGER ROD DIAMETER = 1"	PIPING ALL-DIRECTIONAL SEISMIC SOLID BRACING SYSTEM 18"Ø PIPE MAX	KIT OPTIONS S2520A

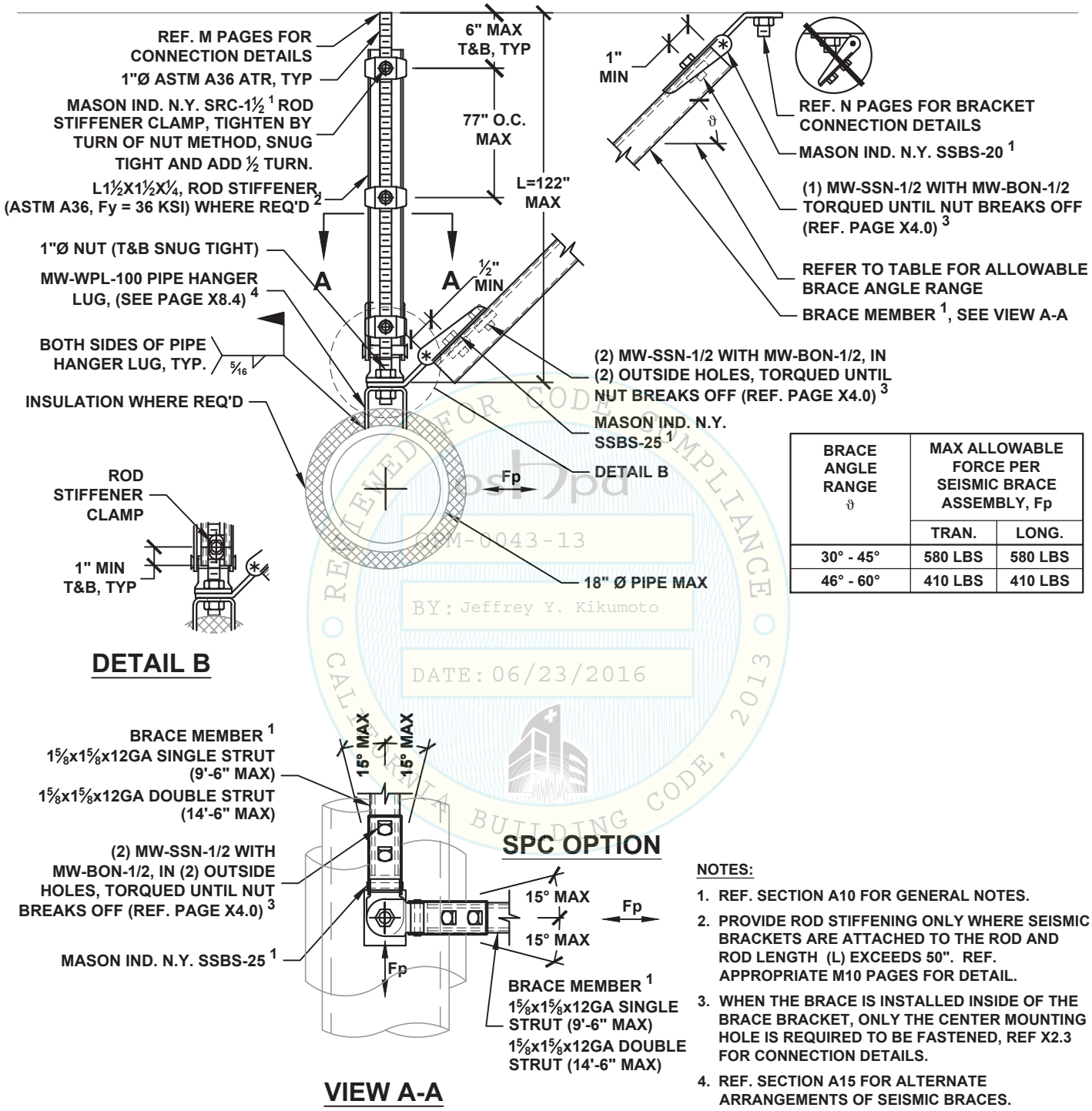

BRACE ANGLE RANGE ϑ	MAX ALLOWABLE FORCE PER SEISMIC BRACE ASSEMBLY, Fp	
	TRAN.	LONG.
30° - 45°	580 LBS	580 LBS
46° - 60°	410 LBS	410 LBS

DETAIL B

SPC OPTION

VIEW A-A

NOTES:

1. REF. SECTION A10 FOR GENERAL NOTES.
2. PROVIDE ROD STIFFENING ONLY WHERE SEISMIC BRACKETS ARE ATTACHED TO THE ROD AND ROD LENGTH (L) EXCEEDS 50". REF. APPROPRIATE M10 PAGES FOR DETAIL.
3. WHEN THE BRACE IS INSTALLED INSIDE OF THE BRACE BRACKET, ONLY THE CENTER MOUNTING HOLE IS REQUIRED TO BE FASTENED, REF X2.3 FOR CONNECTION DETAILS.
4. REF. SECTION A15 FOR ALTERNATE ARRANGEMENTS OF SEISMIC BRACES.

REVIEWED FOR CODE COMPLIANCE
CALIFORNIA BUILDING CODE, 2013
OPM-0043-13
BY: Jeffrey Y. Kikumoto
DATE: 06/23/2016

MASON WEST, INC.
1601 E. Miraloma Ave. Placentia, CA 92870
TEL (714) 630 - 0701, www.masonwest.com

Jiefu "Jeff" Zhang, SE
California SE No. S5270

PAGE
C1.62

HANGER ROD DIAMETER = 1"	PIPING TRANSVERSE SEISMIC SOLID BRACING SYSTEM 18"Ø PIPE MAX	KIT OPTIONS S4T

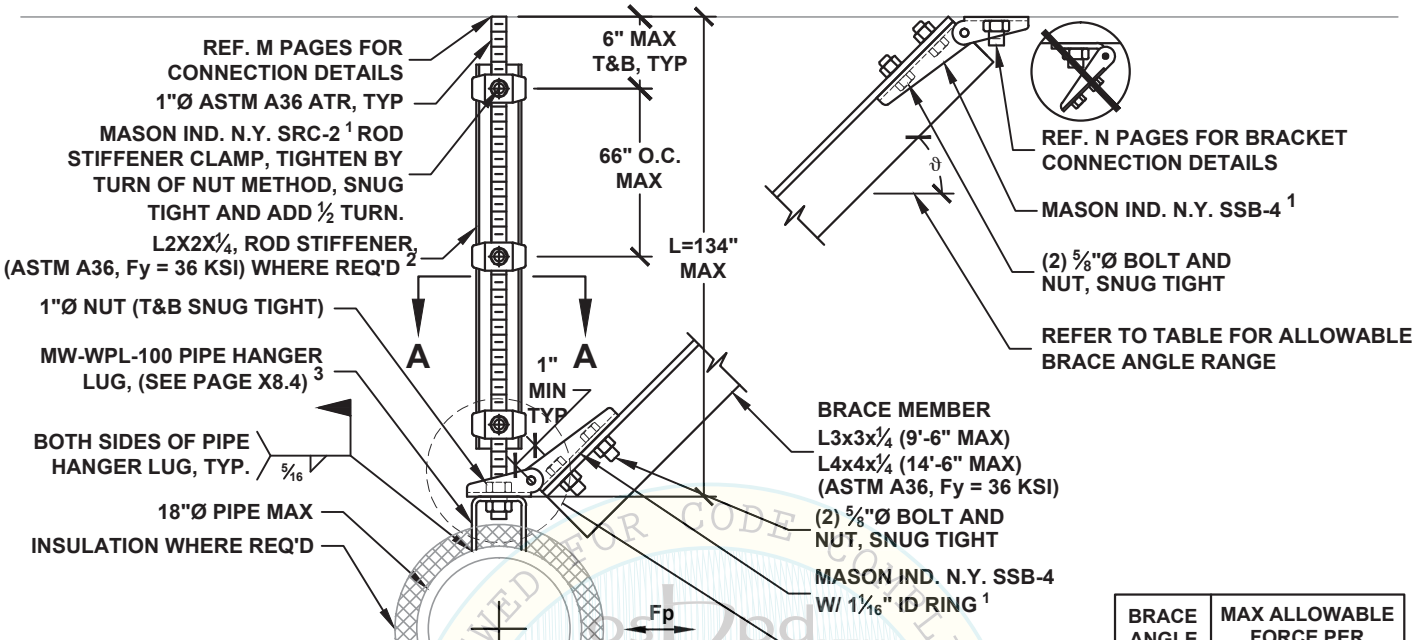

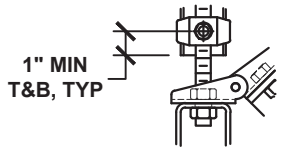

DETAIL B

BRACE ANGLE RANGE ϑ	MAX ALLOWABLE FORCE PER SEISMIC BRACE ASSEMBLY, Fp
30° - 45°	3000 LBS
46° - 60°	2220 LBS

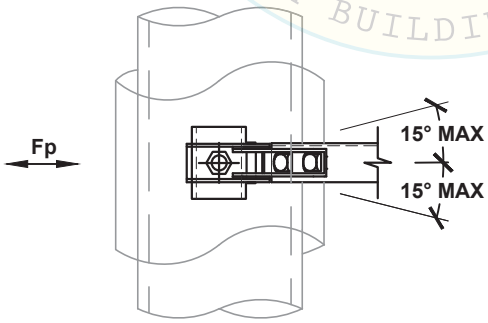

VIEW A-A

NOTES:

1. REF. SECTION A10 FOR GENERAL NOTES.
2. PROVIDE ROD STIFFENING ONLY WHERE SEISMIC BRACKETS ARE ATTACHED TO THE ROD AND ROD LENGTH (L) EXCEEDS 43". REF. APPROPRIATE M10 PAGES FOR DETAIL.
3. REF. SECTION A15 FOR ALTERNATE ARRANGEMENT OF SEISMIC BRACES.

REVIEWED FOR CODE COMPLIANCE
CALIFORNIA BUILDING CODE, 2013
OPM-0043-13
BY: Jeffrey Y. Kikumoto
DATE: 06/23/2016

MASON WEST, INC.
1601 E. Miraloma Ave. Placentia, CA 92870
TEL (714) 630 - 0701, www.masonwest.com

Jiefu "Jeff" Zhang, SE
California SE No. S5270

PAGE
C1.63

HANGER ROD DIAMETER = 1"	PIPING LONGITUDINAL SEISMIC SOLID BRACING SYSTEM 18"Ø PIPE MAX	KIT OPTIONS S4L

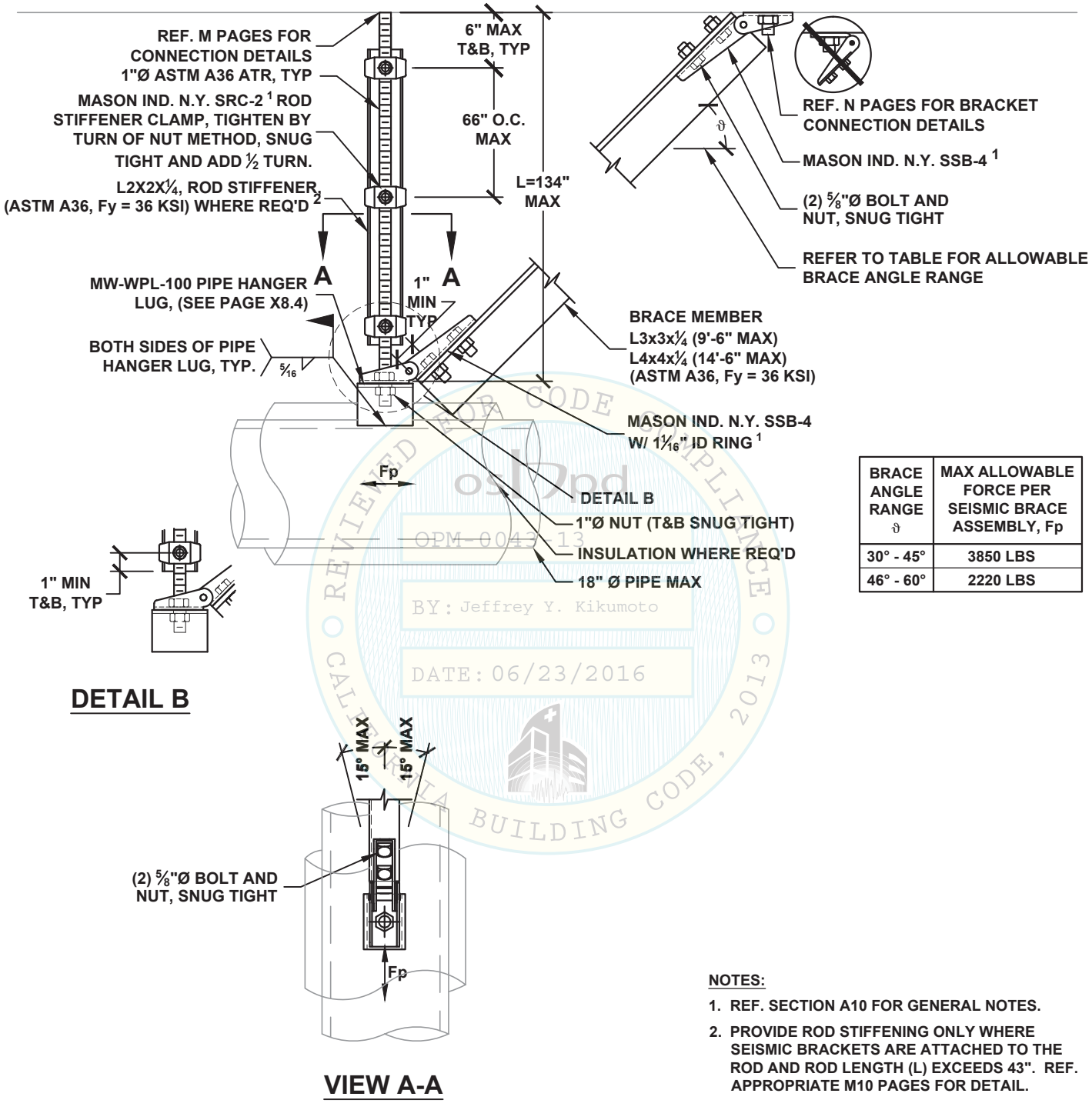

BRACE ANGLE RANGE ϑ	MAX ALLOWABLE FORCE PER SEISMIC BRACE ASSEMBLY, Fp
30° - 45°	3850 LBS
46° - 60°	2220 LBS

DETAIL B

VIEW A-A

REVIEWED FOR CODE COMPLIANCE ○ CALIFORNIA BUILDING CODE, 2013 ○
OPM-0043-13
BY: Jeffrey Y. Kikumoto
DATE: 06/23/2016

NOTES:

1. REF. SECTION A10 FOR GENERAL NOTES.
2. PROVIDE ROD STIFFENING ONLY WHERE SEISMIC BRACKETS ARE ATTACHED TO THE ROD AND ROD LENGTH (L) EXCEEDS 43". REF. APPROPRIATE M10 PAGES FOR DETAIL.

MASON WEST, INC.
1601 E. Miraloma Ave. Placentia, CA 92870
TEL (714) 630 - 0701, www.masonwest.com

Jiefu "Jeff" Zhang, SE
California SE No. S5270

PAGE
C1.64

HANGER ROD DIAMETER = 1"	PIPING ALL-DIRECTIONAL SEISMIC SOLID BRACING SYSTEM 18"Ø PIPE MAX	KIT OPTIONS S4A

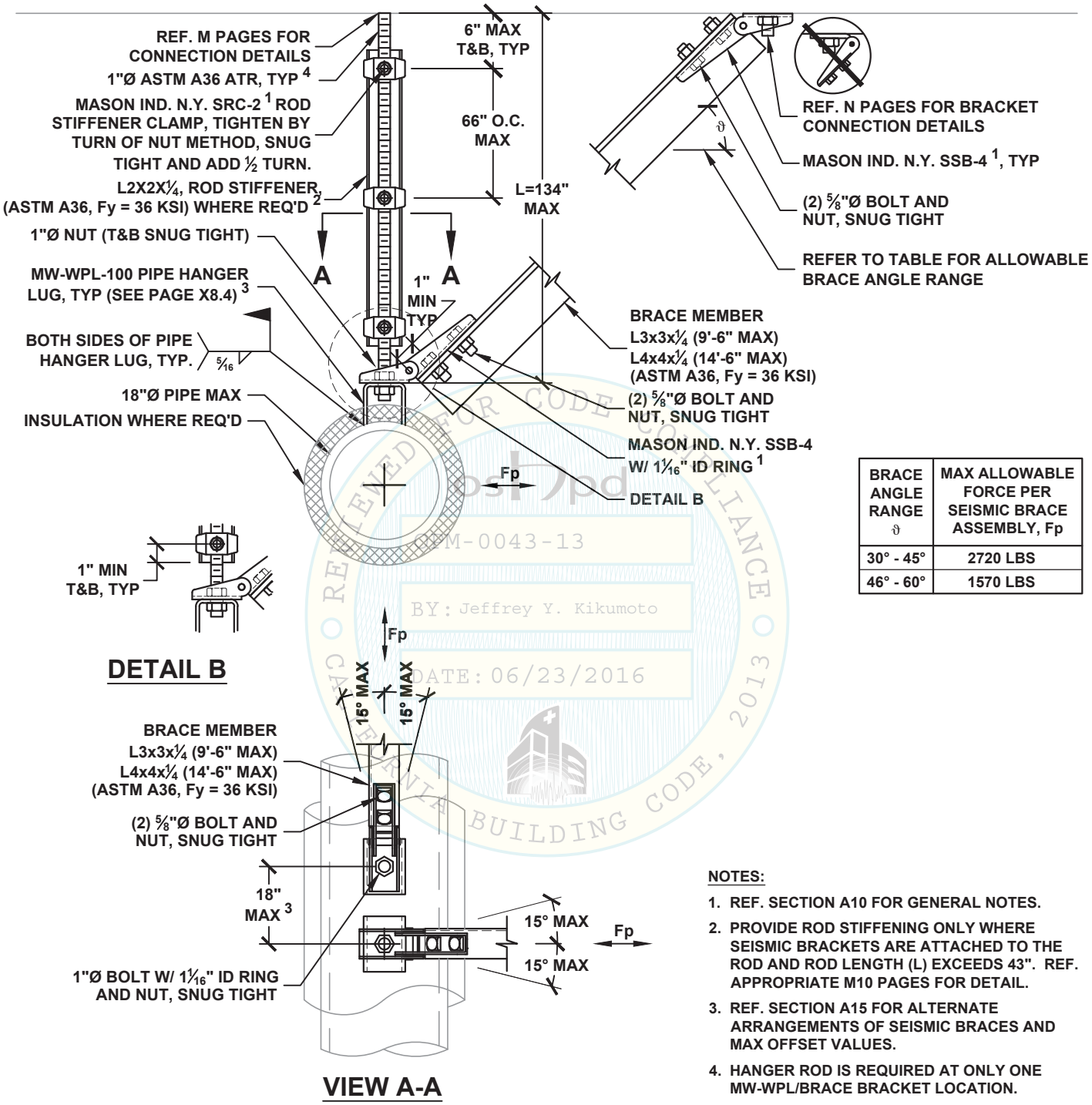

BRACE ANGLE RANGE ϑ	MAX ALLOWABLE FORCE PER SEISMIC BRACE ASSEMBLY, Fp
30° - 45°	2720 LBS
46° - 60°	1570 LBS

REVIEWED FOR CODE COMPLIANCE
CALIFORNIA BUILDING CODE, 2013
OPM-0043-13
BY: Jeffrey Y. Kikumoto
DATE: 06/23/2016

NOTES:

1. REF. SECTION A10 FOR GENERAL NOTES.
2. PROVIDE ROD STIFFENING ONLY WHERE SEISMIC BRACKETS ARE ATTACHED TO THE ROD AND ROD LENGTH (L) EXCEEDS 43". REF. APPROPRIATE M10 PAGES FOR DETAIL.
3. REF. SECTION A15 FOR ALTERNATE ARRANGEMENTS OF SEISMIC BRACES AND MAX OFFSET VALUES.
4. HANGER ROD IS REQUIRED AT ONLY ONE MW-WPL/BRACE BRACKET LOCATION.

MASON WEST, INC.
1601 E. Miraloma Ave. Placentia, CA 92870
TEL (714) 630 - 0701, www.masonwest.com

Jiefu "Jeff" Zhang, SE
California SE No. S5270

PAGE
C1.65

HANGER ROD DIAMETER = 1¼"	PIPING TRANSVERSE SEISMIC SOLID BRACING SYSTEM 24"Ø PIPE MAX	KIT OPTIONS S4T

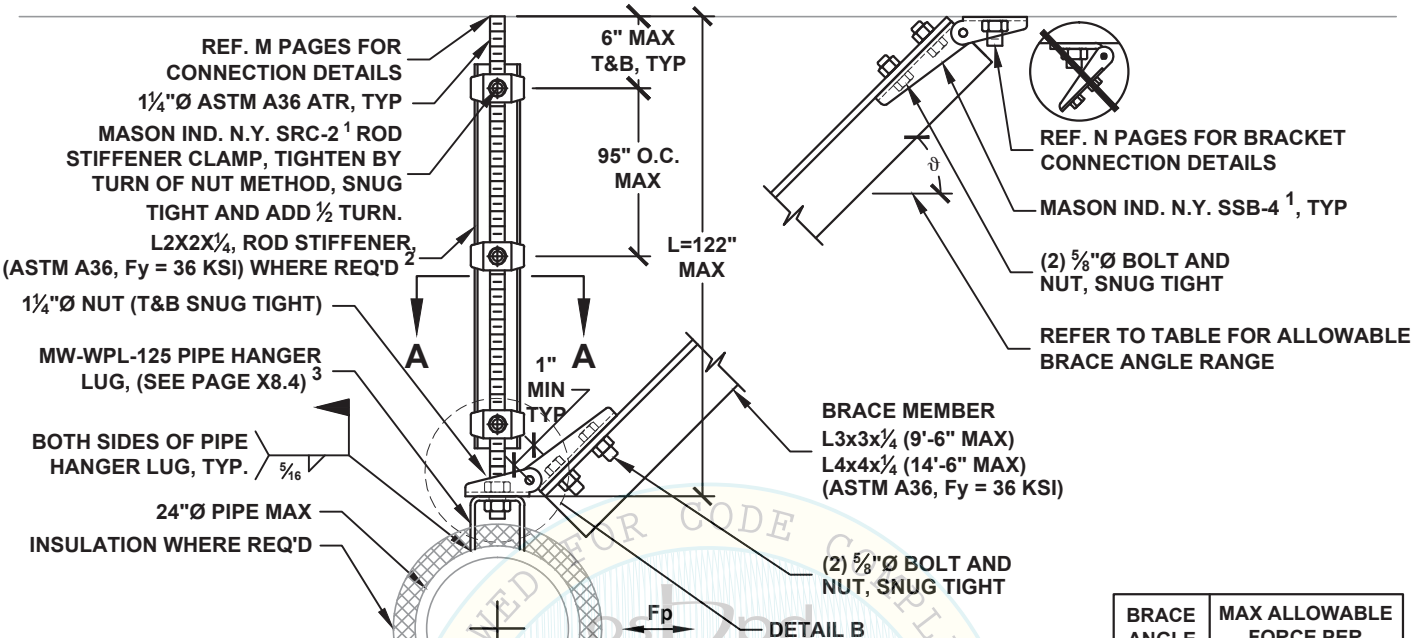

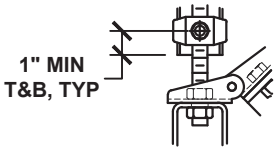

DETAIL B

BRACE ANGLE RANGE ϑ	MAX ALLOWABLE FORCE PER SEISMIC BRACE ASSEMBLY, Fp
30° - 45°	4230 LBS
46° - 60°	2600 LBS

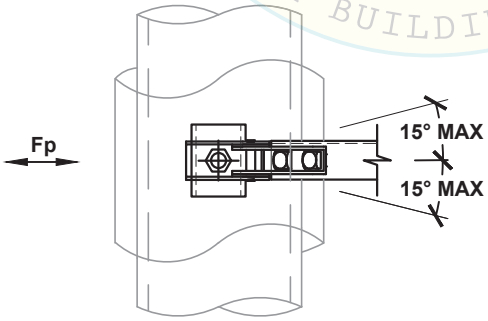

VIEW A-A

REVIEWED FOR CODE COMPLIANCE
CALIFORNIA BUILDING CODE, 2013
OPM-0043-13
BY: Jeffrey Y. Kikumoto
DATE: 06/23/2016

NOTES:

1. REF. SECTION A10 FOR GENERAL NOTES.
2. PROVIDE ROD STIFFENING ONLY WHERE SEISMIC BRACKETS ARE ATTACHED TO THE ROD AND ROD LENGTH (L) EXCEEDS 62". REF. APPROPRIATE M10 PAGES FOR DETAIL.
3. REF. SECTION A15 FOR ALTERNATE ARRANGEMENTS OF SEISMIC BRACES.

MASON WEST, INC.
1601 E. Miraloma Ave. Placentia, CA 92870
TEL (714) 630 - 0701, www.masonwest.com

Jiefu "Jeff" Zhang, SE
California SE No. S5270

PAGE
C1.70

HANGER ROD DIAMETER = 1¼"	PIPING LONGITUDINAL SEISMIC SOLID BRACING SYSTEM 24"Ø PIPE MAX	KIT OPTIONS S4L

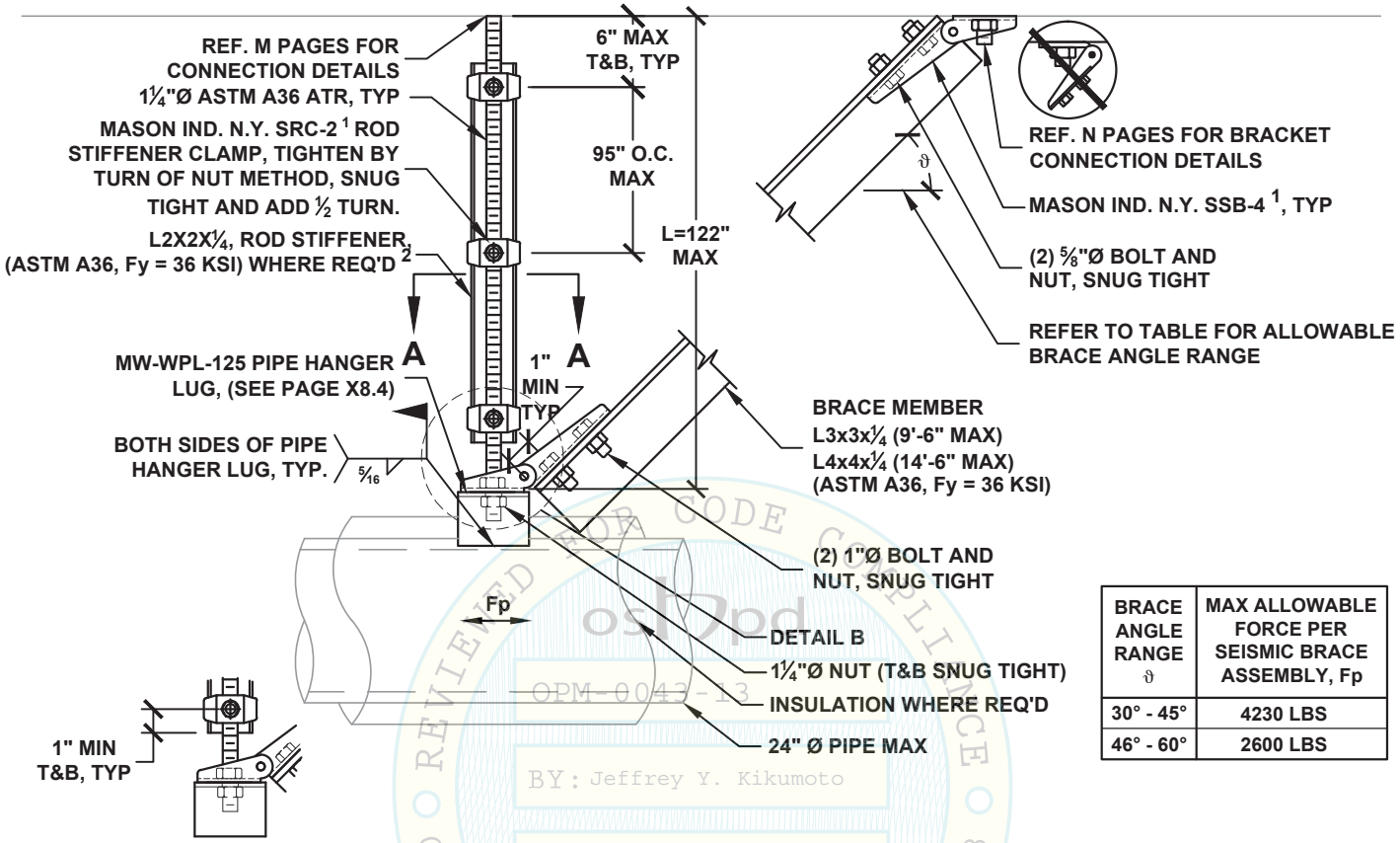

BRACE ANGLE RANGE ϑ	MAX ALLOWABLE FORCE PER SEISMIC BRACE ASSEMBLY, Fp
30° - 45°	4230 LBS
46° - 60°	2600 LBS

DETAIL B

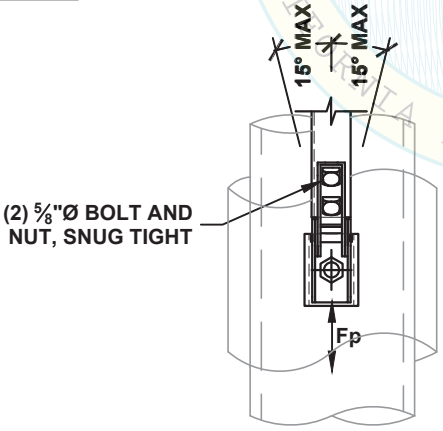

VIEW A-A

OPM-0043-13
BY: Jeffrey Y. Kikumoto
DATE: 06/23/2016
REVIEWED FOR CODE COMPLIANCE
CALIFORNIA BUILDING CODE, 2013

NOTES:

1. REF. SECTION A10 FOR GENERAL NOTES.
2. PROVIDE ROD STIFFENING ONLY WHERE SEISMIC BRACKETS ARE ATTACHED TO THE ROD AND ROD LENGTH (L) EXCEEDS 62". REF. APPROPRIATE M10 PAGES FOR DETAIL.

MASON WEST, INC.
1601 E. Miraloma Ave. Placentia, CA 92870
TEL (714) 630 - 0701, www.masonwest.com

Jiefu "Jeff" Zhang, SE
California SE No. S5270

PAGE
C1.71

HANGER ROD DIAMETER = 1¼"	PIPING ALL-DIRECTIONAL SEISMIC SOLID BRACING SYSTEM 24"Ø PIPE MAX	KIT OPTIONS S4A

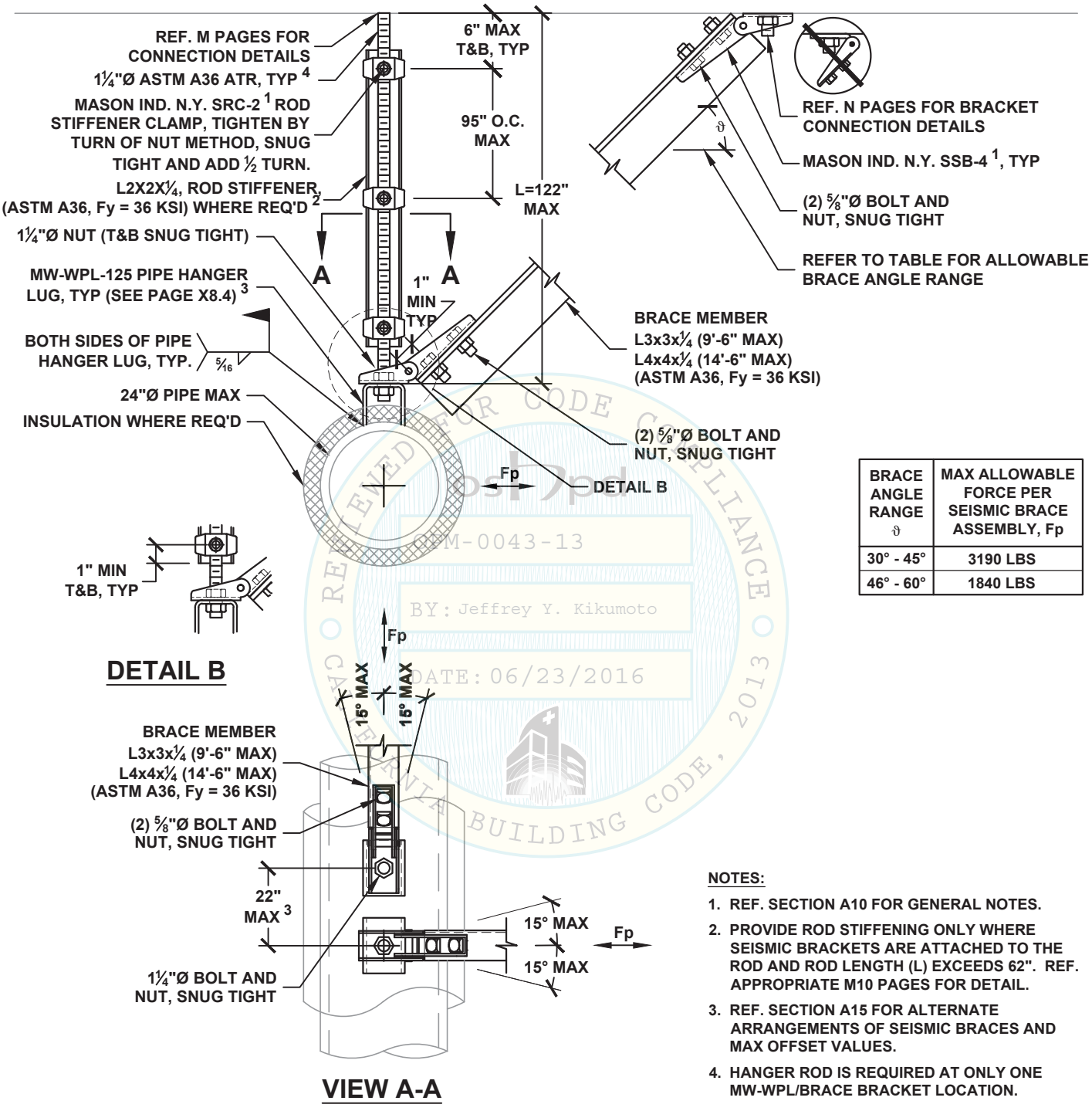

BRACE ANGLE RANGE ϑ	MAX ALLOWABLE FORCE PER SEISMIC BRACE ASSEMBLY, Fp
30° - 45°	3190 LBS
46° - 60°	1840 LBS

NOTES:

1. REF. SECTION A10 FOR GENERAL NOTES.
2. PROVIDE ROD STIFFENING ONLY WHERE SEISMIC BRACKETS ARE ATTACHED TO THE ROD AND ROD LENGTH (L) EXCEEDS 62". REF. APPROPRIATE M10 PAGES FOR DETAIL.
3. REF. SECTION A15 FOR ALTERNATE ARRANGEMENTS OF SEISMIC BRACES AND MAX OFFSET VALUES.
4. HANGER ROD IS REQUIRED AT ONLY ONE MW-WPL/BRACE BRACKET LOCATION.

REVIEWED FOR CODE COMPLIANCE
CALIFORNIA BUILDING CODE, 2013
OPM-0043-13
BY: Jeffrey Y. Kikumoto
DATE: 06/23/2016

MASON WEST, INC.
1601 E. Miraloma Ave. Placentia, CA 92870
TEL (714) 630 - 0701, www.masonwest.com

Jiefu "Jeff" Zhang, SE
California SE No. S5270

PAGE
C1.72

HANGER ROD DIAMETER = 1¼"	PIPING TRANSVERSE SEISMIC SOLID BRACING SYSTEM 24"Ø PIPE MAX	KIT OPTIONS S4T

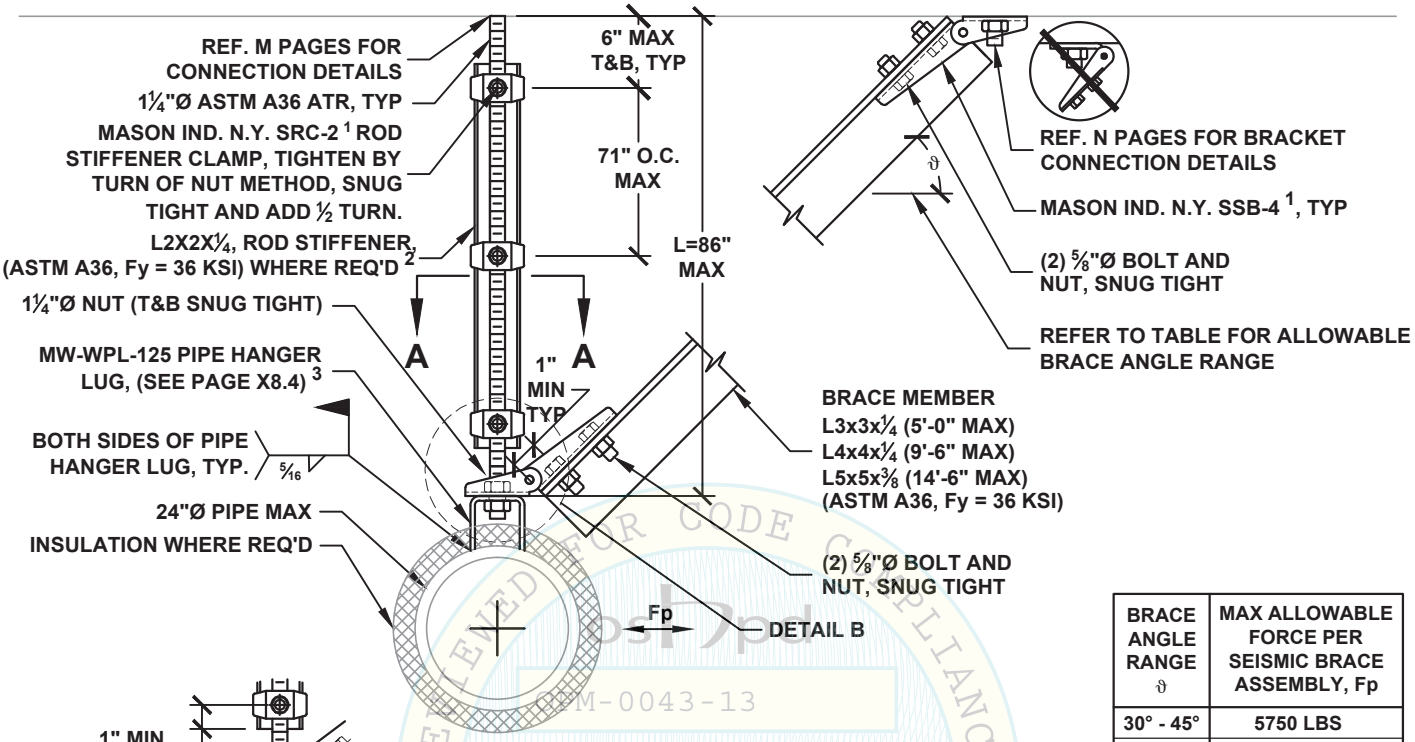

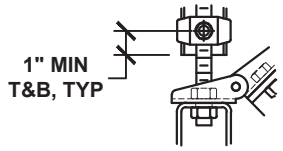

DETAIL B

BRACE ANGLE RANGE ϑ	MAX ALLOWABLE FORCE PER SEISMIC BRACE ASSEMBLY, Fp
30° - 45°	5750 LBS
46° - 60°	4100 LBS

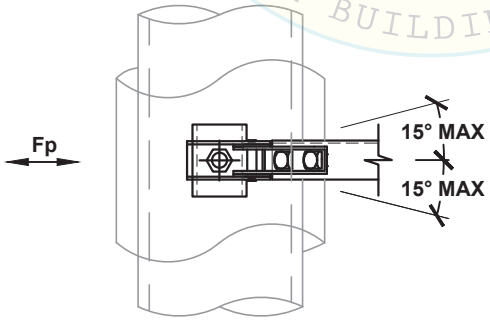

VIEW A-A

RECEIVED FOR CODE COMPLIANCE
CALIFORNIA BUILDING CODE, 2013
OPM-0043-13
BY: Jeffrey Y. Kikumoto
DATE: 06/23/2016

NOTES:

1. REF. SECTION A10 FOR GENERAL NOTES.
2. PROVIDE ROD STIFFENING ONLY WHERE SEISMIC BRACKETS ARE ATTACHED TO THE ROD AND ROD LENGTH (L) EXCEEDS 46". REF. APPROPRIATE M10 PAGES FOR DETAIL.
3. REF. SECTION A15 FOR ALTERNATE ARRANGEMENTS OF SEISMIC BRACES.

MASON WEST, INC.
1601 E. Miraloma Ave. Placentia, CA 92870
TEL (714) 630 - 0701, www.masonwest.com

Jiefu "Jeff" Zhang, SE
California SE No. S5270

PAGE
C1.73

HANGER ROD DIAMETER = 1¼"	PIPING LONGITUDINAL SEISMIC SOLID BRACING SYSTEM 24"Ø PIPE MAX	KIT OPTIONS S4L

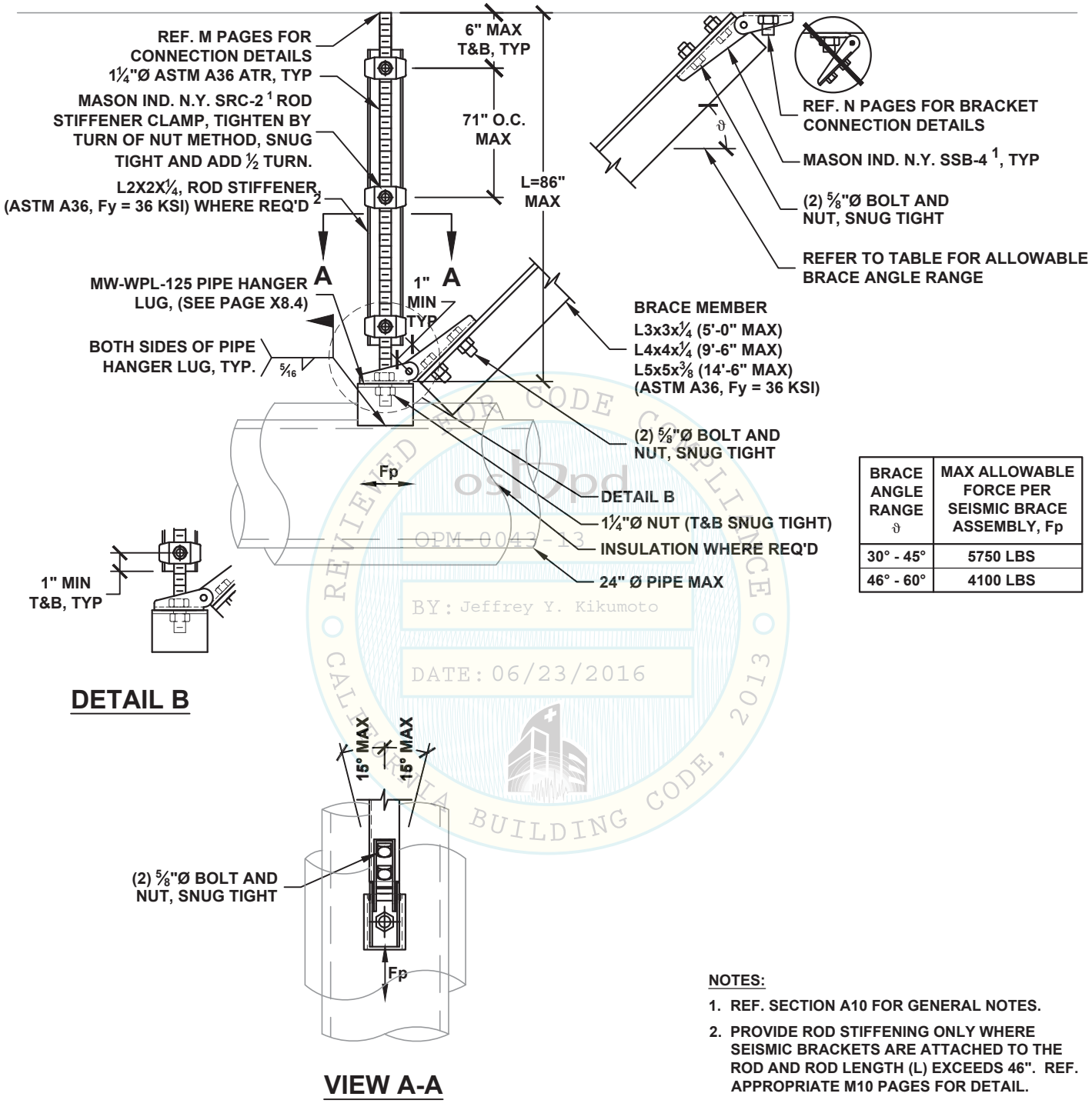

BRACE ANGLE RANGE ϑ	MAX ALLOWABLE FORCE PER SEISMIC BRACE ASSEMBLY, Fp
30° - 45°	5750 LBS
46° - 60°	4100 LBS

DETAIL B

VIEW A-A

REVIEWED FOR CODE COMPLIANCE
CALIFORNIA BUILDING CODE, 2013
oshpd
OPM-0043-13
BY: Jeffrey Y. Kikumoto
DATE: 06/23/2016

NOTES:

1. REF. SECTION A10 FOR GENERAL NOTES.
2. PROVIDE ROD STIFFENING ONLY WHERE SEISMIC BRACKETS ARE ATTACHED TO THE ROD AND ROD LENGTH (L) EXCEEDS 46". REF. APPROPRIATE M10 PAGES FOR DETAIL.

MASON WEST, INC.
1601 E. Miraloma Ave. Placentia, CA 92870
TEL (714) 630 - 0701, www.masonwest.com

Jiefu "Jeff" Zhang, SE
California SE No. S5270

PAGE
C1.74

HANGER ROD DIAMETER = 1¼"	PIPING ALL-DIRECTIONAL SEISMIC SOLID BRACING SYSTEM 24"Ø PIPE MAX	KIT OPTIONS S4A

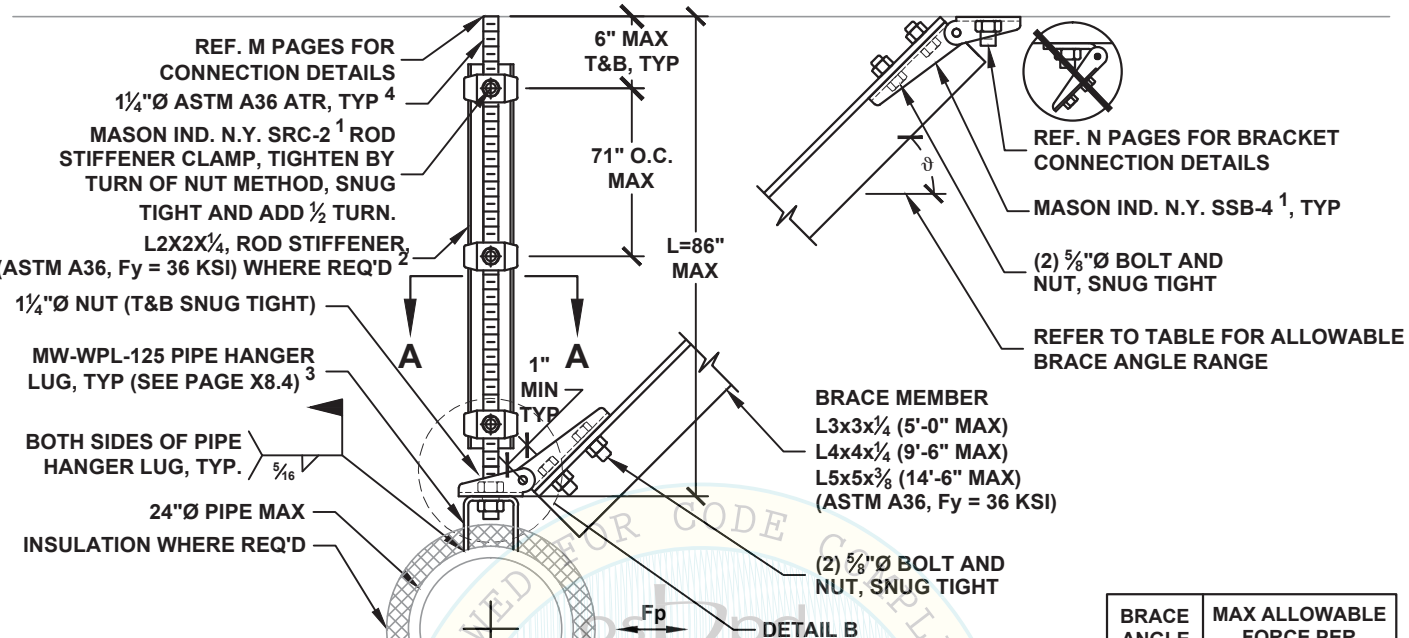

BRACE ANGLE RANGE ϑ	MAX ALLOWABLE FORCE PER SEISMIC BRACE ASSEMBLY, Fp
30° - 45°	5750 LBS
46° - 60°	3330 LBS

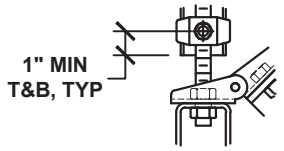

DETAIL B

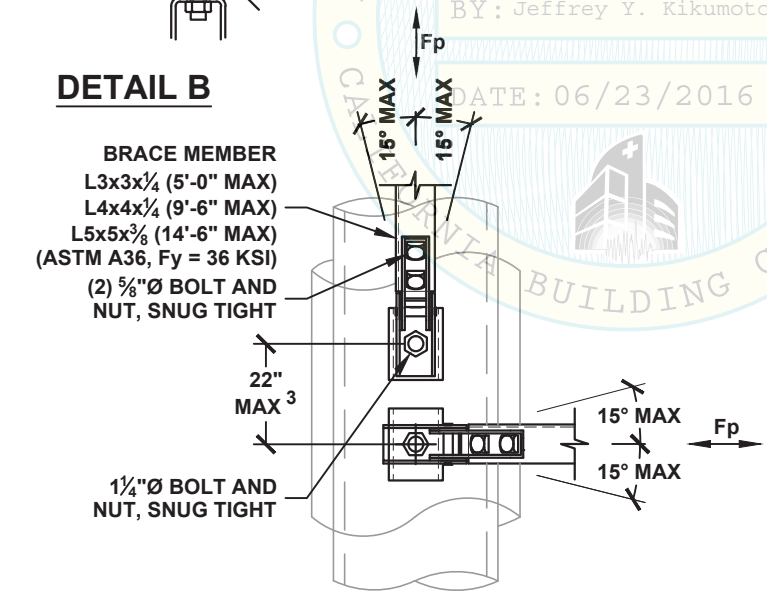

VIEW A-A

NOTES:

1. REF. SECTION A10 FOR GENERAL NOTES.
2. PROVIDE ROD STIFFENING ONLY WHERE SEISMIC BRACKETS ARE ATTACHED TO THE ROD AND ROD LENGTH (L) EXCEEDS 46". REF. APPROPRIATE M10 PAGES FOR DETAIL.
3. REF. SECTION A15 FOR ALTERNATE ARRANGEMENTS OF SEISMIC BRACES AND MAX OFFSET VALUES.
4. HANGER ROD IS REQUIRED AT ONLY ONE MW-WPL/BRACE BRACKET LOCATION.

CALIFORNIA BUILDING CODE, 2013 · REVIEWED FOR CODE COMPLIANCE · OSHPD
OPM-0043-13
BY: Jeffrey Y. Kikumoto
DATE: 06/23/2016

MASON WEST, INC.
1601 E. Miraloma Ave. Placentia, CA 92870
TEL (714) 630 - 0701, www.masonwest.com

Jiefu "Jeff" Zhang, SE
California SE No. S5270

PAGE **C1.75**

HANGER ROD DIAMETER = 3/8"	PIPING/CONDUIT TRANSVERSE SEISMIC CABLE BRACING SYSTEM 2"Ø PIPE/CONDUIT MAX	KIT OPTIONS C0T

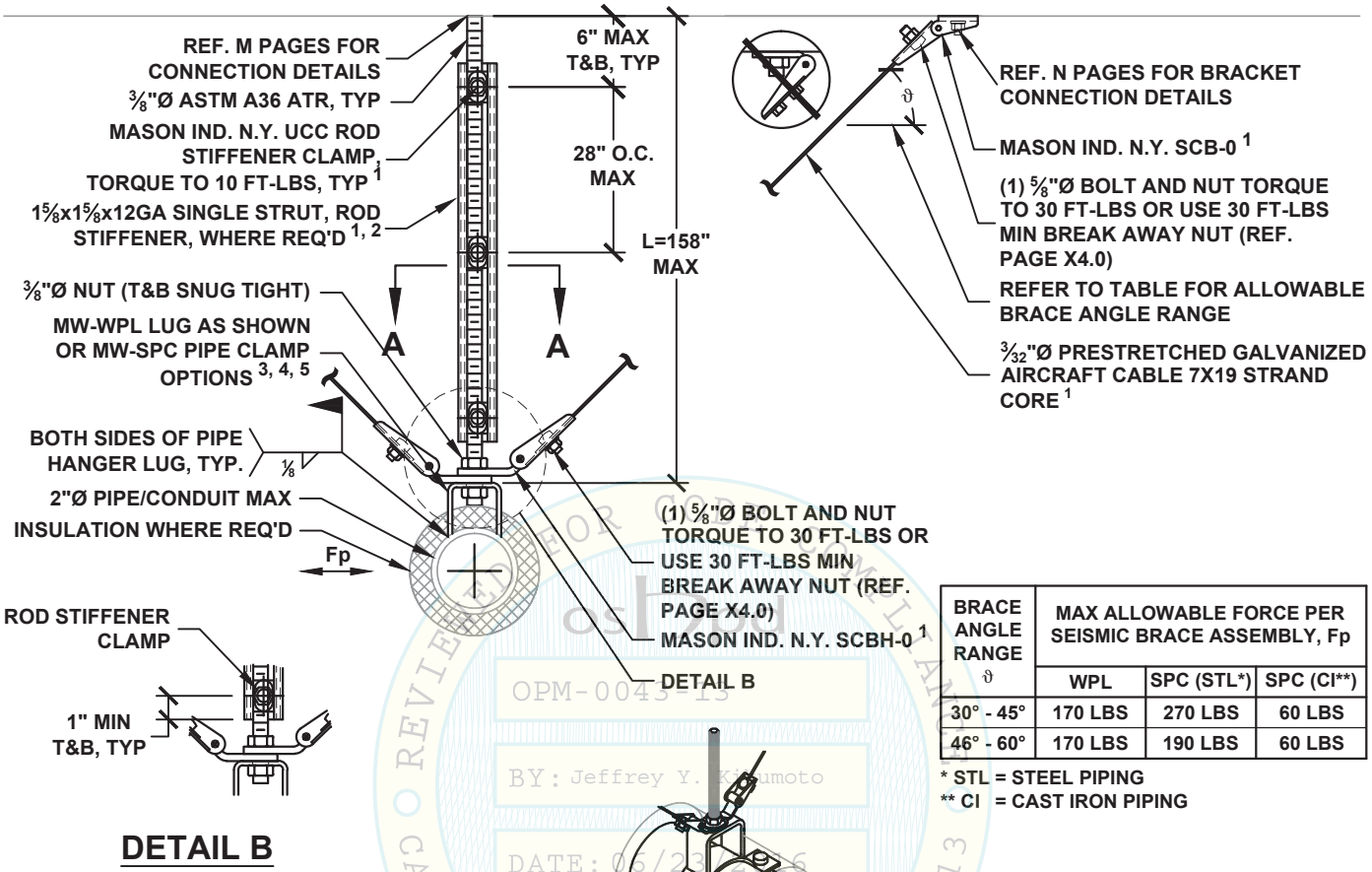

DETAIL B

BRACE ANGLE RANGE ϑ	MAX ALLOWABLE FORCE PER SEISMIC BRACE ASSEMBLY, Fp		
	WPL	SPC (STL*)	SPC (CI**)
30° - 45°	170 LBS	270 LBS	60 LBS
46° - 60°	170 LBS	190 LBS	60 LBS

* STL = STEEL PIPING
** CI = CAST IRON PIPING

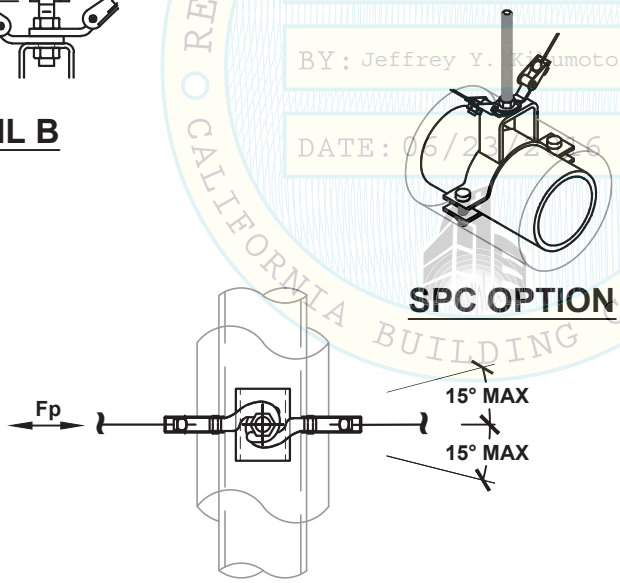

SPC OPTION

VIEW A-A

OSHPD
OPM-0043-13
BY: Jeffrey Y. Kikumoto
DATE: 06/23/2016
REVIEWED FOR CODE COMPLIANCE
CALIFORNIA BUILDING CODE, 2013

NOTES:

1. REF. SECTION A10 OR A20 FOR GENERAL NOTES.
2. PROVIDE ROD STIFFENING ONLY WHERE SEISMIC BRACKET IS ATTACHED TO THE ROD AND ROD LENGTH (L) EXCEEDS 18". REF. APPROPRIATE M10 PAGES FOR DETAIL.
3. FOR PIPE/CONDUIT SIZES UP TO 2"Ø MAX, USE RESPECTIVE MW-SPC SIZE (REF. X8.3-X8.3.1) OR USE MW-WPL-38 (REF. X8.4).
4. REF. SECTION A15 OR A25 ALTERNATE ARRANGEMENTS OF SEISMIC BRACES.
5. REF. PAGE A19.1 OR A28.1 FOR PIPE/CONDUIT CLAMP OPTION.

MASON WEST, INC.
1601 E. Miraloma Ave. Placentia, CA 92870
TEL (714) 630 - 0701, www.masonwest.com

Jiefu "Jeff" Zhang, SE
California SE No. S5270

PAGE
C2.10

HANGER ROD DIAMETER = 3/8"

PIPING/CONDUIT LONGITUDINAL SEISMIC CABLE BRACING SYSTEM 2"Ø PIPE/CONDUIT MAX

KIT OPTIONS
C0L

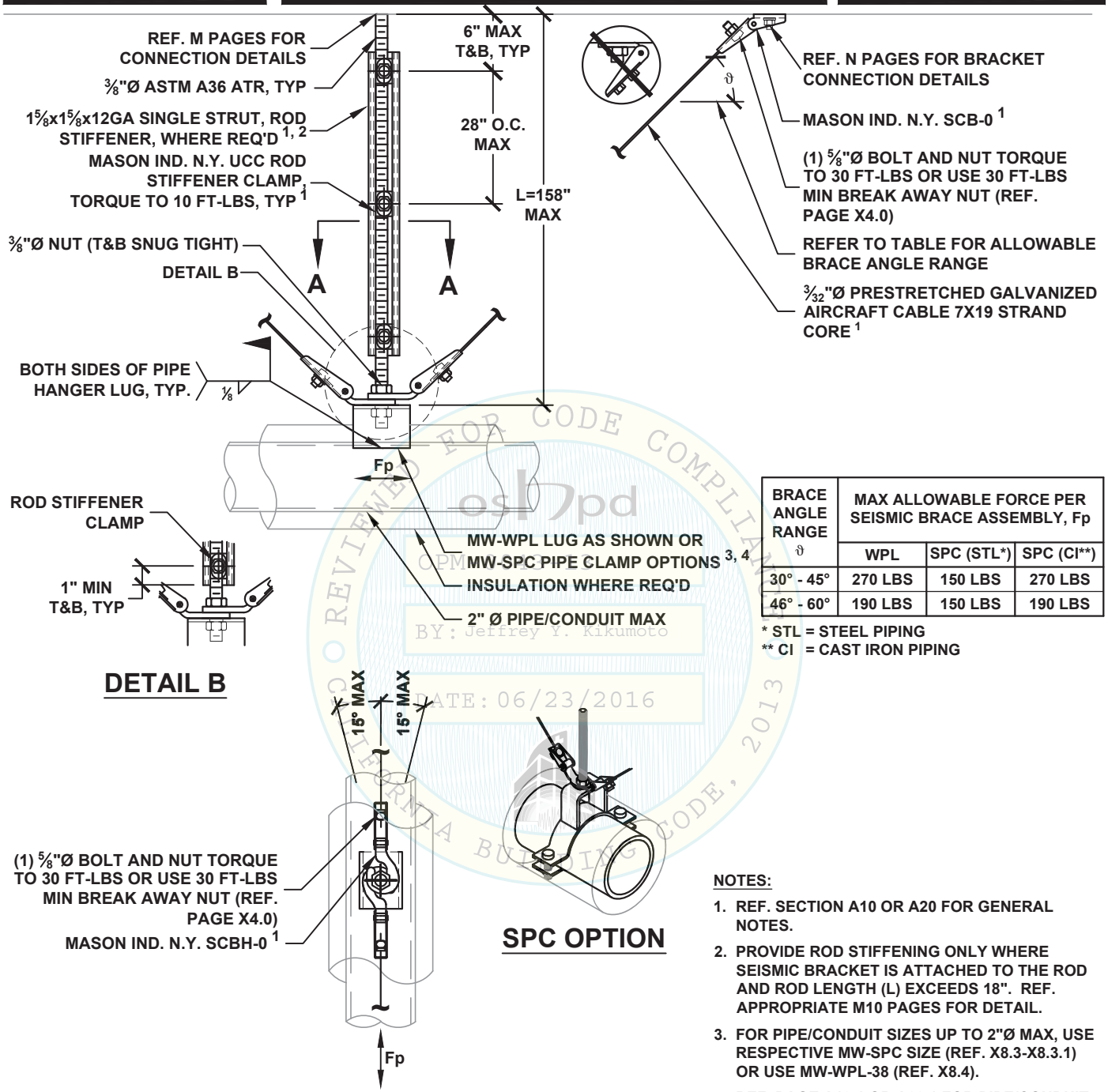

DETAIL B

BRACE ANGLE RANGE ϑ	MAX ALLOWABLE FORCE PER SEISMIC BRACE ASSEMBLY, Fp		
	WPL	SPC (STL*)	SPC (CI**)
30° - 45°	270 LBS	150 LBS	270 LBS
46° - 60°	190 LBS	150 LBS	190 LBS

* STL = STEEL PIPING
** CI = CAST IRON PIPING

VIEW A-A

SPC OPTION

NOTES:

1. REF. SECTION A10 OR A20 FOR GENERAL NOTES.
2. PROVIDE ROD STIFFENING ONLY WHERE SEISMIC BRACKET IS ATTACHED TO THE ROD AND ROD LENGTH (L) EXCEEDS 18". REF. APPROPRIATE M10 PAGES FOR DETAIL.
3. FOR PIPE/CONDUIT SIZES UP TO 2"Ø MAX, USE RESPECTIVE MW-SPC SIZE (REF. X8.3-X8.3.1) OR USE MW-WPL-38 (REF. X8.4).
4. REF. PAGE A19.1 OR A28.1 FOR PIPE/CONDUIT CLAMP OPTION.

REVIEWED FOR CODE COMPLIANCE
OPM-0043-13
BY: Jeffrey Y. Kikumoto
DATE: 06/23/2016
CALIFORNIA BUILDING CODE, 2013

MASON WEST, INC.
1601 E. Miraloma Ave. Placentia, CA 92870
TEL (714) 630 - 0701, www.masonwest.com

Jiefu "Jeff" Zhang, SE
California SE No. S5270

PAGE
C2.11

HANGER ROD DIAMETER = 3/8"	PIPING/CONDUIT ALL-DIRECTIONAL SEISMIC CABLE BRACING SYSTEM 2"Ø PIPE/CONDUIT MAX	KIT OPTIONS C0A

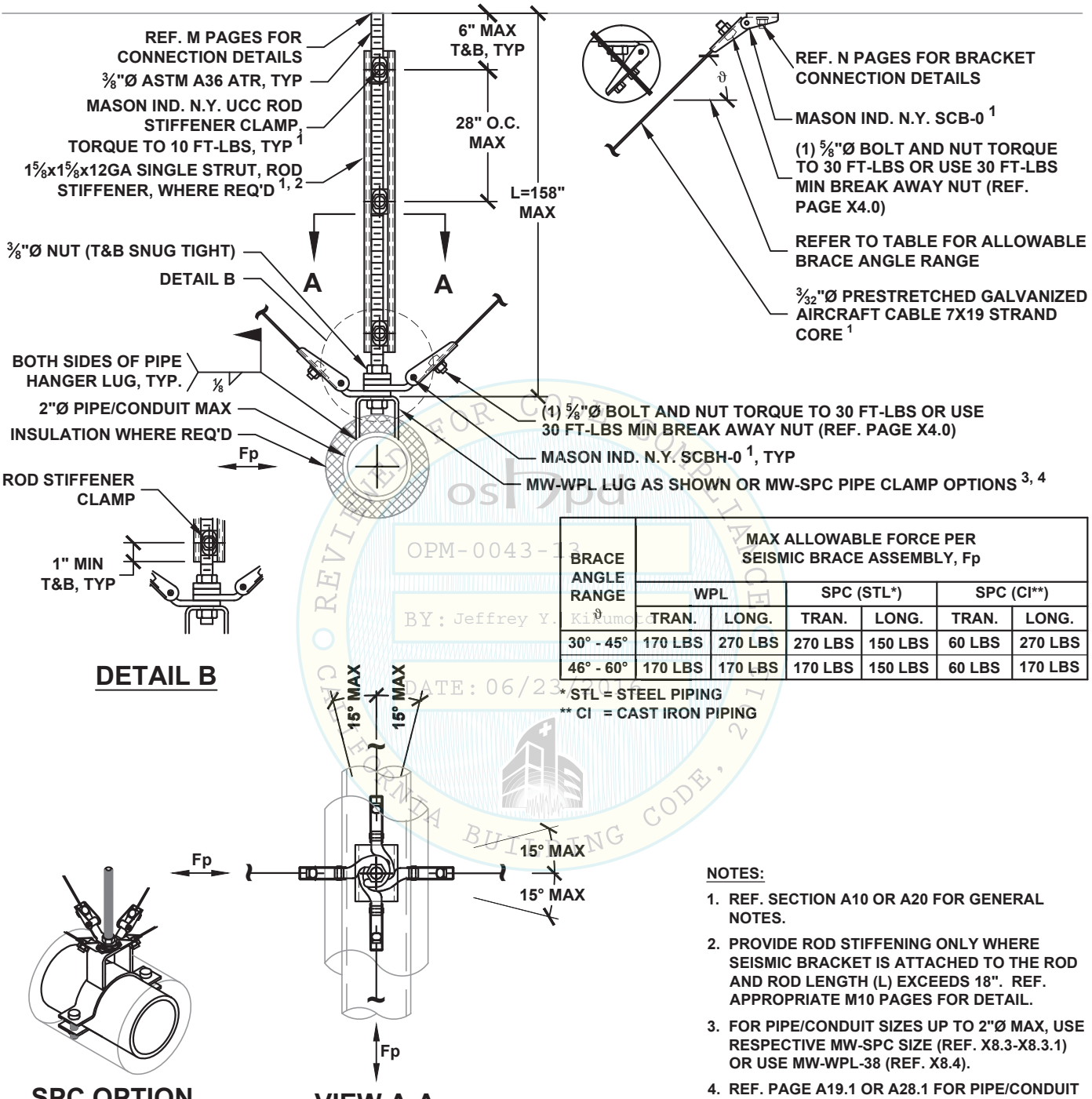

DETAIL B

SPC OPTION

VIEW A-A

BRACE ANGLE RANGE ϑ	MAX ALLOWABLE FORCE PER SEISMIC BRACE ASSEMBLY, Fp					
	WPL		SPC (STL*)		SPC (CI**)	
	TRAN.	LONG.	TRAN.	LONG.	TRAN.	LONG.
30° - 45°	170 LBS	270 LBS	270 LBS	150 LBS	60 LBS	270 LBS
46° - 60°	170 LBS	170 LBS	170 LBS	150 LBS	60 LBS	170 LBS

* STL = STEEL PIPING
** CI = CAST IRON PIPING

OPM-0043-13
BY: Jeffrey Y. Kikumoto
DATE: 06/23/2016
CALIFORNIA BUILDING CODE, 2013

NOTES:

1. REF. SECTION A10 OR A20 FOR GENERAL NOTES.
2. PROVIDE ROD STIFFENING ONLY WHERE SEISMIC BRACKET IS ATTACHED TO THE ROD AND ROD LENGTH (L) EXCEEDS 18". REF. APPROPRIATE M10 PAGES FOR DETAIL.
3. FOR PIPE/CONDUIT SIZES UP TO 2"Ø MAX, USE RESPECTIVE MW-SPC SIZE (REF. X8.3-X8.3.1) OR USE MW-WPL-38 (REF. X8.4).
4. REF. PAGE A19.1 OR A28.1 FOR PIPE/CONDUIT CLAMP OPTION.

MASON WEST, INC.
1601 E. Miraloma Ave. Placentia, CA 92870
TEL (714) 630 - 0701, www.masonwest.com

Jiefu "Jeff" Zhang, SE
California SE No. S5270

PAGE
C2.12

HANGER ROD DIAMETER = ½"	PIPING/CONDUIT TRANSVERSE SEISMIC CABLE BRACING SYSTEM 3"Ø PIPE/CONDUIT MAX	KIT OPTIONS C1T

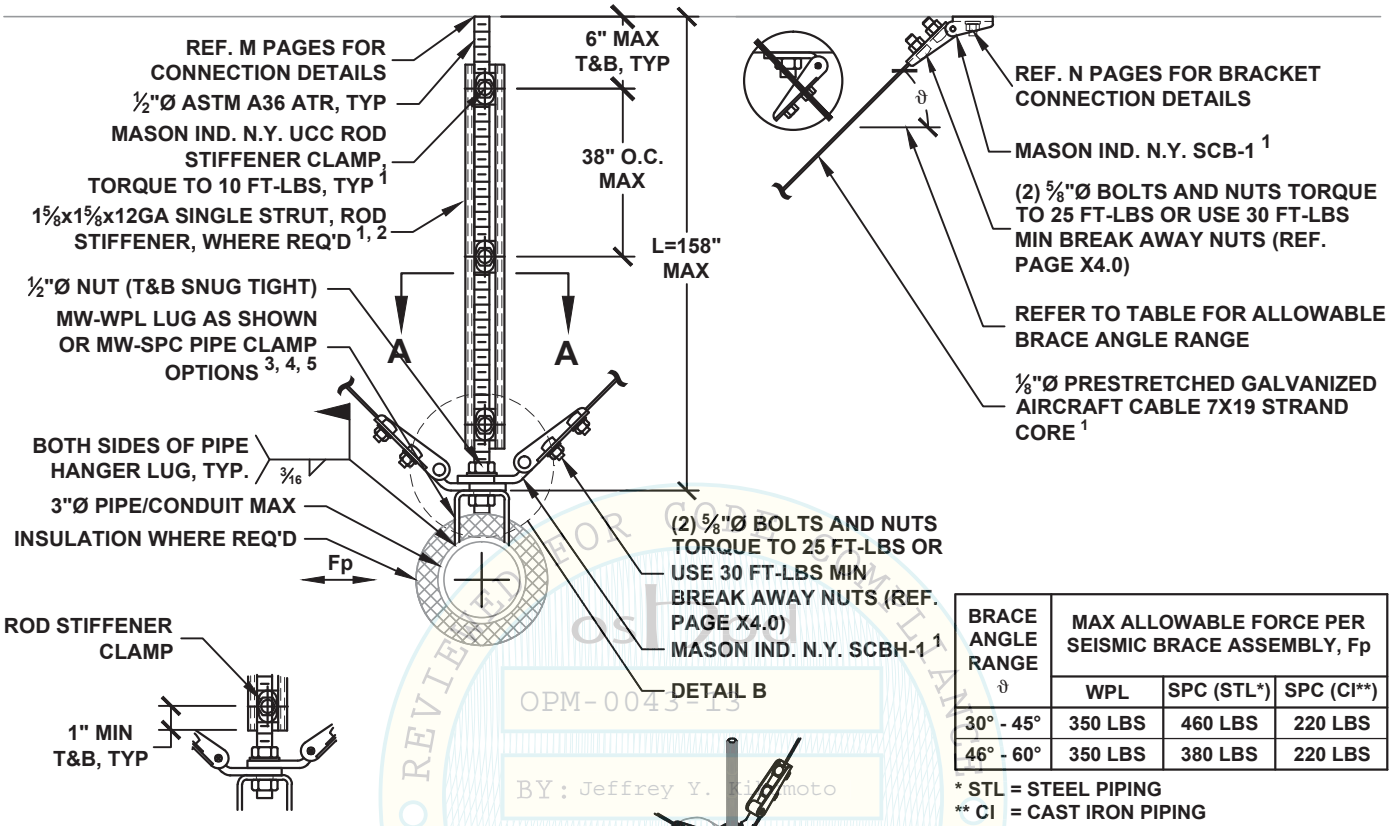

DETAIL B

BRACE ANGLE RANGE ϑ	MAX ALLOWABLE FORCE PER SEISMIC BRACE ASSEMBLY, Fp		
	WPL	SPC (STL*)	SPC (CI**)
30° - 45°	350 LBS	460 LBS	220 LBS
46° - 60°	350 LBS	380 LBS	220 LBS

* STL = STEEL PIPING
** CI = CAST IRON PIPING

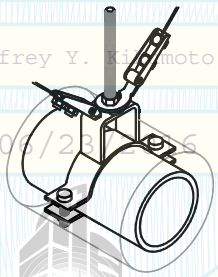

SPC OPTION

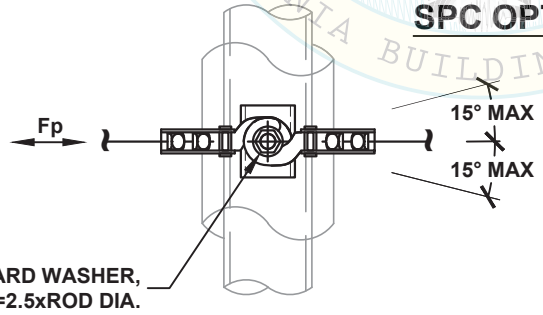

VIEW A-A

NOTES:

1. REF. SECTION A10 OR A20 FOR GENERAL NOTES.
2. PROVIDE ROD STIFFENING ONLY WHERE SEISMIC BRACKET IS ATTACHED TO THE ROD AND ROD LENGTH (L) EXCEEDS 25". REF. APPROPRIATE M10 PAGES FOR DETAIL.
3. FOR PIPE/CONDUIT SIZES UP TO 3"Ø MAX, USE RESPECTIVE MW-SPC SIZE (REF. X8.3-X8.3.1) OR USE MW-WPL-50 (REF. X8.4).
4. REF. SECTION A15 OR A25 ALTERNATE ARRANGEMENTS OF SEISMIC BRACES.
5. REF. PAGE A19.1 OR A28.1 FOR PIPE/CONDUIT CLAMP OPTION.

OSHPD REVIEWED FOR CODE COMPLIANCE CALIFORNIA BUILDING CODE, 2013
OPM-0043-13
BY: Jeffrey Y. Kikumoto
DATE: 06/23/2016

MASON WEST, INC.
1601 E. Miraloma Ave. Placentia, CA 92870
TEL (714) 630 - 0701, www.masonwest.com

Jiefu "Jeff" Zhang, SE
California SE No. S5270

PAGE
C2.20

HANGER ROD DIAMETER = ½"	PIPING/CONDUIT LONGITUDINAL SEISMIC CABLE BRACING SYSTEM 3"Ø PIPE/CONDUIT MAX	KIT OPTIONS C1L

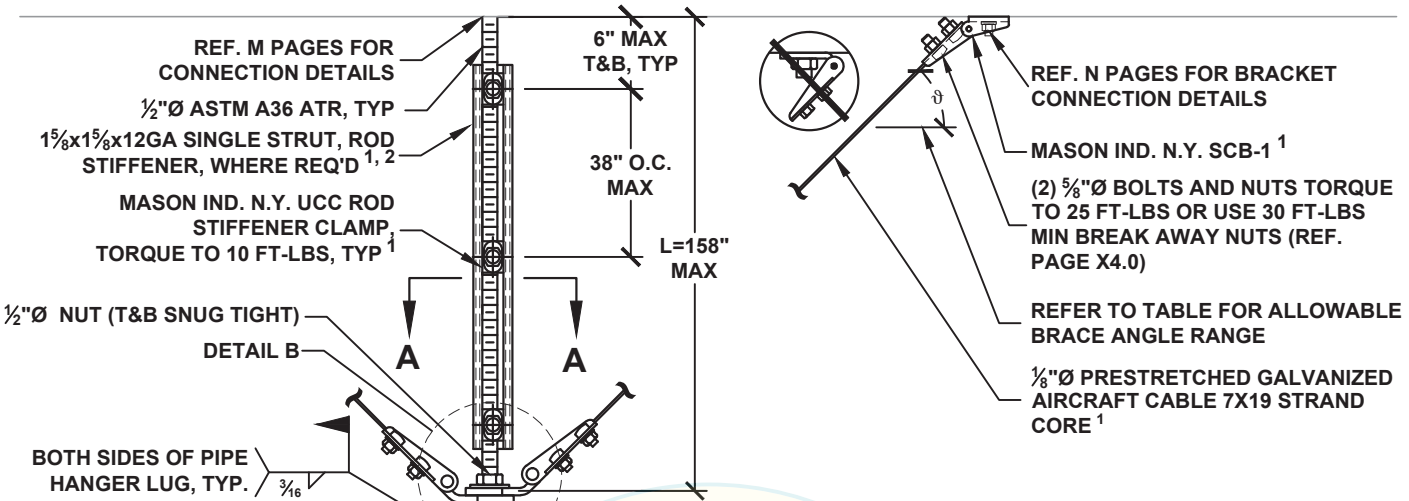

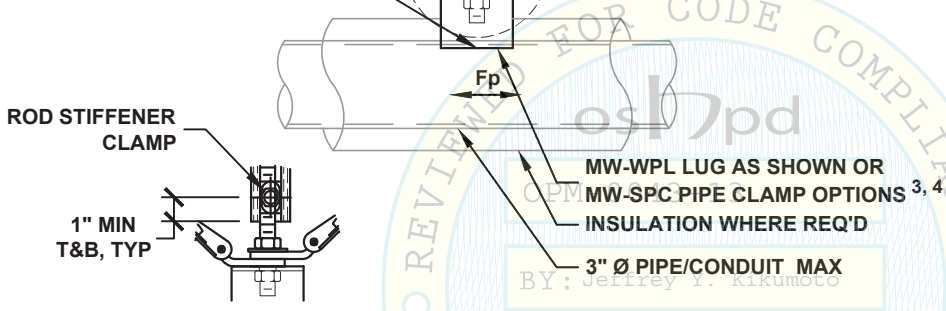

DETAIL B

BRACE ANGLE RANGE ϑ	MAX ALLOWABLE FORCE PER SEISMIC BRACE ASSEMBLY, Fp		
	WPL	SPC (STL*)	SPC (CI**)
30° - 45°	540 LBS	540 LBS	540 LBS
46° - 60°	380 LBS	380 LBS	380 LBS

* STL = STEEL PIPING
** CI = CAST IRON PIPING

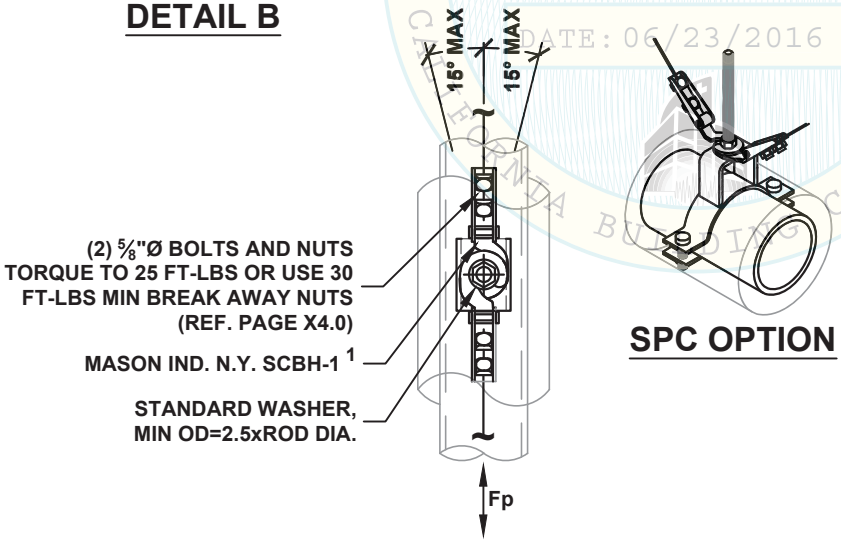

VIEW A-A

SPC OPTION

NOTES:

1. REF. SECTION A10 OR A20 FOR GENERAL NOTES.
2. PROVIDE ROD STIFFENING ONLY WHERE SEISMIC BRACKET IS ATTACHED TO THE ROD AND ROD LENGTH (L) EXCEEDS 25". REF. APPROPRIATE M10 PAGES FOR DETAIL.
3. FOR PIPE/CONDUIT SIZES UP TO 3"Ø MAX, USE RESPECTIVE MW-SPC SIZE (REF. X8.3-X8.3.1) OR USE MW-WPL-50 (REF. X8.4).
4. REF. PAGE A19.1 OR A28.1 FOR PIPE/CONDUIT CLAMP OPTION.

OSHPD REVIEWED FOR CODE COMPLIANCE OPM-0043-13 BY: Jeffrey Y. Kikumoto DATE: 06/23/2016 CALIFORNIA BUILDING CODE, 2013

MASON WEST, INC.
1601 E. Miraloma Ave. Placentia, CA 92870
TEL (714) 630 - 0701, www.masonwest.com

Jiefu "Jeff" Zhang, SE
California SE No. S5270

PAGE
C2.21

HANGER ROD DIAMETER = ½"	PIPING/CONDUIT ALL-DIRECTIONAL SEISMIC CABLE BRACING SYSTEM 3"Ø PIPE/CONDUIT MAX	KIT OPTIONS C1A

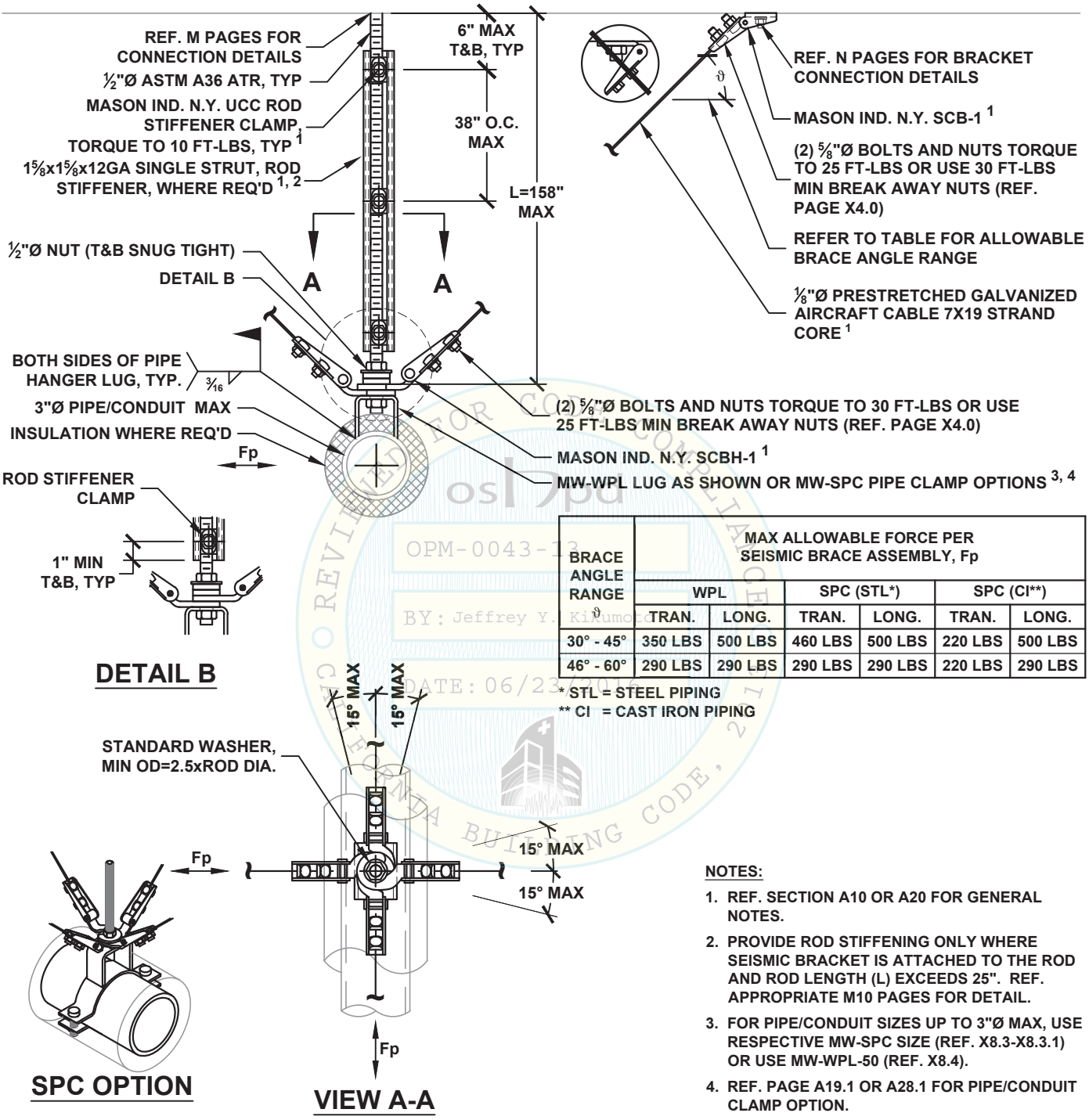

DETAIL B

SPC OPTION

VIEW A-A

BRACE ANGLE RANGE ϑ	MAX ALLOWABLE FORCE PER SEISMIC BRACE ASSEMBLY, Fp					
	WPL		SPC (STL*)		SPC (CI**)	
	TRAN.	LONG.	TRAN.	LONG.	TRAN.	LONG.
30° - 45°	350 LBS	500 LBS	460 LBS	500 LBS	220 LBS	500 LBS
46° - 60°	290 LBS	290 LBS	290 LBS	290 LBS	220 LBS	290 LBS

* STL = STEEL PIPING
** CI = CAST IRON PIPING

OPM-0043-13
BY: Jeffrey Y. Kikumoto
DATE: 06/23/2016
OSHPD
OFFICE OF STATEWIDE HEALTH PLANNING AND DEVELOPMENT
REVIEWED FOR CODE COMPLIANCE
CALIFORNIA BUILDING CODE, 2013

NOTES:

1. REF. SECTION A10 OR A20 FOR GENERAL NOTES.
2. PROVIDE ROD STIFFENING ONLY WHERE SEISMIC BRACKET IS ATTACHED TO THE ROD AND ROD LENGTH (L) EXCEEDS 25". REF. APPROPRIATE M10 PAGES FOR DETAIL.
3. FOR PIPE/CONDUIT SIZES UP TO 3"Ø MAX, USE RESPECTIVE MW-SPC SIZE (REF. X8.3-X8.3.1) OR USE MW-WPL-50 (REF. X8.4).
4. REF. PAGE A19.1 OR A28.1 FOR PIPE/CONDUIT CLAMP OPTION.

MASON WEST, INC.
1601 E. Miraloma Ave. Placentia, CA 92870
TEL (714) 630 - 0701, www.masonwest.com

Jiefu "Jeff" Zhang, SE
California SE No. S5270

PAGE
C2.22

HANGER ROD DIAMETER = 5/8"	PIPING/CONDUIT TRANSVERSE SEISMIC CABLE BRACING SYSTEM 5"Ø PIPE/CONDUIT MAX	KIT OPTIONS C1T

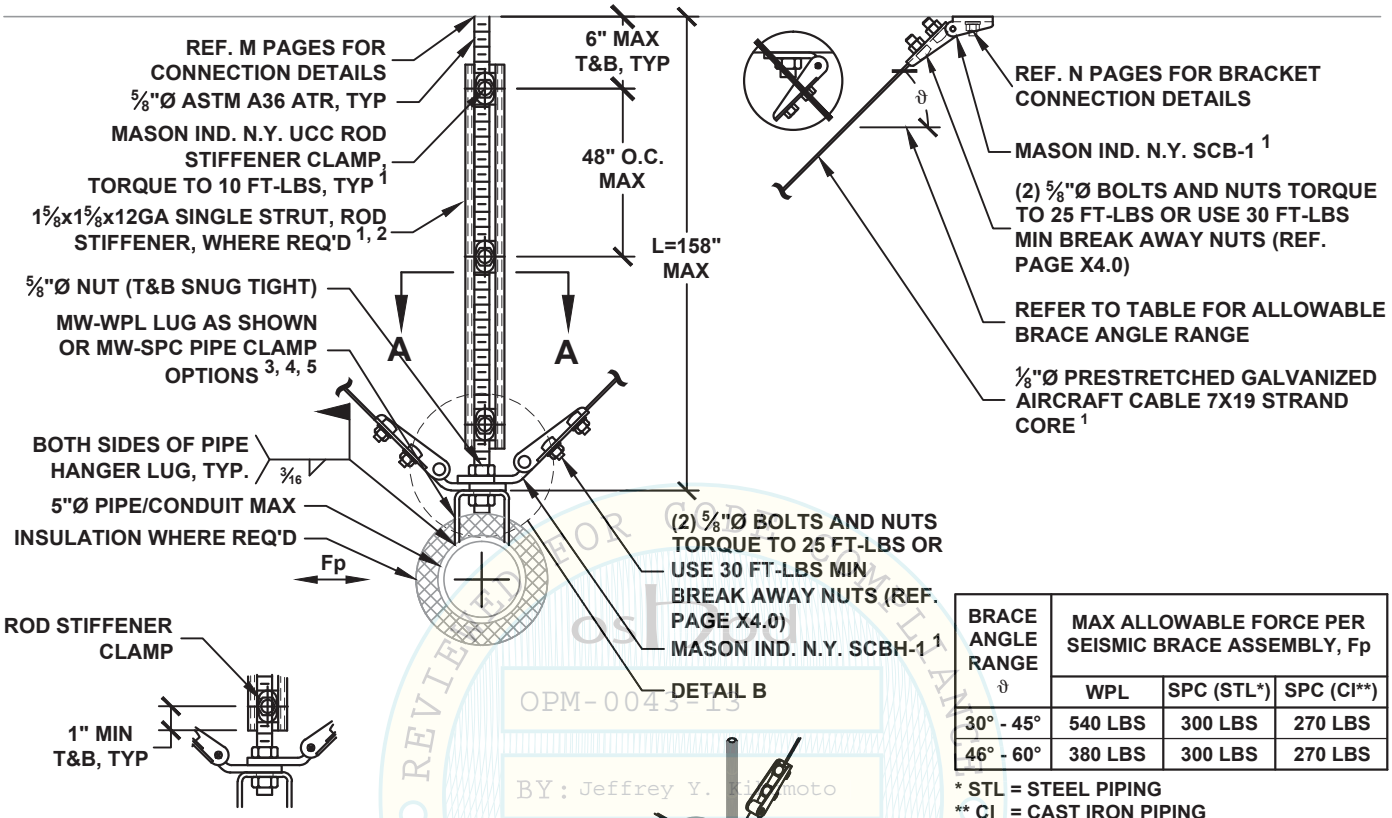

DETAIL B

BRACE ANGLE RANGE ϑ	MAX ALLOWABLE FORCE PER SEISMIC BRACE ASSEMBLY, Fp		
	WPL	SPC (STL*)	SPC (CI**)
30° - 45°	540 LBS	300 LBS	270 LBS
46° - 60°	380 LBS	300 LBS	270 LBS

* STL = STEEL PIPING
** CI = CAST IRON PIPING

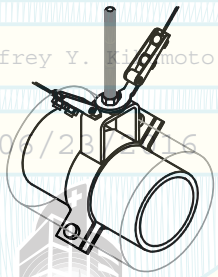

SPC OPTION

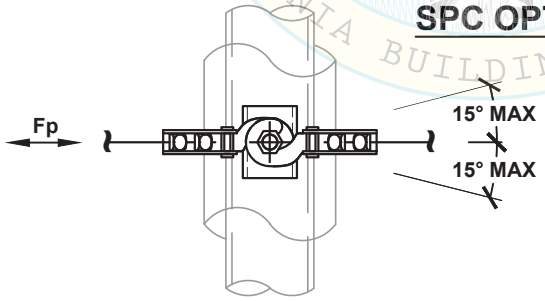

VIEW A-A

NOTES:

1. REF. SECTION A10 OR A20 FOR GENERAL NOTES.
2. PROVIDE ROD STIFFENER ONLY WHERE SEISMIC BRACKET IS ATTACHED TO THE ROD AND ROD LENGTH (L) EXCEEDS 31". REF. APPROPRIATE M10 PAGES FOR DETAILS.
3. FOR PIPE/CONDUIT SIZES UP TO 5"Ø MAX, USE RESPECTIVE MW-SPC SIZE (REF. X8.3-X8.3.1) OR USE MW-WPL-63 (REF. X8.4).
4. REF. SECTION A15 OR A25 ALTERNATE ARRANGEMENTS OF SEISMIC BRACES.
5. REF. PAGE A19.1 OR A28.1 FOR PIPE/CONDUIT CLAMP OPTION.

OSHPD REVIEWED FOR CODE COMPLIANCE CALIFORNIA BUILDING CODE, 2013
OPM-0043-13
BY: Jeffrey Y. Kikumoto
DATE: 06/23/2016

MASON WEST, INC.
1601 E. Miraloma Ave. Placentia, CA 92870
TEL (714) 630 - 0701, www.masonwest.com

Jiefu "Jeff" Zhang, SE
California SE No. S5270

PAGE
C2.30

HANGER ROD DIAMETER = 5/8"	PIPING/CONDUIT LONGITUDINAL SEISMIC CABLE BRACING SYSTEM 5"Ø PIPE/CONDUIT MAX	KIT OPTIONS C1L

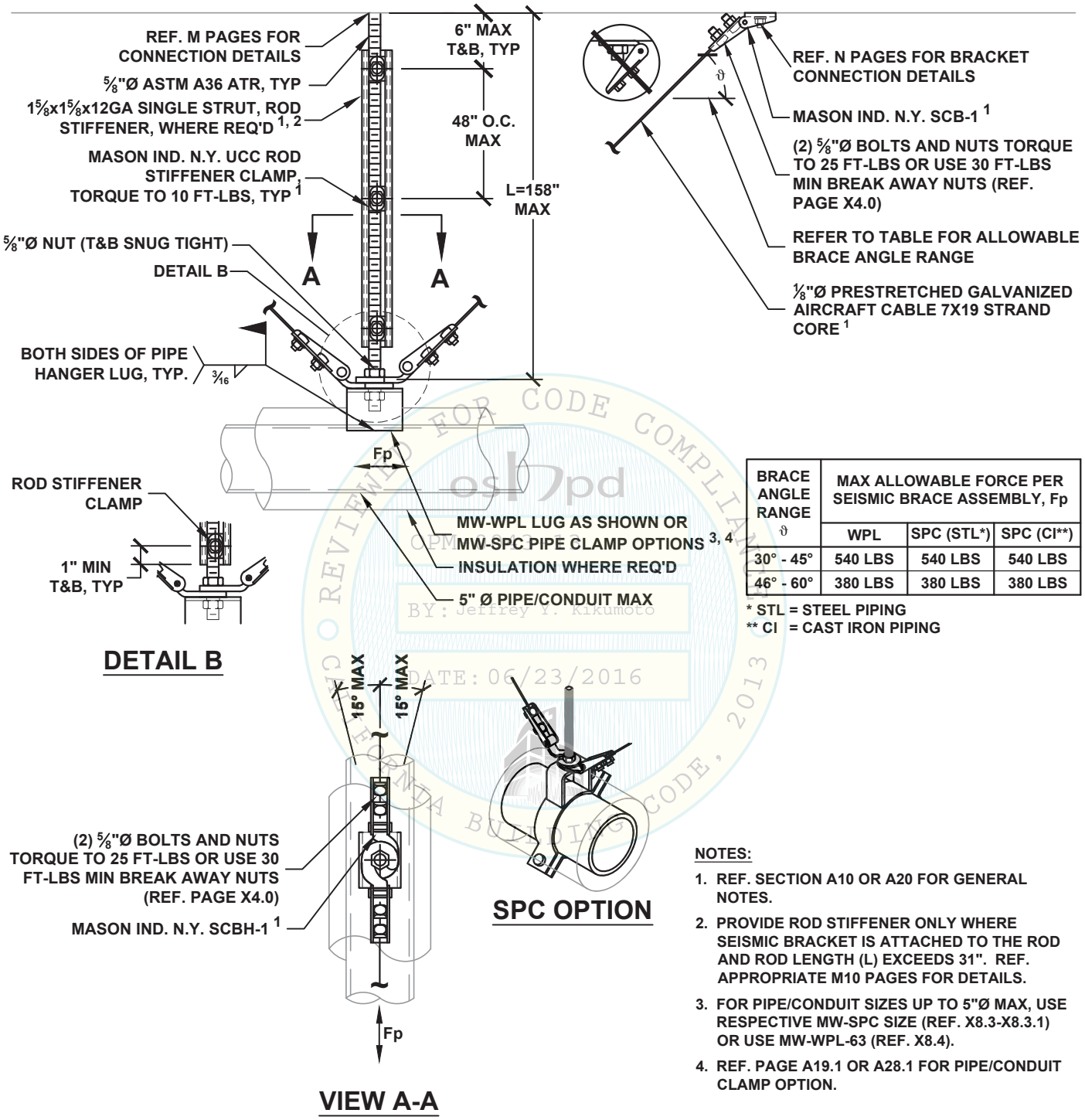

DETAIL B

BRACE ANGLE RANGE ϑ	MAX ALLOWABLE FORCE PER SEISMIC BRACE ASSEMBLY, Fp		
	WPL	SPC (STL*)	SPC (CI**)
30° - 45°	540 LBS	540 LBS	540 LBS
46° - 60°	380 LBS	380 LBS	380 LBS

* STL = STEEL PIPING
** CI = CAST IRON PIPING

VIEW A-A

SPC OPTION

NOTES:

1. REF. SECTION A10 OR A20 FOR GENERAL NOTES.
2. PROVIDE ROD STIFFENER ONLY WHERE SEISMIC BRACKET IS ATTACHED TO THE ROD AND ROD LENGTH (L) EXCEEDS 31". REF. APPROPRIATE M10 PAGES FOR DETAILS.
3. FOR PIPE/CONDUIT SIZES UP TO 5"Ø MAX, USE RESPECTIVE MW-SPC SIZE (REF. X8.3-X8.3.1) OR USE MW-WPL-63 (REF. X8.4).
4. REF. PAGE A19.1 OR A28.1 FOR PIPE/CONDUIT CLAMP OPTION.

OSHPD REVIEWED FOR CODE COMPLIANCE OPM BY: Jeffrey Y. Kikumoto DATE: 06/23/2016 CALIFORNIA BUILDING CODE, 2013

MASON WEST, INC.
1601 E. Miraloma Ave. Placentia, CA 92870
TEL (714) 630 - 0701, www.masonwest.com

Jiefu "Jeff" Zhang, SE
California SE No. S5270

PAGE
C2.31

HANGER ROD DIAMETER = 5/8"	PIPING/CONDUIT ALL-DIRECTIONAL SEISMIC CABLE BRACING SYSTEM 5"Ø PIPE/CONDUIT MAX	KIT OPTIONS C1A

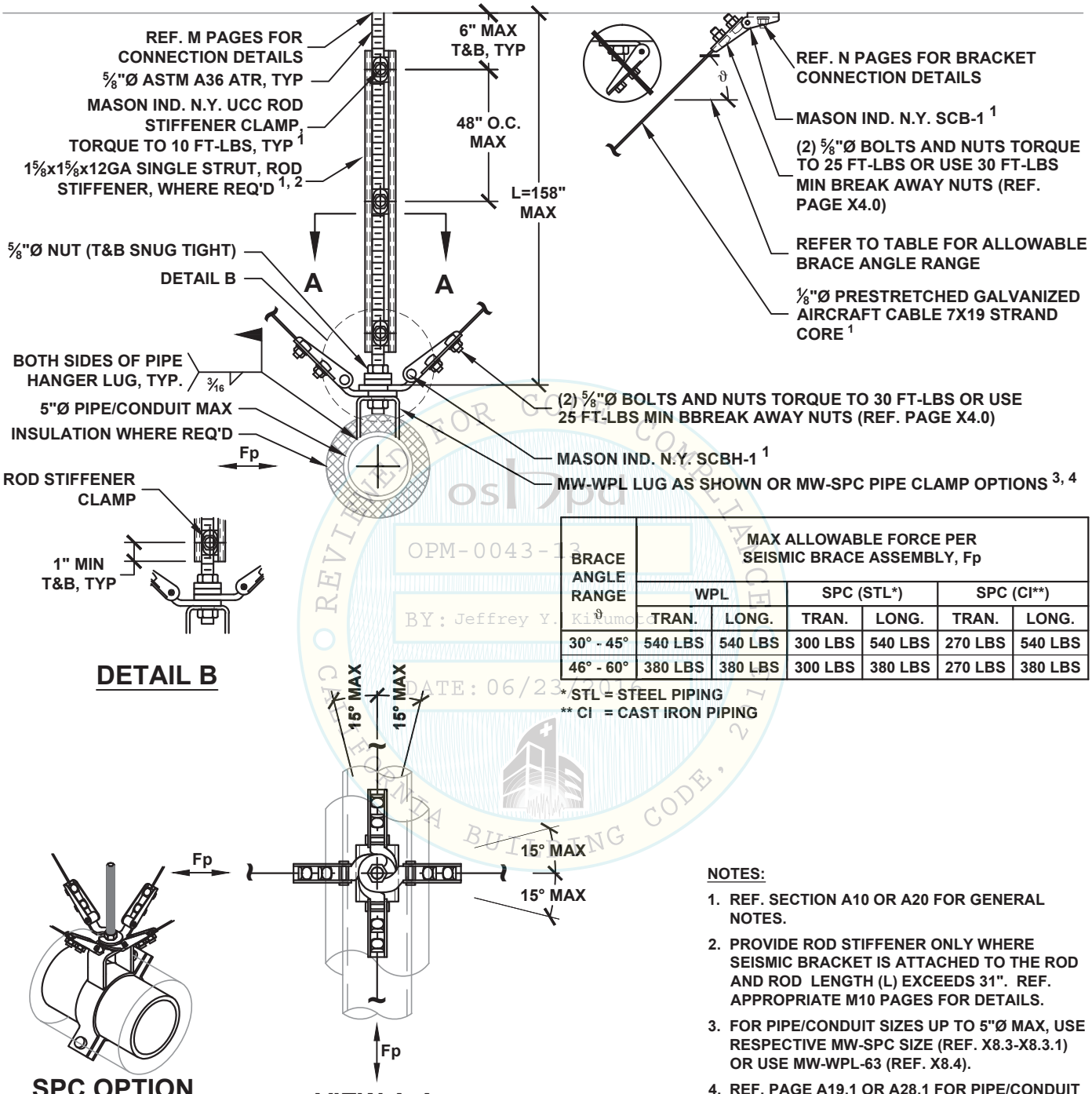

DETAIL B

SPC OPTION

VIEW A-A

BRACE ANGLE RANGE ϑ	MAX ALLOWABLE FORCE PER SEISMIC BRACE ASSEMBLY, Fp					
	WPL		SPC (STL*)		SPC (CI**)	
	TRAN.	LONG.	TRAN.	LONG.	TRAN.	LONG.
30° - 45°	540 LBS	540 LBS	300 LBS	540 LBS	270 LBS	540 LBS
46° - 60°	380 LBS	380 LBS	300 LBS	380 LBS	270 LBS	380 LBS

* STL = STEEL PIPING
** CI = CAST IRON PIPING

OPM-0043-13
BY: Jeffrey Y. Kikumoto
DATE: 06/23/2016
CODE COMPLIANCE REVIEWED FOR CALIFORNIA BUILDING CODE, 2013

NOTES:

1. REF. SECTION A10 OR A20 FOR GENERAL NOTES.
2. PROVIDE ROD STIFFENER ONLY WHERE SEISMIC BRACKET IS ATTACHED TO THE ROD AND ROD LENGTH (L) EXCEEDS 31". REF. APPROPRIATE M10 PAGES FOR DETAILS.
3. FOR PIPE/CONDUIT SIZES UP TO 5"Ø MAX, USE RESPECTIVE MW-SPC SIZE (REF. X8.3-X8.3.1) OR USE MW-WPL-63 (REF. X8.4).
4. REF. PAGE A19.1 OR A28.1 FOR PIPE/CONDUIT CLAMP OPTION.

MASON WEST, INC.
1601 E. Miraloma Ave. Placentia, CA 92870
TEL (714) 630 - 0701, www.masonwest.com

Jiefu "Jeff" Zhang, SE
California SE No. S5270

PAGE
C2.32

HANGER ROD DIAMETER = ¾"	PIPING TRANSVERSE SEISMIC CABLE BRACING SYSTEM 12"Ø PIPE MAX	KIT OPTIONS C2T

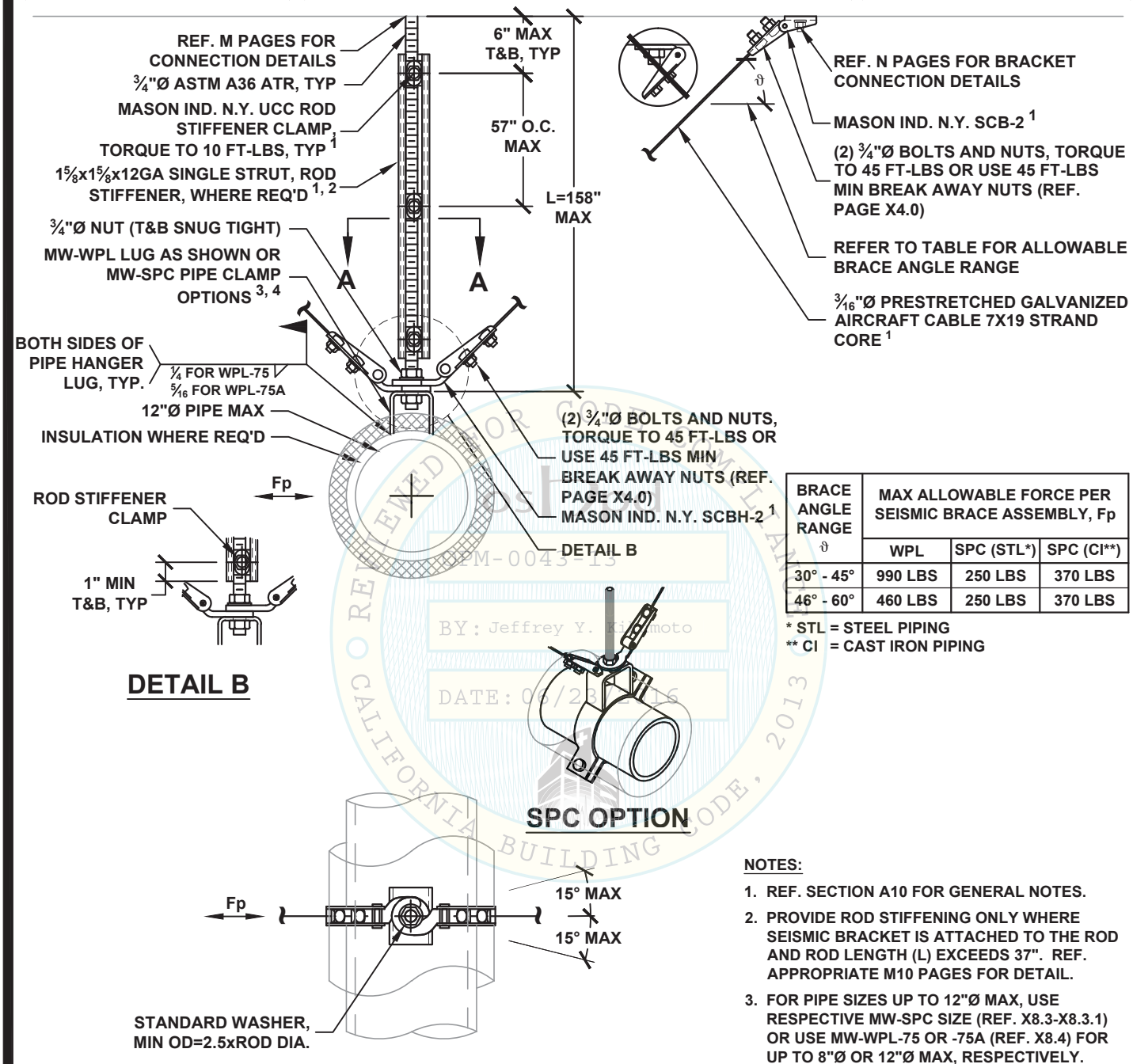

BRACE ANGLE RANGE ϑ	MAX ALLOWABLE FORCE PER SEISMIC BRACE ASSEMBLY, Fp		
	WPL	SPC (STL*)	SPC (CI**)
30° - 45°	990 LBS	250 LBS	370 LBS
46° - 60°	460 LBS	250 LBS	370 LBS

* STL = STEEL PIPING
** CI = CAST IRON PIPING

NOTES:

1. REF. SECTION A10 FOR GENERAL NOTES.
2. PROVIDE ROD STIFFENING ONLY WHERE SEISMIC BRACKET IS ATTACHED TO THE ROD AND ROD LENGTH (L) EXCEEDS 37". REF. APPROPRIATE M10 PAGES FOR DETAIL.
3. FOR PIPE SIZES UP TO 12"Ø MAX, USE RESPECTIVE MW-SPC SIZE (REF. X8.3-X8.3.1) OR USE MW-WPL-75 OR -75A (REF. X8.4) FOR UP TO 8"Ø OR 12"Ø MAX, RESPECTIVELY. MW-SPC MAY REDUCE MAX ALLOWABLE Fp.
4. REF. SECTION A15 FOR ALTERNATE ARRANGEMENTS OF SEISMIC BRACES.

REVIEWED FOR CODE COMPLIANCE
OPM-0043-13
BY: Jeffrey Y. Kikumoto
DATE: 06/23/2016
CALIFORNIA BUILDING CODE, 2013

MASON WEST, INC.
1601 E. Miraloma Ave. Placentia, CA 92870
TEL (714) 630 - 0701, www.masonwest.com

Jiefu "Jeff" Zhang, SE
California SE No. S5270

PAGE
C2.40

HANGER ROD DIAMETER = ¾"	PIPING LONGITUDINAL SEISMIC CABLE BRACING SYSTEM 12"Ø PIPE MAX	KIT OPTIONS C2L

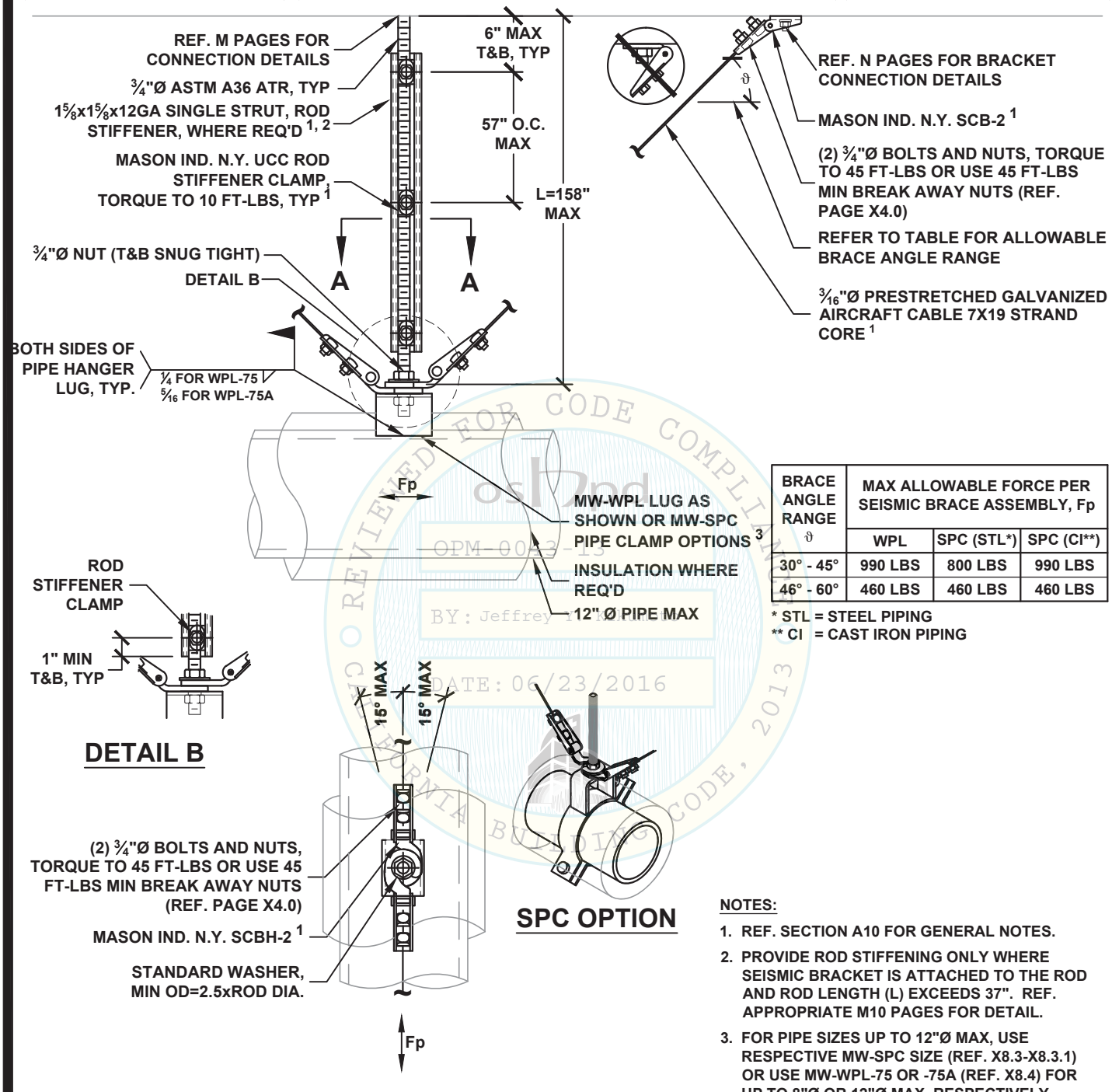

BRACE ANGLE RANGE ϑ	MAX ALLOWABLE FORCE PER SEISMIC BRACE ASSEMBLY, Fp		
	WPL	SPC (STL*)	SPC (CI**)
30° - 45°	990 LBS	800 LBS	990 LBS
46° - 60°	460 LBS	460 LBS	460 LBS

* STL = STEEL PIPING
** CI = CAST IRON PIPING

NOTES:

1. REF. SECTION A10 FOR GENERAL NOTES.
2. PROVIDE ROD STIFFENING ONLY WHERE SEISMIC BRACKET IS ATTACHED TO THE ROD AND ROD LENGTH (L) EXCEEDS 37". REF. APPROPRIATE M10 PAGES FOR DETAIL.
3. FOR PIPE SIZES UP TO 12"Ø MAX, USE RESPECTIVE MW-SPC SIZE (REF. X8.3-X8.3.1) OR USE MW-WPL-75 OR -75A (REF. X8.4) FOR UP TO 8"Ø OR 12"Ø MAX, RESPECTIVELY.

OSHPD REVIEWED FOR CODE COMPLIANCE, 2013 CALIFORNIA BUILDING CODE
OPM-0043-13
BY: Jeffrey Kikumoto
DATE: 06/23/2016

MASON WEST, INC.
1601 E. Miraloma Ave. Placentia, CA 92870
TEL (714) 630 - 0701, www.masonwest.com

Jiefu "Jeff" Zhang, SE
California SE No. S5270

PAGE
C2.41

HANGER ROD DIAMETER = ¾"	PIPING ALL-DIRECTIONAL SEISMIC CABLE BRACING SYSTEM 12"Ø PIPE MAX	KIT OPTIONS C2A

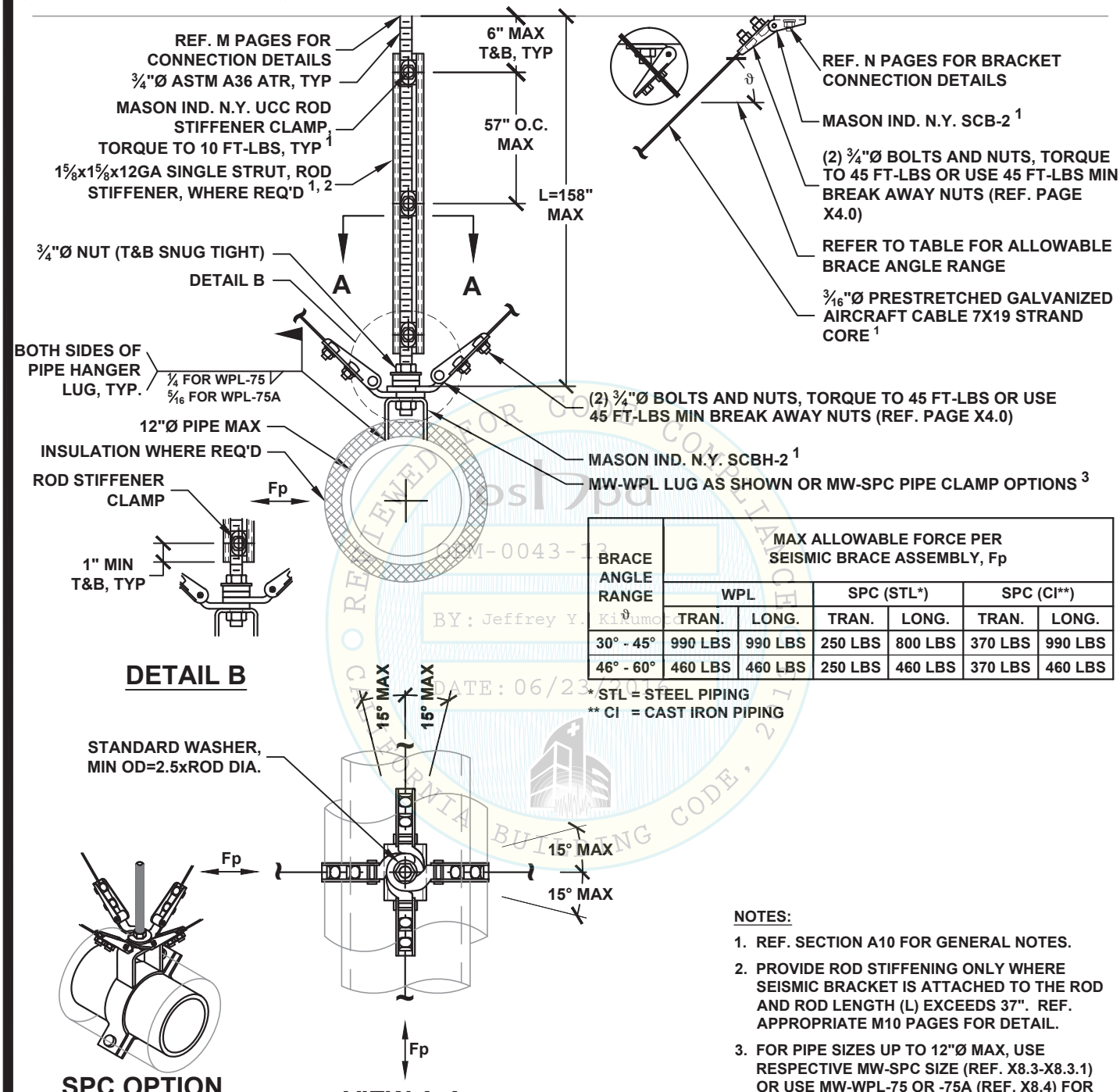

BRACE ANGLE RANGE ϑ	MAX ALLOWABLE FORCE PER SEISMIC BRACE ASSEMBLY, Fp					
	WPL		SPC (STL*)		SPC (CI**)	
	TRAN.	LONG.	TRAN.	LONG.	TRAN.	LONG.
30° - 45°	990 LBS	990 LBS	250 LBS	800 LBS	370 LBS	990 LBS
46° - 60°	460 LBS	460 LBS	250 LBS	460 LBS	370 LBS	460 LBS

* STL = STEEL PIPING
** CI = CAST IRON PIPING

REVIEWED FOR CODE COMPLIANCE
OPM-0043-13
BY: Jeffrey Y. Kikumoto
DATE: 06/23/2016
CALIFORNIA BUILDING CODE, 2013

NOTES:

1. REF. SECTION A10 FOR GENERAL NOTES.
2. PROVIDE ROD STIFFENING ONLY WHERE SEISMIC BRACKET IS ATTACHED TO THE ROD AND ROD LENGTH (L) EXCEEDS 37". REF. APPROPRIATE M10 PAGES FOR DETAIL.
3. FOR PIPE SIZES UP TO 12"Ø MAX, USE RESPECTIVE MW-SPC SIZE (REF. X8.3-X8.3.1) OR USE MW-WPL-75 OR -75A (REF. X8.4) FOR UP TO 8"Ø OR 12"Ø MAX, RESPECTIVELY.

MASON WEST, INC.
1601 E. Miraloma Ave. Placentia, CA 92870
TEL (714) 630 - 0701, www.masonwest.com

Jiefu "Jeff" Zhang, SE
California SE No. S5270

PAGE
C2.42

HANGER ROD DIAMETER = 7/8"	PIPING TRANSVERSE SEISMIC CABLE BRACING SYSTEM 12"Ø PIPE MAX	KIT OPTIONS C2T

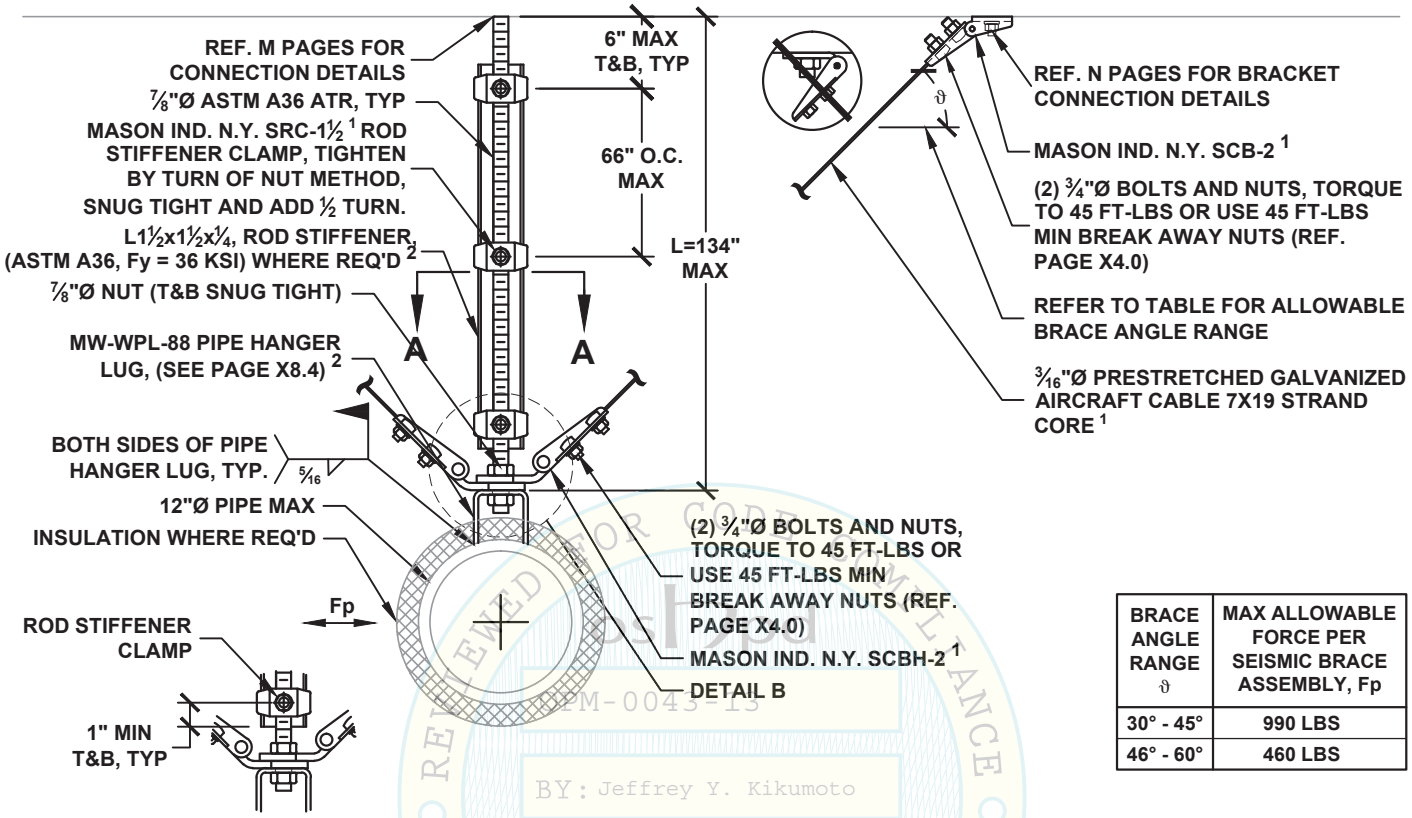

DETAIL B

BRACE ANGLE RANGE ϑ	MAX ALLOWABLE FORCE PER SEISMIC BRACE ASSEMBLY, Fp
30° - 45°	990 LBS
46° - 60°	460 LBS

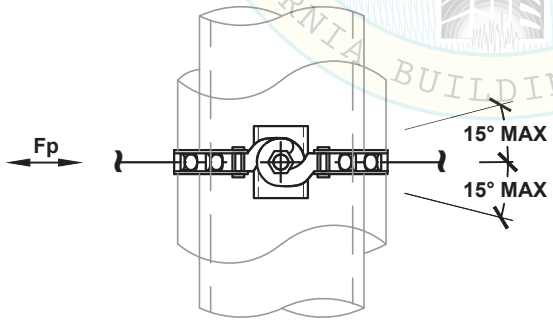

VIEW A-A

NOTES:

1. REF. SECTION A10 FOR GENERAL NOTES.
2. PROVIDE ROD STIFFENER ONLY WHERE SEISMIC BRACKET IS ATTACHED TO THE ROD AND ROD LENGTH (L) EXCEEDS 43". REF. APPROPRIATE M10 PAGES FOR DETAILS.
3. REF. SECTION A15 FOR ALTERNATE ARRANGEMENTS OF SEISMIC BRACES.

REVIEWED FOR CODE COMPLIANCE
CALIFORNIA BUILDING CODE, 2013
OPM-0043-13
BY: Jeffrey Y. Kikumoto
DATE: 06/23/2016

MASON WEST, INC.
1601 E. Miraloma Ave. Placentia, CA 92870
TEL (714) 630 - 0701, www.masonwest.com

Jiefu "Jeff" Zhang, SE
California SE No. S5270

PAGE
C2.50

HANGER ROD DIAMETER = 7/8"	PIPING LONGITUDINAL SEISMIC CABLE BRACING SYSTEM 12"Ø PIPE MAX	KIT OPTIONS C2L

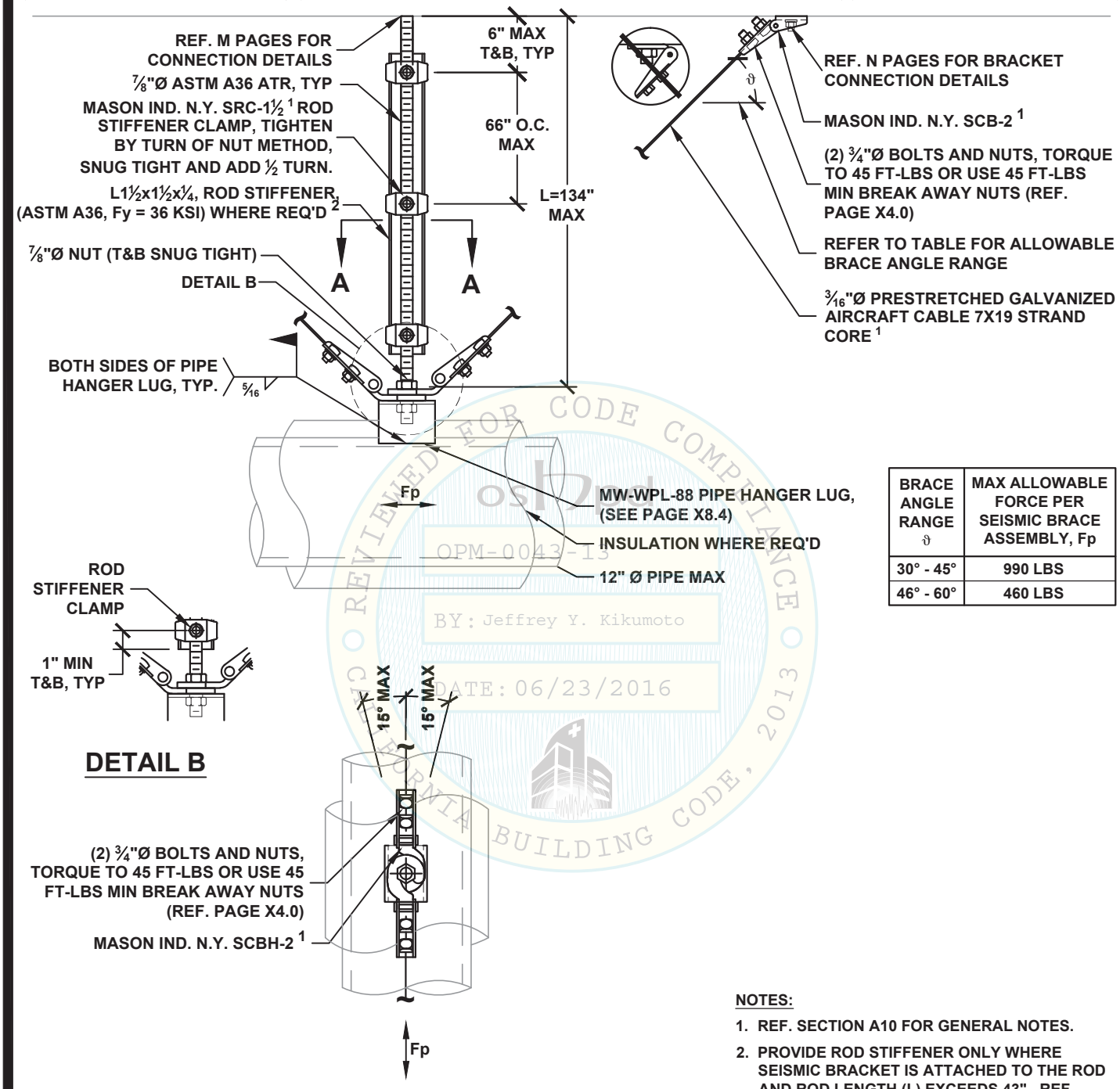

BRACE ANGLE RANGE ϑ	MAX ALLOWABLE FORCE PER SEISMIC BRACE ASSEMBLY, Fp
30° - 45°	990 LBS
46° - 60°	460 LBS

DETAIL B

VIEW A-A

REVIEWED FOR CODE COMPLIANCE
OSHPD
OPM-0043-13
BY: Jeffrey Y. Kikumoto
DATE: 06/23/2016
CALIFORNIA BUILDING CODE, 2013

NOTES:

1. REF. SECTION A10 FOR GENERAL NOTES.
2. PROVIDE ROD STIFFENER ONLY WHERE SEISMIC BRACKET IS ATTACHED TO THE ROD AND ROD LENGTH (L) EXCEEDS 43". REF. APPROPRIATE M10 PAGES FOR DETAILS..

MASON WEST, INC.
1601 E. Miraloma Ave. Placentia, CA 92870
TEL (714) 630 - 0701, www.masonwest.com

Jiefu "Jeff" Zhang, SE
California SE No. S5270

PAGE
C2.51

HANGER ROD DIAMETER = 7/8"	PIPING ALL-DIRECTIONAL SEISMIC CABLE BRACING SYSTEM 12"Ø PIPE MAX	KIT OPTIONS C2A

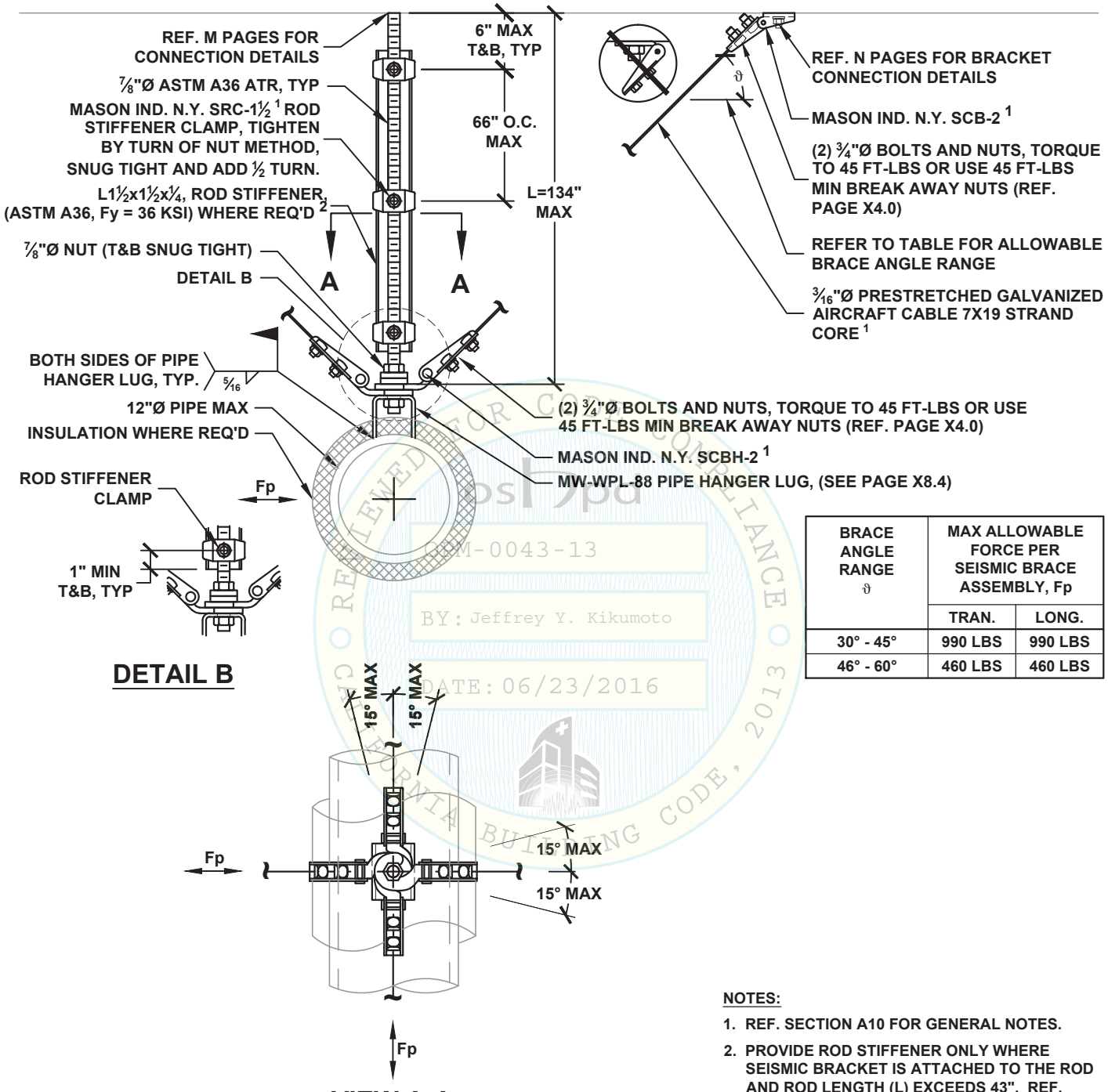

DETAIL B

VIEW A-A

BRACE ANGLE RANGE ϑ	MAX ALLOWABLE FORCE PER SEISMIC BRACE ASSEMBLY, Fp	
	TRAN.	LONG.
30° - 45°	990 LBS	990 LBS
46° - 60°	460 LBS	460 LBS

REVIEWED FOR CODE COMPLIANCE
CALIFORNIA BUILDING CODE, 2013
OSHPD
OPM-0043-13
BY: Jeffrey Y. Kikumoto
DATE: 06/23/2016

NOTES:

1. REF. SECTION A10 FOR GENERAL NOTES.
2. PROVIDE ROD STIFFENER ONLY WHERE SEISMIC BRACKET IS ATTACHED TO THE ROD AND ROD LENGTH (L) EXCEEDS 43". REF. APPROPRIATE M10 PAGES FOR DETAILS.

MASON WEST, INC.
1601 E. Miraloma Ave. Placentia, CA 92870
TEL (714) 630 - 0701, www.masonwest.com

Jiefu "Jeff" Zhang, SE
California SE No. S5270

PAGE
C2.52

HANGER ROD DIAMETER = ⅜"	PIPING/CONDUIT TRANSVERSE SEISMIC SOLID BRACING SYSTEM 2"Ø PIPE/CONDUIT MAX	KIT OPTIONS W38T

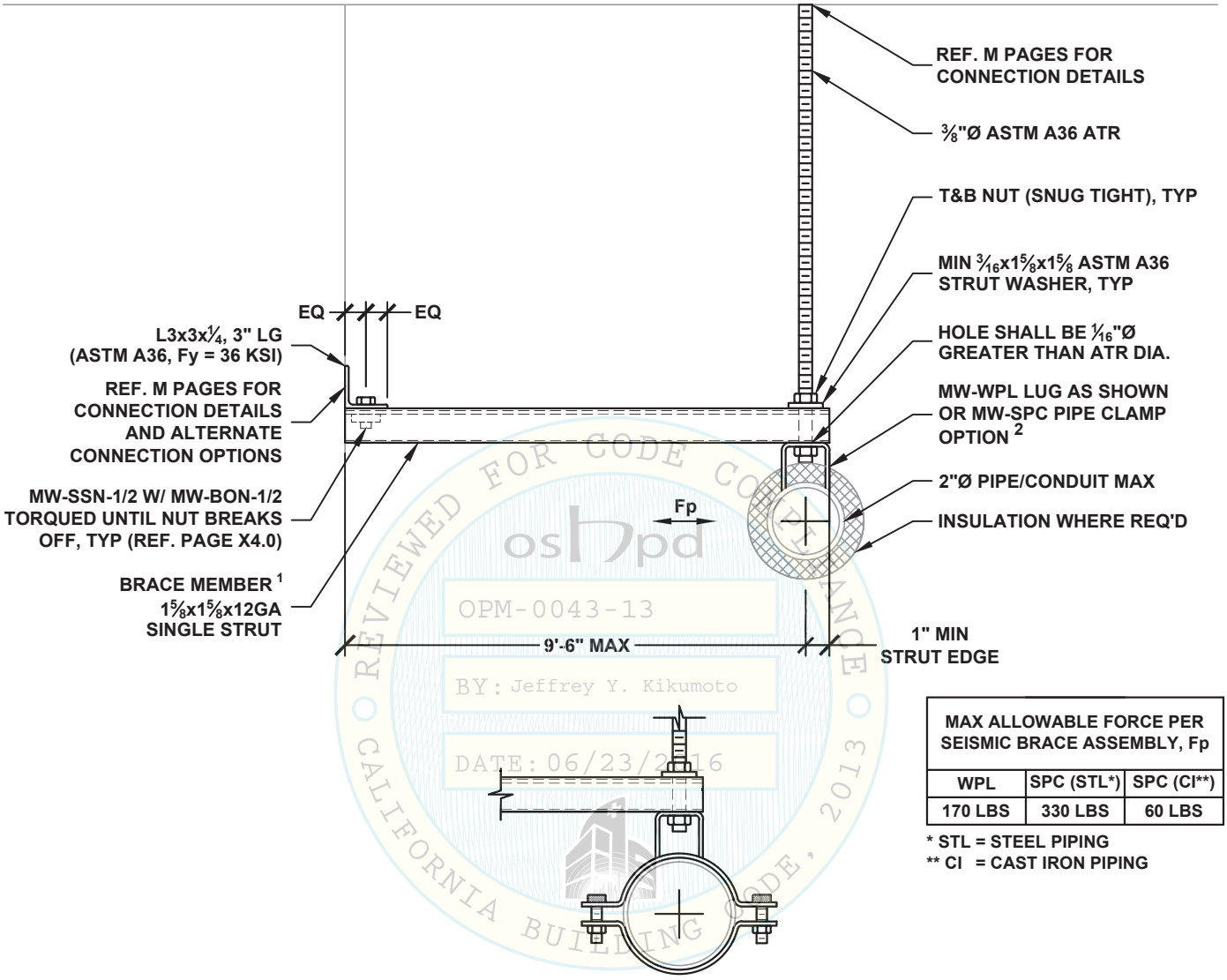

REVIEWED FOR CODE COMPLIANCE
CALIFORNIA BUILDING CODE, 2013
OPM-0043-13
BY: Jeffrey Y. Kikumoto
DATE: 06/23/2016

MAX ALLOWABLE FORCE PER SEISMIC BRACE ASSEMBLY, Fp		
WPL	SPC (STL*)	SPC (CI**)
170 LBS	330 LBS	60 LBS

* STL = STEEL PIPING
** CI = CAST IRON PIPING

SPC OPTION

NOTES:

1. BRACE MEMBER MAY BE PROVIDED WITH ROUND HOLES SIZED FOR HANGER RODS. REF. X7.0 & X7.1 FOR STRUT MEMBER DATA.
2. FOR PIPE/CONDUIT SIZES UP TO 2"Ø MAX, USE RESPECTIVE MW-SPC SIZE (REF. X8.3-X8.3.1) OR USE MW-WPL-38 (REF. X8.4).

MASON WEST, INC.
1601 E. Miraloma Ave. Placentia, CA 92870
TEL (714) 630 - 0701, www.masonwest.com

Jiefu "Jeff" Zhang, SE
California SE No. S5270

PAGE
C3.10

HANGER ROD DIAMETER = ½"	PIPING/CONDUIT TRANSVERSE SEISMIC SOLID BRACING SYSTEM 3"Ø PIPE/CONDUIT MAX	KIT OPTIONS W50T

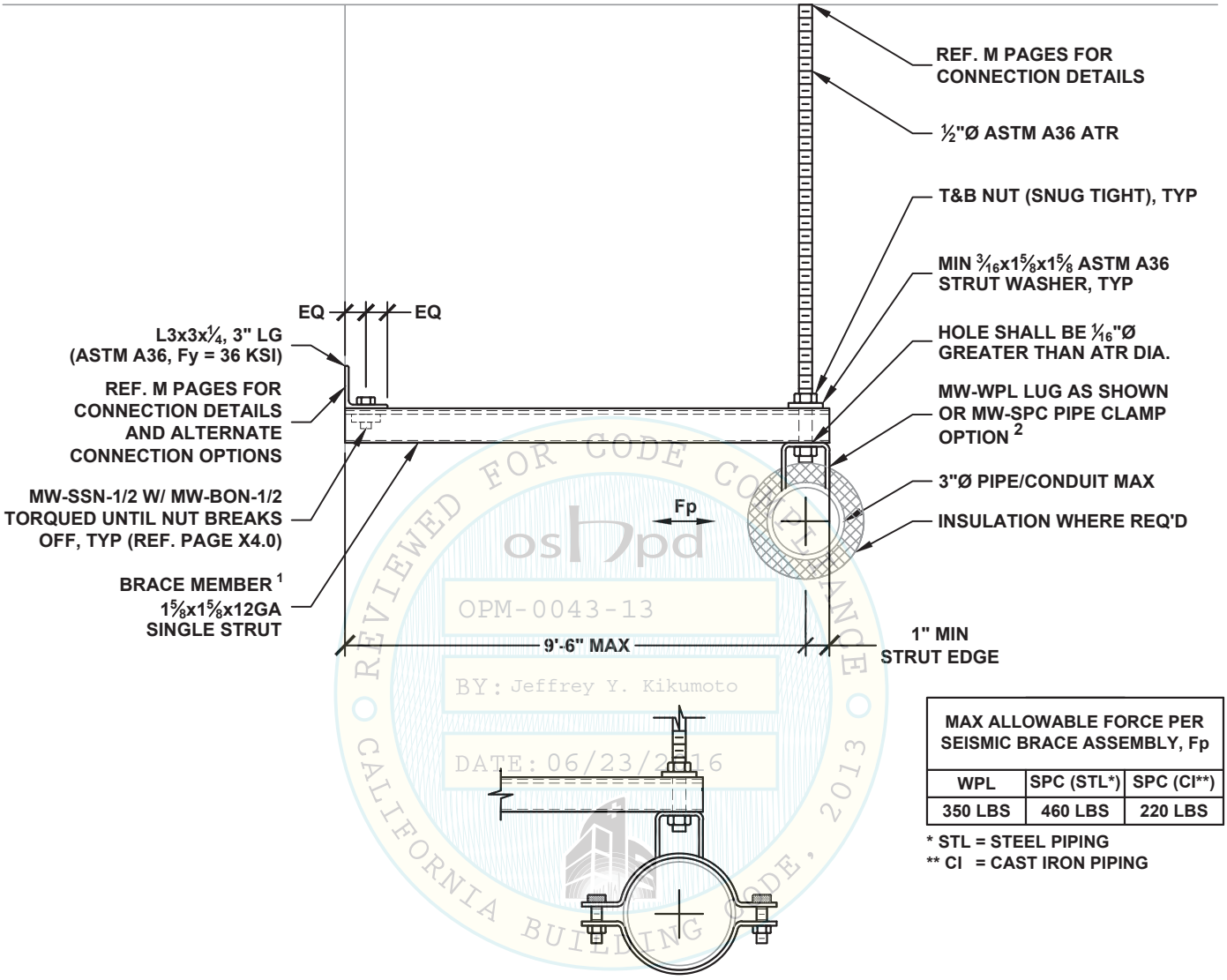

MAX ALLOWABLE FORCE PER SEISMIC BRACE ASSEMBLY, Fp		
WPL	SPC (STL*)	SPC (CI**)
350 LBS	460 LBS	220 LBS

* STL = STEEL PIPING
** CI = CAST IRON PIPING

REVIEWED FOR CODE COMPLIANCE
OSHPD
OPM-0043-13
BY: Jeffrey Y. Kikumoto
DATE: 06/23/2016
CALIFORNIA BUILDING CODE, 2013

SPC OPTION

NOTES:

1. BRACE MEMBER MAY BE PROVIDED WITH ROUND HOLES SIZED FOR HANGER RODS. REF. X7.0 & X7.1 FOR STRUT MEMBER DATA.
2. FOR PIPE/CONDUIT SIZES UP TO 3"Ø MAX, USE RESPECTIVE MW-SPC SIZE (REF. X8.3-X8.3.1) OR USE MW-WPL-50 (REF. X8.4).

MASON WEST, INC.
1601 E. Miraloma Ave. Placentia, CA 92870
TEL (714) 630 - 0701, www.masonwest.com

Jiefu "Jeff" Zhang, SE
California SE No. S5270

PAGE
C3.20

HANGER ROD DIAMETER = 5/8"	PIPING/CONDUIT TRANSVERSE SEISMIC SOLID BRACING SYSTEM 5"Ø PIPE/CONDUIT MAX	KIT OPTIONS W63T

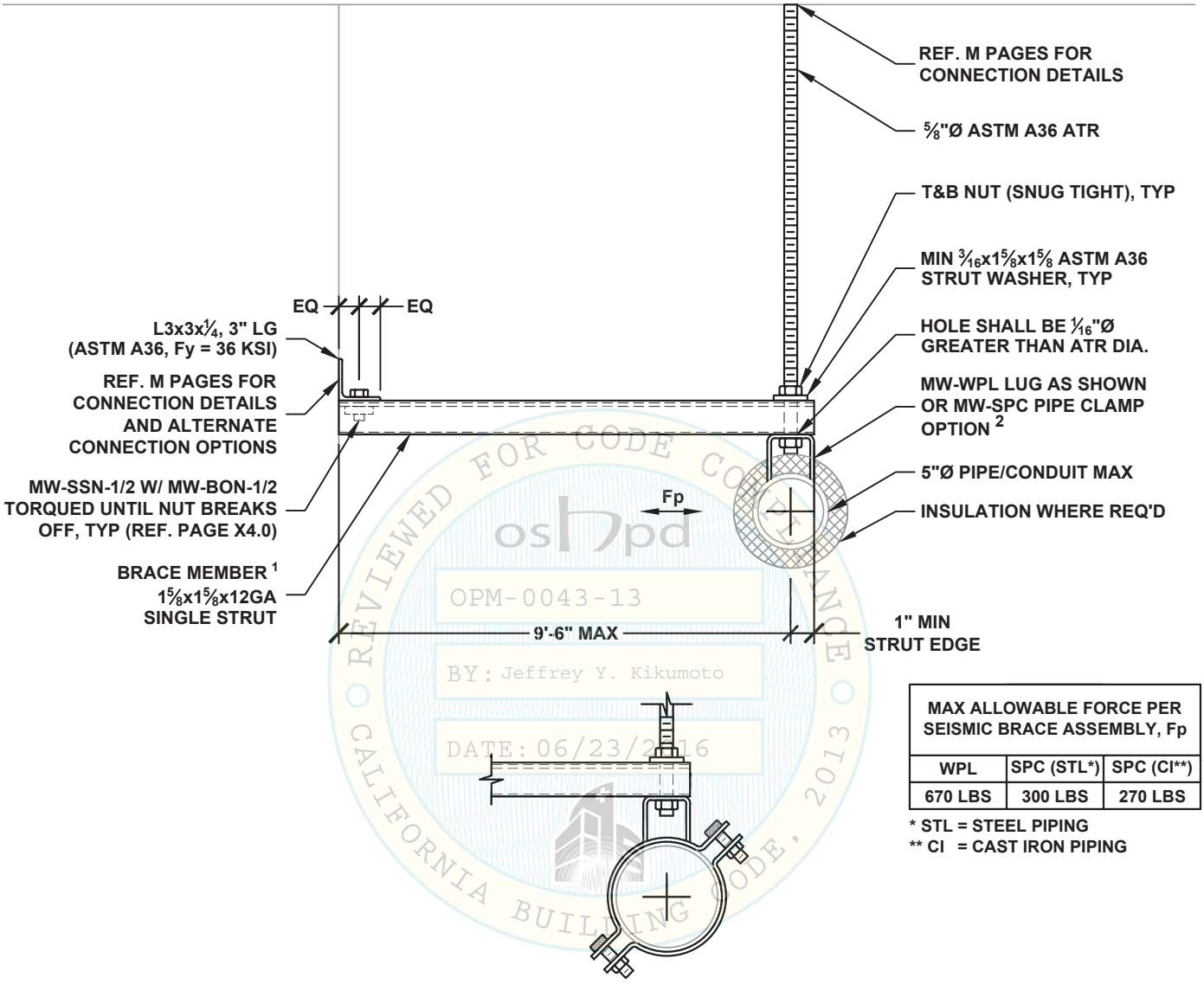

REVIEWED FOR CODE COMPLIANCE
CALIFORNIA BUILDING CODE, 2013
OPM-0043-13
BY: Jeffrey Y. Kikumoto
DATE: 06/23/2016

MAX ALLOWABLE FORCE PER SEISMIC BRACE ASSEMBLY, Fp		
WPL	SPC (STL*)	SPC (CI**)
670 LBS	300 LBS	270 LBS

* STL = STEEL PIPING
** CI = CAST IRON PIPING

SPC OPTION

NOTES:

1. BRACE MEMBER MAY BE PROVIDED WITH ROUND HOLES SIZED FOR HANGER RODS. REF. X7.0 & X7.1 FOR STRUT MEMBER DATA.
2. FOR PIPE/CONDUIT SIZES UP TO 5"Ø MAX, USE RESPECTIVE MW-SPC SIZE (REF. X8.3-X8.3.1) OR USE MW-WPL-63 (REF. X8.4).

MASON WEST, INC.
1601 E. Miraloma Ave. Placentia, CA 92870
TEL (714) 630 - 0701, www.masonwest.com

Jiefu "Jeff" Zhang, SE
California SE No. S5270

PAGE
C3.30

HANGER ROD DIAMETER = 3/8"

RECTANGULAR DUCT TRANSVERSE SEISMIC SOLID BRACING SYSTEM 30 PLF MAX

KIT OPTIONS
TS12T
TS1220T
TSH312T
TSH320T

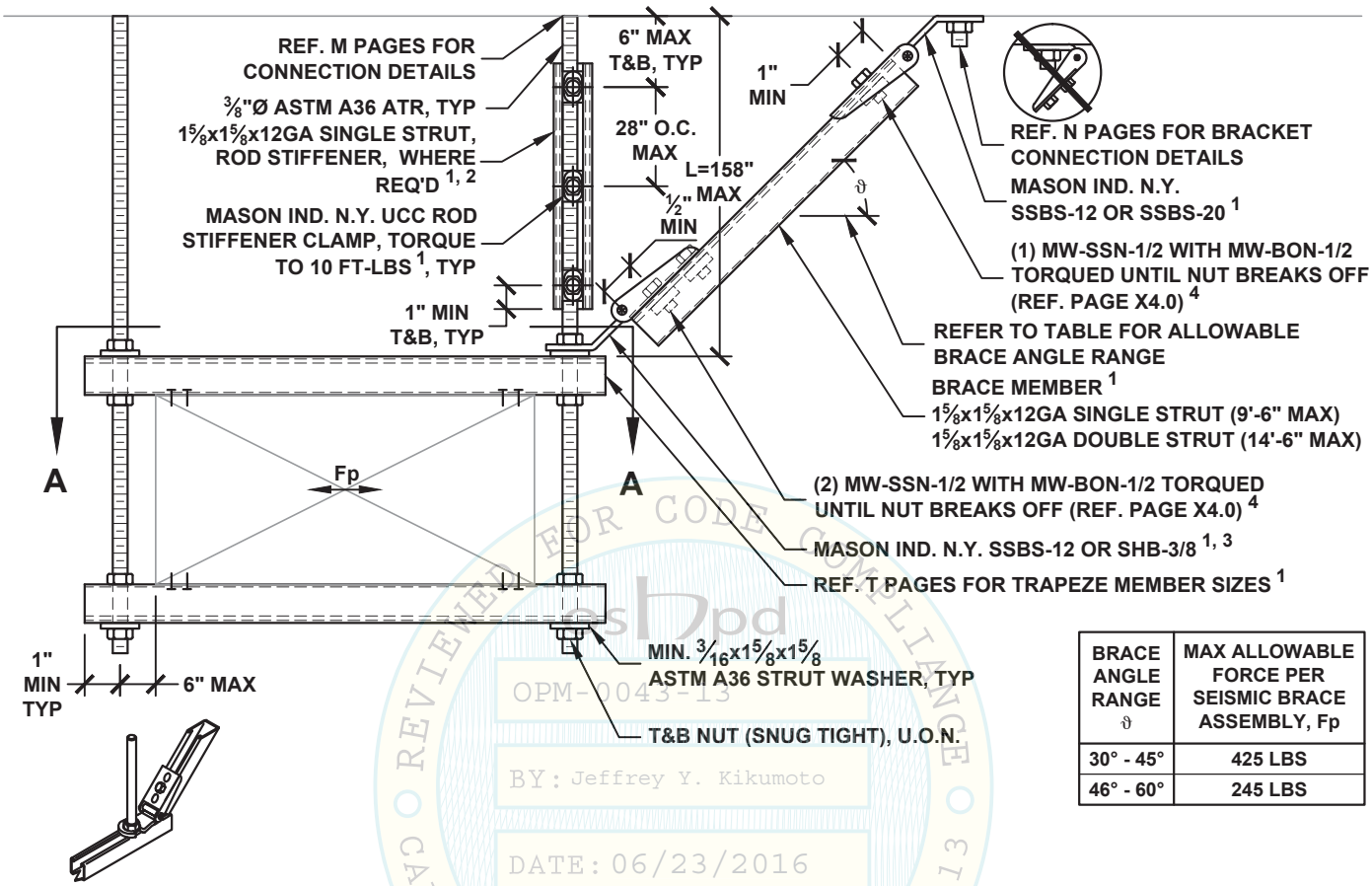

BRACE ANGLE RANGE ϑ	MAX ALLOWABLE FORCE PER SEISMIC BRACE ASSEMBLY, Fp
30° - 45°	425 LBS
46° - 60°	245 LBS

SHB OPTION

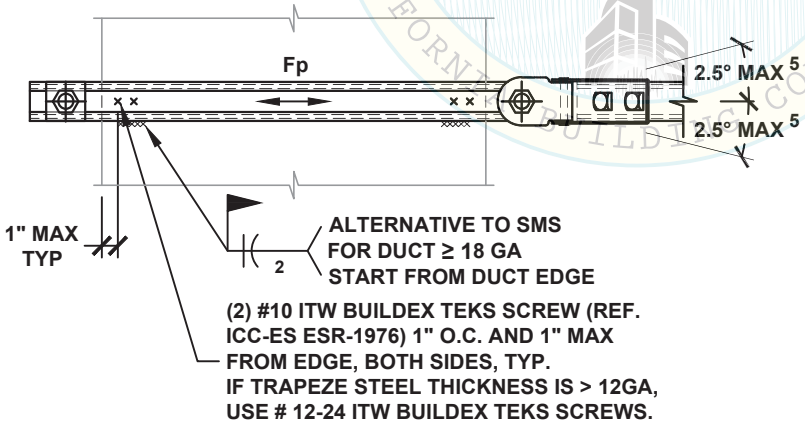

VIEW A-A

NOTES:

1. REF. SECTION A1 FOR GENERAL NOTES.
2. PROVIDE ROD STIFFENER ONLY WHERE SEISMIC BRACKET IS ATTACHED TO THE ROD AND ROD LENGTH (L) EXCEEDS 18". REF. APPROPRIATE M10 PAGES FOR DETAIL.
3. REF. PAGE A6.0 - A6.2 FOR ALTERNATE ARRANGEMENTS OF SEISMIC BRACES AND ANGLE OR HSS MEMBER AS TRAPEZE.
4. PROVIDE (1) 1/2" DIA. CONNECTION IN CENTER HOLE WHEN STRUT BRACE IS INSTALLED INSIDE THE BRACKET AND (2) 1/2" DIA. CONNECTIONS IN (2) OUTER HOLES WHEN THE BRACE IS INSTALLED OUTSIDE OF THE BRACKET. REF. X2.3 FOR CONNECTION DETAILS.
5. ANGLE MAY BE INCREASED UP TO 15°, REF. PAGE A5.0.

REVIEWED FOR CODE COMPLIANCE
CALIFORNIA BUILDING CODE 2013
OPM-0043-13
BY: Jeffrey Y. Kikumoto
DATE: 06/23/2016

MASON WEST, INC.
1601 E. Miraloma Ave. Placentia, CA 92870
TEL (714) 630 - 0701, www.masonwest.com

Jiefu "Jeff" Zhang, SE
California SE No. S5270

PAGE
D1.10

HANGER ROD DIAMETER = 3/8"

RECTANGULAR DUCT LONGITUDINAL SEISMIC SOLID BRACING SYSTEM 30 PLF MAX

KIT OPTIONS
TS12L
TS1220L
TSH312L
TSH320L

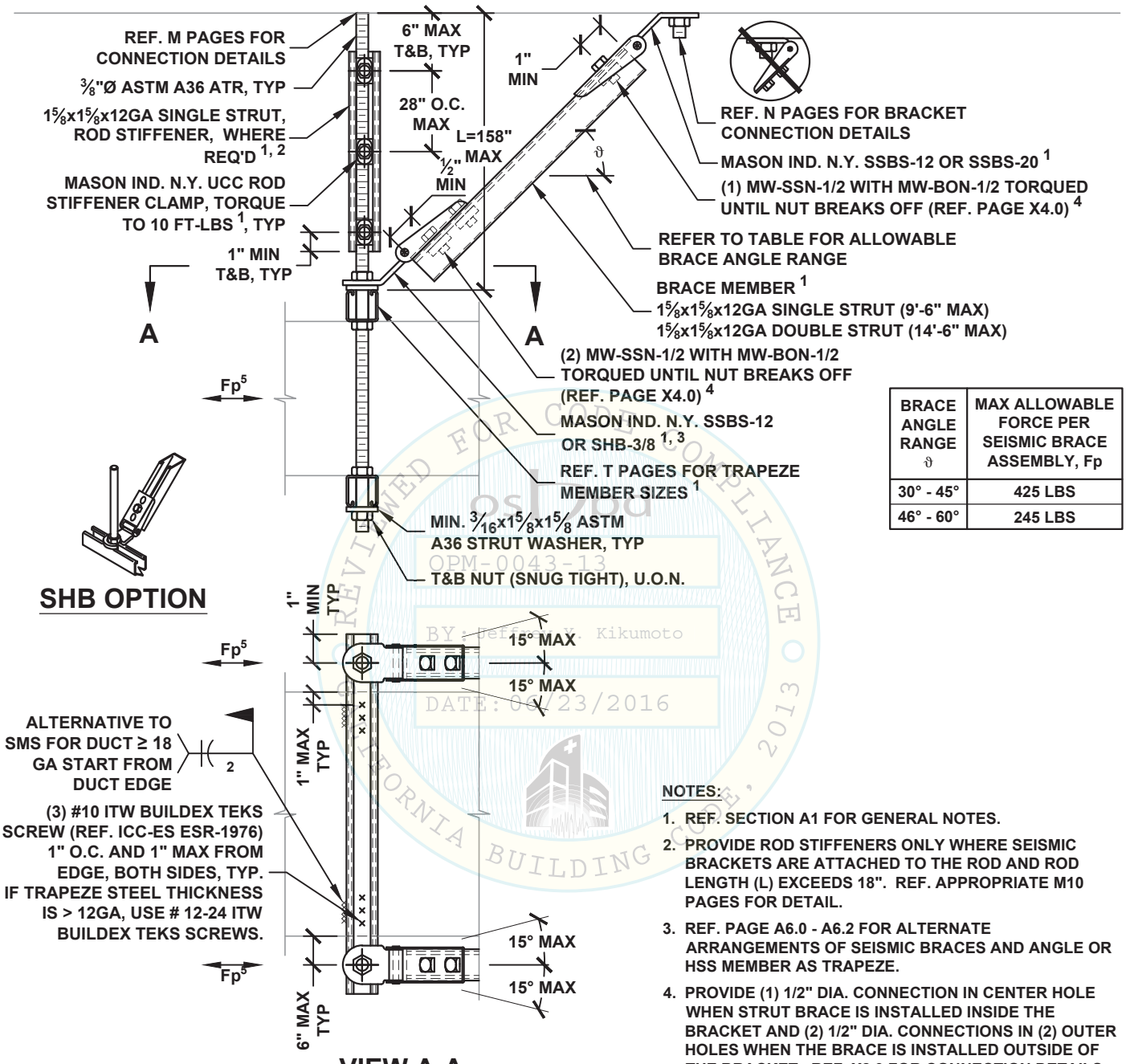

VIEW A-A

BRACE ANGLE RANGE ϑ	MAX ALLOWABLE FORCE PER SEISMIC BRACE ASSEMBLY, Fp
30° - 45°	425 LBS
46° - 60°	245 LBS

NOTES:

1. REF. SECTION A1 FOR GENERAL NOTES.
2. PROVIDE ROD STIFFENERS ONLY WHERE SEISMIC BRACKETS ARE ATTACHED TO THE ROD AND ROD LENGTH (L) EXCEEDS 18". REF. APPROPRIATE M10 PAGES FOR DETAIL.
3. REF. PAGE A6.0 - A6.2 FOR ALTERNATE ARRANGEMENTS OF SEISMIC BRACES AND ANGLE OR HSS MEMBER AS TRAPEZE.
4. PROVIDE (1) 1/2" DIA. CONNECTION IN CENTER HOLE WHEN STRUT BRACE IS INSTALLED INSIDE THE BRACKET AND (2) 1/2" DIA. CONNECTIONS IN (2) OUTER HOLES WHEN THE BRACE IS INSTALLED OUTSIDE OF THE BRACKET. REF. X2.3 FOR CONNECTION DETAILS.
5. DESIGN PROFESSIONAL SHALL CONSIDER ECCENTRIC LOAD DISTRIBUTION WHEN DETERMINING THE Fp VALUE USED IN DESIGN.

REVIEWED FOR CODE COMPLIANCE © 2013 CALIFORNIA BUILDING CODE
OPM-0043-13
BY: Jeffrey Y. Kikumoto
DATE: 06/23/2016

MASON WEST, INC.
1601 E. Miraloma Ave. Placentia, CA 92870
TEL (714) 630 - 0701, www.masonwest.com

Jiefu "Jeff" Zhang, SE
California SE No. S5270

PAGE
D1.11

HANGER ROD DIAMETER = 3/8"

RECTANGULAR DUCT ALL-DIRECTIONAL SEISMIC SOLID BRACING SYSTEM 30 PLF MAX

KIT OPTIONS
TS12A
TS1220A
TSH312A
TSH320A

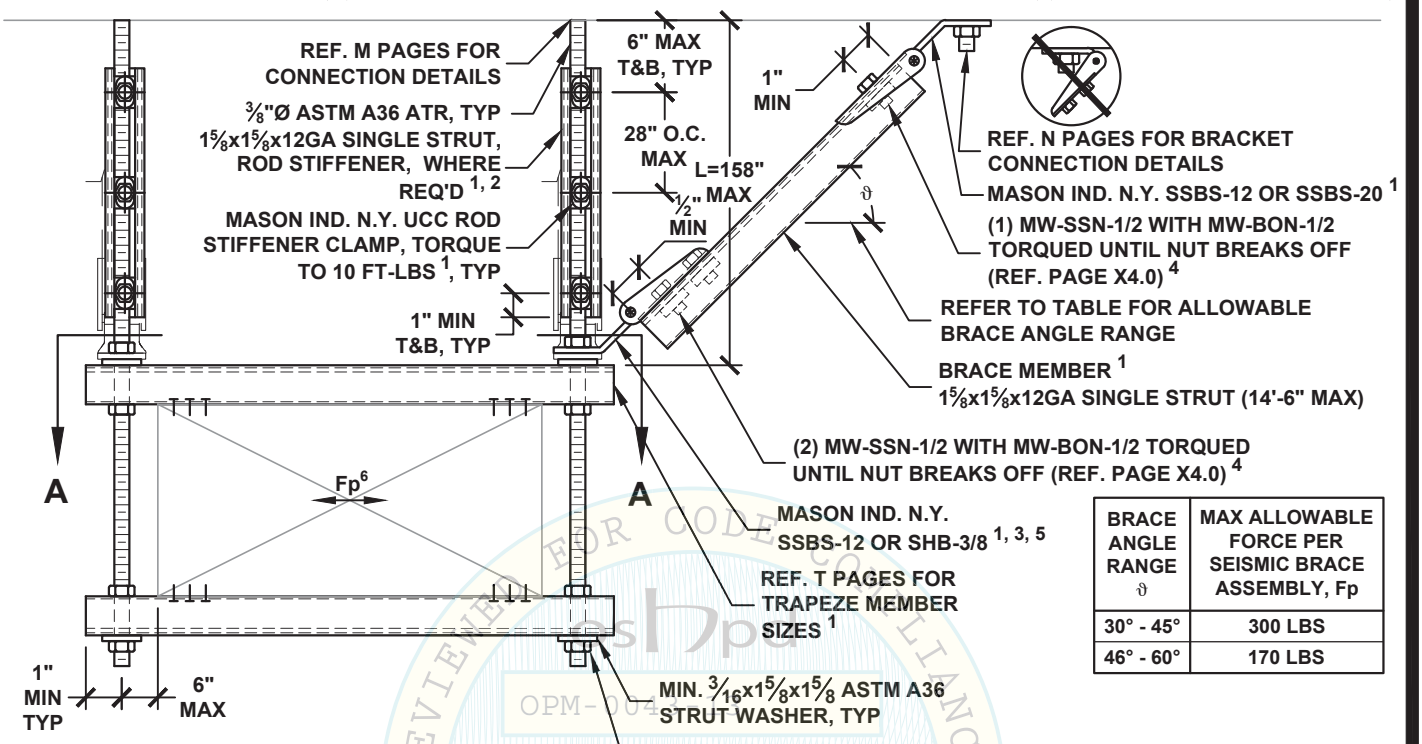

BRACE ANGLE RANGE ϑ	MAX ALLOWABLE FORCE PER SEISMIC BRACE ASSEMBLY, Fp
30° - 45°	300 LBS
46° - 60°	170 LBS

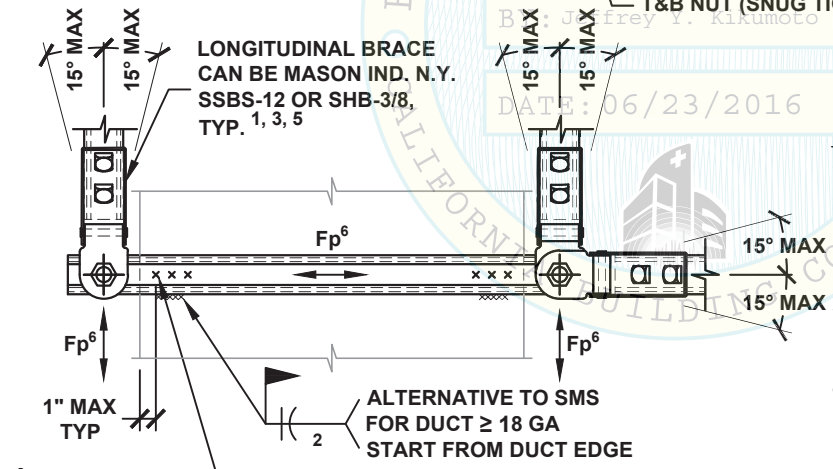

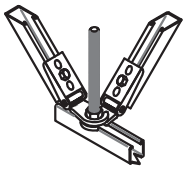

SHB OPTION

VIEW A-A

NOTES:

1. REF. SECTION A1 FOR GENERAL NOTES.
2. PROVIDE ROD STIFFENERS ONLY WHERE SEISMIC BRACKETS ARE ATTACHED TO THE ROD AND ROD LENGTH (L) EXCEEDS 18". REF. APPROPRIATE M10 PAGES FOR DETAIL.
3. REF. PAGE A6.0 - A6.2 FOR ALTERNATE ARRANGEMENTS OF SEISMIC BRACES AND ANGLE OR HSS MEMBER AS TRAPEZE.
4. PROVIDE (1) 1/2" DIA. CONNECTION IN CENTER HOLE WHEN STRUT BRACE IS INSTALLED INSIDE THE BRACKET AND (2) 1/2" DIA. CONNECTIONS IN (2) OUTER HOLES WHEN THE BRACE IS INSTALLED OUTSIDE OF THE BRACKET. REF. X2.3 FOR CONNECTION DETAILS.
5. MW-KY-38 (REF. X2.4) MUST BE USED ON TOP OF BOTTOM SHB WHEN STACKING (2) SHB ON THE SAME ROD.
6. DESIGN PROFESSIONAL SHALL CONSIDER ECCENTRIC LOAD DISTRIBUTION WHEN DETERMINING THE Fp VALUE USED IN DESIGN.

REVIEWED FOR CODE COMPLIANCE
OPM-0043-13
BY: Jeffrey Y. Kikumoto
DATE: 06/23/2016
CALIFORNIA BUILDING CODE 2013

MASON WEST, INC.
1601 E. Miraloma Ave. Placentia, CA 92870
TEL (714) 630 - 0701, www.masonwest.com

Jiefu "Jeff" Zhang, SE
California SE No. S5270

PAGE
D1.12

HANGER ROD DIAMETER = ½"

RECTANGULAR DUCT TRANSVERSE SEISMIC SOLID BRACING SYSTEM 60 PLF MAX

KIT OPTIONS
TS12T
TS1220T
TSH412T
TSH420T

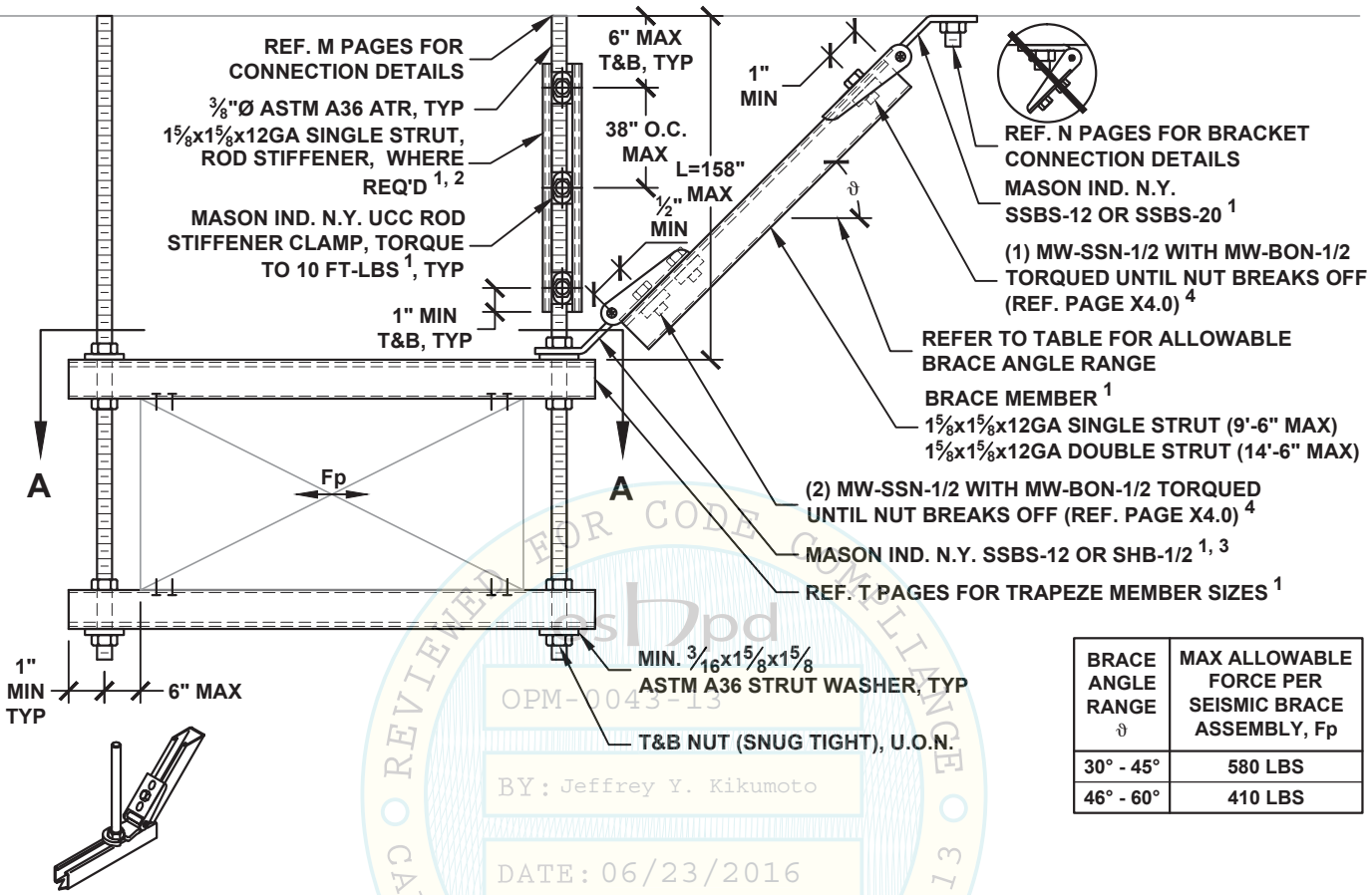

BRACE ANGLE RANGE ϑ	MAX ALLOWABLE FORCE PER SEISMIC BRACE ASSEMBLY, Fp
30° - 45°	580 LBS
46° - 60°	410 LBS

SHB OPTION

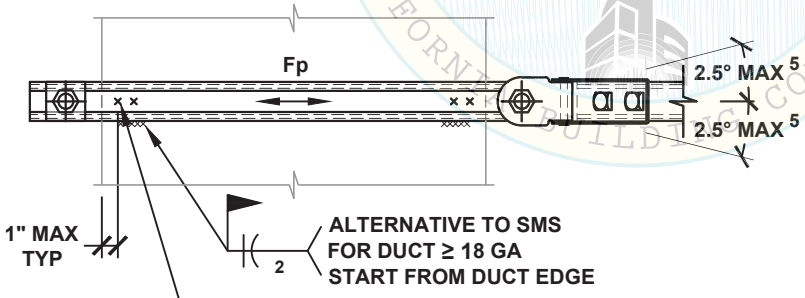

VIEW A-A

NOTES:

1. REF. SECTION A1 FOR GENERAL NOTES.
2. PROVIDE ROD STIFFENER ONLY WHERE SEISMIC BRACKET IS ATTACHED TO THE ROD AND ROD LENGTH (L) EXCEEDS 25". REF. APPROPRIATE M10 PAGES FOR DETAIL.
3. REF. PAGE A6.0 - A6.2 FOR ALTERNATE ARRANGEMENTS OF SEISMIC BRACES AND ANGLE OR HSS MEMBER AS TRAPEZE.
4. PROVIDE (1) 1/2" DIA. CONNECTION IN CENTER HOLE WHEN STRUT BRACE IS INSTALLED INSIDE THE BRACKET AND (2) 1/2" DIA. CONNECTIONS IN (2) OUTER HOLES WHEN THE BRACE IS INSTALLED OUTSIDE OF THE BRACKET. REF. X2.3 FOR CONNECTION DETAILS.
5. ANGLE MAY BE INCREASED UP TO 15°, REF. PAGE A5.0.

REVIEWED FOR CODE COMPLIANCE
CALIFORNIA BUILDING CODE, 2013
OPM-0043-13
BY: Jeffrey Y. Kikumoto
DATE: 06/23/2016

MASON WEST, INC.
1601 E. Miraloma Ave. Placentia, CA 92870
TEL (714) 630 - 0701, www.masonwest.com

Jiefu "Jeff" Zhang, SE
California SE No. S5270

PAGE
D1.20

HANGER ROD DIAMETER = ½"

RECTANGULAR DUCT LONGITUDINAL SEISMIC SOLID BRACING SYSTEM 60 PLF MAX

KIT OPTIONS
TS12L
TS1220L
TSH412L
TSH420L

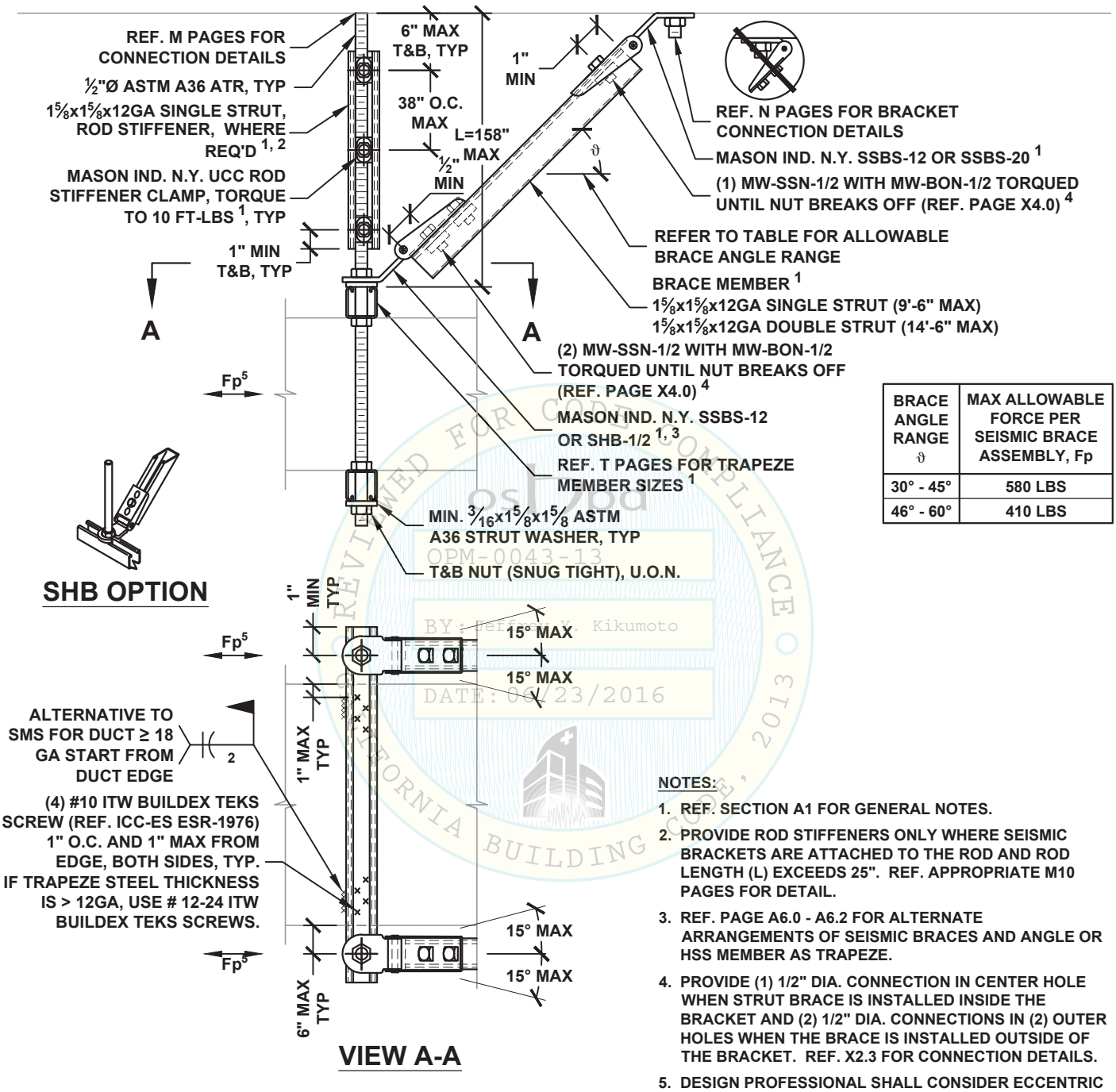

BRACE ANGLE RANGE ϑ	MAX ALLOWABLE FORCE PER SEISMIC BRACE ASSEMBLY, Fp
30° - 45°	580 LBS
46° - 60°	410 LBS

REVIEWED FOR CODE COMPLIANCE
OSHPD
OPM-0043-13
BY: Jeffrey Kikumoto
DATE: 06/23/2016
CALIFORNIA BUILDING CODE, 2013

NOTES:

1. REF. SECTION A1 FOR GENERAL NOTES.
2. PROVIDE ROD STIFFENERS ONLY WHERE SEISMIC BRACKETS ARE ATTACHED TO THE ROD AND ROD LENGTH (L) EXCEEDS 25". REF. APPROPRIATE M10 PAGES FOR DETAIL.
3. REF. PAGE A6.0 - A6.2 FOR ALTERNATE ARRANGEMENTS OF SEISMIC BRACES AND ANGLE OR HSS MEMBER AS TRAPEZE.
4. PROVIDE (1) 1/2" DIA. CONNECTION IN CENTER HOLE WHEN STRUT BRACE IS INSTALLED INSIDE THE BRACKET AND (2) 1/2" DIA. CONNECTIONS IN (2) OUTER HOLES WHEN THE BRACE IS INSTALLED OUTSIDE OF THE BRACKET. REF. X2.3 FOR CONNECTION DETAILS.
5. DESIGN PROFESSIONAL SHALL CONSIDER ECCENTRIC LOAD DISTRIBUTION WHEN DETERMINING THE Fp VALUE USED IN DESIGN.

MASON WEST, INC.
1601 E. Miraloma Ave. Placentia, CA 92870
TEL (714) 630 - 0701, www.masonwest.com

Jiefu "Jeff" Zhang, SE
California SE No. S5270

PAGE
D1.21

HANGER ROD DIAMETER = ½"

RECTANGULAR DUCT ALL-DIRECTIONAL SEISMIC SOLID BRACING SYSTEM 60 PLF MAX

KIT OPTIONS
TS12A
TS1220A
TSH412A
TSH420A

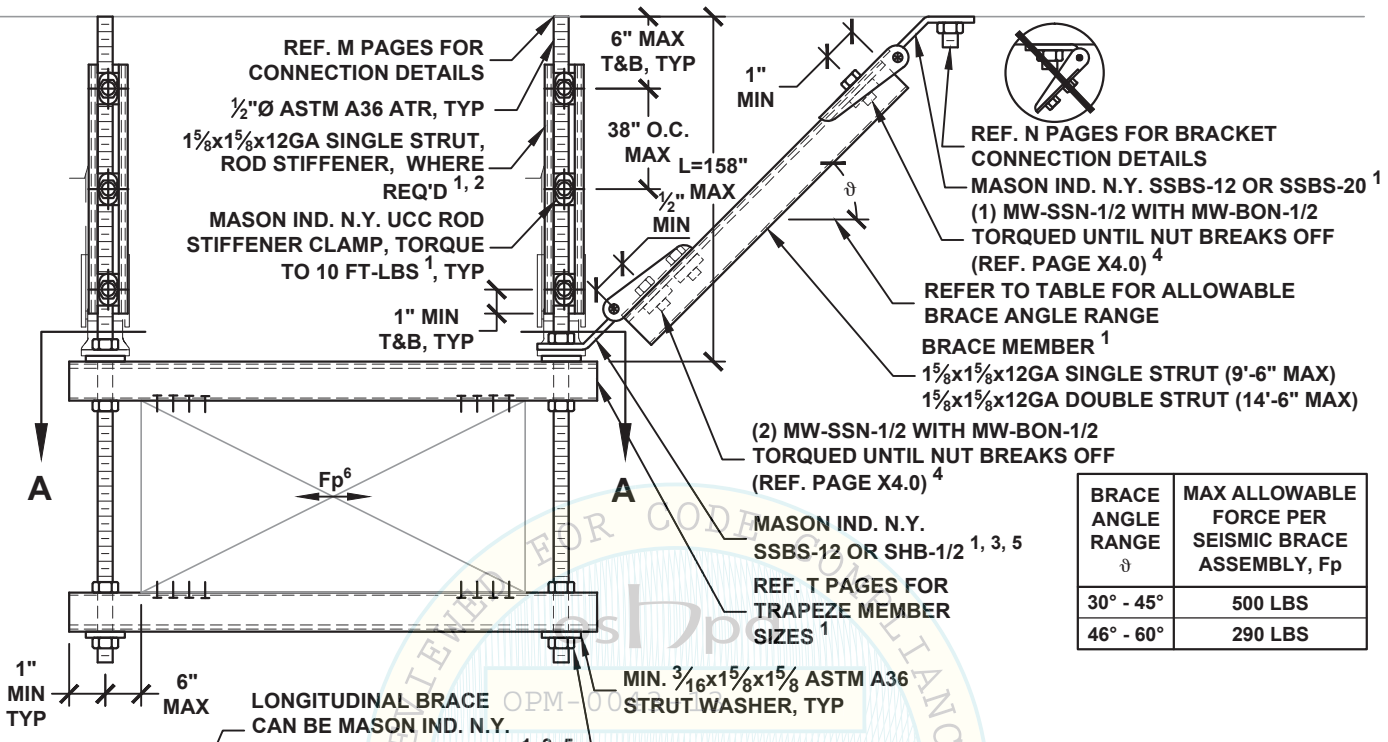

BRACE ANGLE RANGE ϑ	MAX ALLOWABLE FORCE PER SEISMIC BRACE ASSEMBLY, Fp
30° - 45°	500 LBS
46° - 60°	290 LBS

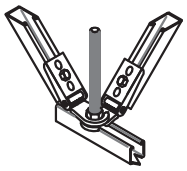

SHB OPTION

VIEW A-A

NOTES:

1. REF. SECTION A1 FOR GENERAL NOTES.
2. PROVIDE ROD STIFFENERS ONLY WHERE SEISMIC BRACKETS ARE ATTACHED TO THE ROD AND ROD LENGTH (L) EXCEEDS 25". REF. APPROPRIATE M10 PAGES FOR DETAIL.
3. REF. PAGE A6.0 - A6.2 FOR ALTERNATE ARRANGEMENTS OF SEISMIC BRACES AND ANGLE OR HSS MEMBER AS TRAPEZE.
4. PROVIDE (1) 1/2" DIA. CONNECTION IN CENTER HOLE WHEN STRUT BRACE IS INSTALLED INSIDE THE BRACKET AND (2) 1/2" DIA. CONNECTIONS IN (2) OUTER HOLES WHEN THE BRACE IS INSTALLED OUTSIDE OF THE BRACKET. REF. X2.3 FOR CONNECTION DETAILS.
5. MW-KY-50 (REF. X2.4) MUST BE USED ON TOP OF BOTTOM SHB WHEN STACKING (2) SHB ON THE SAME ROD.
6. DESIGN PROFESSIONAL SHALL CONSIDER ECCENTRIC LOAD DISTRIBUTION WHEN DETERMINING THE Fp VALUE USED IN DESIGN.

REVIEWED FOR CODE COMPLIANCE OPM-0043-13
By: Jeffrey Y. Kikumoto
DATE: 06/23/2016
CALIFORNIA BUILDING CODE, 2013

MASON WEST, INC.
1601 E. Miraloma Ave. Placentia, CA 92870
TEL (714) 630 - 0701, www.masonwest.com

Jiefu "Jeff" Zhang, SE
California SE No. S5270

PAGE
D1.22

HANGER ROD DIAMETER = 5/8"

RECTANGULAR DUCT TRANSVERSE SEISMIC SOLID BRACING SYSTEM 100 PLF MAX

KIT OPTIONS
TS20T
TS2012T
TSH512T
TSH520T

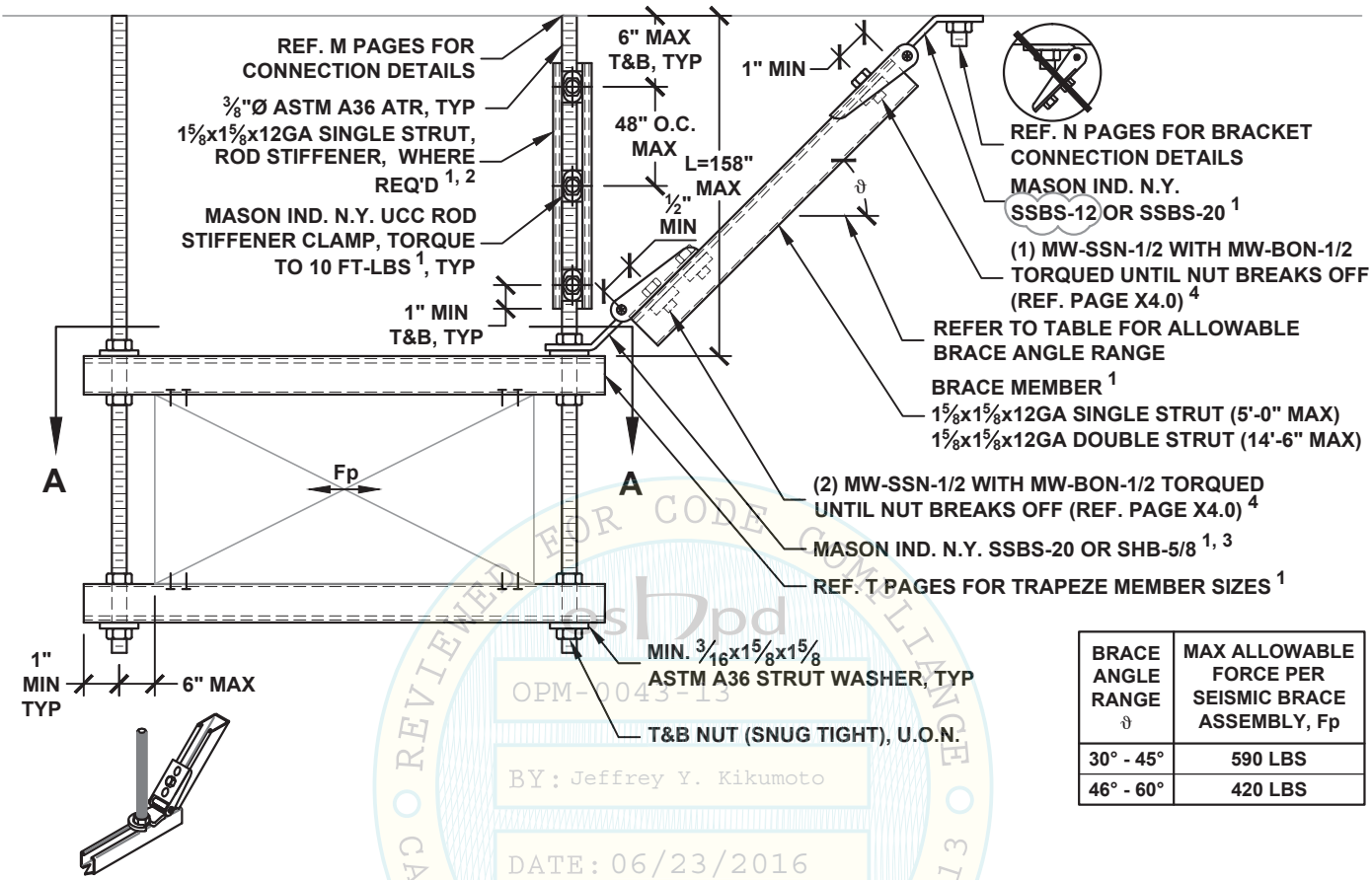

BRACE ANGLE RANGE ϑ	MAX ALLOWABLE FORCE PER SEISMIC BRACE ASSEMBLY, Fp
30° - 45°	590 LBS
46° - 60°	420 LBS

SHB OPTION

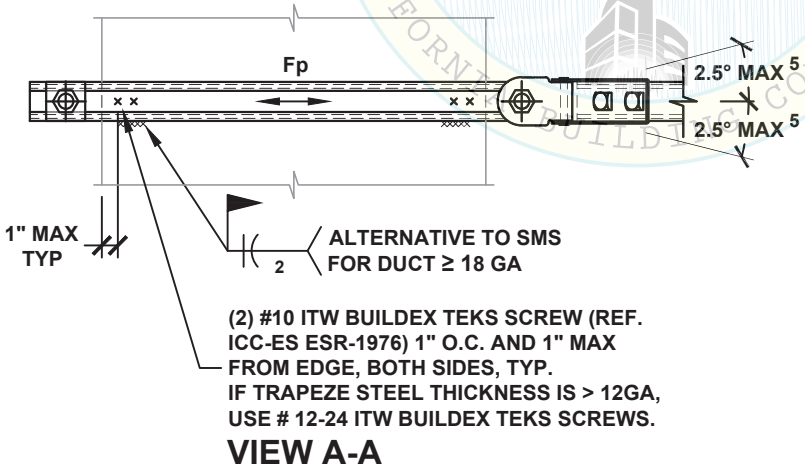

VIEW A-A

NOTES:

1. REF. SECTION A1 FOR GENERAL NOTES.
2. PROVIDE ROD STIFFENER ONLY WHERE SEISMIC BRACKET IS ATTACHED TO THE ROD AND ROD LENGTH (L) EXCEEDS 31". REF. APPROPRIATE M10 PAGES FOR DETAIL.
3. REF. PAGE A6.0 - A6.2 FOR ALTERNATE ARRANGEMENTS OF SEISMIC BRACES AND ANGLE OR HSS MEMBER AS TRAPEZE.
4. PROVIDE (1) 1/2" DIA. CONNECTION IN CENTER HOLE WHEN STRUT BRACE IS INSTALLED INSIDE THE BRACKET AND (2) 1/2" DIA. CONNECTIONS IN (2) OUTER HOLES WHEN THE BRACE IS INSTALLED OUTSIDE OF THE BRACKET. REF. X2.3 FOR CONNECTION DETAILS.
5. ANGLE MAY BE INCREASED UP TO 15°, REF. PAGE A5.0.

REVIEWED FOR CODE COMPLIANCE
CALIFORNIA BUILDING CODE, 2013
OPM-0043-13
BY: Jeffrey Y. Kikumoto
DATE: 06/23/2016

MASON WEST, INC.
1601 E. Miraloma Ave. Placentia, CA 92870
TEL (714) 630 - 0701, www.masonwest.com

Jiefu "Jeff" Zhang, SE
California SE No. S5270

HANGER ROD DIAMETER = 5/8"

RECTANGULAR DUCT LONGITUDINAL SEISMIC SOLID BRACING SYSTEM 100 PLF MAX

KIT OPTIONS
TS20L
TS2012L
TSH512L
TSH520L

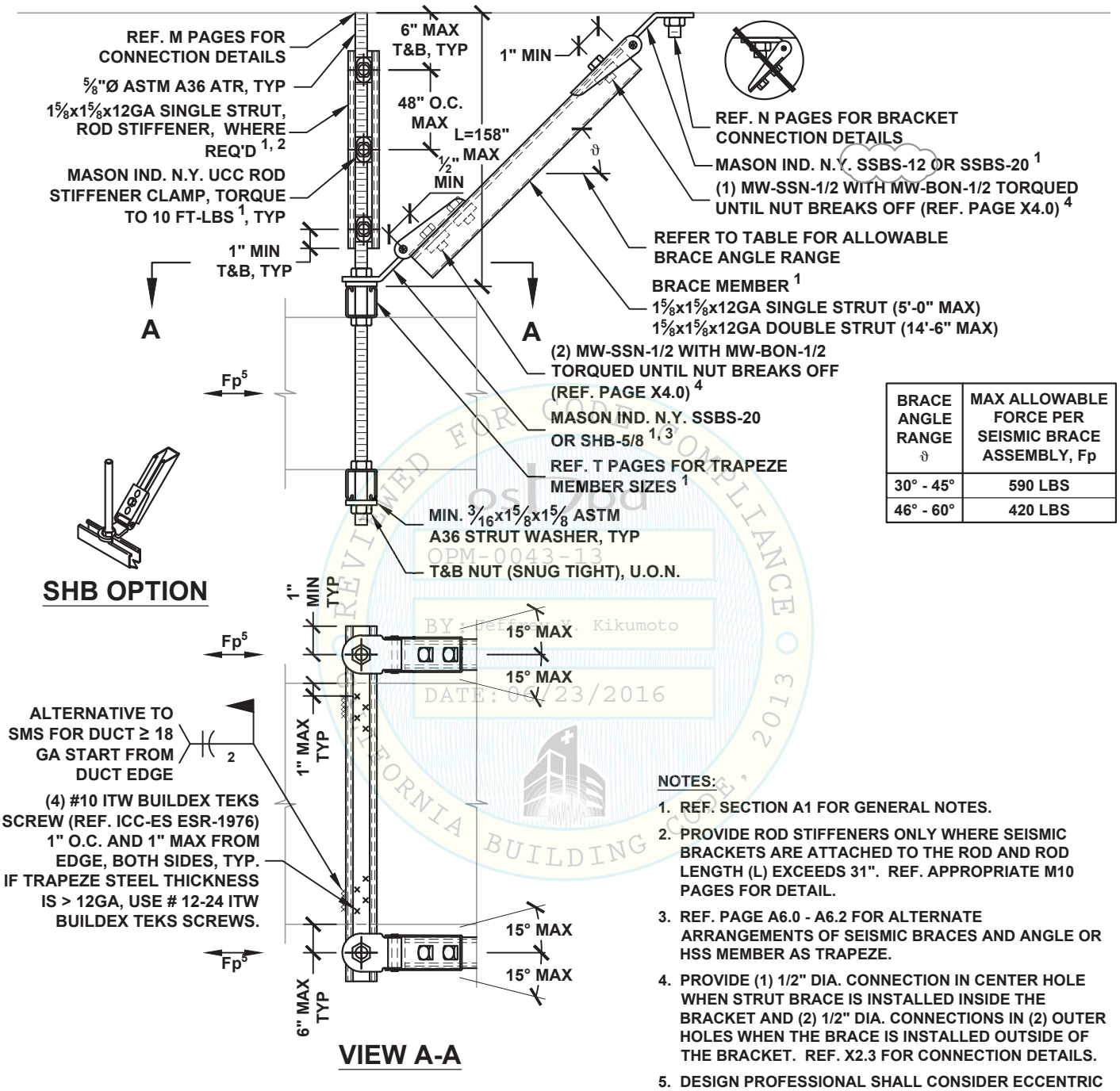

BRACE ANGLE RANGE ϑ	MAX ALLOWABLE FORCE PER SEISMIC BRACE ASSEMBLY, Fp
30° - 45°	590 LBS
46° - 60°	420 LBS

REVIEWED FOR CODE COMPLIANCE © 2013 CALIFORNIA BUILDING CODE
OSHPD
OPM-0043-13
BY: Jeffrey Kikumoto
DATE: 06/23/2016

NOTES:

1. REF. SECTION A1 FOR GENERAL NOTES.
2. PROVIDE ROD STIFFENERS ONLY WHERE SEISMIC BRACKETS ARE ATTACHED TO THE ROD AND ROD LENGTH (L) EXCEEDS 31". REF. APPROPRIATE M10 PAGES FOR DETAIL.
3. REF. PAGE A6.0 - A6.2 FOR ALTERNATE ARRANGEMENTS OF SEISMIC BRACES AND ANGLE OR HSS MEMBER AS TRAPEZE.
4. PROVIDE (1) 1/2" DIA. CONNECTION IN CENTER HOLE WHEN STRUT BRACE IS INSTALLED INSIDE THE BRACKET AND (2) 1/2" DIA. CONNECTIONS IN (2) OUTER HOLES WHEN THE BRACE IS INSTALLED OUTSIDE OF THE BRACKET. REF. X2.3 FOR CONNECTION DETAILS.
5. DESIGN PROFESSIONAL SHALL CONSIDER ECCENTRIC LOAD DISTRIBUTION WHEN DETERMINING THE Fp VALUE USED IN DESIGN.

MASON WEST, INC.
1601 E. Miraloma Ave. Placentia, CA 92870
TEL (714) 630 - 0701, www.masonwest.com

Jiefu "Jeff" Zhang, SE
California SE No. S5270

HANGER ROD DIAMETER = 5/8"

RECTANGULAR DUCT ALL-DIRECTIONAL SEISMIC SOLID BRACING SYSTEM 100 PLF MAX

KIT OPTIONS
TS20A
TS2012A
TSH512A
TSH520A

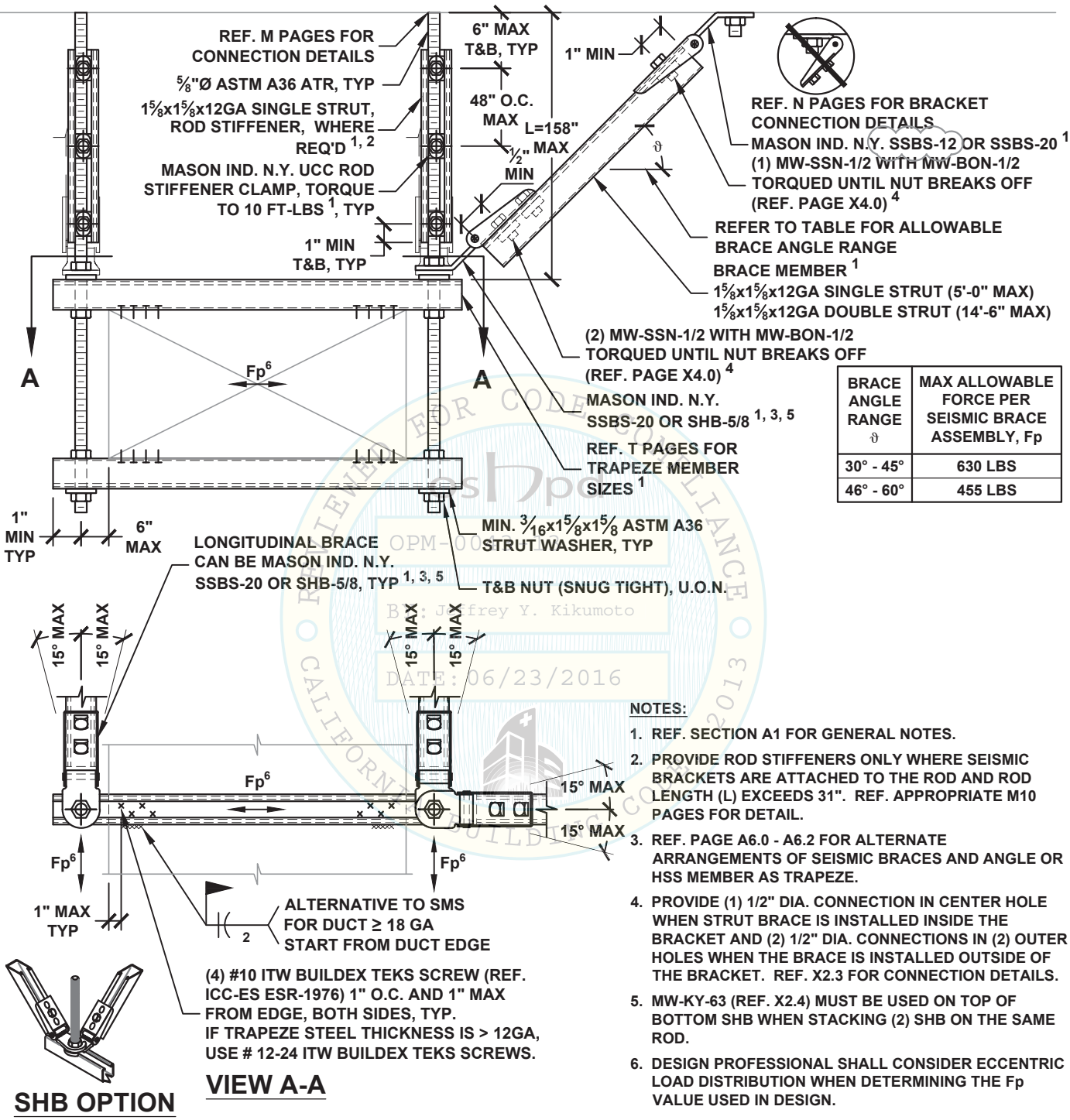

BRACE ANGLE RANGE ϑ	MAX ALLOWABLE FORCE PER SEISMIC BRACE ASSEMBLY, Fp
30° - 45°	630 LBS
46° - 60°	455 LBS

SHB OPTION

VIEW A-A

NOTES:

1. REF. SECTION A1 FOR GENERAL NOTES.
2. PROVIDE ROD STIFFENERS ONLY WHERE SEISMIC BRACKETS ARE ATTACHED TO THE ROD AND ROD LENGTH (L) EXCEEDS 31". REF. APPROPRIATE M10 PAGES FOR DETAIL.
3. REF. PAGE A6.0 - A6.2 FOR ALTERNATE ARRANGEMENTS OF SEISMIC BRACES AND ANGLE OR HSS MEMBER AS TRAPEZE.
4. PROVIDE (1) 1/2" DIA. CONNECTION IN CENTER HOLE WHEN STRUT BRACE IS INSTALLED INSIDE THE BRACKET AND (2) 1/2" DIA. CONNECTIONS IN (2) OUTER HOLES WHEN THE BRACE IS INSTALLED OUTSIDE OF THE BRACKET. REF. X2.3 FOR CONNECTION DETAILS.
5. MW-KY-63 (REF. X2.4) MUST BE USED ON TOP OF BOTTOM SHB WHEN STACKING (2) SHB ON THE SAME ROD.
6. DESIGN PROFESSIONAL SHALL CONSIDER ECCENTRIC LOAD DISTRIBUTION WHEN DETERMINING THE Fp VALUE USED IN DESIGN.

REVIEWED FOR CODE COMPLIANCE OPM-0043-13 By: Jeffrey Y. Kikumoto DATE: 06/23/2016 CALIFORNIA BUILDING CODE 2013

MASON WEST, INC.
1601 E. Miraloma Ave. Placentia, CA 92870
TEL (714) 630 - 0701, www.masonwest.com

Jiefu "Jeff" Zhang, SE
California SE No. S5270

PAGE
D1.32

HANGER ROD DIAMETER = 5/8"	RECTANGULAR DUCT TRANSVERSE SEISMIC SOLID BRACING SYSTEM 100 PLF MAX	KIT OPTIONS TSH5T

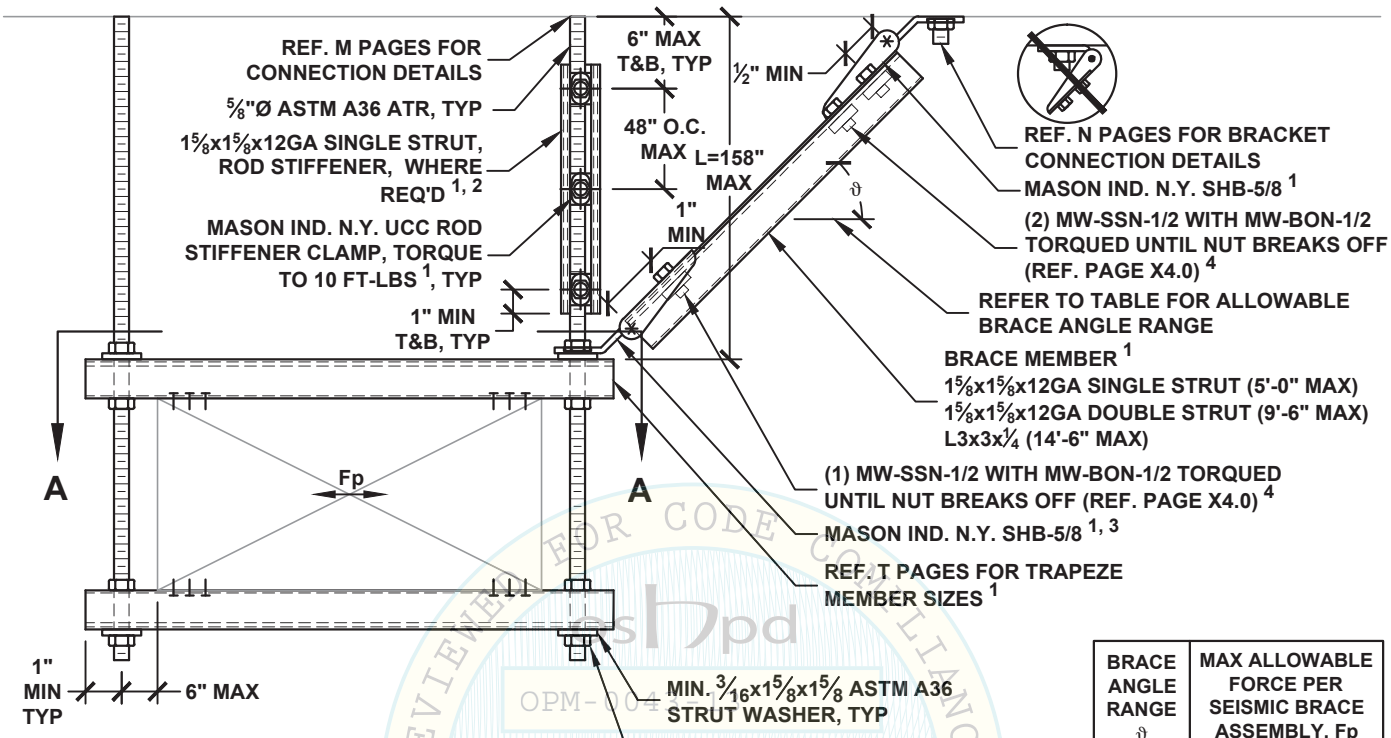

BRACE ANGLE RANGE ϑ	MAX ALLOWABLE FORCE PER SEISMIC BRACE ASSEMBLY, Fp
30° - 45°	1050 LBS
46° - 60°	645 LBS

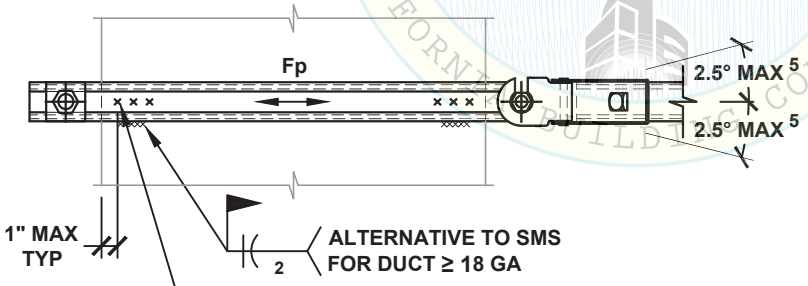

VIEW A-A

NOTES:

1. REF. SECTION A1 FOR GENERAL NOTES.
2. PROVIDE ROD STIFFENER ONLY WHERE SEISMIC BRACKET IS ATTACHED TO THE ROD AND ROD LENGTH (L) EXCEEDS 31". REF. APPROPRIATE M10 PAGES FOR DETAIL.
3. REF. PAGE A6.0 - A6.2 FOR ALTERNATE ARRANGEMENTS OF SEISMIC BRACES AND ANGLE OR HSS MEMBER AS TRAPEZE.
4. PROVIDE (1) 1/2" DIA. CONNECTION IN CENTER HOLE WHEN STRUT BRACE IS INSTALLED INSIDE THE BRACKET AND (2) 1/2" DIA. CONNECTIONS IN (2) OUTER HOLES WHEN THE BRACE IS INSTALLED OUTSIDE OF THE BRACKET. REF. X2.3 FOR CONNECTION DETAILS.
5. ANGLE MAY BE INCREASED UP TO 15°, REF. PAGE A5.0

REVIEWED FOR CODE COMPLIANCE
CALIFORNIA BUILDING CODE, 2013
OPM-0043-13
BY: Jeffrey T. Kikumoto
DATE: 06/23/2016

MASON WEST, INC.
1601 E. Miraloma Ave. Placentia, CA 92870
TEL (714) 630 - 0701, www.masonwest.com

Jiefu "Jeff" Zhang, SE
California SE No. S5270

PAGE
D1.33

HANGER ROD DIAMETER = 5/8"	RECTANGULAR DUCT LONGITUDINAL SEISMIC SOLID BRACING SYSTEM 100 PLF MAX	KIT OPTIONS TSH5L

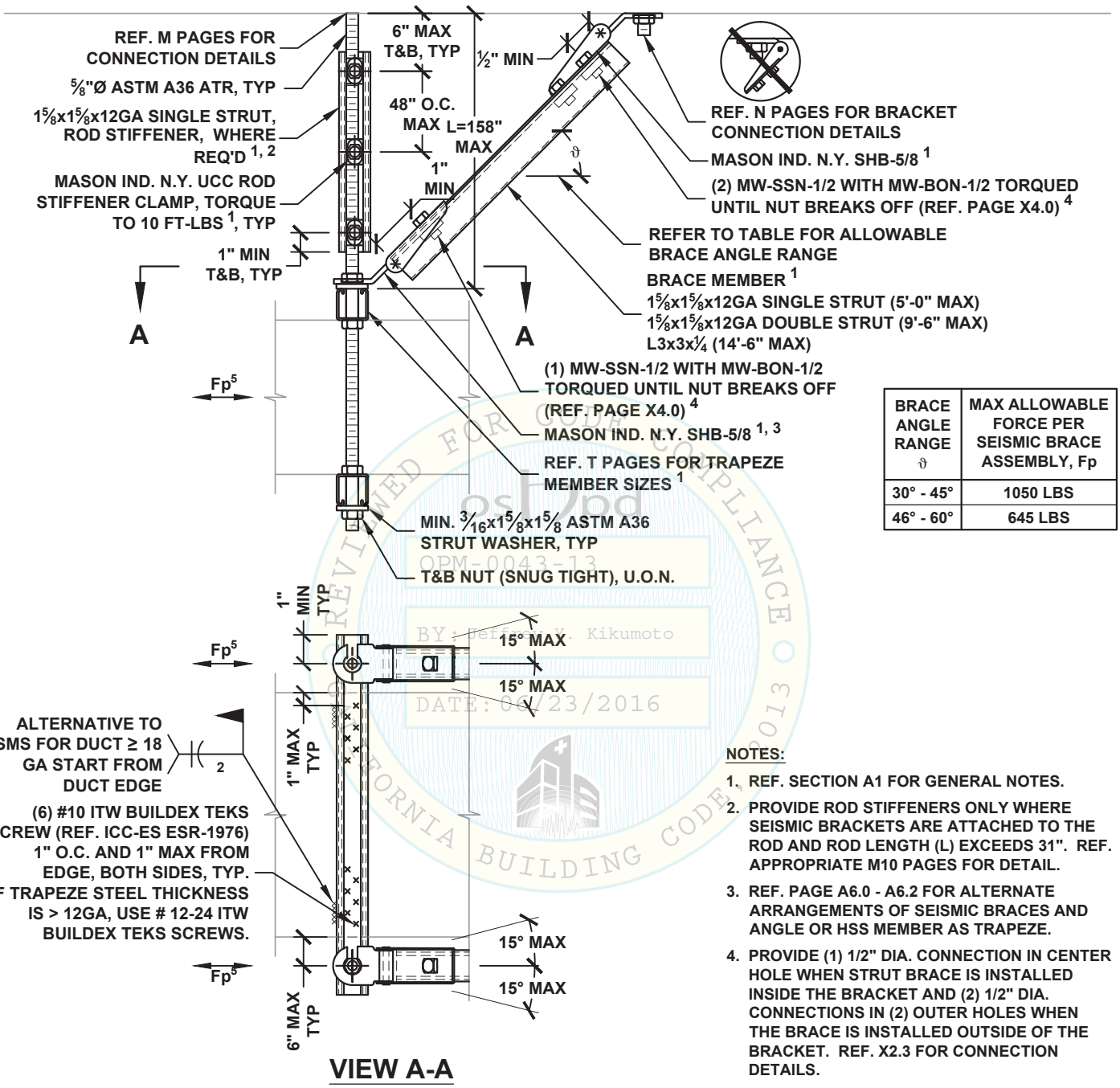

VIEW A-A

BRACE ANGLE RANGE ϑ	MAX ALLOWABLE FORCE PER SEISMIC BRACE ASSEMBLY, Fp
30° - 45°	1050 LBS
46° - 60°	645 LBS

OSHPD REVIEWED FOR CODE COMPLIANCE CALIFORNIA BUILDING CODE 2013
OPM-0043-13
BY: Jeffrey K. Kikumoto
DATE: 06/23/2016

NOTES:

1. REF. SECTION A1 FOR GENERAL NOTES.
2. PROVIDE ROD STIFFENERS ONLY WHERE SEISMIC BRACKETS ARE ATTACHED TO THE ROD AND ROD LENGTH (L) EXCEEDS 31". REF. APPROPRIATE M10 PAGES FOR DETAIL.
3. REF. PAGE A6.0 - A6.2 FOR ALTERNATE ARRANGEMENTS OF SEISMIC BRACES AND ANGLE OR HSS MEMBER AS TRAPEZE.
4. PROVIDE (1) 1/2" DIA. CONNECTION IN CENTER HOLE WHEN STRUT BRACE IS INSTALLED INSIDE THE BRACKET AND (2) 1/2" DIA. CONNECTIONS IN (2) OUTER HOLES WHEN THE BRACE IS INSTALLED OUTSIDE OF THE BRACKET. REF. X2.3 FOR CONNECTION DETAILS.
5. DESIGN PROFESSIONAL SHALL CONSIDER ECCENTRIC LOAD DISTRIBUTION WHEN DETERMINING THE Fp VALUE USED IN DESIGN.

MASON WEST, INC.
1601 E. Miraloma Ave. Placentia, CA 92870
TEL (714) 630 - 0701, www.masonwest.com

Jiefu "Jeff" Zhang, SE
California SE No. S5270

PAGE
D1.34

HANGER ROD DIAMETER = 5/8"

RECTANGULAR DUCT ALL-DIRECTIONAL SEISMIC SOLID BRACING SYSTEM 100 PLF MAX

KIT OPTIONS
TSH5A

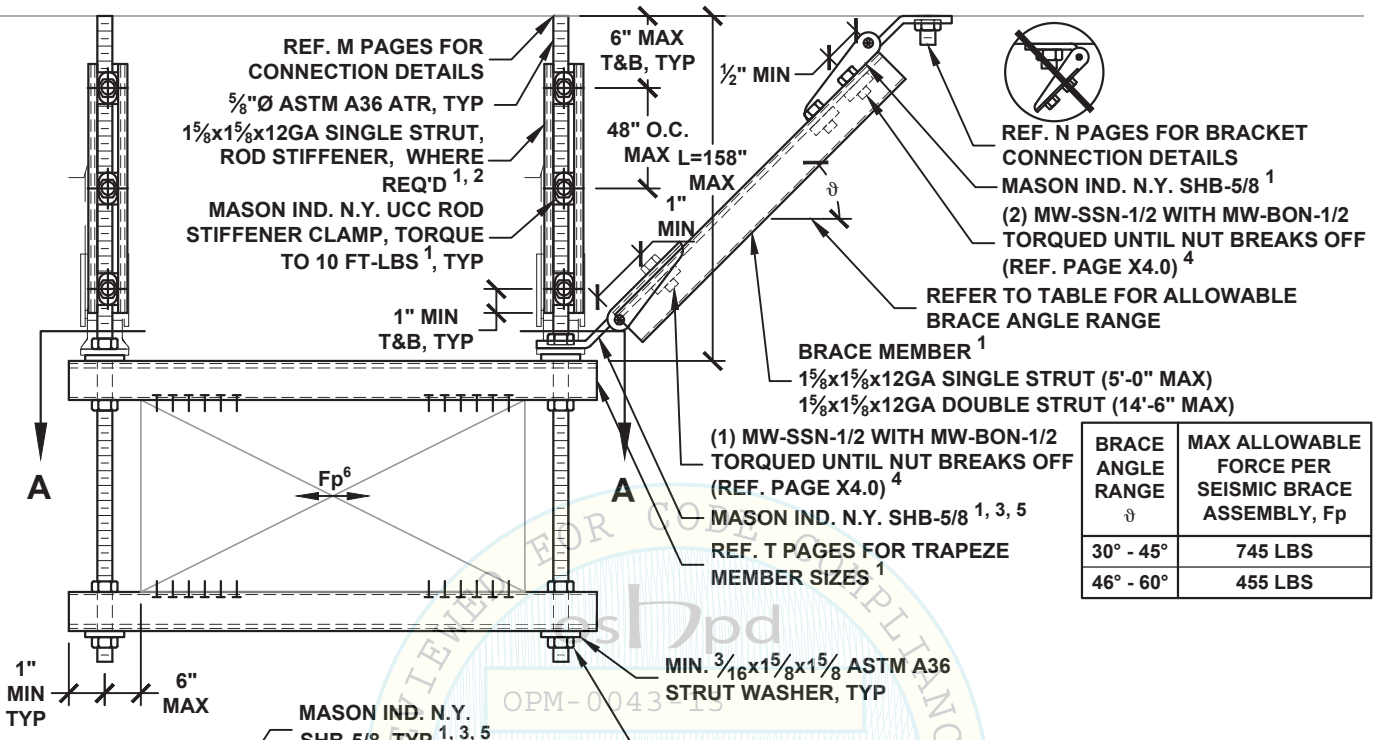

VIEW A-A

BRACE ANGLE RANGE ϑ	MAX ALLOWABLE FORCE PER SEISMIC BRACE ASSEMBLY, Fp
30° - 45°	745 LBS
46° - 60°	455 LBS

NOTES:

1. REF. SECTION A1 FOR GENERAL NOTES.
2. PROVIDE ROD STIFFENERS ONLY WHERE SEISMIC BRACKETS ARE ATTACHED TO THE ROD AND ROD LENGTH (L) EXCEEDS 31". REF. APPROPRIATE M10 PAGES FOR DETAIL.
3. REF. PAGE A6.0 - A6.2 FOR ALTERNATE ARRANGEMENTS OF SEISMIC BRACES AND ANGLE OR HSS MEMBER AS TRAPEZE.
4. PROVIDE (1) 1/2" DIA. CONNECTION IN CENTER HOLE WHEN STRUT BRACE IS INSTALLED INSIDE THE BRACKET AND (2) 1/2" DIA. CONNECTIONS IN (2) OUTER HOLES WHEN THE BRACE IS INSTALLED OUTSIDE OF THE BRACKET. REF. X2.3 FOR CONNECTION DETAILS.
5. MW-KY-63 (REF. X2.4) MUST BE USED ON TOP OF BOTTOM SHB WHEN STACKING (2) SHB ON THE SAME ROD.
6. DESIGN PROFESSIONAL SHALL CONSIDER ECCENTRIC LOAD DISTRIBUTION WHEN DETERMINING THE Fp VALUE USED IN DESIGN.

REVIEWED FOR CODE COMPLIANCE CALIFORNIA BUILDING CODE
OPM-0043-13
By: Jeffrey Y. Kikumoto
DATE: 06/23/2016

MASON WEST, INC.
1601 E. Miraloma Ave. Placentia, CA 92870
TEL (714) 630 - 0701, www.masonwest.com

Jiefu "Jeff" Zhang, SE
California SE No. S5270

PAGE
D1.35

HANGER ROD DIAMETER = 3/8"	ROUND DUCT TRANSVERSE SEISMIC SOLID BRACING SYSTEM 30 PLF MAX	KIT OPTIONS TS12T TS1220T TSH312T TSH320T

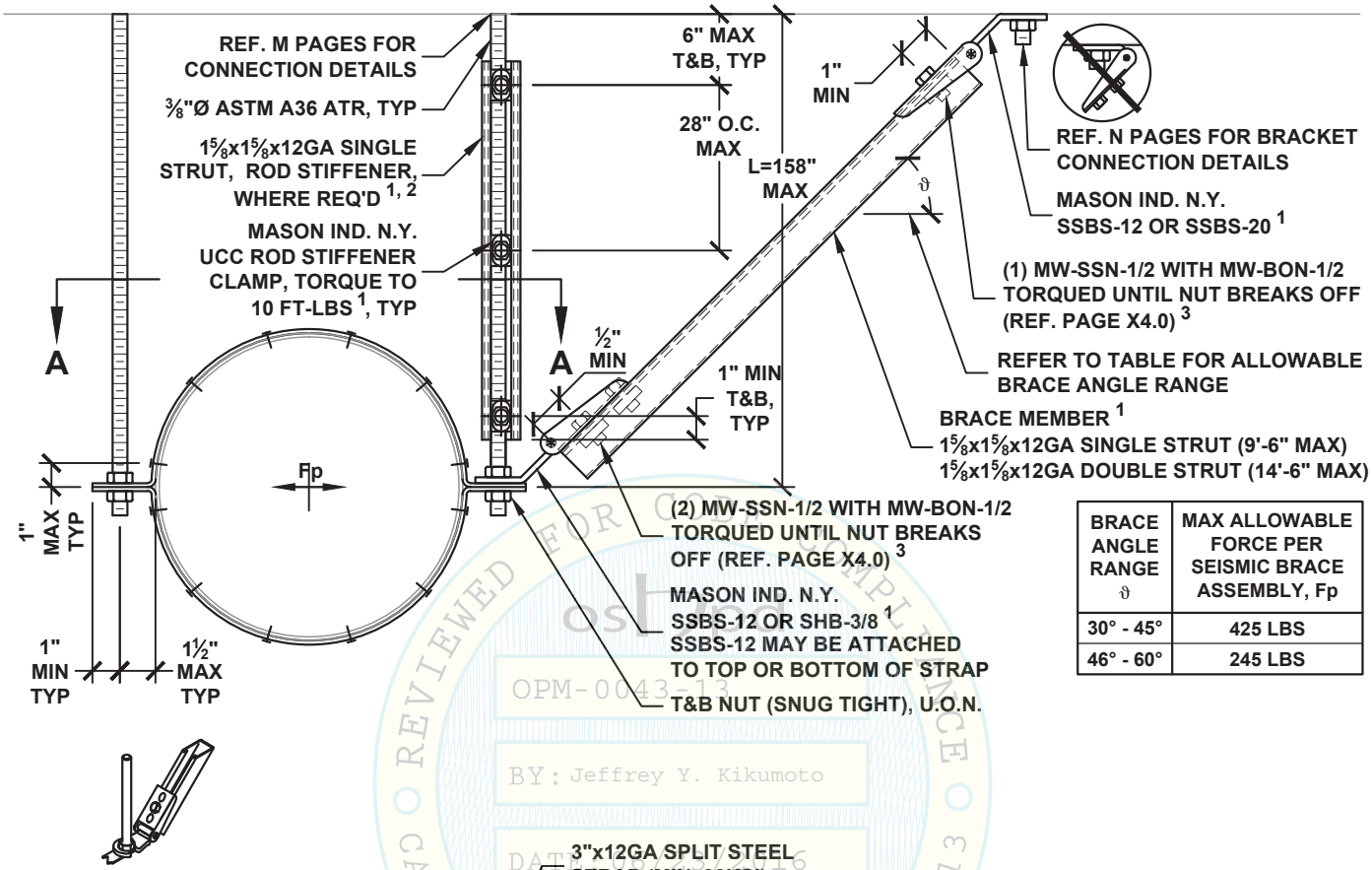

BRACE ANGLE RANGE ϑ	MAX ALLOWABLE FORCE PER SEISMIC BRACE ASSEMBLY, Fp
30° - 45°	425 LBS
46° - 60°	245 LBS

SHB OPTION

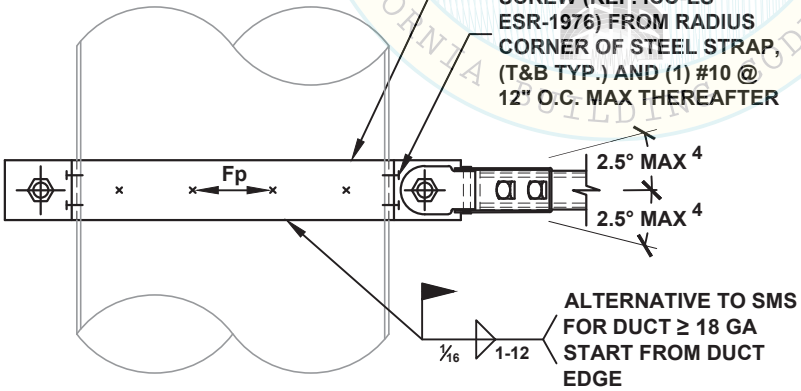

VIEW A-A

NOTES:

1. REF. SECTION A1 FOR GENERAL NOTES.
2. PROVIDE ROD STIFFENER ONLY WHERE SEISMIC BRACKET IS ATTACHED TO THE ROD AND ROD LENGTH (L) EXCEEDS 18". REF. APPROPRIATE M10 PAGES FOR DETAIL.
3. PROVIDE (1) 1/2" DIA. CONNECTION IN CENTER HOLE WHEN STRUT BRACE IS INSTALLED INSIDE THE BRACKET AND (2) 1/2" DIA. CONNECTIONS IN (2) OUTER HOLES WHEN THE BRACE IS INSTALLED OUTSIDE OF THE BRACKET. REF. X2.3 FOR CONNECTION DETAILS.
4. ANGLE MAY BE INCREASED UP TO 15°, REF. PAGE A5.0

OPM-0043-13
BY: Jeffrey Y. Kikumoto

MASON WEST, INC.
1601 E. Miraloma Ave. Placentia, CA 92870
TEL (714) 630 - 0701, www.masonwest.com

Jiefu "Jeff" Zhang, SE
California SE No. S5270

HANGER ROD DIAMETER = 3/8"

ROUND DUCT LONGITUDINAL SEISMIC SOLID BRACING SYSTEM 30 PLF MAX

KIT OPTIONS
TS12L
TS1220L
TSH312L
TSH320L

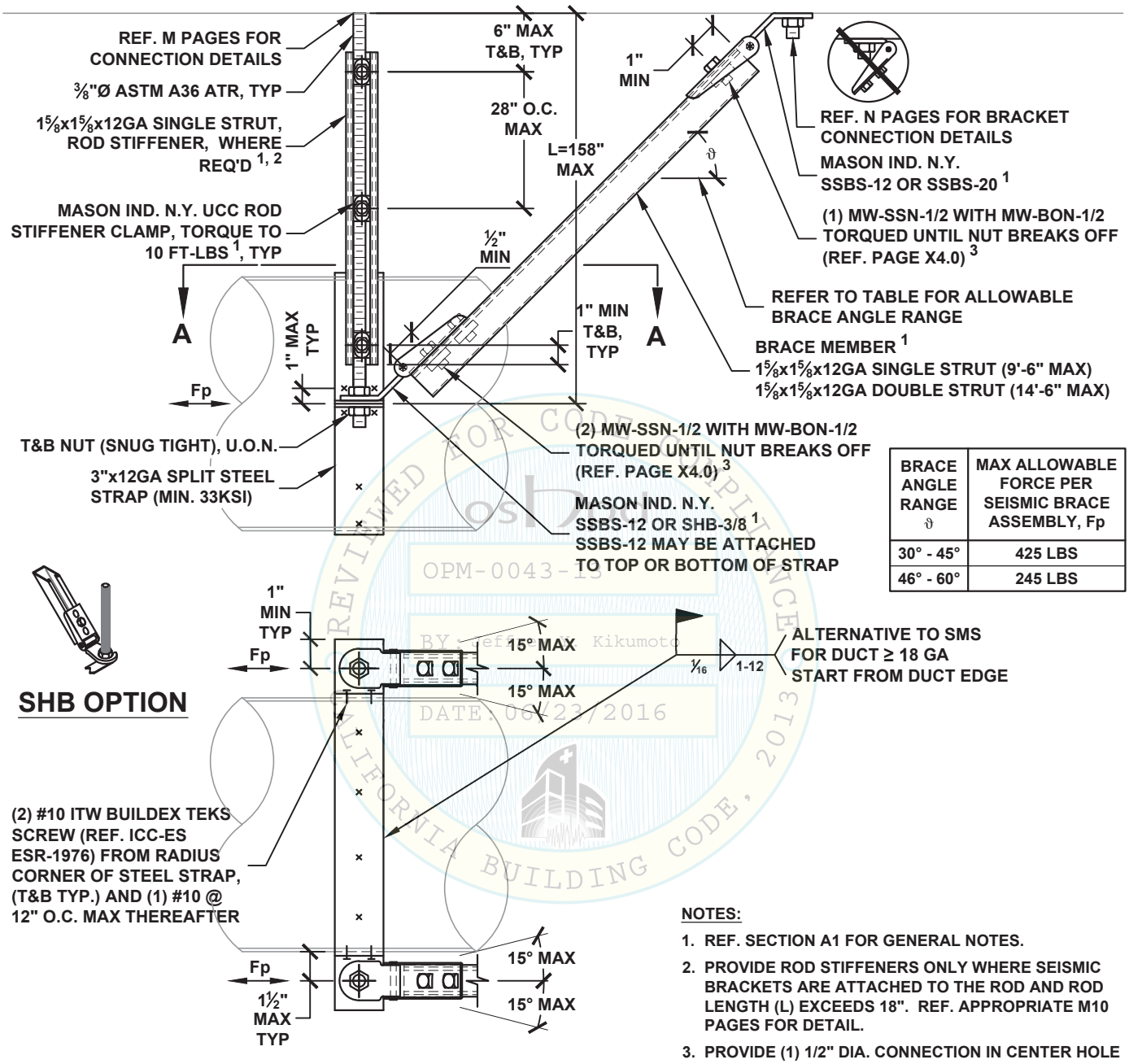

BRACE ANGLE RANGE ϑ	MAX ALLOWABLE FORCE PER SEISMIC BRACE ASSEMBLY, Fp
30° - 45°	425 LBS
46° - 60°	245 LBS

SHB OPTION

VIEW A-A

NOTES:

1. REF. SECTION A1 FOR GENERAL NOTES.
2. PROVIDE ROD STIFFENERS ONLY WHERE SEISMIC BRACKETS ARE ATTACHED TO THE ROD AND ROD LENGTH (L) EXCEEDS 18". REF. APPROPRIATE M10 PAGES FOR DETAIL.
3. PROVIDE (1) 1/2" DIA. CONNECTION IN CENTER HOLE WHEN STRUT BRACE IS INSTALLED INSIDE THE BRACKET AND (2) 1/2" DIA. CONNECTIONS IN (2) OUTER HOLES WHEN THE BRACE IS INSTALLED OUTSIDE OF THE BRACKET. REF. X2.3 FOR CONNECTION DETAILS.

REVIEWED FOR CODE COMPLIANCE
OPM-0043-13
BY: Jeffrey Kikumoto
DATE: 06/23/2016
CALIFORNIA BUILDING CODE, 2013

MASON WEST, INC.
1601 E. Miraloma Ave. Placentia, CA 92870
TEL (714) 630 - 0701, www.masonwest.com

Jiefu "Jeff" Zhang, SE
California SE No. S5270

HANGER ROD DIAMETER = ⅜"	ROUND DUCT ALL-DIRECTIONAL SEISMIC SOLID BRACING SYSTEM 30 PLF MAX	KIT OPTIONS TS12A TS1220A TSH312A TSH320A

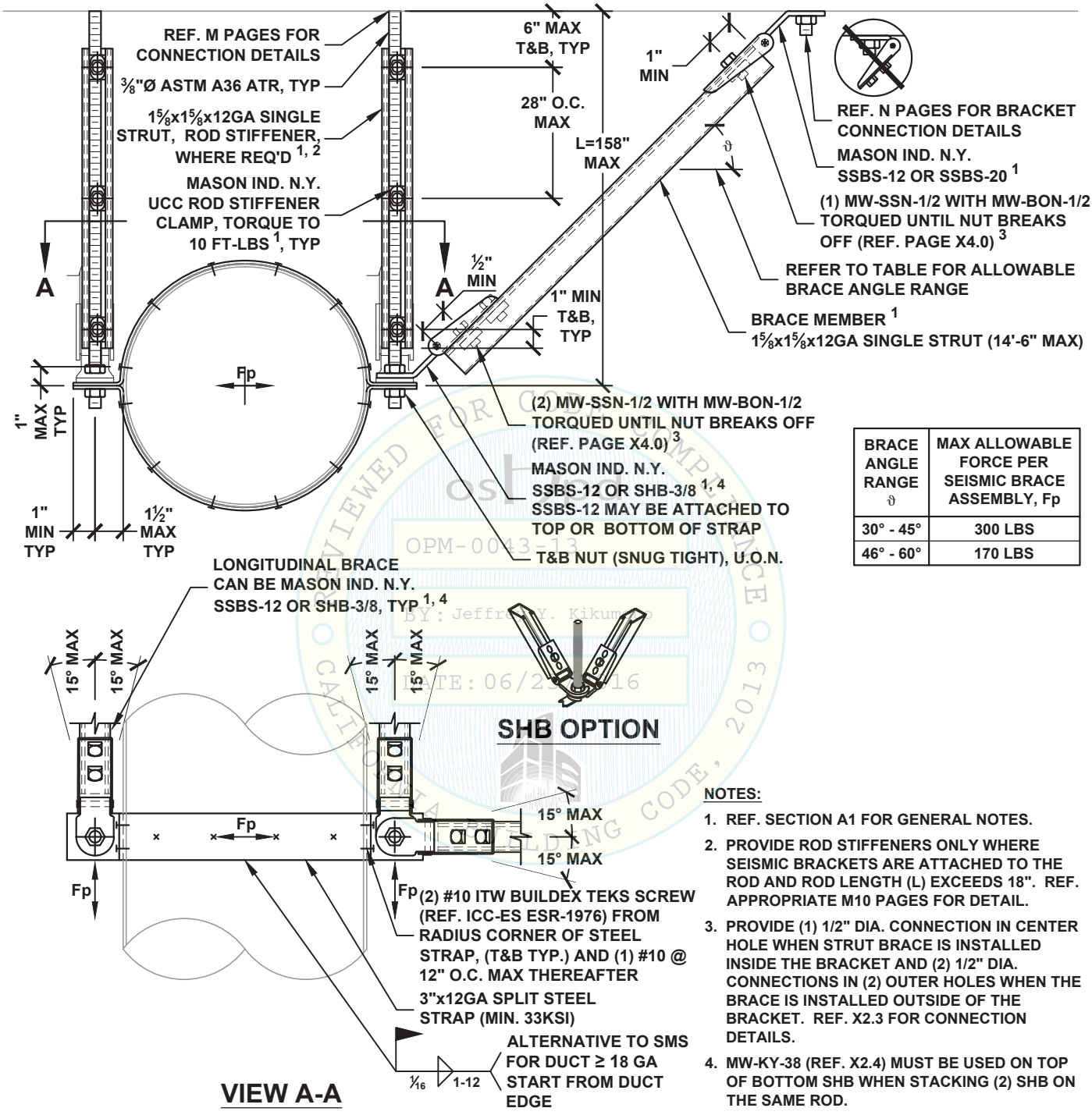

BRACE ANGLE RANGE ϑ	MAX ALLOWABLE FORCE PER SEISMIC BRACE ASSEMBLY, Fp
30° - 45°	300 LBS
46° - 60°	170 LBS

NOTES:

1. REF. SECTION A1 FOR GENERAL NOTES.
2. PROVIDE ROD STIFFENERS ONLY WHERE SEISMIC BRACKETS ARE ATTACHED TO THE ROD AND ROD LENGTH (L) EXCEEDS 18". REF. APPROPRIATE M10 PAGES FOR DETAIL.
3. PROVIDE (1) 1/2" DIA. CONNECTION IN CENTER HOLE WHEN STRUT BRACE IS INSTALLED INSIDE THE BRACKET AND (2) 1/2" DIA. CONNECTIONS IN (2) OUTER HOLES WHEN THE BRACE IS INSTALLED OUTSIDE OF THE BRACKET. REF. X2.3 FOR CONNECTION DETAILS.
4. MW-KY-38 (REF. X2.4) MUST BE USED ON TOP OF BOTTOM SHB WHEN STACKING (2) SHB ON THE SAME ROD.

OSHPD OPM-0043-13 REVIEWED FOR CODE COMPLIANCE BY: Jeffrey Y. Kikumoto DATE: 06/23/2016 CALIFORNIA BUILDING CODE, 2013

MASON WEST, INC.
1601 E. Miraloma Ave. Placentia, CA 92870
TEL (714) 630 - 0701, www.masonwest.com

Jiefu "Jeff" Zhang, SE
California SE No. S5270

HANGER ROD DIAMETER = ½"

ROUND DUCT TRANSVERSE SEISMIC SOLID BRACING SYSTEM 60 PLF MAX

KIT OPTIONS
TS12T
TS1220T
TSH412T
TSH420T

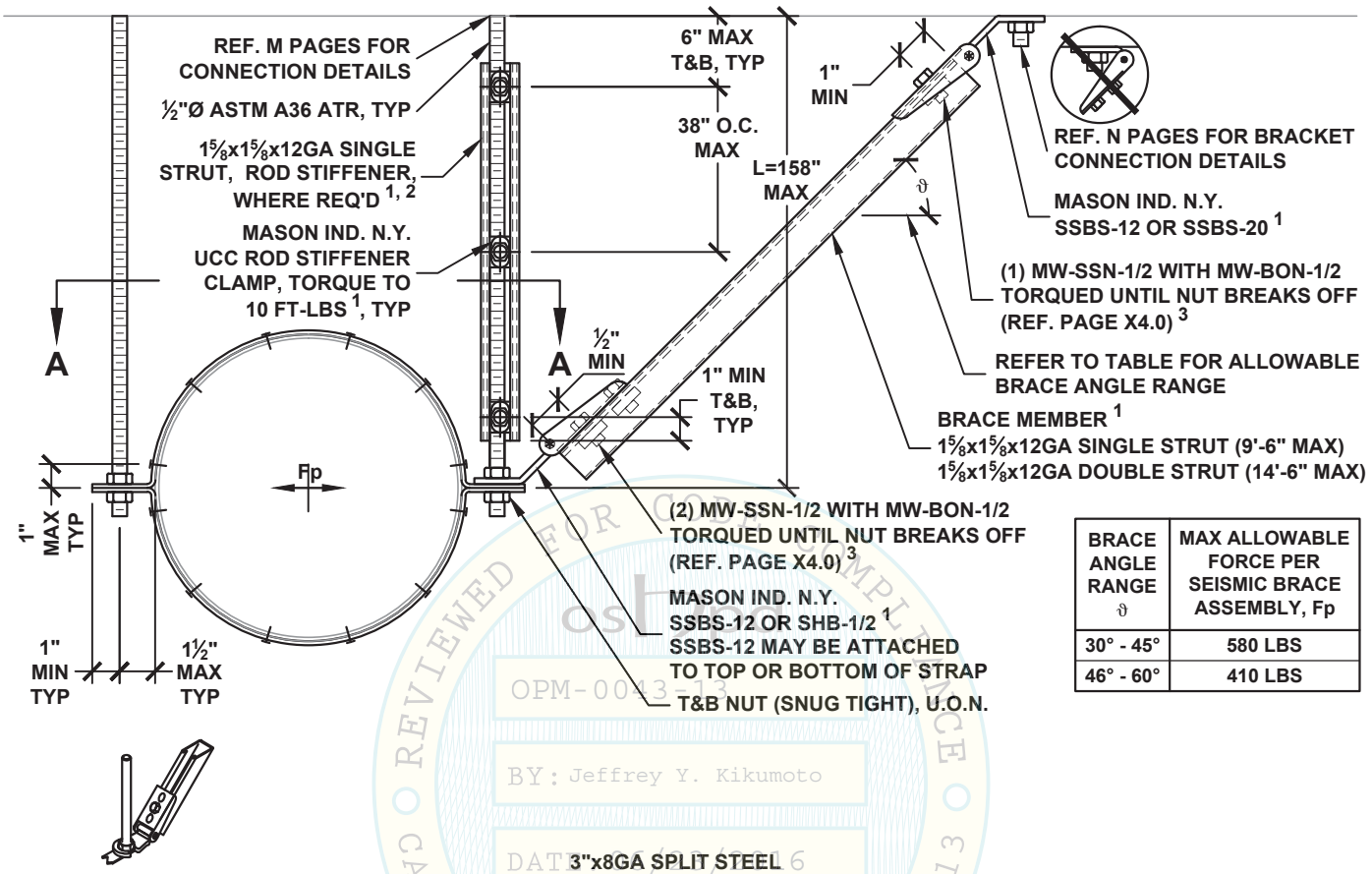

BRACE ANGLE RANGE ϑ	MAX ALLOWABLE FORCE PER SEISMIC BRACE ASSEMBLY, Fp
30° - 45°	580 LBS
46° - 60°	410 LBS

SHB OPTION

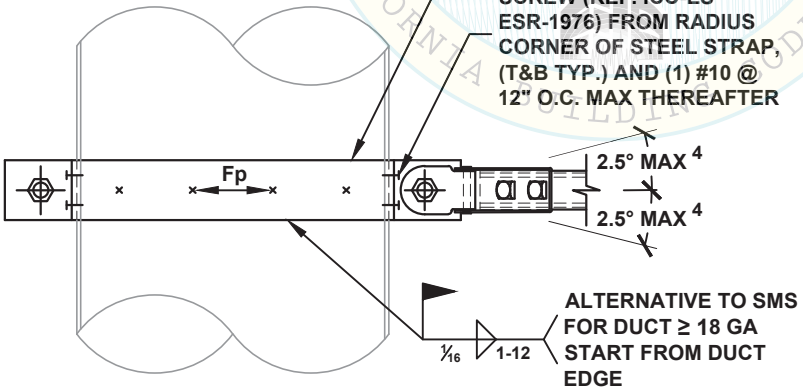

VIEW A-A

NOTES:

1. REF. SECTION A1 FOR GENERAL NOTES.
2. PROVIDE ROD STIFFENER ONLY WHERE SEISMIC BRACKET IS ATTACHED TO THE ROD AND ROD LENGTH (L) EXCEEDS 25". REF. APPROPRIATE M10 PAGES FOR DETAIL.
3. PROVIDE (1) 1/2" DIA. CONNECTION IN CENTER HOLE WHEN STRUT BRACE IS INSTALLED INSIDE THE BRACKET AND (2) 1/2" DIA. CONNECTIONS IN (2) OUTER HOLES WHEN THE BRACE IS INSTALLED OUTSIDE OF THE BRACKET. REF. X2.3 FOR CONNECTION DETAILS.
4. ANGLE MAY BE INCREASED UP TO 15°, REF. PAGE A5.0

OSHPD REVIEWED FOR CODE COMPLIANCE CALIFORNIA BUILDING CODE, 2013
OPM-0043-13
BY: Jeffrey Y. Kikumoto
DATE 6/23/2016

MASON WEST, INC.
1601 E. Miraloma Ave. Placentia, CA 92870
TEL (714) 630 - 0701, www.masonwest.com

Jiefu "Jeff" Zhang, SE
California SE No. S5270

PAGE
D2.20

HANGER ROD DIAMETER = ½"

ROUND DUCT LONGITUDINAL SEISMIC SOLID BRACING SYSTEM 60 PLF MAX

KIT OPTIONS
TS12L
TS1220L
TSH412L
TSH420L

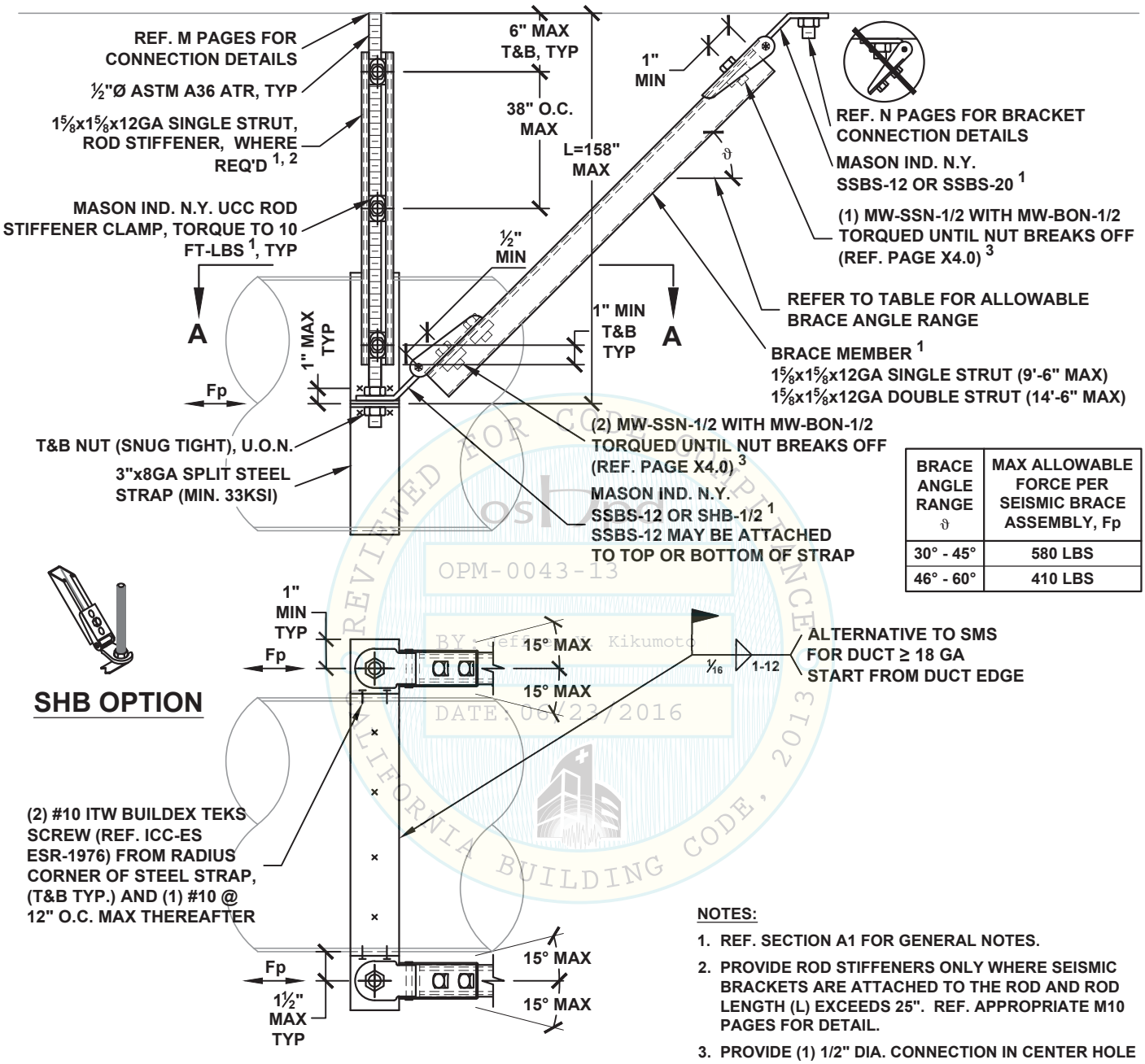

BRACE ANGLE RANGE ϑ	MAX ALLOWABLE FORCE PER SEISMIC BRACE ASSEMBLY, Fp
30° - 45°	580 LBS
46° - 60°	410 LBS

SHB OPTION

VIEW A-A

NOTES:

1. REF. SECTION A1 FOR GENERAL NOTES.
2. PROVIDE ROD STIFFENERS ONLY WHERE SEISMIC BRACKETS ARE ATTACHED TO THE ROD AND ROD LENGTH (L) EXCEEDS 25". REF. APPROPRIATE M10 PAGES FOR DETAIL.
3. PROVIDE (1) 1/2" DIA. CONNECTION IN CENTER HOLE WHEN STRUT BRACE IS INSTALLED INSIDE THE BRACKET AND (2) 1/2" DIA. CONNECTIONS IN (2) OUTER HOLES WHEN THE BRACE IS INSTALLED OUTSIDE OF THE BRACKET. REF. X2.3 FOR CONNECTION DETAILS.

REVIEWED FOR CODE COMPLIANCE
OSHPD
OPM-0043-13
BY: Jeffrey Kikumoto
DATE: 06/23/2016
CALIFORNIA BUILDING CODE, 2013

MASON WEST, INC.
1601 E. Miraloma Ave. Placentia, CA 92870
TEL (714) 630 - 0701, www.masonwest.com

Jiefu "Jeff" Zhang, SE
California SE No. S5270

HANGER ROD DIAMETER = ½"	ROUND DUCT ALL-DIRECTIONAL SEISMIC SOLID BRACING SYSTEM 60 PLF MAX	KIT OPTIONS TS12A TS1220A TSH412A TSH420A

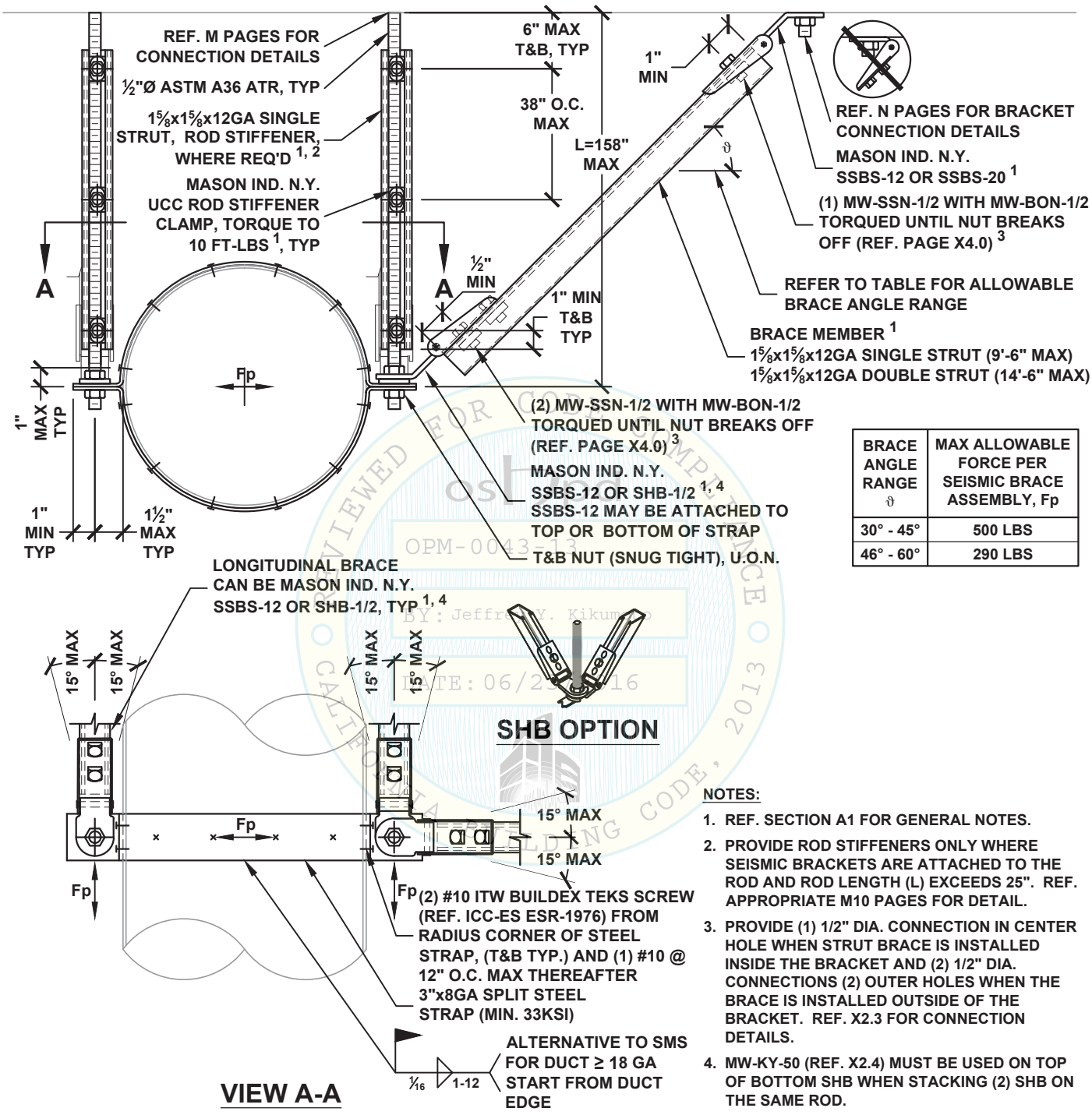

BRACE ANGLE RANGE ϑ	MAX ALLOWABLE FORCE PER SEISMIC BRACE ASSEMBLY, Fp
30° - 45°	500 LBS
46° - 60°	290 LBS

NOTES:

1. REF. SECTION A1 FOR GENERAL NOTES.
2. PROVIDE ROD STIFFENERS ONLY WHERE SEISMIC BRACKETS ARE ATTACHED TO THE ROD AND ROD LENGTH (L) EXCEEDS 25". REF. APPROPRIATE M10 PAGES FOR DETAIL.
3. PROVIDE (1) 1/2" DIA. CONNECTION IN CENTER HOLE WHEN STRUT BRACE IS INSTALLED INSIDE THE BRACKET AND (2) 1/2" DIA. CONNECTIONS (2) OUTER HOLES WHEN THE BRACE IS INSTALLED OUTSIDE OF THE BRACKET. REF. X2.3 FOR CONNECTION DETAILS.
4. MW-KY-50 (REF. X2.4) MUST BE USED ON TOP OF BOTTOM SHB WHEN STACKING (2) SHB ON THE SAME ROD.

OPM-0043-13 REVIEWED FOR CODE COMPLIANCE BY: Jeffrey Y. Kikumoto DATE: 06/23/2016 CALIFORNIA BUILDING CODE, 2013

MASON WEST, INC.
1601 E. Miraloma Ave. Placentia, CA 92870
TEL (714) 630 - 0701, www.masonwest.com

Jiefu "Jeff" Zhang, SE
California SE No. S5270

PAGE
D2.22

HANGER ROD DIAMETER = 5/8"	ROUND DUCT TRANSVERSE SEISMIC SOLID BRACING SYSTEM 60 PLF MAX	KIT OPTIONS TSH5T

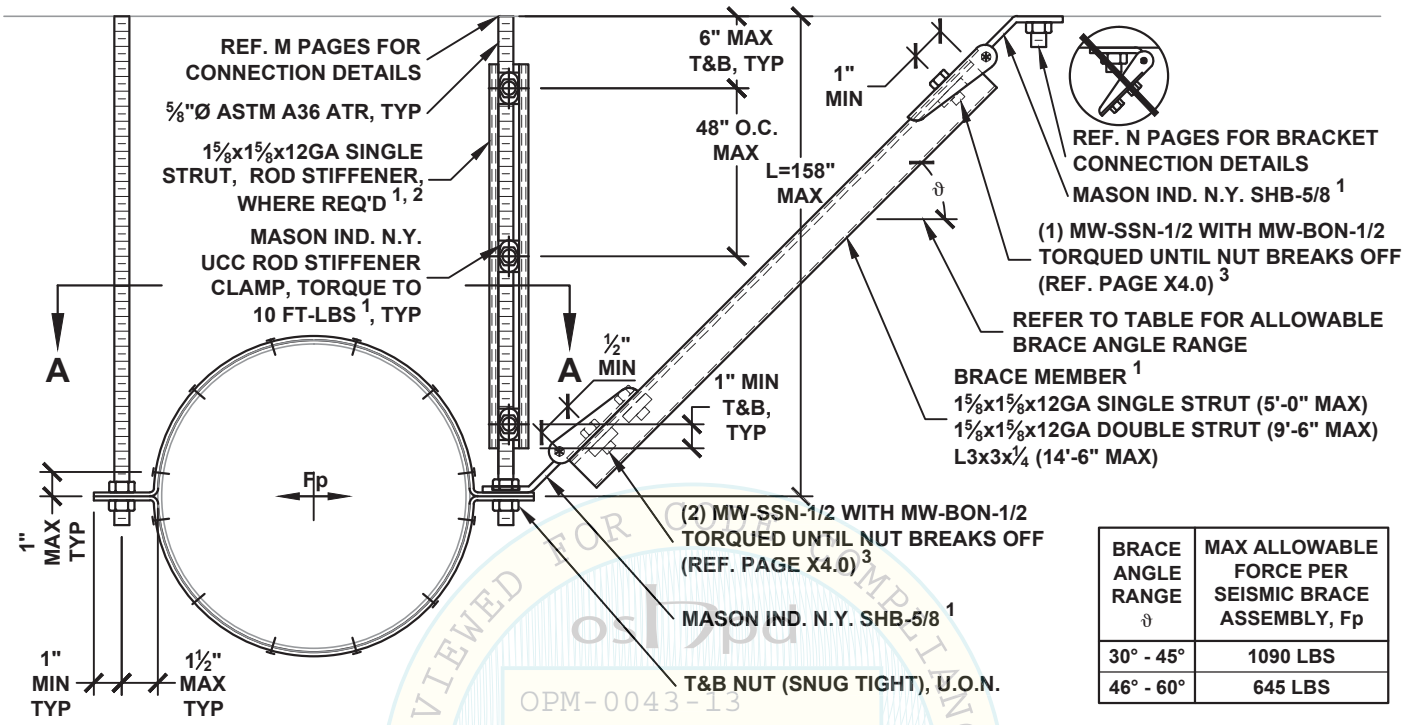

BRACE ANGLE RANGE ϑ	MAX ALLOWABLE FORCE PER SEISMIC BRACE ASSEMBLY, Fp
30° - 45°	1090 LBS
46° - 60°	645 LBS

REVIEWED FOR CODE COMPLIANCE
OSHPD
OPM-0043-13
BY: Jeffrey Y. Kikumoto
DATE: 06/23/2016
CALIFORNIA BUILDING CODE, 2013

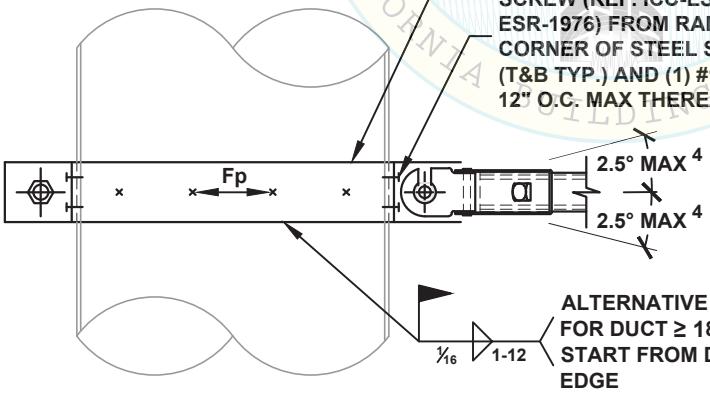

VIEW A-A

NOTES:

1. REF. SECTION A1 FOR GENERAL NOTES.
2. PROVIDE ROD STIFFENER ONLY WHERE SEISMIC BRACKET IS ATTACHED TO THE ROD AND ROD LENGTH (L) EXCEEDS 31". REF. APPROPRIATE M10 PAGES FOR DETAIL.
3. PROVIDE (1) 1/2" DIA. CONNECTION IN CENTER HOLE WHEN STRUT BRACE IS INSTALLED INSIDE THE BRACKET AND (2) 1/2" DIA. CONNECTIONS IN (2) OUTER HOLES WHEN THE BRACE IS INSTALLED OUTSIDE OF THE BRACKET. REF. X2.3 FOR CONNECTION DETAILS.
4. ANGLE MAY BE INCREASED UP TO 15°, REF. PAGE A5.0

MASON WEST, INC.
1601 E. Miraloma Ave. Placentia, CA 92870
TEL (714) 630 - 0701, www.masonwest.com

Jiefu "Jeff" Zhang, SE
California SE No. S5270

PAGE
D2.30

HANGER ROD DIAMETER = 5/8"	ROUND DUCT LONGITUDINAL SEISMIC SOLID BRACING SYSTEM 60 PLF MAX	KIT OPTIONS TSH5L

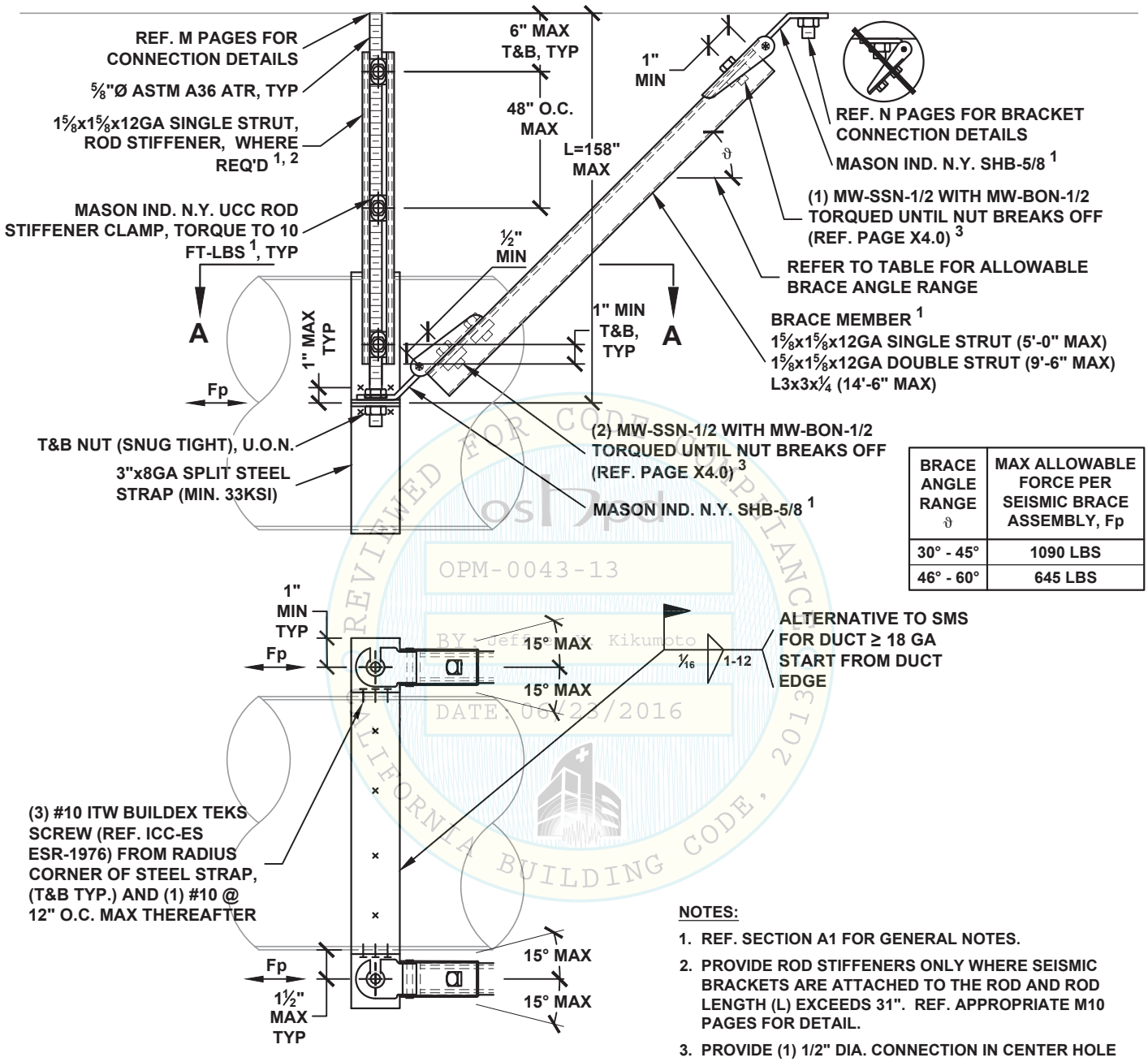

BRACE ANGLE RANGE ϑ	MAX ALLOWABLE FORCE PER SEISMIC BRACE ASSEMBLY, Fp
30° - 45°	1090 LBS
46° - 60°	645 LBS

REVIEWED FOR CODE COMPLIANCE
OSHPD
OPM-0043-13
BY: Jeffrey Kikumoto
DATE: 06/23/2016
CALIFORNIA BUILDING CODE, 2013

VIEW A-A

NOTES:

1. REF. SECTION A1 FOR GENERAL NOTES.
2. PROVIDE ROD STIFFENERS ONLY WHERE SEISMIC BRACKETS ARE ATTACHED TO THE ROD AND ROD LENGTH (L) EXCEEDS 31". REF. APPROPRIATE M10 PAGES FOR DETAIL.
3. PROVIDE (1) 1/2" DIA. CONNECTION IN CENTER HOLE WHEN STRUT BRACE IS INSTALLED INSIDE THE BRACKET AND (2) 1/2" DIA. CONNECTIONS IN (2) OUTER HOLES WHEN THE BRACE IS INSTALLED OUTSIDE OF THE BRACKET. REF. X2.3 FOR CONNECTION DETAILS.

MASON WEST, INC.
1601 E. Miraloma Ave. Placentia, CA 92870
TEL (714) 630 - 0701, www.masonwest.com

Jiefu "Jeff" Zhang, SE
California SE No. S5270

PAGE
D2.31

HANGER ROD DIAMETER = 5/8"	ROUND DUCT ALL-DIRECTIONAL SEISMIC SOLID BRACING SYSTEM 60 PLF MAX	KIT OPTIONS TSH5A

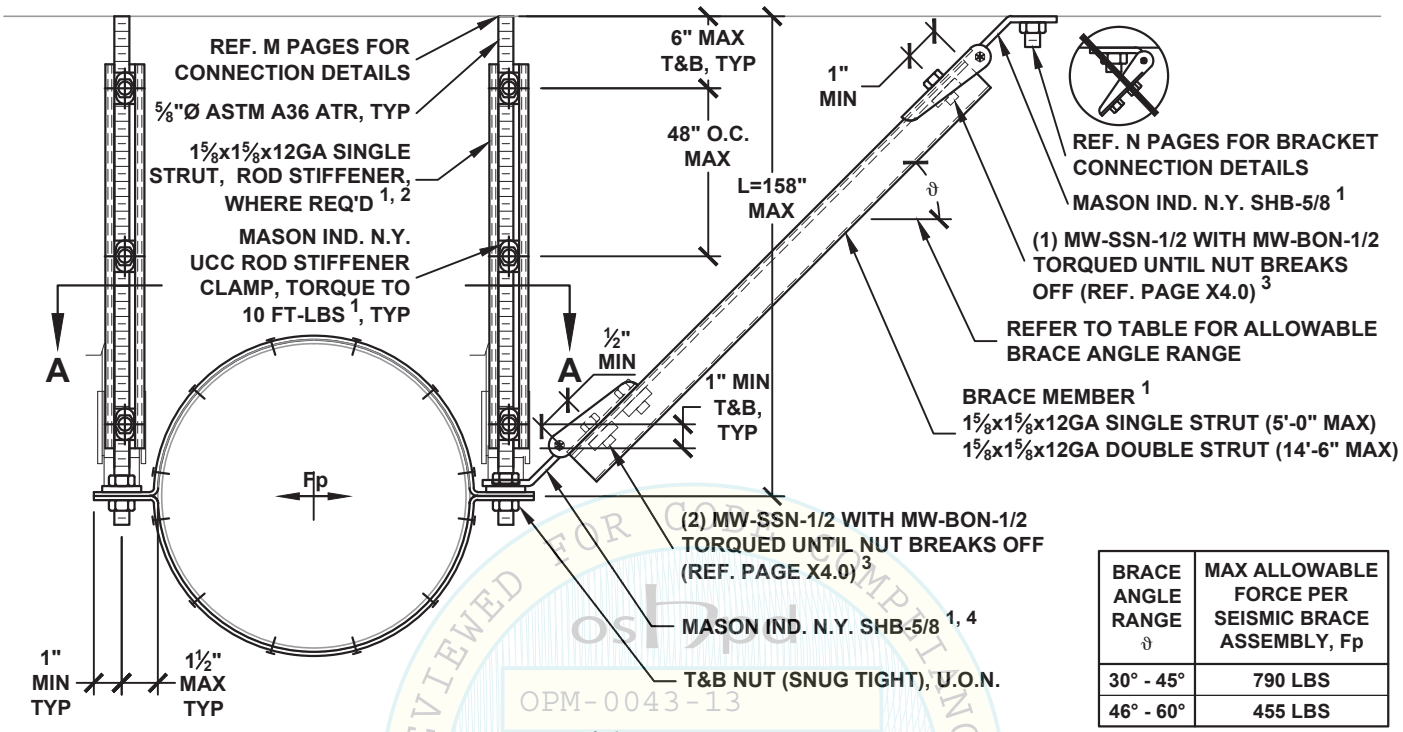

BRACE ANGLE RANGE ϑ	MAX ALLOWABLE FORCE PER SEISMIC BRACE ASSEMBLY, Fp
30° - 45°	790 LBS
46° - 60°	455 LBS

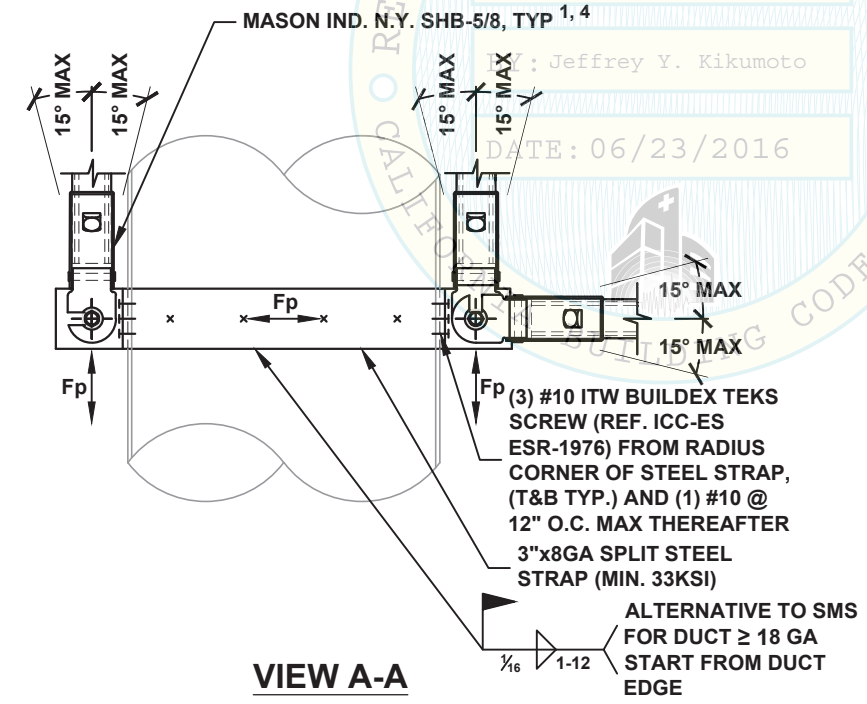

VIEW A-A

OSHPD
OPM-0043-13
BY: Jeffrey Y. Kikumoto
DATE: 06/23/2016
REVIEWED FOR CODE COMPLIANCE
CALIFORNIA BUILDING CODE, 2013

NOTES:

1. REF. SECTION A1 FOR GENERAL NOTES.
2. PROVIDE ROD STIFFENERS ONLY WHERE SEISMIC BRACKETS ARE ATTACHED TO THE ROD AND ROD LENGTH (L) EXCEEDS 31". REF. APPROPRIATE M10 PAGES FOR DETAIL.
3. PROVIDE (1) 1/2" DIA. CONNECTION IN CENTER HOLE WHEN STRUT BRACE IS INSTALLED INSIDE THE BRACKET AND (2) 1/2" DIA. CONNECTIONS (2) OUTER HOLES WHEN THE BRACE IS INSTALLED OUTSIDE OF THE BRACKET. REF. X2.3 FOR CONNECTION DETAILS.
4. MW-KY-63 (REF. X2.4) MUST BE USED ON TOP OF BOTTOM SHB WHEN STACKING (2) SHB ON THE SAME ROD.

MASON WEST, INC.
1601 E. Miraloma Ave. Placentia, CA 92870
TEL (714) 630 - 0701, www.masonwest.com

Jiefu "Jeff" Zhang, SE
California SE No. S5270

PAGE
D2.32

HANGER ROD DIAMETER = ⅜"

FACTORY BUILT VENT DUCT TRANSVERSE SEISMIC SOLID BRACING SYSTEM 30 PLF MAX

KIT OPTIONS
TS12T
TS1220T
TSH312T
TSH320T

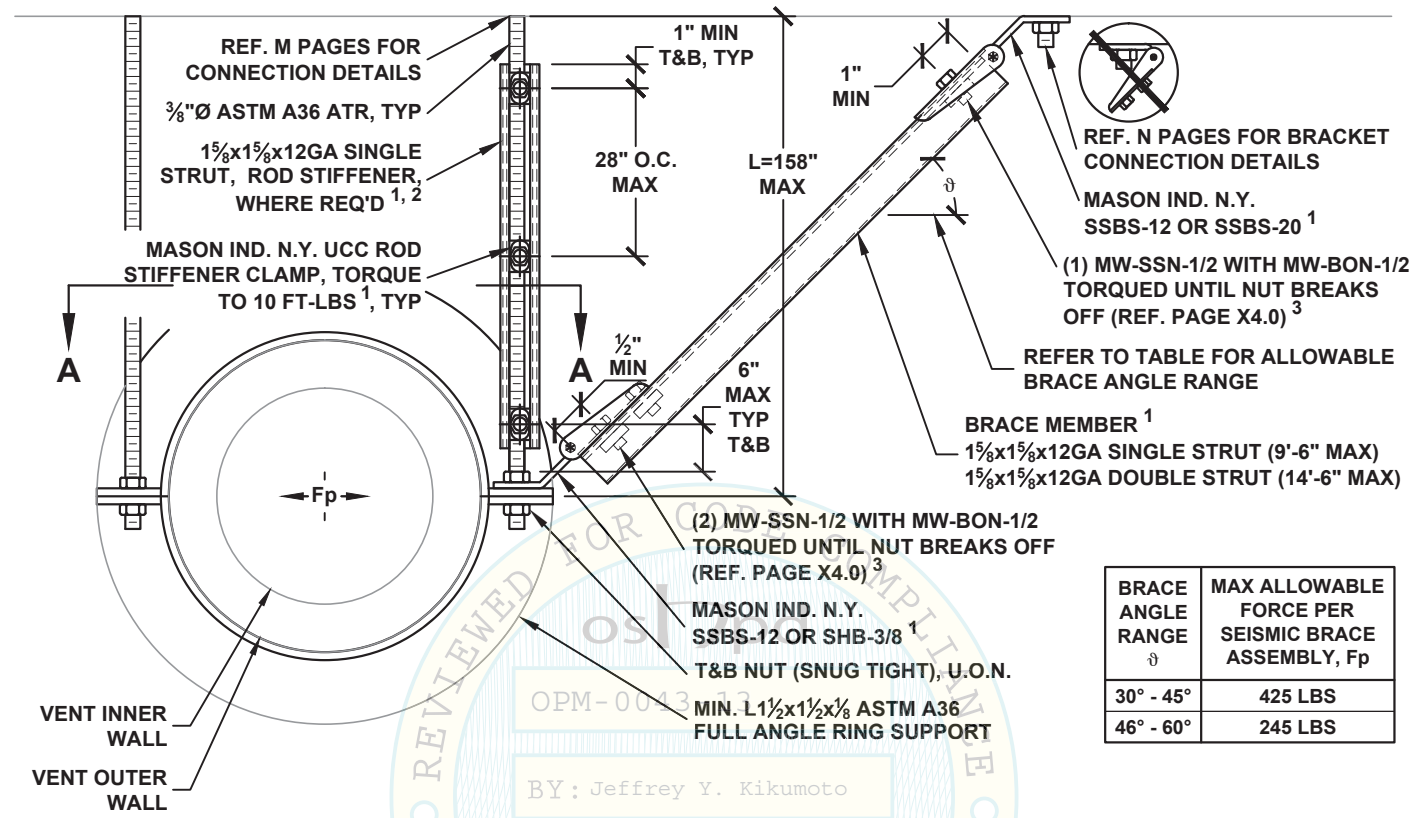

BRACE ANGLE RANGE ϑ	MAX ALLOWABLE FORCE PER SEISMIC BRACE ASSEMBLY, Fp
30° - 45°	425 LBS
46° - 60°	245 LBS

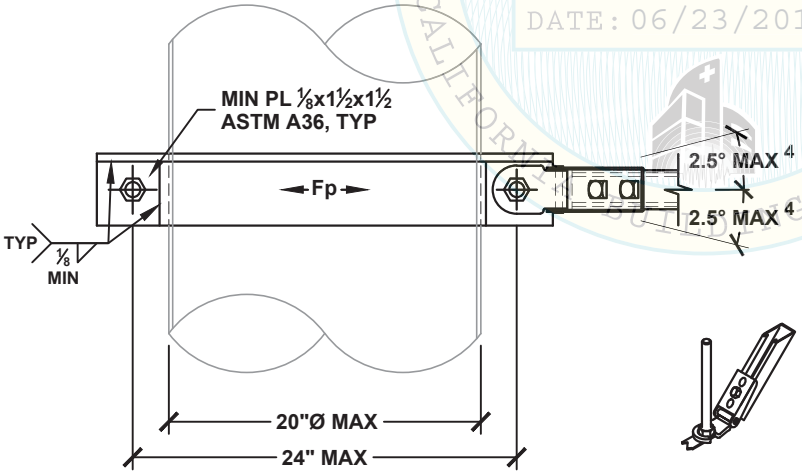

VIEW A-A

SHB OPTION

NOTES:

1. REF. SECTION A1 FOR GENERAL NOTES.
2. PROVIDE ROD STIFFENER ONLY WHERE SEISMIC BRACKET IS ATTACHED TO THE ROD AND ROD LENGTH (L) EXCEEDS 18". REF. APPROPRIATE M10 PAGES FOR DETAIL.
3. PROVIDE (1) 1/2" DIA. CONNECTION IN CENTER HOLE WHEN STRUT BRACE IS INSTALLED INSIDE THE BRACKET AND (2) 1/2" DIA. CONNECTIONS IN (2) OUTER HOLES WHEN THE BRACE IS INSTALLED OUTSIDE OF THE BRACKET. REF. X2.3 FOR CONNECTION DETAILS.
4. ANGLE MAY BE INCREASED UP TO 15°, REF. PAGE A5.0.

REVIEWED FOR CODE COMPLIANCE
OSHPD
OPM-0043-13
BY: Jeffrey Y. Kikumoto
DATE: 06/23/2016
CALIFORNIA BUILDING CODE, 2013

MASON WEST, INC.
1601 E. Miraloma Ave. Placentia, CA 92870
TEL (714) 630 - 0701, www.masonwest.com

Jiefu "Jeff" Zhang, SE
California SE No. S5270

PAGE
D3.10

HANGER ROD DIAMETER = ⅜"

FACTORY BUILT VENT DUCT LONGITUDINAL SEISMIC SOLID BRACING SYSTEM 30 PLF MAX

KIT OPTIONS
TS12L
TS1220L
TSH312L
TSH320L

SHB OPTION

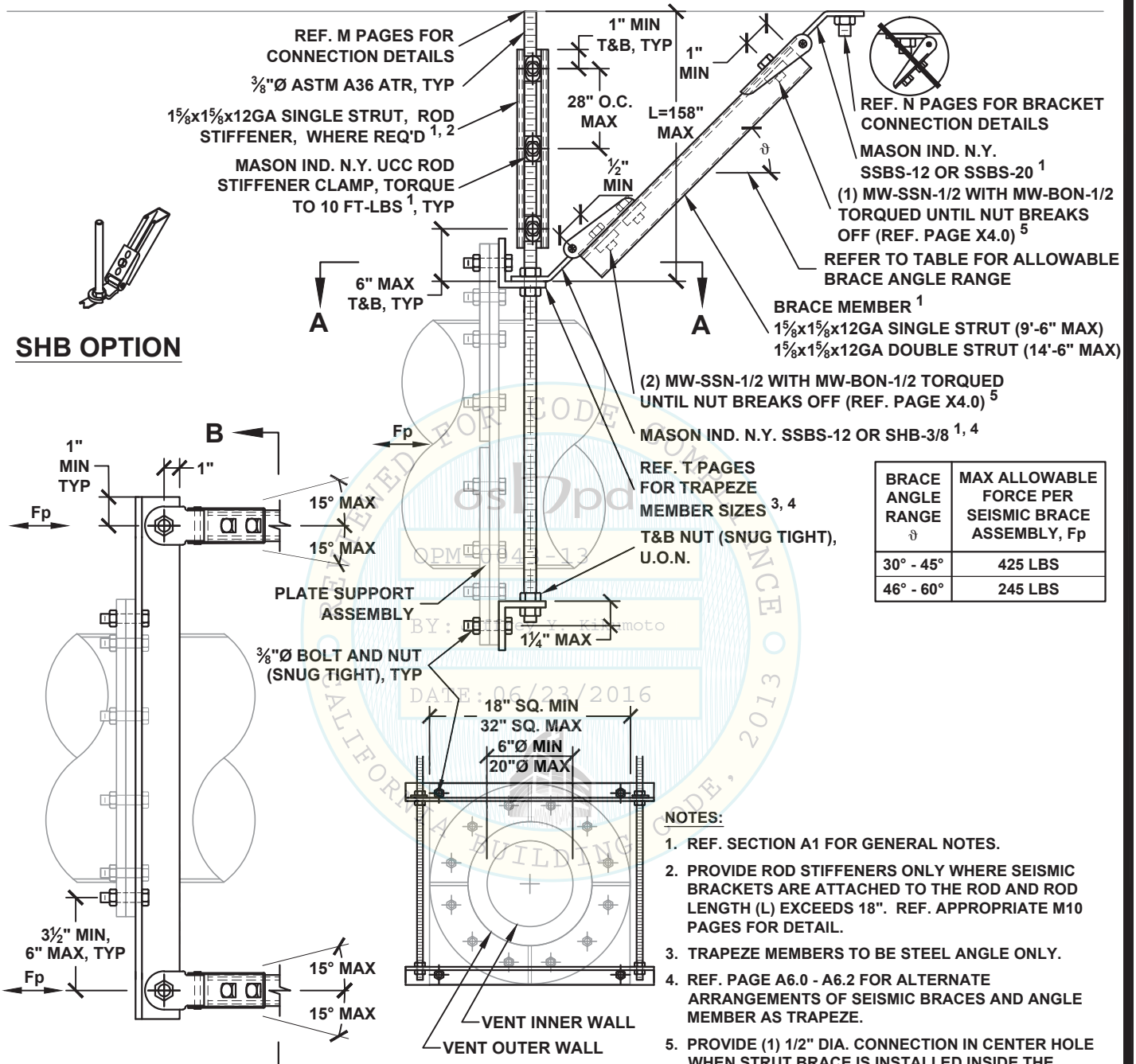

BRACE ANGLE RANGE ϑ	MAX ALLOWABLE FORCE PER SEISMIC BRACE ASSEMBLY, Fp
30° - 45°	425 LBS
46° - 60°	245 LBS

VIEW A-A

VIEW B-B

NOTES:

1. REF. SECTION A1 FOR GENERAL NOTES.
2. PROVIDE ROD STIFFENERS ONLY WHERE SEISMIC BRACKETS ARE ATTACHED TO THE ROD AND ROD LENGTH (L) EXCEEDS 18". REF. APPROPRIATE M10 PAGES FOR DETAIL.
3. TRAPEZE MEMBERS TO BE STEEL ANGLE ONLY.
4. REF. PAGE A6.0 - A6.2 FOR ALTERNATE ARRANGEMENTS OF SEISMIC BRACES AND ANGLE MEMBER AS TRAPEZE.
5. PROVIDE (1) 1/2" DIA. CONNECTION IN CENTER HOLE WHEN STRUT BRACE IS INSTALLED INSIDE THE BRACKET AND (2) 1/2" DIA. CONNECTIONS IN (2) OUTER HOLES WHEN THE BRACE IS INSTALLED OUTSIDE OF THE BRACKET. REF. X2.3 FOR CONNECTION DETAILS.

REVIEWED FOR CODE COMPLIANCE
OSHPD
OPM-0043-13
BY: Jeffrey Kikumoto
DATE: 06/23/2016
CALIFORNIA BUILDING CODE, 2013

MASON WEST, INC.
1601 E. Miraloma Ave. Placentia, CA 92870
TEL (714) 630 - 0701, www.masonwest.com

Jiefu "Jeff" Zhang, SE
California SE No. S5270

PAGE
D3.11

HANGER ROD DIAMETER = 3/8"	FACTORY BUILT VENT DUCT ALL-DIRECTIONAL SEISMIC SOLID BRACING SYSTEM 30 PLF MAX	KIT OPTIONS TS12A TS1220A TSH312A TSH320A

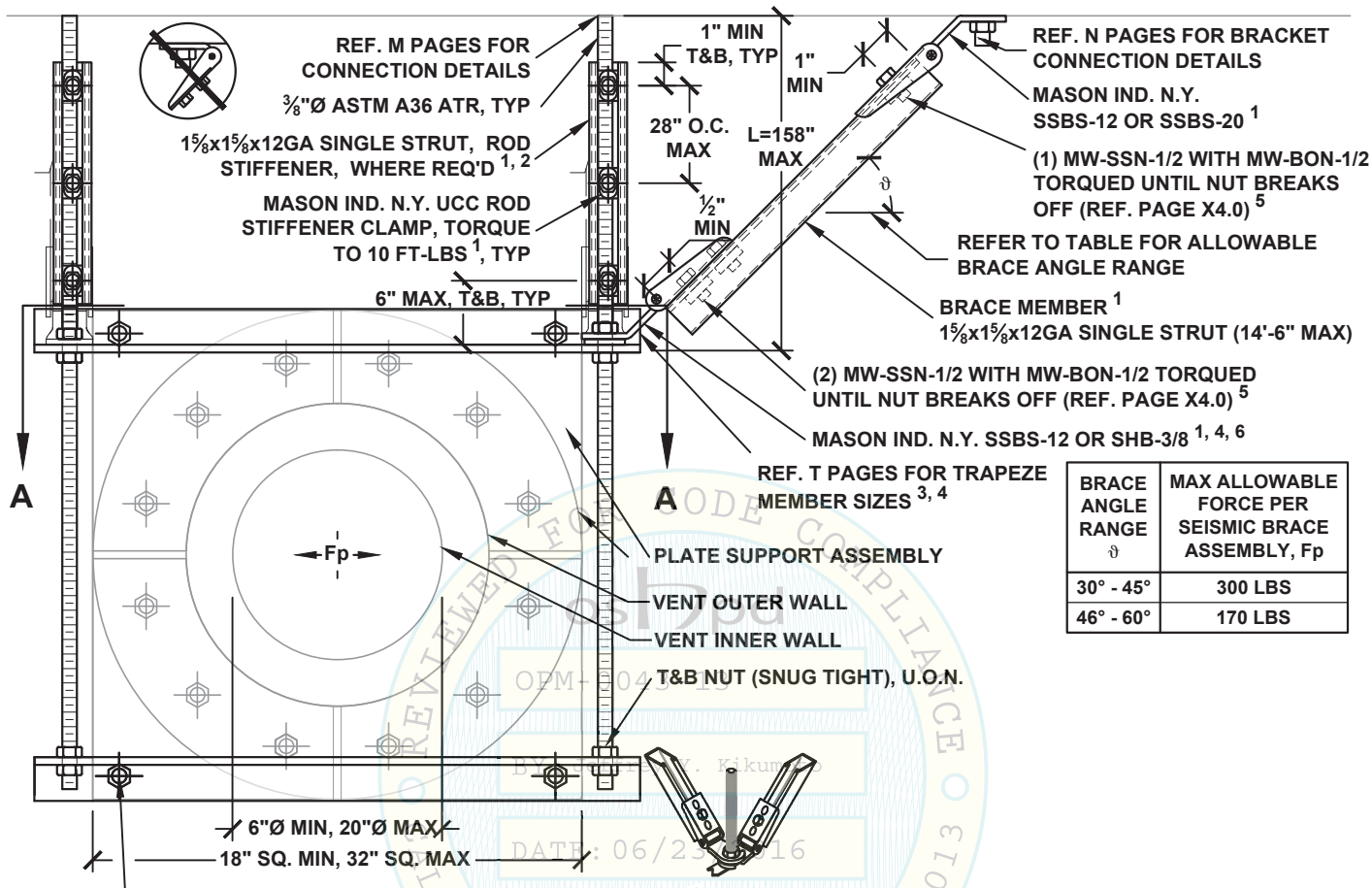

BRACE ANGLE RANGE ϑ	MAX ALLOWABLE FORCE PER SEISMIC BRACE ASSEMBLY, Fp
30° - 45°	300 LBS
46° - 60°	170 LBS

SHB OPTION

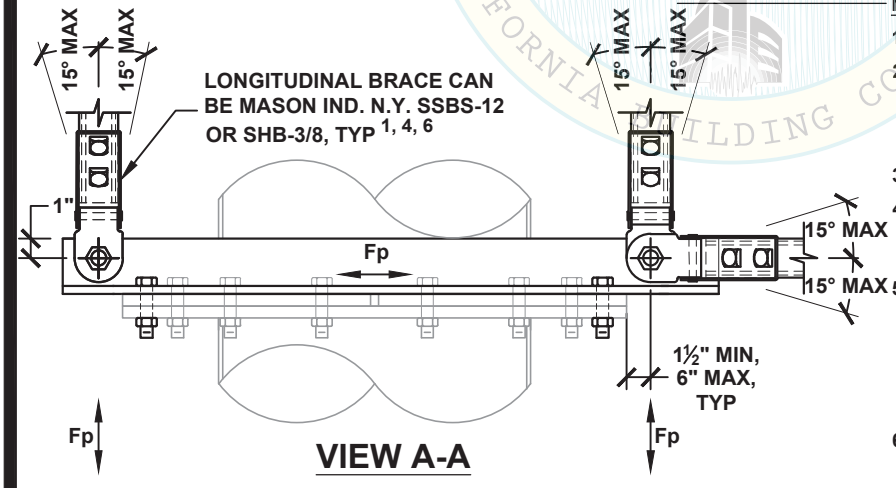

VIEW A-A

NOTES:

1. REF. SECTION A1 FOR GENERAL NOTES.
2. PROVIDE ROD STIFFENERS ONLY WHERE SEISMIC BRACKETS ARE ATTACHED TO THE ROD AND ROD LENGTH (L) EXCEEDS 18". REF. APPROPRIATE M10 PAGES FOR DETAIL.
3. TRAPEZE MEMBERS TO BE STEEL ANGLE ONLY.
4. REF. PAGE A6.0 - A6.2 FOR ALTERNATE ARRANGEMENTS OF SEISMIC BRACES AND ANGLE MEMBER AS TRAPEZE.
5. PROVIDE (1) 1/2" DIA. CONNECTION IN CENTER HOLE WHEN STRUT BRACE IS INSTALLED INSIDE THE BRACKET AND (2) 1/2" DIA. CONNECTIONS IN (2) OUTER HOLES WHEN THE BRACE IS INSTALLED OUTSIDE OF THE BRACKET. REF. X2.3 FOR CONNECTION DETAILS.
6. MW-KY-38 (REF. X2.4) MUST BE USED ON TOP OF BOTTOM SHB WHEN STACKING (2) SHB ON THE SAME ROD.

REVIEWED FOR CODE COMPLIANCE
OSHPD
OPM-0043-13
BY: Jeffrey Kikumoto
DATE: 06/23/2016
CALIFORNIA BUILDING CODE 2013

MASON WEST, INC.
1601 E. Miraloma Ave. Placentia, CA 92870
TEL (714) 630 - 0701, www.masonwest.com

Jiefu "Jeff" Zhang, SE
California SE No. S5270

PAGE
D3.12

HANGER ROD DIAMETER = ½"

FACTORY BUILT VENT DUCT TRANSVERSE SEISMIC SOLID BRACING SYSTEM 60 PLF MAX

KIT OPTIONS
TSH4T

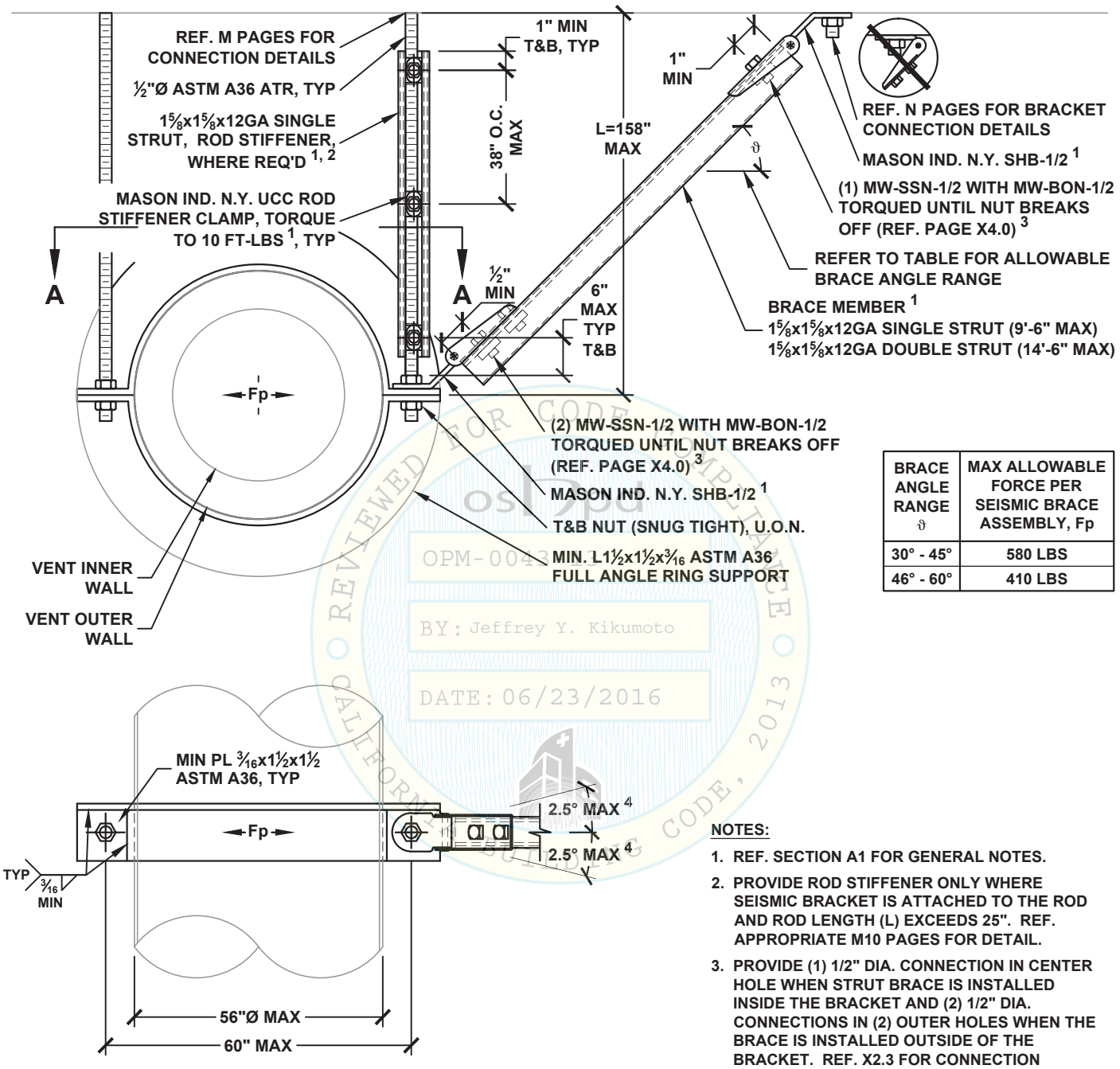

BRACE ANGLE RANGE ϑ	MAX ALLOWABLE FORCE PER SEISMIC BRACE ASSEMBLY, Fp
30° - 45°	580 LBS
46° - 60°	410 LBS

VIEW A-A

NOTES:

1. REF. SECTION A1 FOR GENERAL NOTES.
2. PROVIDE ROD STIFFENER ONLY WHERE SEISMIC BRACKET IS ATTACHED TO THE ROD AND ROD LENGTH (L) EXCEEDS 25". REF. APPROPRIATE M10 PAGES FOR DETAIL.
3. PROVIDE (1) 1/2" DIA. CONNECTION IN CENTER HOLE WHEN STRUT BRACE IS INSTALLED INSIDE THE BRACKET AND (2) 1/2" DIA. CONNECTIONS IN (2) OUTER HOLES WHEN THE BRACE IS INSTALLED OUTSIDE OF THE BRACKET. REF. X2.3 FOR CONNECTION DETAILS.
4. ANGLE MAY BE INCREASED UP TO 15°, REF. PAGE A5.0.

OSHPD
OPM-0043-13
BY: Jeffrey Y. Kikumoto
DATE: 06/23/2016
REVIEWED FOR CODE COMPLIANCE
CALIFORNIA BUILDING CODE, 2013

MASON WEST, INC.
1601 E. Miraloma Ave. Placentia, CA 92870
TEL (714) 630 - 0701, www.masonwest.com

Jiefu "Jeff" Zhang, SE
California SE No. S5270

HANGER ROD DIAMETER = ½"	FACTORY BUILT VENT DUCT LONGITUDINAL SEISMIC SOLID BRACING SYSTEM 60 PLF MAX	KIT OPTIONS TSH4L

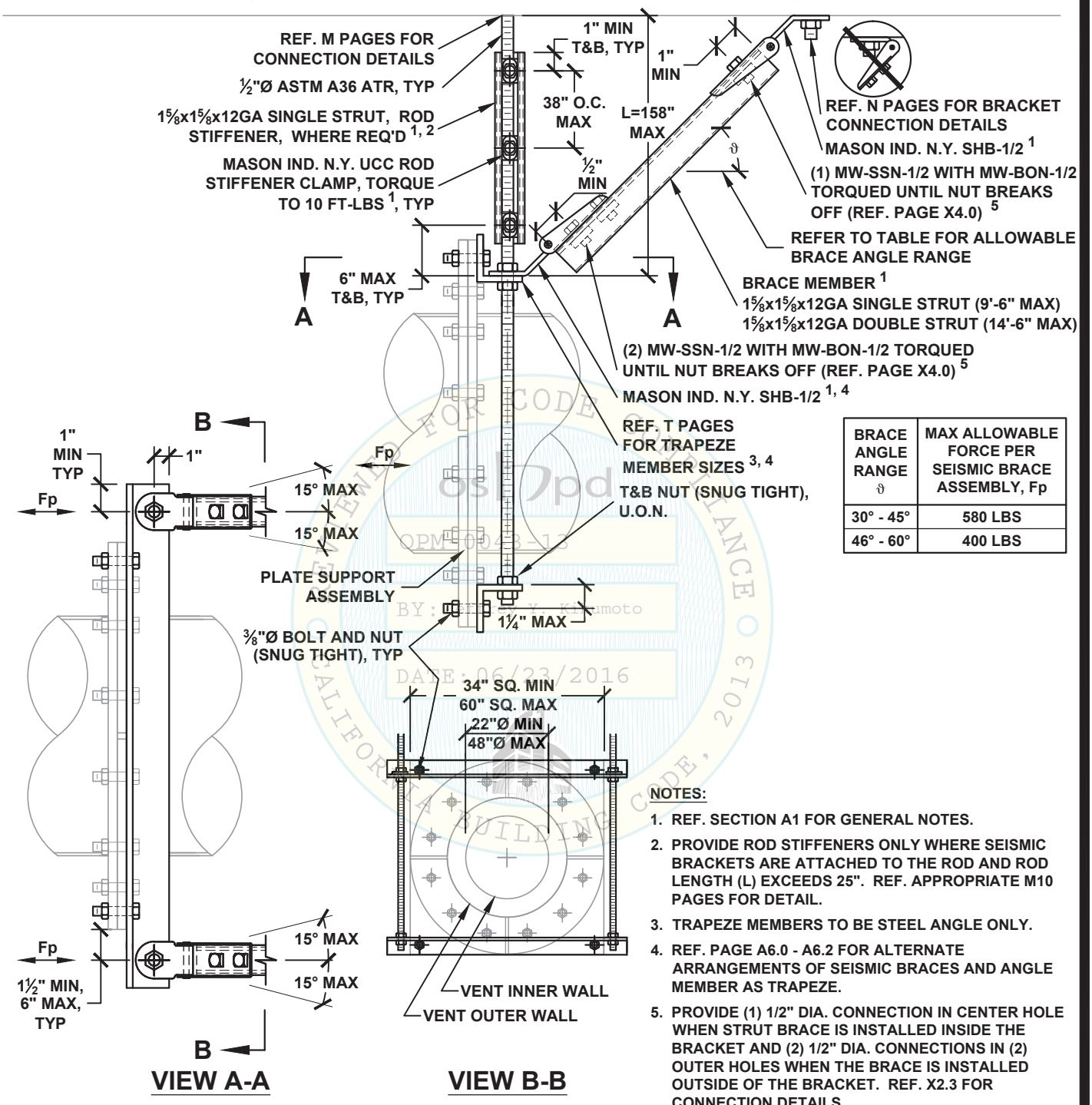

BRACE ANGLE RANGE ϑ	MAX ALLOWABLE FORCE PER SEISMIC BRACE ASSEMBLY, Fp
30° - 45°	580 LBS
46° - 60°	400 LBS

NOTES:

1. REF. SECTION A1 FOR GENERAL NOTES.
2. PROVIDE ROD STIFFENERS ONLY WHERE SEISMIC BRACKETS ARE ATTACHED TO THE ROD AND ROD LENGTH (L) EXCEEDS 25". REF. APPROPRIATE M10 PAGES FOR DETAIL.
3. TRAPEZE MEMBERS TO BE STEEL ANGLE ONLY.
4. REF. PAGE A6.0 - A6.2 FOR ALTERNATE ARRANGEMENTS OF SEISMIC BRACES AND ANGLE MEMBER AS TRAPEZE.
5. PROVIDE (1) 1/2" DIA. CONNECTION IN CENTER HOLE WHEN STRUT BRACE IS INSTALLED INSIDE THE BRACKET AND (2) 1/2" DIA. CONNECTIONS IN (2) OUTER HOLES WHEN THE BRACE IS INSTALLED OUTSIDE OF THE BRACKET. REF. X2.3 FOR CONNECTION DETAILS.

OPM-0043-13
BY: Jeffrey Kikumoto
DATE: 06/23/2016

MASON WEST, INC.
1601 E. Miraloma Ave. Placentia, CA 92870
TEL (714) 630 - 0701, www.masonwest.com

Jiefu "Jeff" Zhang, SE
California SE No. S5270

HANGER ROD DIAMETER = ½"

FACTORY BUILT VENT DUCT ALL-DIRECTIONAL SEISMIC SOLID BRACING SYSTEM 60 PLF MAX

KIT OPTIONS
TSH4A

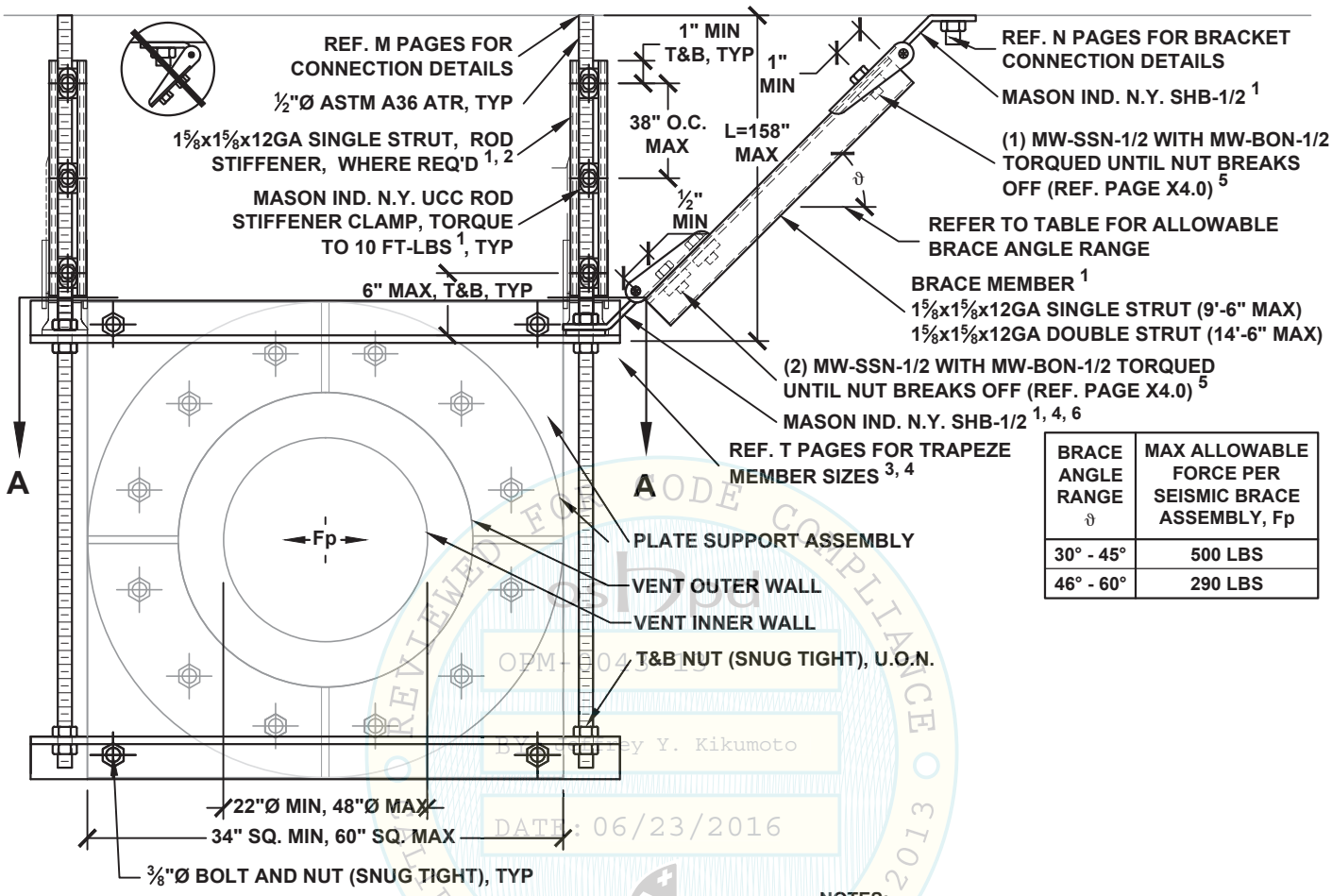

BRACE ANGLE RANGE ϑ	MAX ALLOWABLE FORCE PER SEISMIC BRACE ASSEMBLY, Fp
30° - 45°	500 LBS
46° - 60°	290 LBS

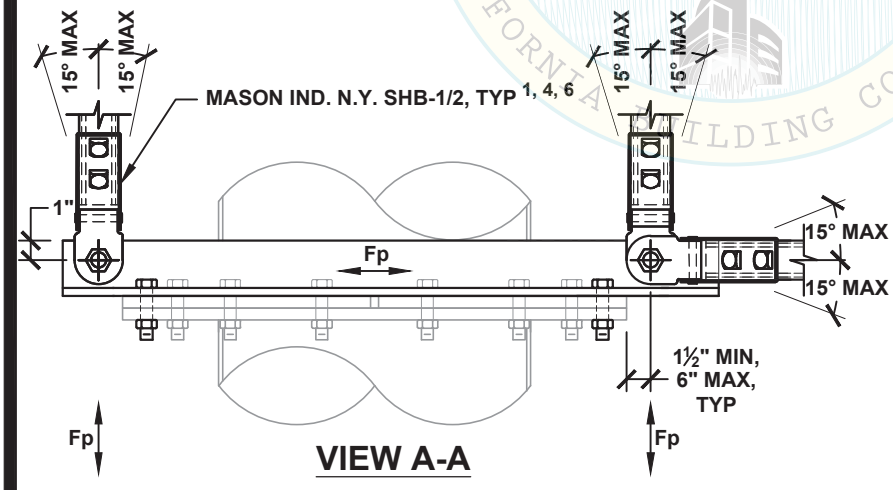

VIEW A-A

NOTES:

1. REF. SECTION A1 FOR GENERAL NOTES.
2. PROVIDE ROD STIFFENERS ONLY WHERE SEISMIC BRACKETS ARE ATTACHED TO THE ROD AND ROD LENGTH (L) EXCEEDS 25". REF. APPROPRIATE M10 PAGES FOR DETAIL.
3. TRAPEZE MEMBERS TO BE STEEL ANGLE ONLY.
4. REF. PAGE A6.0 - A6.2 FOR ALTERNATE ARRANGEMENTS OF SEISMIC BRACES AND ANGLE MEMBER AS TRAPEZE.
5. PROVIDE (1) 1/2" DIA. CONNECTION IN CENTER HOLE WHEN STRUT BRACE IS INSTALLED INSIDE THE BRACKET AND (2) 1/2" DIA. CONNECTIONS IN (2) OUTER HOLES WHEN THE BRACE IS INSTALLED OUTSIDE OF THE BRACKET. REF. X2.3 FOR CONNECTION DETAILS.
6. MW-KY-50 (REF. X2.4) MUST BE USED ON TOP OF BOTTOM SHB WHEN STACKING (2) SHB ON THE SAME ROD.

REVIEWED FOR CODE COMPLIANCE
OSHPD
OPM-0043-13
BY: Jeffrey Y. Kikumoto
DATE: 06/23/2016
CALIFORNIA BUILDING CODE 2013

MASON WEST, INC.
1601 E. Miraloma Ave. Placentia, CA 92870
TEL (714) 630 - 0701, www.masonwest.com

Jiefu "Jeff" Zhang, SE
California SE No. S5270

PAGE
D3.22

HANGER ROD DIAMETER = 3/8"	RECTANGULAR DUCT TRANSVERSE SEISMIC CABLE BRACING SYSTEM 30 PLF MAX	KIT OPTIONS TC0T

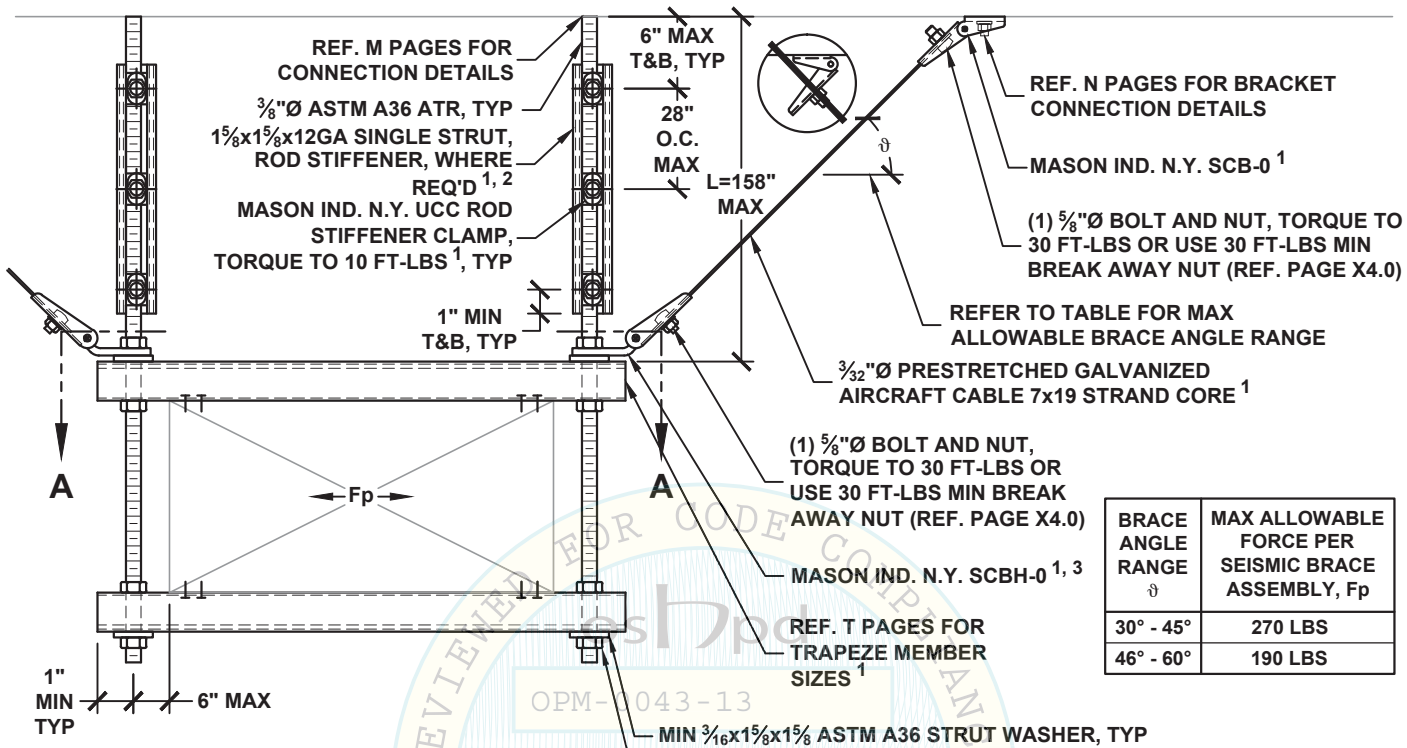

BRACE ANGLE RANGE ϑ	MAX ALLOWABLE FORCE PER SEISMIC BRACE ASSEMBLY, Fp
30° - 45°	270 LBS
46° - 60°	190 LBS

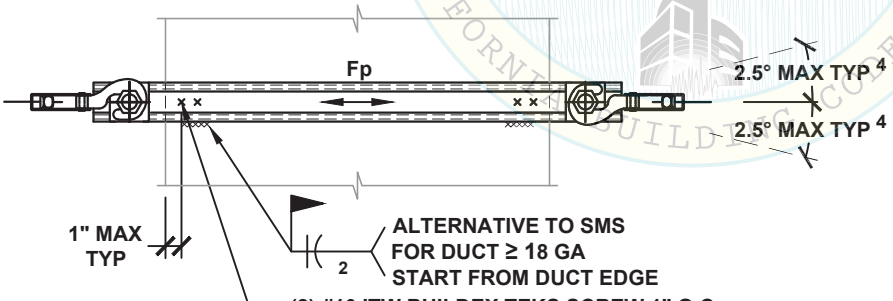

VIEW A-A

NOTES:

1. REF. SECTION A1 FOR GENERAL NOTES.
2. PROVIDE ROD STIFFENERS ONLY WHERE SEISMIC BRACKETS ARE ATTACHED TO THE ROD AND ROD LENGTH (L) EXCEEDS 18". REF. APPROPRIATE M10 PAGES FOR DETAIL.
3. REF. PAGE A6.0 - A6.2 FOR ALTERNATE ARRANGEMENTS OF SEISMIC BRACES AND ANGLE OR HSS MEMBER AS TRAPEZE.
4. ANGLE MAY BE INCREASED TO 15°, REF. PAGE A5.0.

REVIEWED FOR CODE COMPLIANCE CALIFORNIA BUILDING CODE, 2013
OPM-0043-13
BY: Jeffrey T. Kikumoto
DATE: 06/23/2016

MASON WEST, INC.
1601 E. Miraloma Ave. Placentia, CA 92870
TEL (714) 630 - 0701, www.masonwest.com

Jiefu "Jeff" Zhang, SE
California SE No. S5270

PAGE
D4.10

HANGER ROD DIAMETER = 3/8"	RECTANGULAR DUCT LONGITUDINAL SEISMIC CABLE BRACING SYSTEM 30 PLF MAX	KIT OPTIONS TC0L

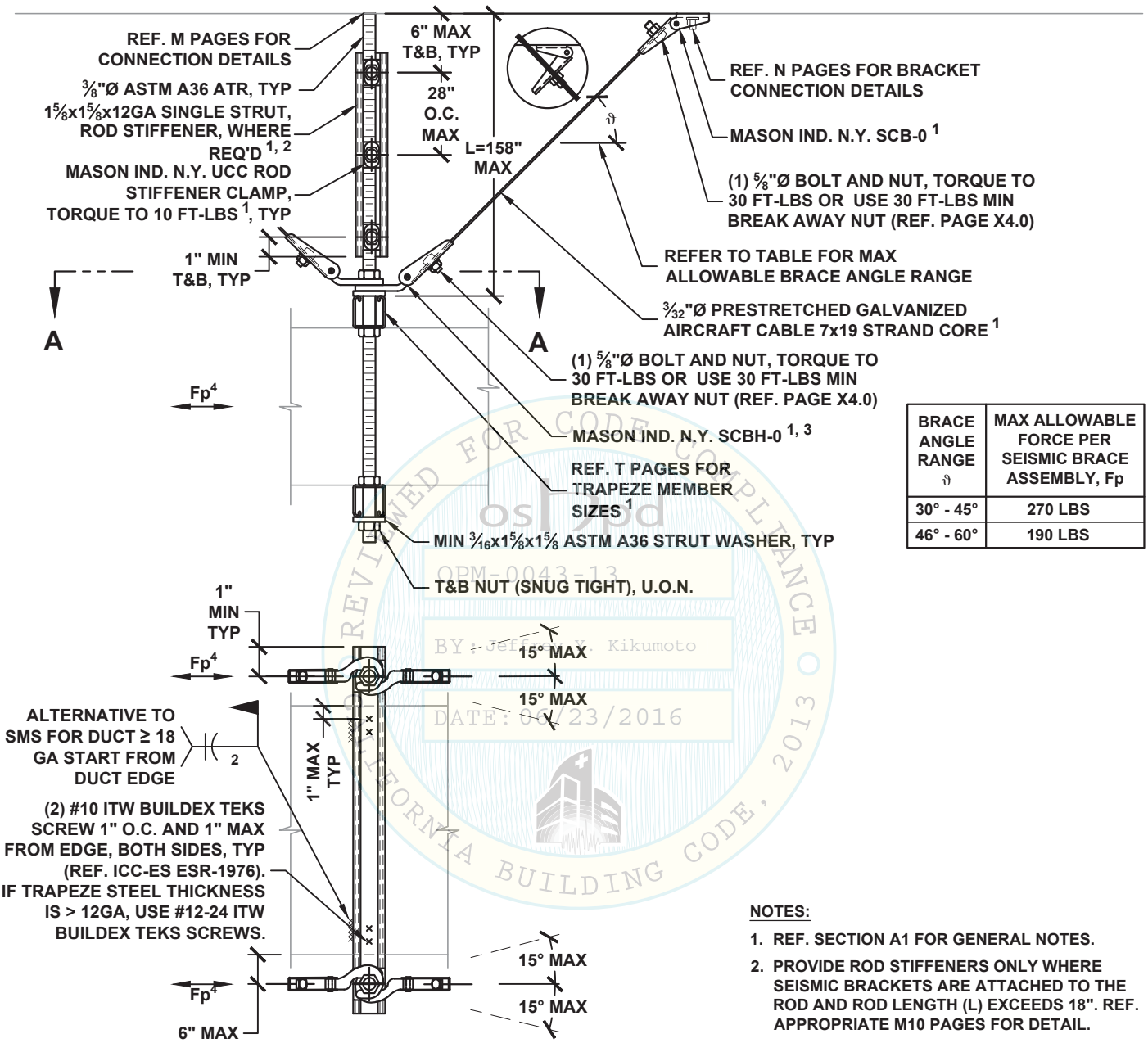

BRACE ANGLE RANGE ϑ	MAX ALLOWABLE FORCE PER SEISMIC BRACE ASSEMBLY, Fp
30° - 45°	270 LBS
46° - 60°	190 LBS

OSHPD
OPM-0043-13
BY: Jeffrey Kikumoto
DATE: 06/23/2016
REVIEWED FOR CODE COMPLIANCE
CALIFORNIA BUILDING CODE, 2013

VIEW A-A

NOTES:

1. REF. SECTION A1 FOR GENERAL NOTES.
2. PROVIDE ROD STIFFENERS ONLY WHERE SEISMIC BRACKETS ARE ATTACHED TO THE ROD AND ROD LENGTH (L) EXCEEDS 18". REF. APPROPRIATE M10 PAGES FOR DETAIL.
3. REF. PAGE A6.0 - A6.2 FOR ALTERNATE ARRANGEMENTS OF SEISMIC BRACES AND ANGLE OR HSS MEMBER AS TRAPEZE.
4. DESIGN PROFESSIONAL SHALL CONSIDER ECCENTRIC LOAD DISTRIBUTION WHEN DETERMINING THE Fp VALUE USED IN DESIGN.

MASON WEST, INC.
1601 E. Miraloma Ave. Placentia, CA 92870
TEL (714) 630 - 0701, www.masonwest.com

Jiefu "Jeff" Zhang, SE
California SE No. S5270

HANGER ROD DIAMETER = 3/8"	RECTANGULAR DUCT ALL-DIRECTIONAL SEISMIC CABLE BRACING SYSTEM 30 PLF MAX	KIT OPTIONS TC0A

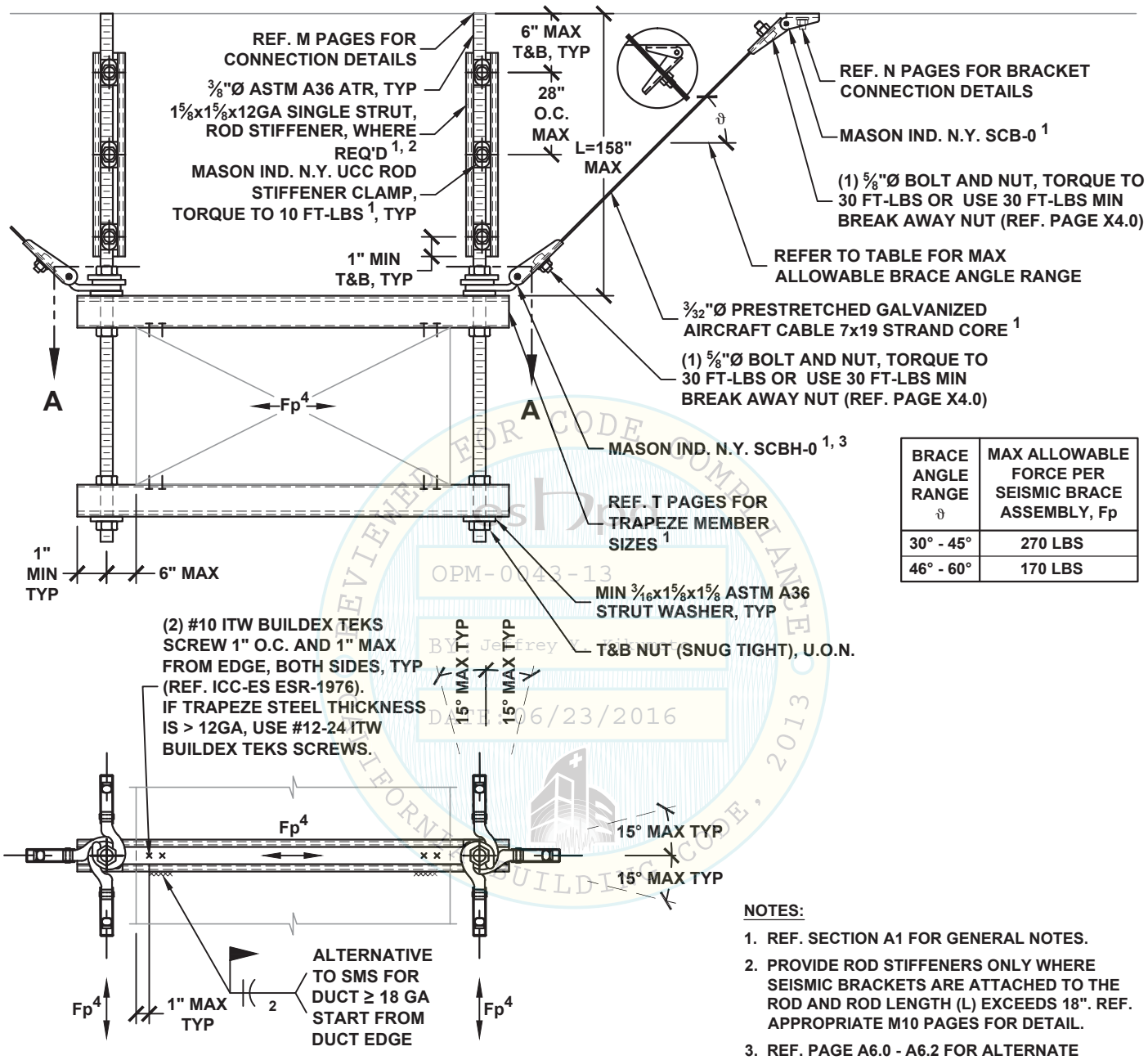

BRACE ANGLE RANGE ϑ	MAX ALLOWABLE FORCE PER SEISMIC BRACE ASSEMBLY, Fp
30° - 45°	270 LBS
46° - 60°	170 LBS

VIEW A-A

NOTES:

1. REF. SECTION A1 FOR GENERAL NOTES.
2. PROVIDE ROD STIFFENERS ONLY WHERE SEISMIC BRACKETS ARE ATTACHED TO THE ROD AND ROD LENGTH (L) EXCEEDS 18". REF. APPROPRIATE M10 PAGES FOR DETAIL.
3. REF. PAGE A6.0 - A6.2 FOR ALTERNATE ARRANGEMENTS OF SEISMIC BRACES AND ANGLE OR HSS MEMBER AS TRAPEZE.
4. DESIGN PROFESSIONAL SHALL CONSIDER ECCENTRIC LOAD DISTRIBUTION WHEN DETERMINING THE Fp VALUE USED IN DESIGN.

REVIEWED FOR CODE COMPLIANCE
OPM-0043-13
BY: Jeffrey K
DATE: 06/23/2016
CALIFORNIA BUILDING CODE, 2013

MASON WEST, INC.
1601 E. Miraloma Ave. Placentia, CA 92870
TEL (714) 630 - 0701, www.masonwest.com

Jiefu "Jeff" Zhang, SE
California SE No. S5270

PAGE
D4.12

HANGER ROD DIAMETER = ½"	RECTANGULAR DUCT TRANSVERSE SEISMIC CABLE BRACING SYSTEM 60 PLF MAX	KIT OPTIONS TC1T

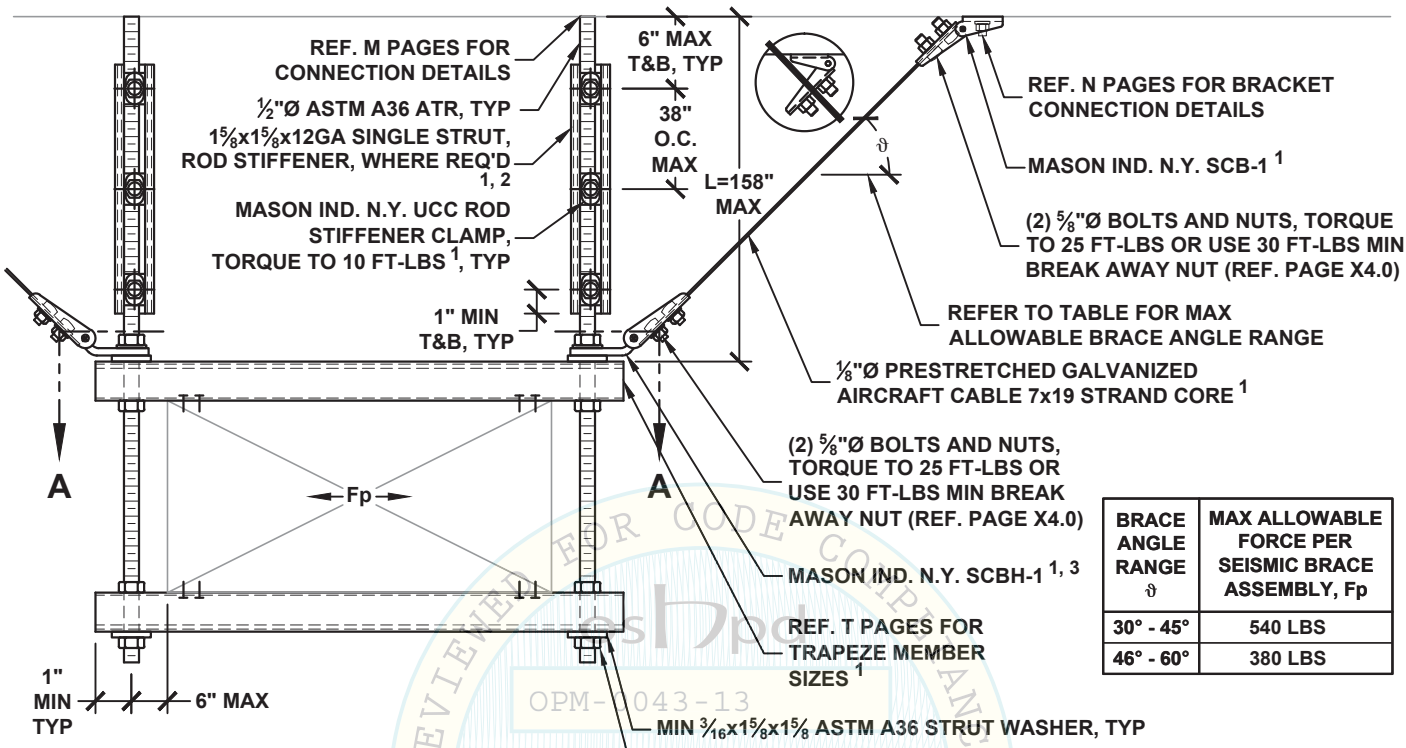

BRACE ANGLE RANGE ϑ	MAX ALLOWABLE FORCE PER SEISMIC BRACE ASSEMBLY, Fp
30° - 45°	540 LBS
46° - 60°	380 LBS

OPM-0043-13
BY: Jeffrey Y. Kikumoto
DATE: 06/23/2016

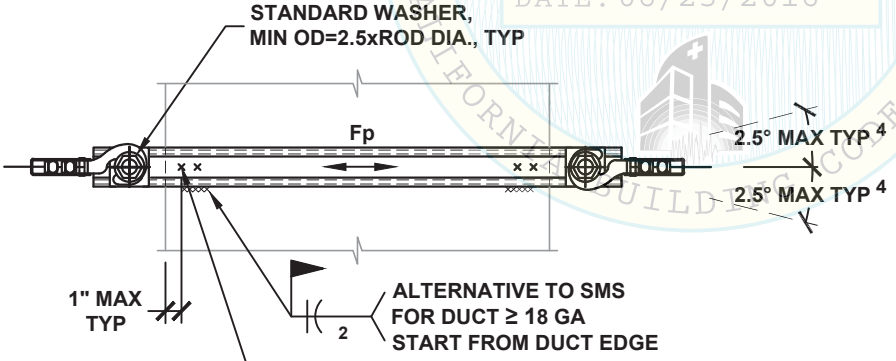

VIEW A-A

NOTES:

1. REF. SECTION A1 FOR GENERAL NOTES.
2. PROVIDE ROD STIFFENERS ONLY WHERE SEISMIC BRACKETS ARE ATTACHED TO THE ROD AND ROD LENGTH (L) EXCEEDS 25". REF. APPROPRIATE M10 PAGES FOR DETAIL.
3. REF. PAGE A6.0 - A6.2 FOR ALTERNATE ARRANGEMENTS OF SEISMIC BRACES AND ANGLE OR HSS MEMBER AS TRAPEZE.
4. ANGLE MAY BE INCREASED TO 15°, REF. PAGE A5.0.

MASON WEST, INC.
1601 E. Miraloma Ave. Placentia, CA 92870
TEL (714) 630 - 0701, www.masonwest.com

Jiefu "Jeff" Zhang, SE
California SE No. S5270

PAGE
D4.20

HANGER ROD DIAMETER = ½"	RECTANGULAR DUCT LONGITUDINAL SEISMIC CABLE BRACING SYSTEM 60 PLF MAX	KIT OPTIONS TC1L

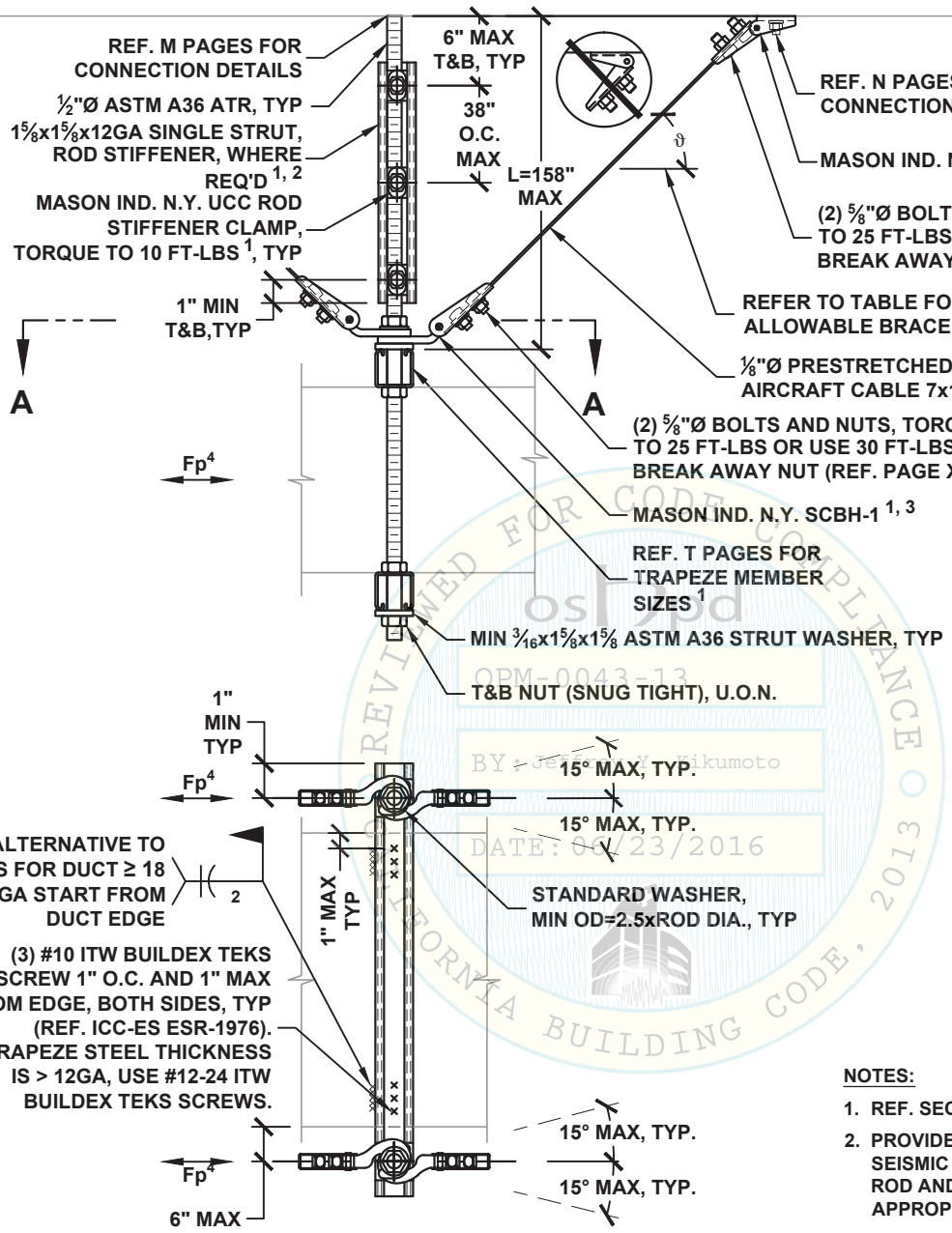

BRACE ANGLE RANGE ϑ	MAX ALLOWABLE FORCE PER SEISMIC BRACE ASSEMBLY, Fp
30° - 45°	540 LBS
46° - 60°	380 LBS

VIEW A-A

NOTES:

1. REF. SECTION A1 FOR GENERAL NOTES.
2. PROVIDE ROD STIFFENERS ONLY WHERE SEISMIC BRACKETS ARE ATTACHED TO THE ROD AND ROD LENGTH (L) EXCEEDS 25". REF. APPROPRIATE M10 PAGES FOR DETAIL.
3. REF. PAGE A6.0 - A6.2 FOR ALTERNATE ARRANGEMENTS OF SEISMIC BRACES AND ANGLE OR HSS MEMBER AS TRAPEZE.
4. DESIGN PROFESSIONAL SHALL CONSIDER ECCENTRIC LOAD DISTRIBUTION WHEN DETERMINING THE Fp VALUE USED IN DESIGN.

REVIEWED FOR CODE COMPLIANCE
OSHPD
OPM-0043-13
BY: Jeffrey Kikumoto
DATE: 06/23/2016
CALIFORNIA BUILDING CODE, 2013

MASON WEST, INC.
1601 E. Miraloma Ave. Placentia, CA 92870
TEL (714) 630 - 0701, www.masonwest.com

Jiefu "Jeff" Zhang, SE
California SE No. S5270

PAGE
D4.21

HANGER ROD DIAMETER = ½"	RECTANGULAR DUCT ALL-DIRECTIONAL SEISMIC CABLE BRACING SYSTEM 60 PLF MAX	KIT OPTIONS TC1A

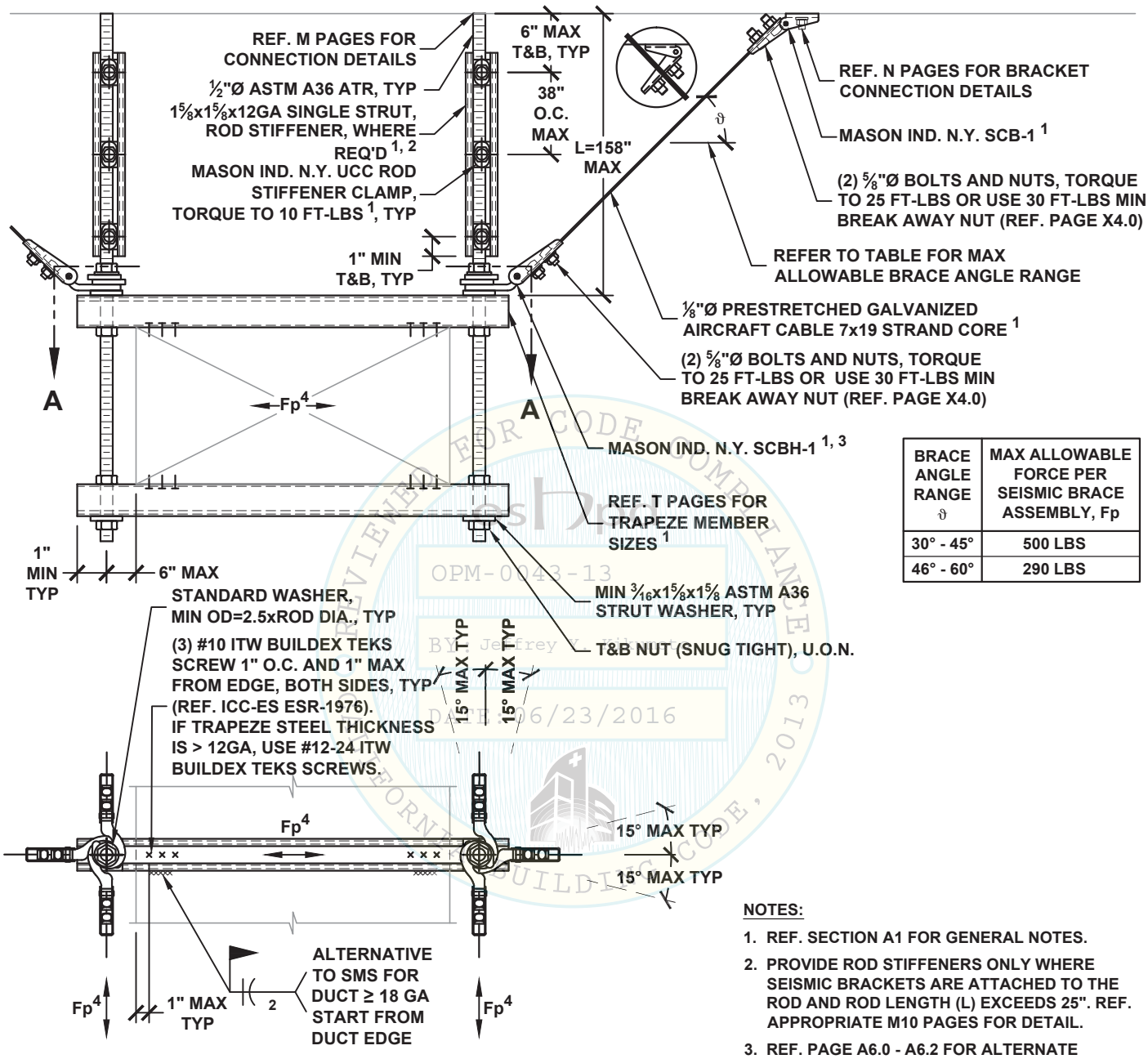

BRACE ANGLE RANGE ϑ	MAX ALLOWABLE FORCE PER SEISMIC BRACE ASSEMBLY, Fp
30° - 45°	500 LBS
46° - 60°	290 LBS

VIEW A-A

NOTES:

1. REF. SECTION A1 FOR GENERAL NOTES.
2. PROVIDE ROD STIFFENERS ONLY WHERE SEISMIC BRACKETS ARE ATTACHED TO THE ROD AND ROD LENGTH (L) EXCEEDS 25". REF. APPROPRIATE M10 PAGES FOR DETAIL.
3. REF. PAGE A6.0 - A6.2 FOR ALTERNATE ARRANGEMENTS OF SEISMIC BRACES AND ANGLE OR HSS MEMBER AS TRAPEZE.
4. DESIGN PROFESSIONAL SHALL CONSIDER ECCENTRIC LOAD DISTRIBUTION WHEN DETERMINING THE Fp VALUE USED IN DESIGN.

REVIEWED FOR CODE COMPLIANCE, 2013 CALIFORNIA BUILDING CODE
OPM-0043-13
BY: Jeffrey K
DATE: 06/23/2016

MASON WEST, INC.
1601 E. Miraloma Ave. Placentia, CA 92870
TEL (714) 630 - 0701, www.masonwest.com

Jiefu "Jeff" Zhang, SE
California SE No. S5270

PAGE
D4.22

HANGER ROD DIAMETER = 5/8"	RECTANGULAR DUCT TRANSVERSE SEISMIC CABLE BRACING SYSTEM 100 PLF MAX	KIT OPTIONS TC1T

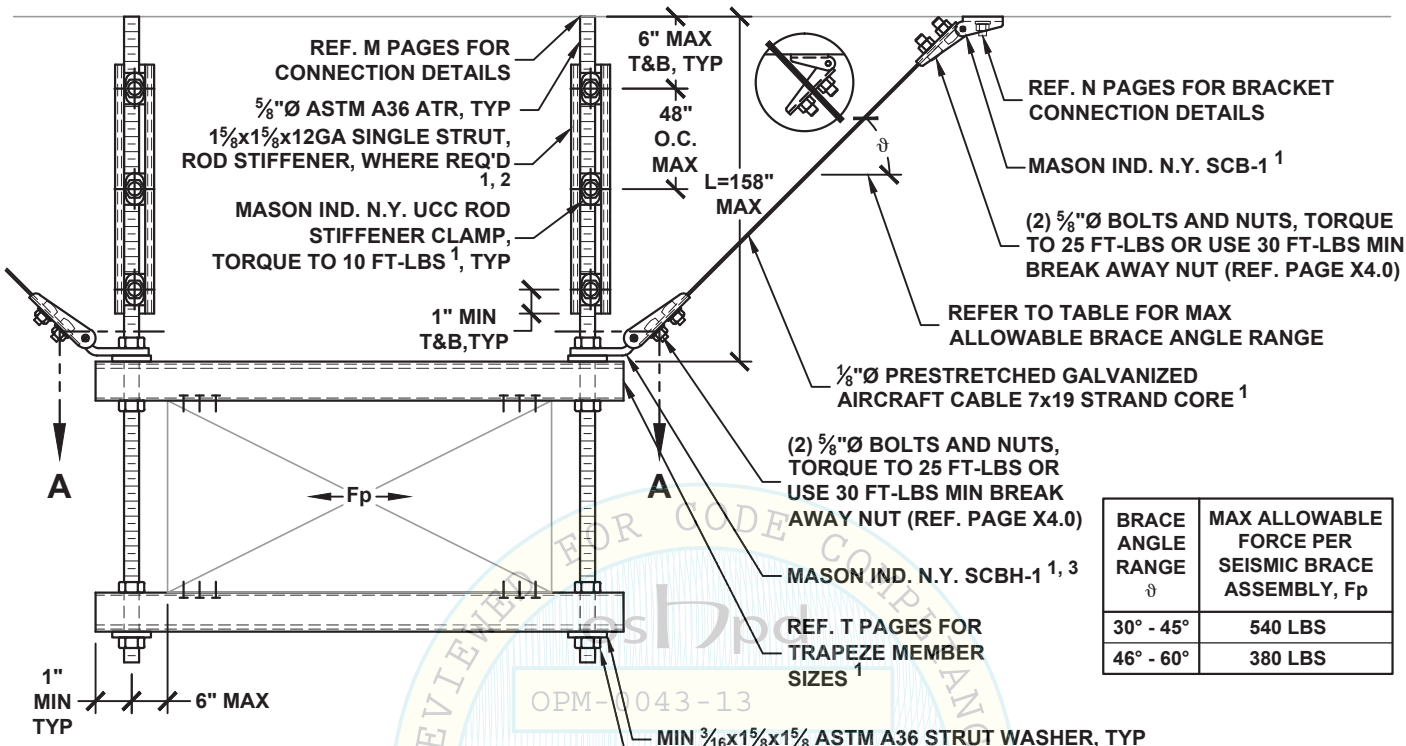

BRACE ANGLE RANGE ϑ	MAX ALLOWABLE FORCE PER SEISMIC BRACE ASSEMBLY, Fp
30° - 45°	540 LBS
46° - 60°	380 LBS

OPM-0043-13
BY: Jeffrey T. Kikumoto
DATE: 06/23/2016

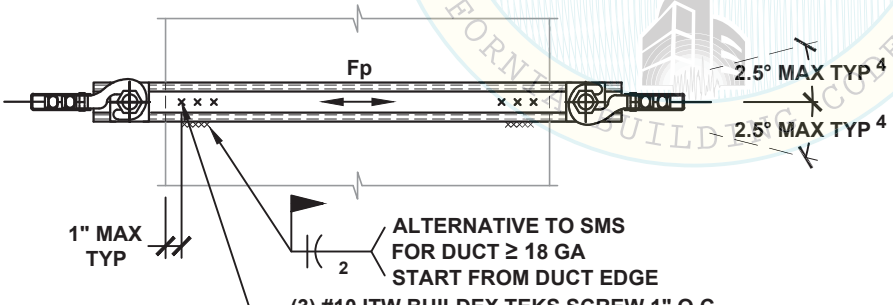

VIEW A-A

NOTES:

1. REF. SECTION A1 FOR GENERAL NOTES.
2. PROVIDE ROD STIFFENERS ONLY WHERE SEISMIC BRACKETS ARE ATTACHED TO THE ROD AND ROD LENGTH (L) EXCEEDS 31". REF. APPROPRIATE M10 PAGES FOR DETAIL.
3. REF. PAGE A6.0 - A6.2 FOR ALTERNATE ARRANGEMENTS OF SEISMIC BRACES AND ANGLE OR HSS MEMBER AS TRAPEZE.
4. ANGLE MAY BE INCREASED TO 15°, REF. PAGE A5.0.

MASON WEST, INC.
1601 E. Miraloma Ave. Placentia, CA 92870
TEL (714) 630 - 0701, www.masonwest.com

Jiefu "Jeff" Zhang, SE
California SE No. S5270

PAGE
D4.30

HANGER ROD DIAMETER = 5/8"	RECTANGULAR DUCT LONGITUDINAL SEISMIC CABLE BRACING SYSTEM 100 PLF MAX	KIT OPTIONS TC1L

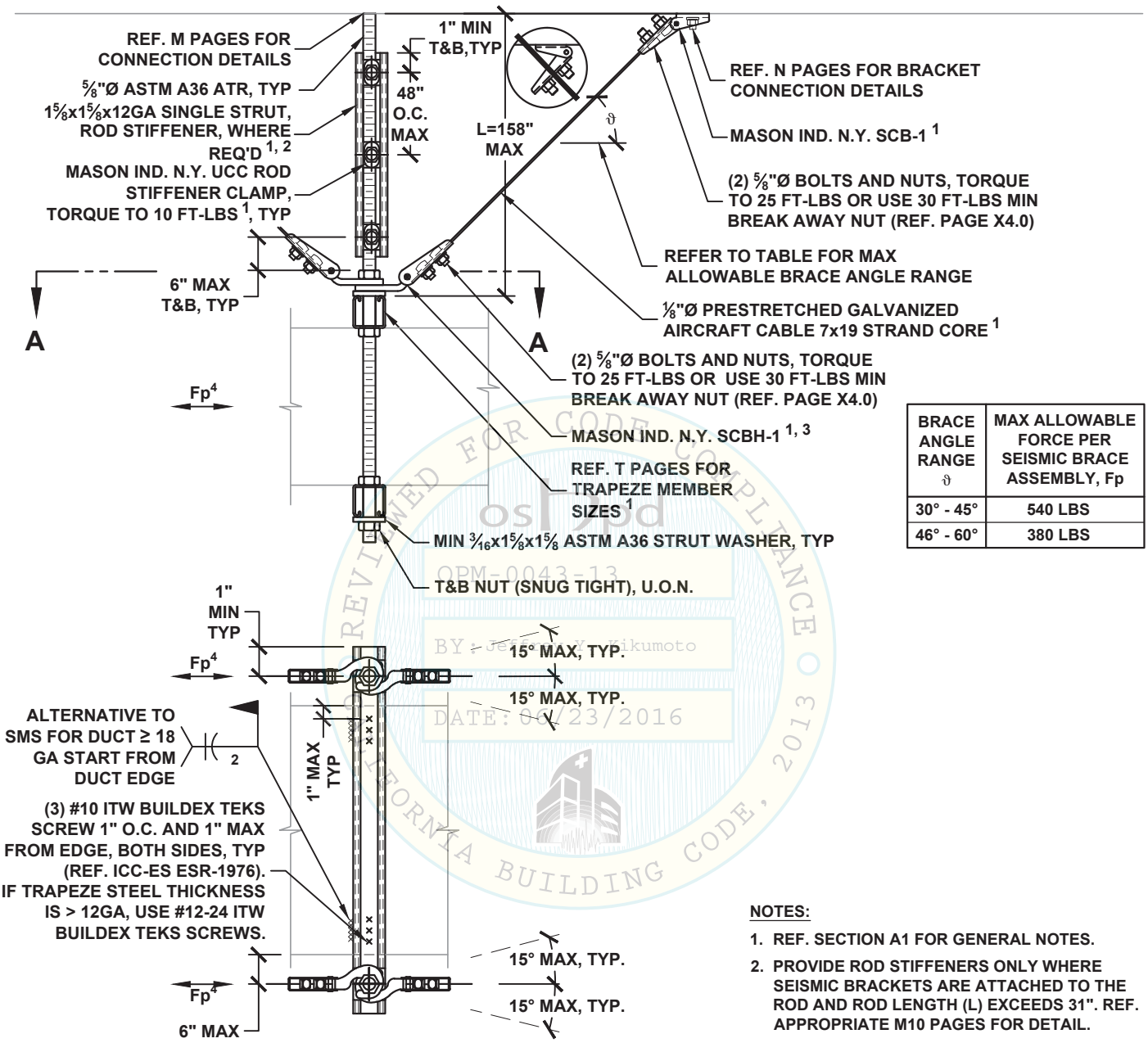

BRACE ANGLE RANGE ϑ	MAX ALLOWABLE FORCE PER SEISMIC BRACE ASSEMBLY, Fp
30° - 45°	540 LBS
46° - 60°	380 LBS

VIEW A-A

NOTES:

1. REF. SECTION A1 FOR GENERAL NOTES.
2. PROVIDE ROD STIFFENERS ONLY WHERE SEISMIC BRACKETS ARE ATTACHED TO THE ROD AND ROD LENGTH (L) EXCEEDS 31". REF. APPROPRIATE M10 PAGES FOR DETAIL.
3. REF. PAGE A6.0 - A6.2 FOR ALTERNATE ARRANGEMENTS OF SEISMIC BRACES AND ANGLE OR HSS MEMBER AS TRAPEZE.
4. DESIGN PROFESSIONAL SHALL CONSIDER ECCENTRIC LOAD DISTRIBUTION WHEN DETERMINING THE Fp VALUE USED IN DESIGN.

REVIEWED FOR CODE COMPLIANCE
OSHPD
OPM-0043-13
BY: Jeffrey Kikumoto
DATE: 06/23/2016
CALIFORNIA BUILDING CODE, 2013

MASON WEST, INC.
1601 E. Miraloma Ave. Placentia, CA 92870
TEL (714) 630 - 0701, www.masonwest.com

Jiefu "Jeff" Zhang, SE
California SE No. S5270

PAGE
D4.31

HANGER ROD DIAMETER = 5/8"	RECTANGULAR DUCT ALL-DIRECTIONAL SEISMIC CABLE BRACING SYSTEM 100 PLF MAX	KIT OPTIONS TC1A

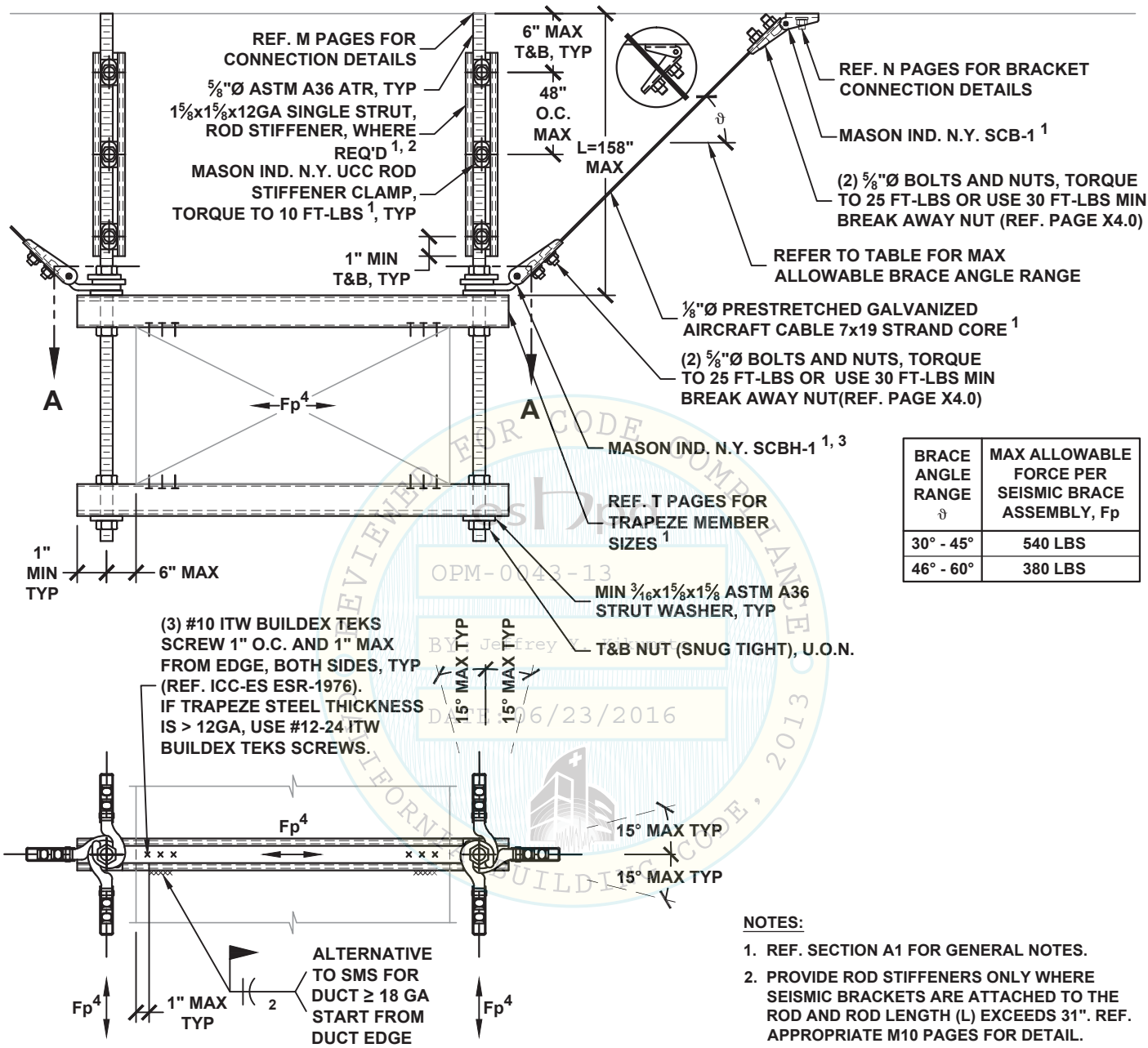

BRACE ANGLE RANGE ϑ	MAX ALLOWABLE FORCE PER SEISMIC BRACE ASSEMBLY, Fp
30° - 45°	540 LBS
46° - 60°	380 LBS

VIEW A-A

NOTES:

1. REF. SECTION A1 FOR GENERAL NOTES.
2. PROVIDE ROD STIFFENERS ONLY WHERE SEISMIC BRACKETS ARE ATTACHED TO THE ROD AND ROD LENGTH (L) EXCEEDS 31". REF. APPROPRIATE M10 PAGES FOR DETAIL.
3. REF. PAGE A6.0 - A6.2 FOR ALTERNATE ARRANGEMENTS OF SEISMIC BRACES AND ANGLE OR HSS MEMBER AS TRAPEZE.
4. DESIGN PROFESSIONAL SHALL CONSIDER ECCENTRI LOAD DISTRIBUTION WHEN DETERMINING THE Fp VALUE USED IN DESIGN.

REVIEWED FOR CODE COMPLIANCE
OPM-0043-13
BY: Jeffrey K
DATE: 06/23/2016
CALIFORNIA BUILDING CODE, 2013

MASON WEST, INC.
1601 E. Miraloma Ave. Placentia, CA 92870
TEL (714) 630 - 0701, www.masonwest.com

Jiefu "Jeff" Zhang, SE
California SE No. S5270

PAGE
D4.32

HANGER ROD DIAMETER = 3/8"	RECTANGULAR DUCT X-PATTERN SEISMIC CABLE BRACING SYSTEM 30 PLF MAX	KIT OPTIONS TC0X

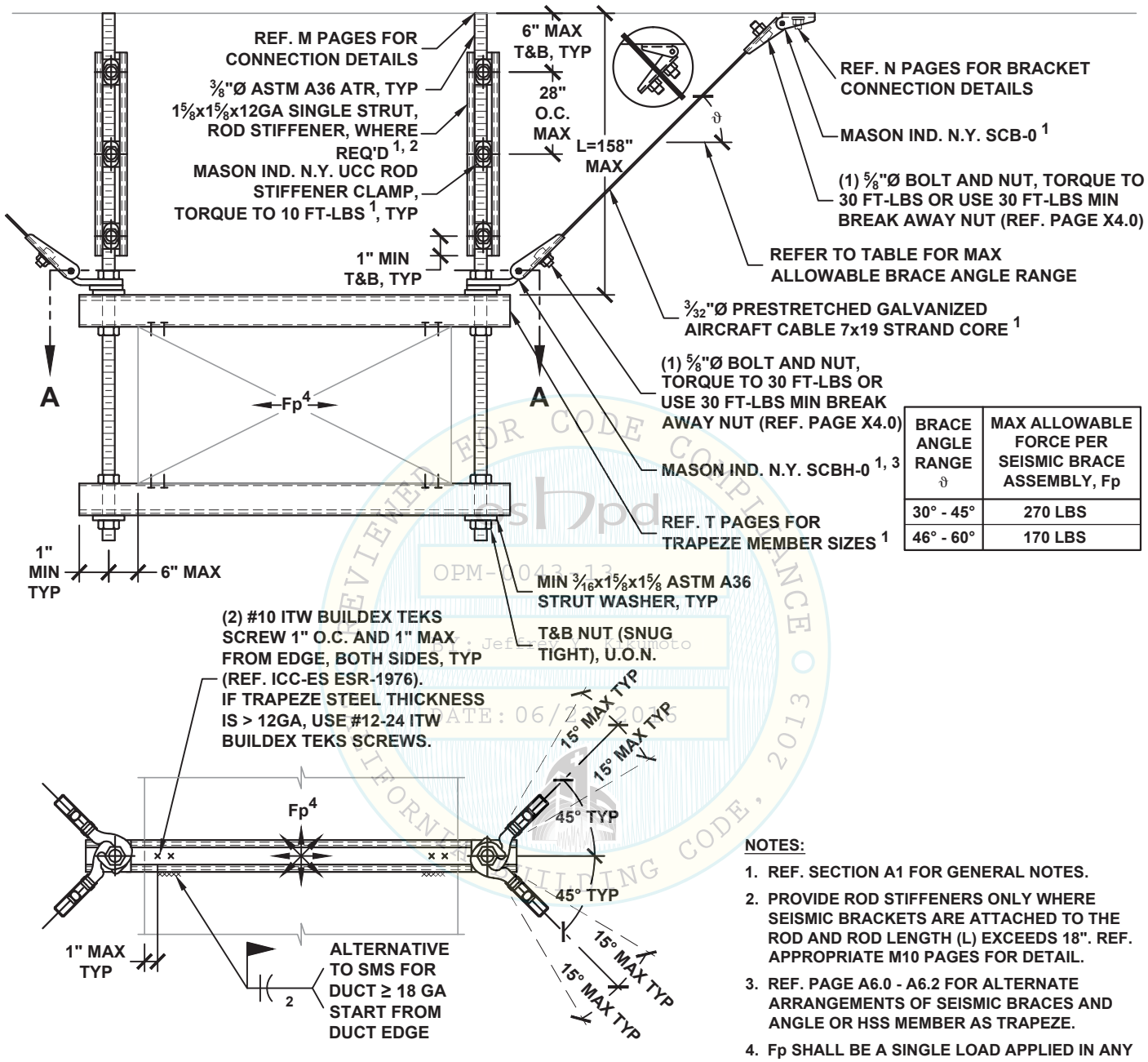

BRACE ANGLE RANGE ϑ	MAX ALLOWABLE FORCE PER SEISMIC BRACE ASSEMBLY, Fp
30° - 45°	270 LBS
46° - 60°	170 LBS

VIEW A-A

NOTES:

1. REF. SECTION A1 FOR GENERAL NOTES.
2. PROVIDE ROD STIFFENERS ONLY WHERE SEISMIC BRACKETS ARE ATTACHED TO THE ROD AND ROD LENGTH (L) EXCEEDS 18". REF. APPROPRIATE M10 PAGES FOR DETAIL.
3. REF. PAGE A6.0 - A6.2 FOR ALTERNATE ARRANGEMENTS OF SEISMIC BRACES AND ANGLE OR HSS MEMBER AS TRAPEZE.
4. Fp SHALL BE A SINGLE LOAD APPLIED IN ANY HORIZONTAL DIRECTION. MULTIPLE ARROWS DO NOT SIGNIFY SIMULTANEOUS Fp LOADS ACTING AT ONE TIME. DESIGN PROFESSIONAL SHALL CONSIDER ECCENTRIC LOAD DISTRIBUTION WHEN DETERMINING THE Fp VALUE USED IN DESIGN.

REVIEWED FOR CODE COMPLIANCE CALIFORNIA BUILDING CODE, 2013
OPM-0043-13
Reviewed by: Jeffrey Kikumoto
DATE: 06/23/2016

MASON WEST, INC.
1601 E. Miraloma Ave. Placentia, CA 92870
TEL (714) 630 - 0701, www.masonwest.com

Jiefu "Jeff" Zhang, SE
California SE No. S5270

PAGE
D5.10

HANGER ROD DIAMETER = ½"	RECTANGULAR DUCT X-PATTERN SEISMIC CABLE BRACING SYSTEM 60 PLF MAX	KIT OPTIONS TC1X

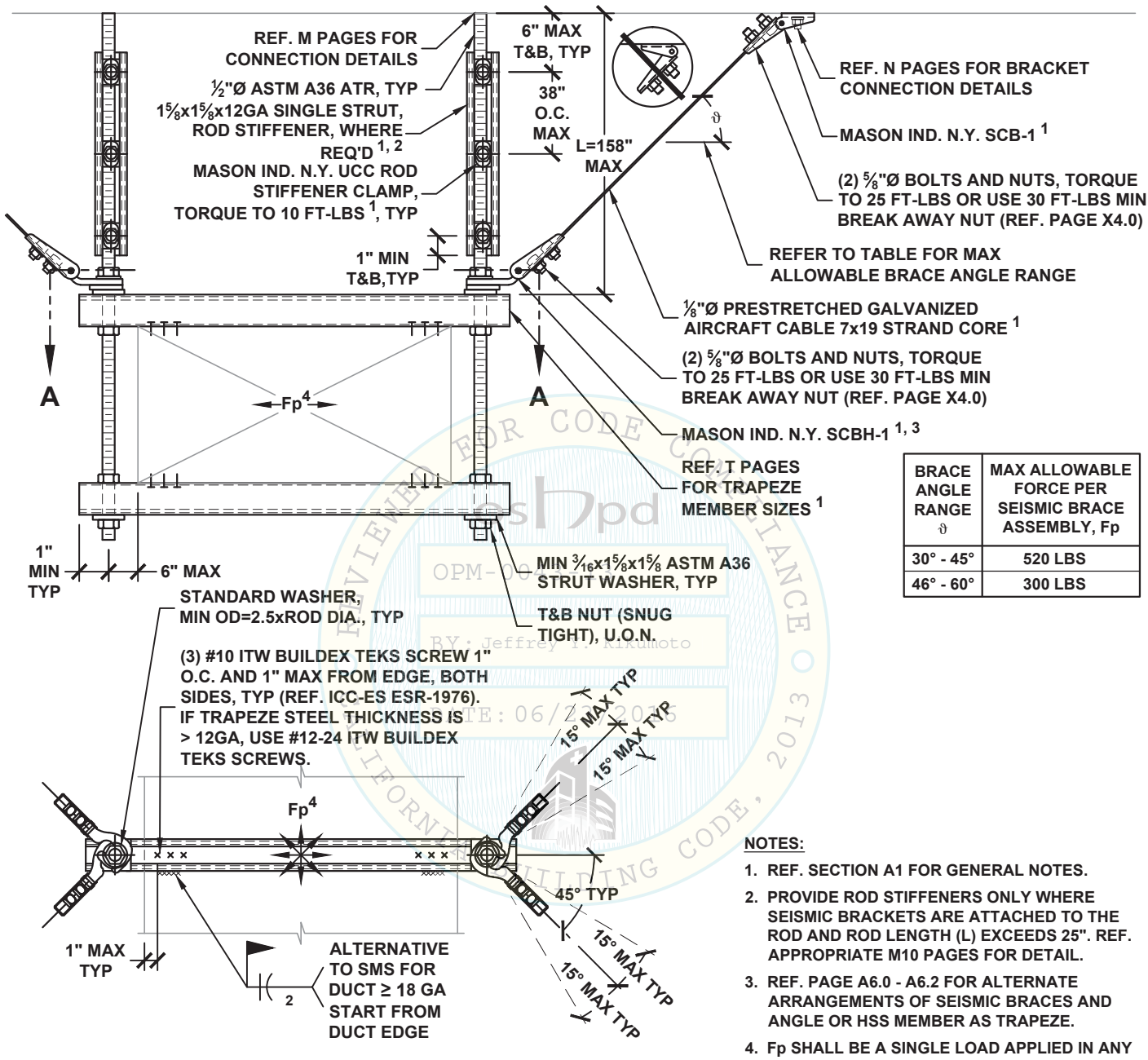

BRACE ANGLE RANGE ϑ	MAX ALLOWABLE FORCE PER SEISMIC BRACE ASSEMBLY, Fp
30° - 45°	520 LBS
46° - 60°	300 LBS

VIEW A-A

NOTES:

1. REF. SECTION A1 FOR GENERAL NOTES.
2. PROVIDE ROD STIFFENERS ONLY WHERE SEISMIC BRACKETS ARE ATTACHED TO THE ROD AND ROD LENGTH (L) EXCEEDS 25". REF. APPROPRIATE M10 PAGES FOR DETAIL.
3. REF. PAGE A6.0 - A6.2 FOR ALTERNATE ARRANGEMENTS OF SEISMIC BRACES AND ANGLE OR HSS MEMBER AS TRAPEZE.
4. Fp SHALL BE A SINGLE LOAD APPLIED IN ANY HORIZONTAL DIRECTION. MULTIPLE ARROWS DO NOT SIGNIFY SIMULTANEOUS Fp LOADS ACTING AT ONE TIME. DESIGN PROFESSIONAL SHALL CONSIDER ECCENTRIC LOAD DISTRIBUTION WHEN DETERMINING THE Fp VALUE USED IN DESIGN.

REVIEWED FOR CODE COMPLIANCE
OPM-0043-13
BY: Jeffrey T. Kikumoto
DATE: 06/23/2016
CALIFORNIA BUILDING CODE, 2013

MASON WEST, INC.
1601 E. Miraloma Ave. Placentia, CA 92870
TEL (714) 630 - 0701, www.masonwest.com

Jiefu "Jeff" Zhang, SE
California SE No. S5270

PAGE
D5.11

HANGER ROD DIAMETER = 5/8"	RECTANGULAR DUCT X-PATTERN SEISMIC CABLE BRACING SYSTEM 100 PLF MAX	KIT OPTIONS TC1X

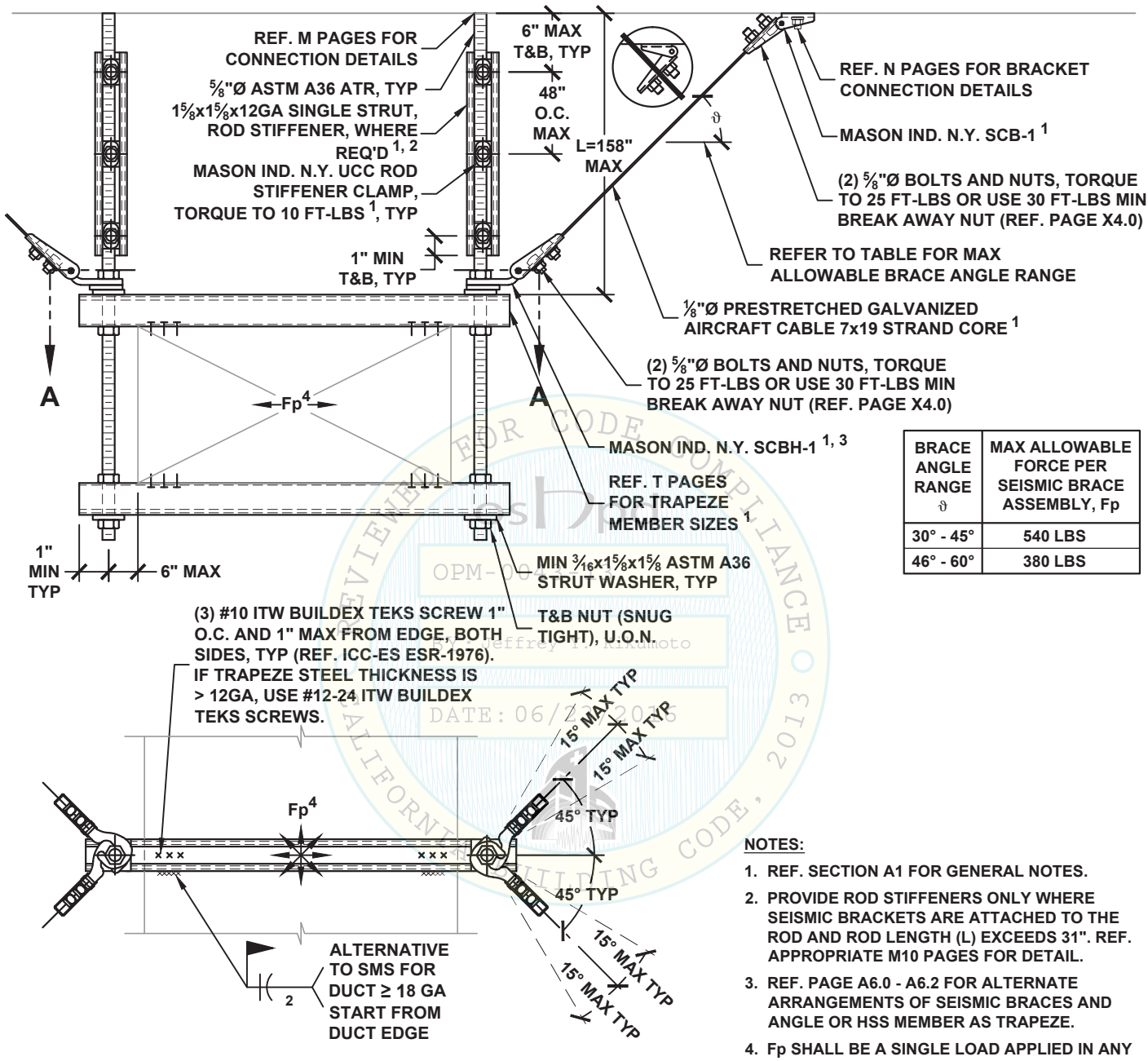

BRACE ANGLE RANGE ϑ	MAX ALLOWABLE FORCE PER SEISMIC BRACE ASSEMBLY, Fp
30° - 45°	540 LBS
46° - 60°	380 LBS

VIEW A-A

NOTES:

1. REF. SECTION A1 FOR GENERAL NOTES.
2. PROVIDE ROD STIFFENERS ONLY WHERE SEISMIC BRACKETS ARE ATTACHED TO THE ROD AND ROD LENGTH (L) EXCEEDS 31". REF. APPROPRIATE M10 PAGES FOR DETAIL.
3. REF. PAGE A6.0 - A6.2 FOR ALTERNATE ARRANGEMENTS OF SEISMIC BRACES AND ANGLE OR HSS MEMBER AS TRAPEZE.
4. Fp SHALL BE A SINGLE LOAD APPLIED IN ANY HORIZONTAL DIRECTION. MULTIPLE ARROWS DO NOT SIGNIFY SIMULTANEOUS Fp LOADS ACTING AT ONE TIME. DESIGN PROFESSIONAL SHALL CONSIDER ECCENTRIC LOAD DISTRIBUTION WHEN DETERMING THE Fp VALUE USED IN DESIGN.

REVIEWED FOR CODE COMPLIANCE CALIFORNIA BUILDING CODE, 2013 OPM-0043-13 Reviewed by: Jeffrey H. Kikumoto DATE: 06/23/2016

MASON WEST, INC.
1601 E. Miraloma Ave. Placentia, CA 92870
TEL (714) 630 - 0701, www.masonwest.com

Jiefu "Jeff" Zhang, SE
California SE No. S5270

PAGE
D5.12

HANGER ROD DIAMETER = 3/8"	ROUND DUCT TRANSVERSE SEISMIC CABLE BRACING SYSTEM 30 PLF MAX	KIT OPTIONS TC0T

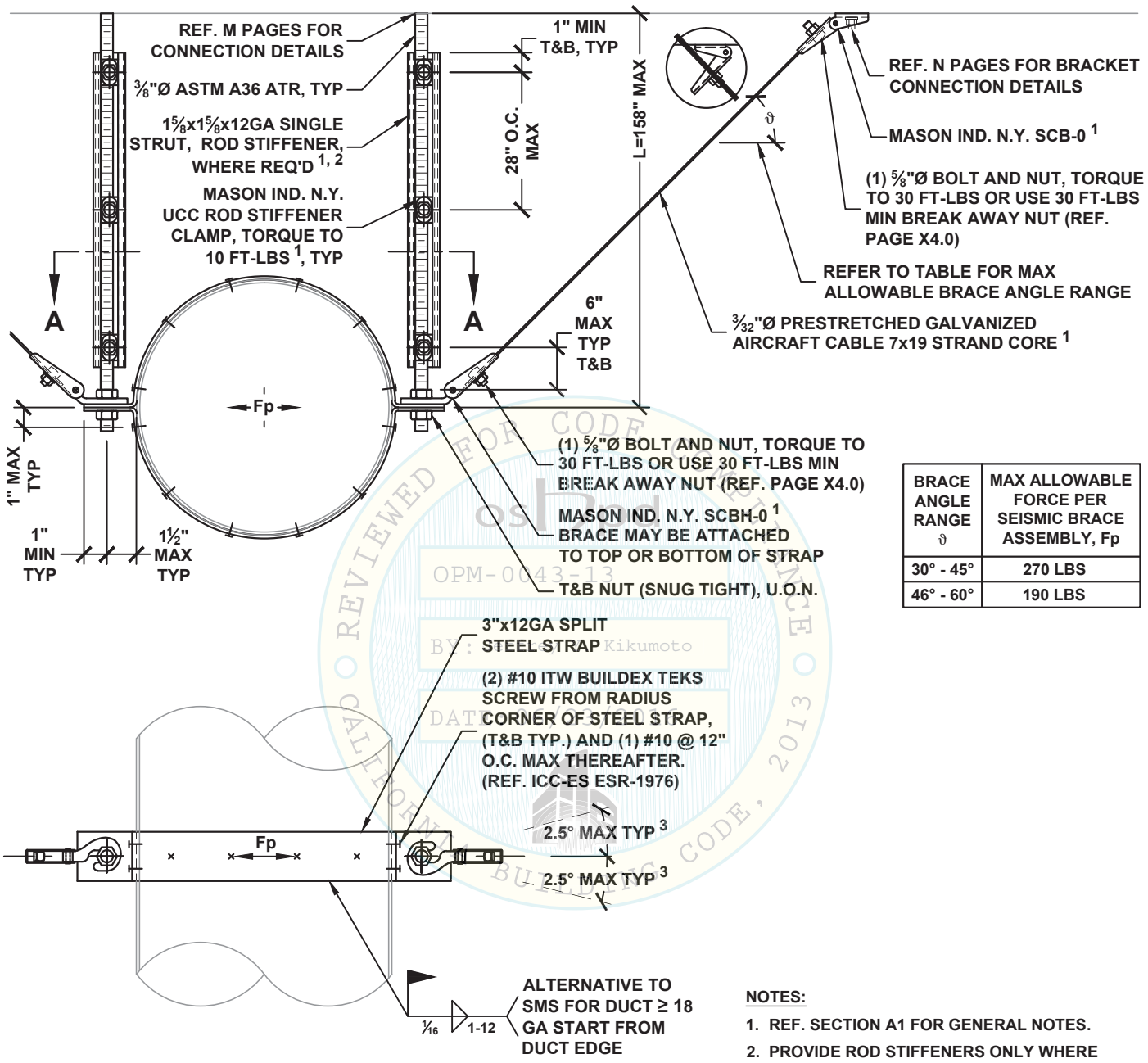

BRACE ANGLE RANGE ϑ	MAX ALLOWABLE FORCE PER SEISMIC BRACE ASSEMBLY, Fp
30° - 45°	270 LBS
46° - 60°	190 LBS

VIEW A-A

NOTES:

1. REF. SECTION A1 FOR GENERAL NOTES.
2. PROVIDE ROD STIFFENERS ONLY WHERE SEISMIC BRACKETS ARE ATTACHED TO THE ROD AND ROD LENGTH (L) EXCEEDS 18". REF. APPROPRIATE M10 PAGES FOR DETAIL.
3. ANGLE MAY BE INCREASED TO 15°, REF. PAGE A5.0.

REVIEWED FOR CODE COMPLIANCE
OSHPD
OPM-0043-13
BY: Jeffrey Kikumoto
DATE: 06/23/2016
CALIFORNIA BUILDING CODE, 2013

MASON WEST, INC.
1601 E. Miraloma Ave. Placentia, CA 92870
TEL (714) 630 - 0701, www.masonwest.com

Jiefu "Jeff" Zhang, SE
California SE No. S5270

PAGE
D6.10

HANGER ROD DIAMETER = ⅜"	ROUND DUCT LONGITUDINAL SEISMIC CABLE BRACING SYSTEM 30 PLF MAX	KIT OPTIONS TC0L

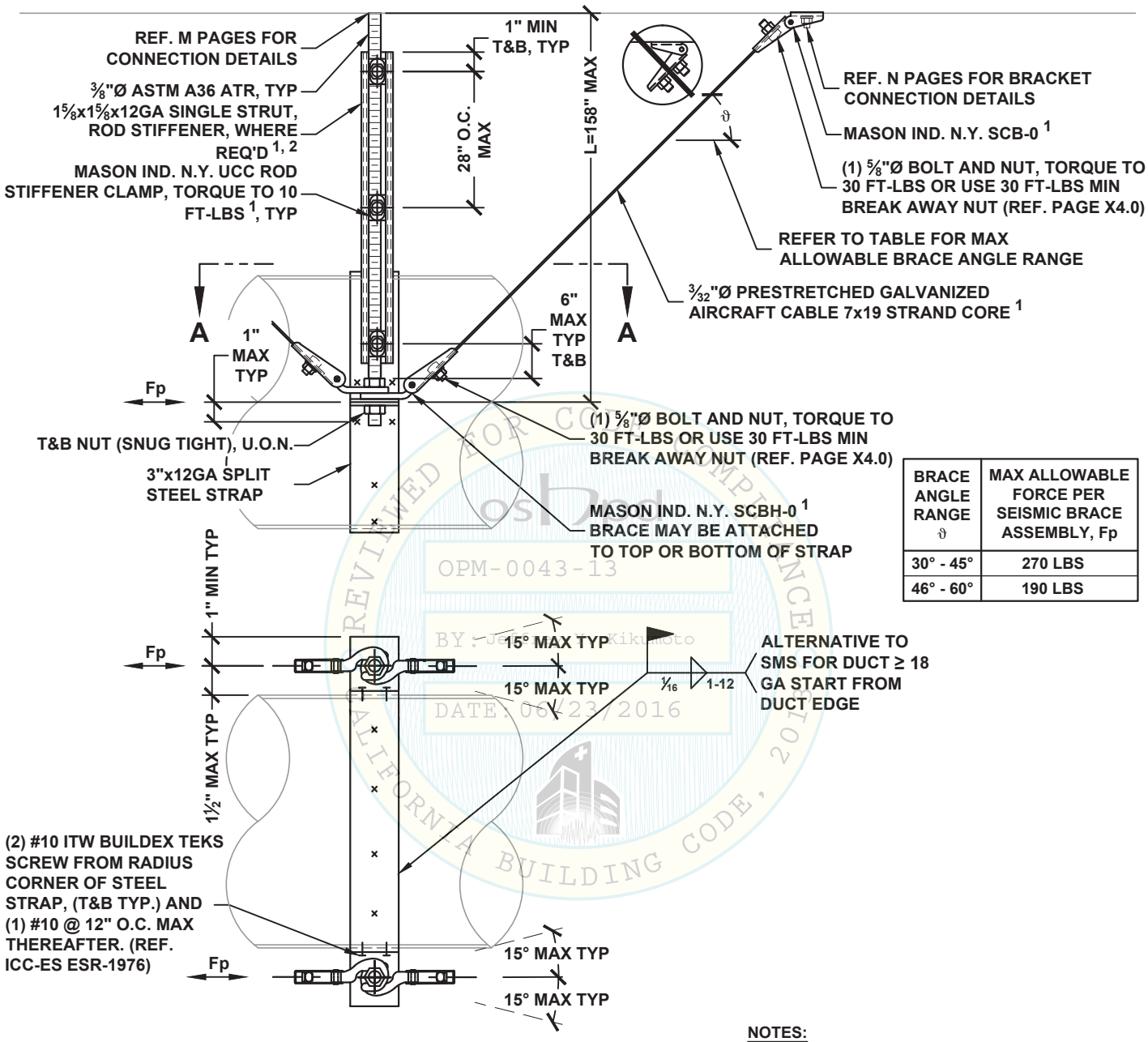

BRACE ANGLE RANGE ϑ	MAX ALLOWABLE FORCE PER SEISMIC BRACE ASSEMBLY, Fp
30° - 45°	270 LBS
46° - 60°	190 LBS

REVIEWED FOR CODE COMPLIANCE
OSHPD
OPM-0043-13
BY: Jeffrey Kikumoto
DATE: 06/23/2016
CALIFORNIA BUILDING CODE, 2016

NOTES:

1. REF. SECTION A1 FOR GENERAL NOTES.
2. PROVIDE ROD STIFFENERS ONLY WHERE SEISMIC BRACKETS ARE ATTACHED TO THE ROD AND ROD LENGTH (L) EXCEEDS 18". REF. APPROPRIATE M10 PAGES FOR DETAIL.

VIEW A-A

MASON WEST, INC.
1601 E. Miraloma Ave. Placentia, CA 92870
TEL (714) 630 - 0701, www.masonwest.com

Jiefu "Jeff" Zhang, SE
California SE No. S5270

HANGER ROD DIAMETER = 3/8"	ROUND DUCT ALL-DIRECTIONAL SEISMIC CABLE BRACING SYSTEM 30 PLF MAX	KIT OPTIONS TC0A

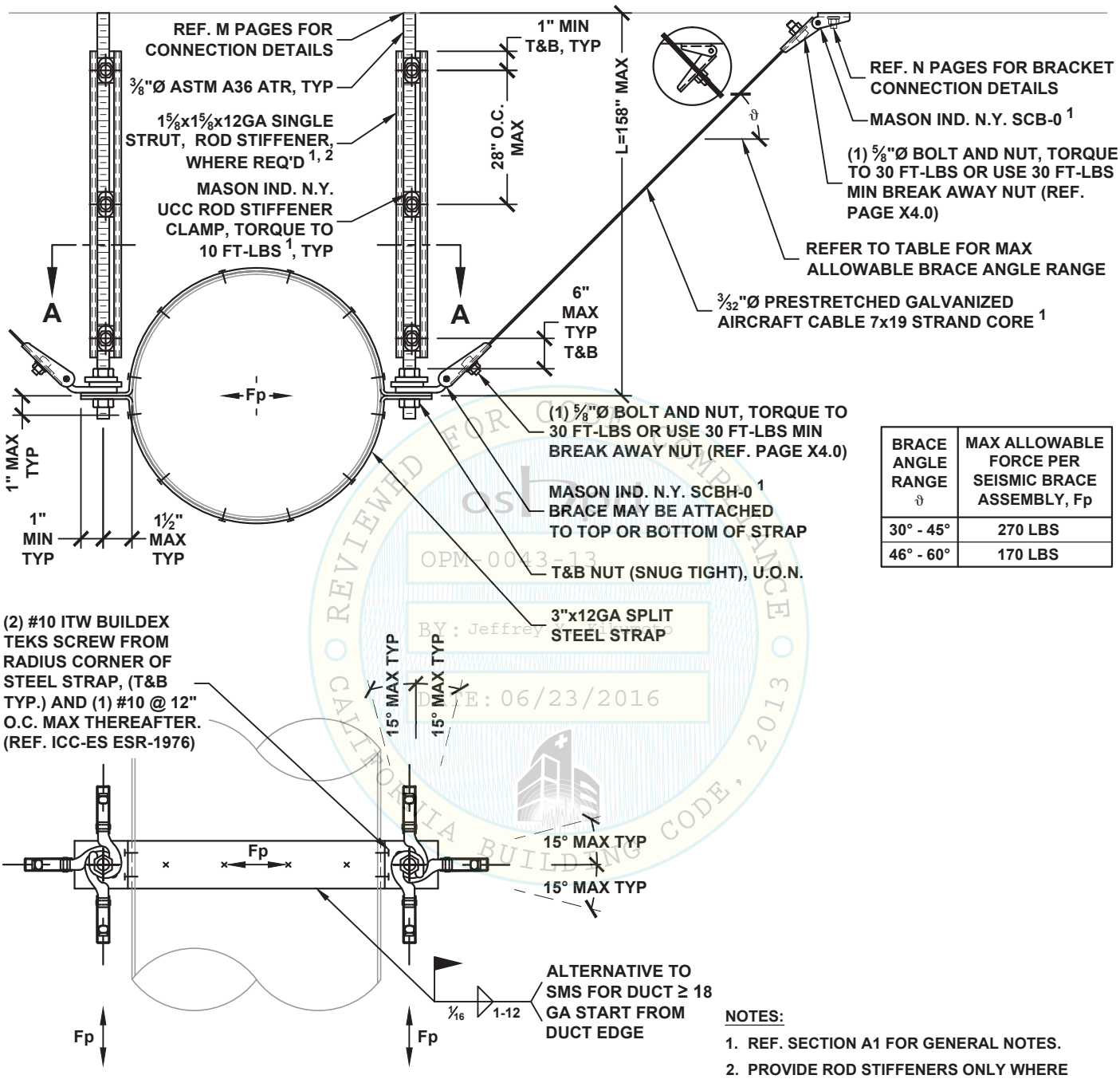

BRACE ANGLE RANGE ϑ	MAX ALLOWABLE FORCE PER SEISMIC BRACE ASSEMBLY, Fp
30° - 45°	270 LBS
46° - 60°	170 LBS

VIEW A-A

NOTES:

1. REF. SECTION A1 FOR GENERAL NOTES.
2. PROVIDE ROD STIFFENERS ONLY WHERE SEISMIC BRACKETS ARE ATTACHED TO THE ROD AND ROD LENGTH (L) EXCEEDS 18". REF. APPROPRIATE M10 PAGES FOR DETAIL.

OSHPD PREAPPROVED
OPM-0043-13
BY: Jeffrey Kikumoto
DATE: 06/23/2016
REVIEWED FOR CODE COMPLIANCE
CALIFORNIA BUILDING CODE, 2013

MASON WEST, INC.
1601 E. Miraloma Ave. Placentia, CA 92870
TEL (714) 630 - 0701, www.masonwest.com

Jiefu "Jeff" Zhang, SE
California SE No. S5270

PAGE **D6.12**

HANGER ROD DIAMETER = ½"	ROUND DUCT TRANSVERSE SEISMIC CABLE BRACING SYSTEM 60 PLF MAX	KIT OPTIONS TC1T

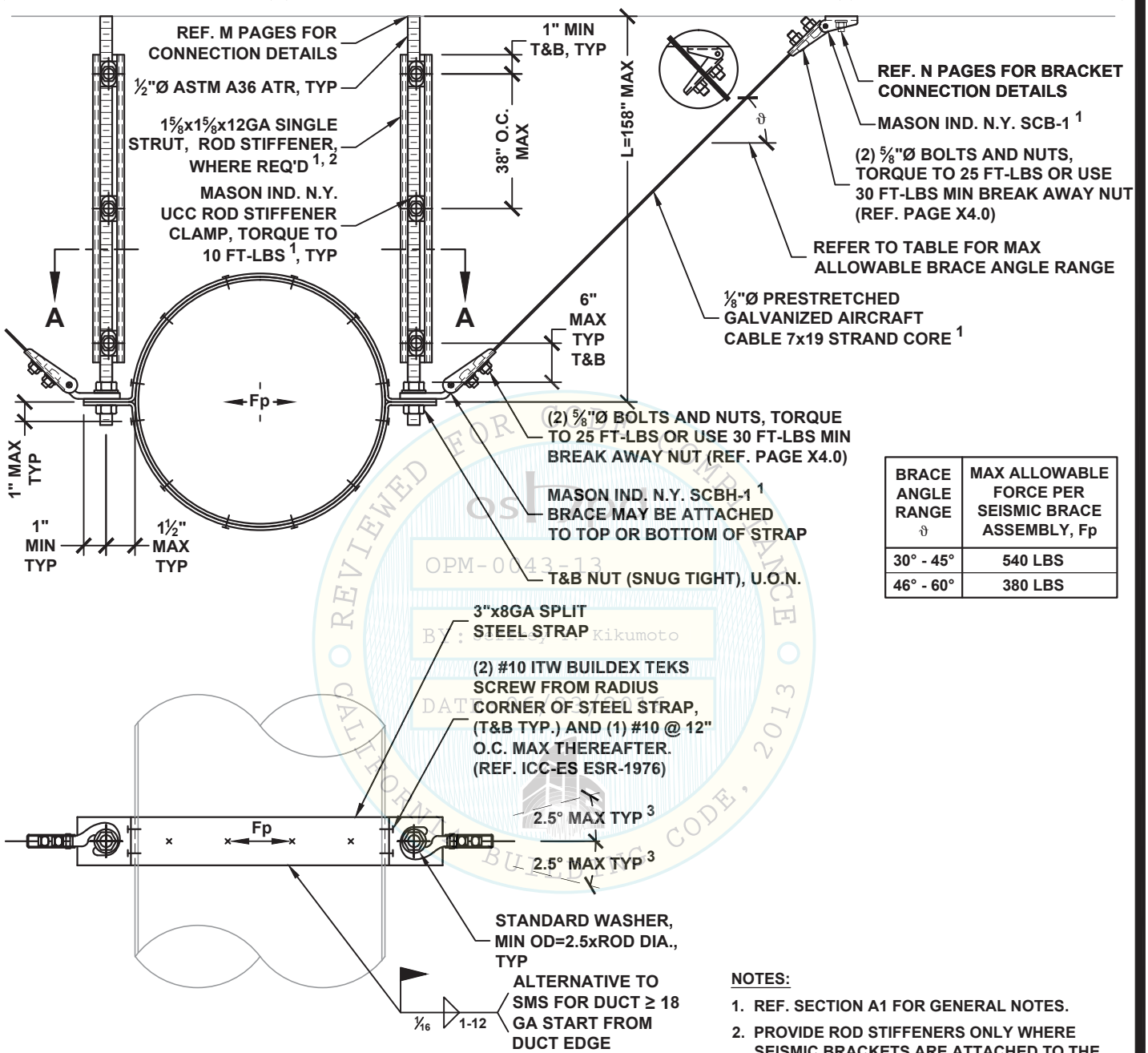

BRACE ANGLE RANGE ϑ	MAX ALLOWABLE FORCE PER SEISMIC BRACE ASSEMBLY, Fp
30° - 45°	540 LBS
46° - 60°	380 LBS

VIEW A-A

NOTES:

1. REF. SECTION A1 FOR GENERAL NOTES.
2. PROVIDE ROD STIFFENERS ONLY WHERE SEISMIC BRACKETS ARE ATTACHED TO THE ROD AND ROD LENGTH (L) EXCEEDS 25". REF. APPROPRIATE M10 PAGES FOR DETAIL.
3. ANGLE MAY BE INCREASED TO 15°, REF. PAGE A5.0.

OPM-0043-13 REVIEWED FOR CODE COMPLIANCE BY: Jeffrey M Kikumoto DATE: 06/23/2016 CALIFORNIA BUILDING CODE, 2013

MASON WEST, INC.
1601 E. Miraloma Ave. Placentia, CA 92870
TEL (714) 630 - 0701, www.masonwest.com

Jiefu "Jeff" Zhang, SE
California SE No. S5270

PAGE
D6.20

HANGER ROD DIAMETER = ½"	ROUND DUCT LONGITUDINAL SEISMIC CABLE BRACING SYSTEM 60 PLF MAX	KIT OPTIONS TC1L

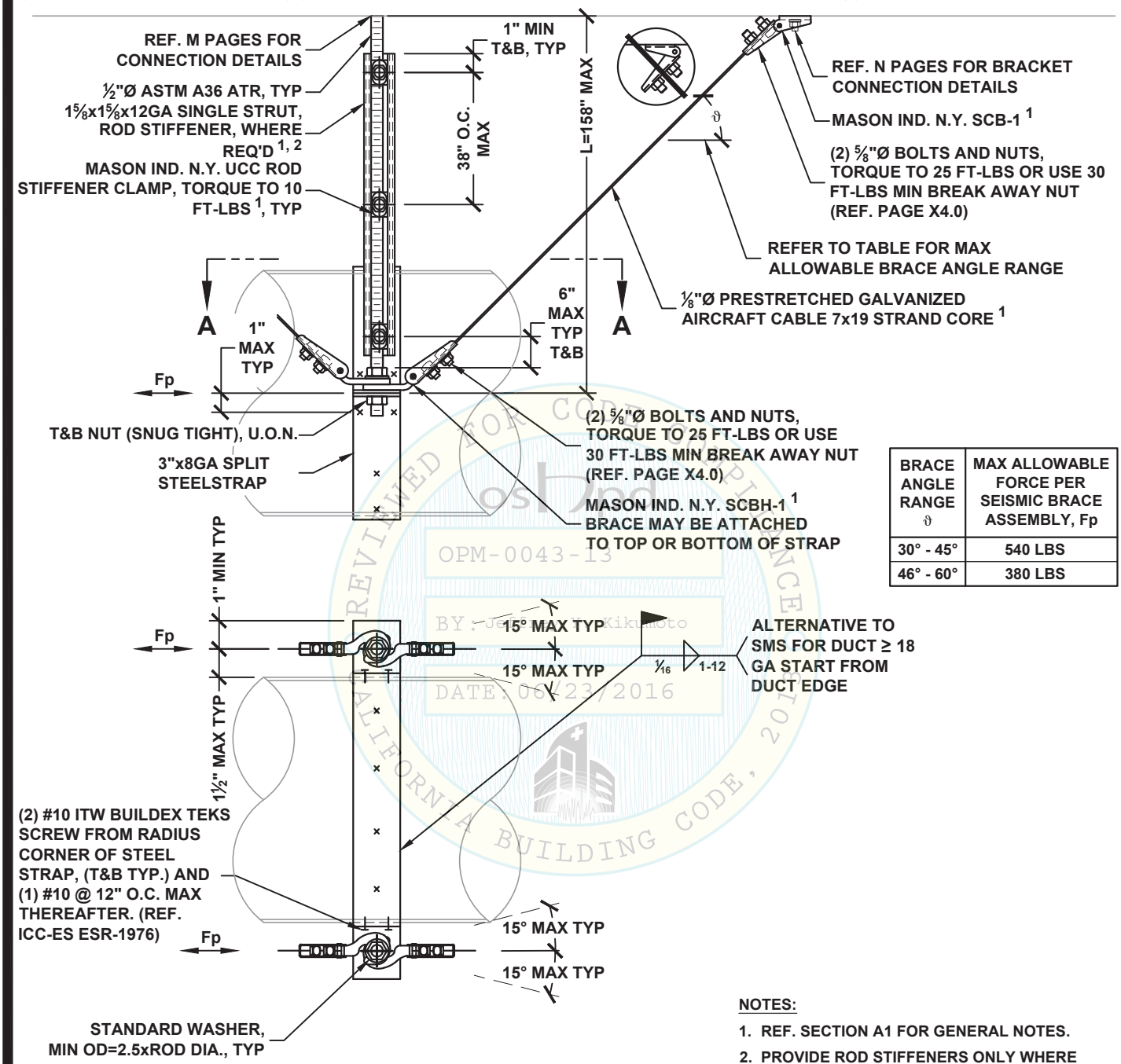

BRACE ANGLE RANGE ϑ	MAX ALLOWABLE FORCE PER SEISMIC BRACE ASSEMBLY, Fp
30° - 45°	540 LBS
46° - 60°	380 LBS

VIEW A-A

NOTES:

1. REF. SECTION A1 FOR GENERAL NOTES.
2. PROVIDE ROD STIFFENERS ONLY WHERE SEISMIC BRACKETS ARE ATTACHED TO THE ROD AND ROD LENGTH (L) EXCEEDS 25". REF. APPROPRIATE M10 PAGES FOR DETAIL.

REVIEWED FOR CODE COMPLIANCE
OSHPD
OPM-0043-13
BY: Jeffrey Kikumoto
DATE: 06/23/2016
CALIFORNIA BUILDING CODE, 2013

MASON WEST, INC.
1601 E. Miraloma Ave. Placentia, CA 92870
TEL (714) 630 - 0701, www.masonwest.com

Jiefu "Jeff" Zhang, SE
California SE No. S5270

HANGER ROD DIAMETER = ½"	ROUND DUCT ALL-DIRECTIONAL SEISMIC CABLE BRACING SYSTEM 60 PLF MAX	KIT OPTIONS TC1A

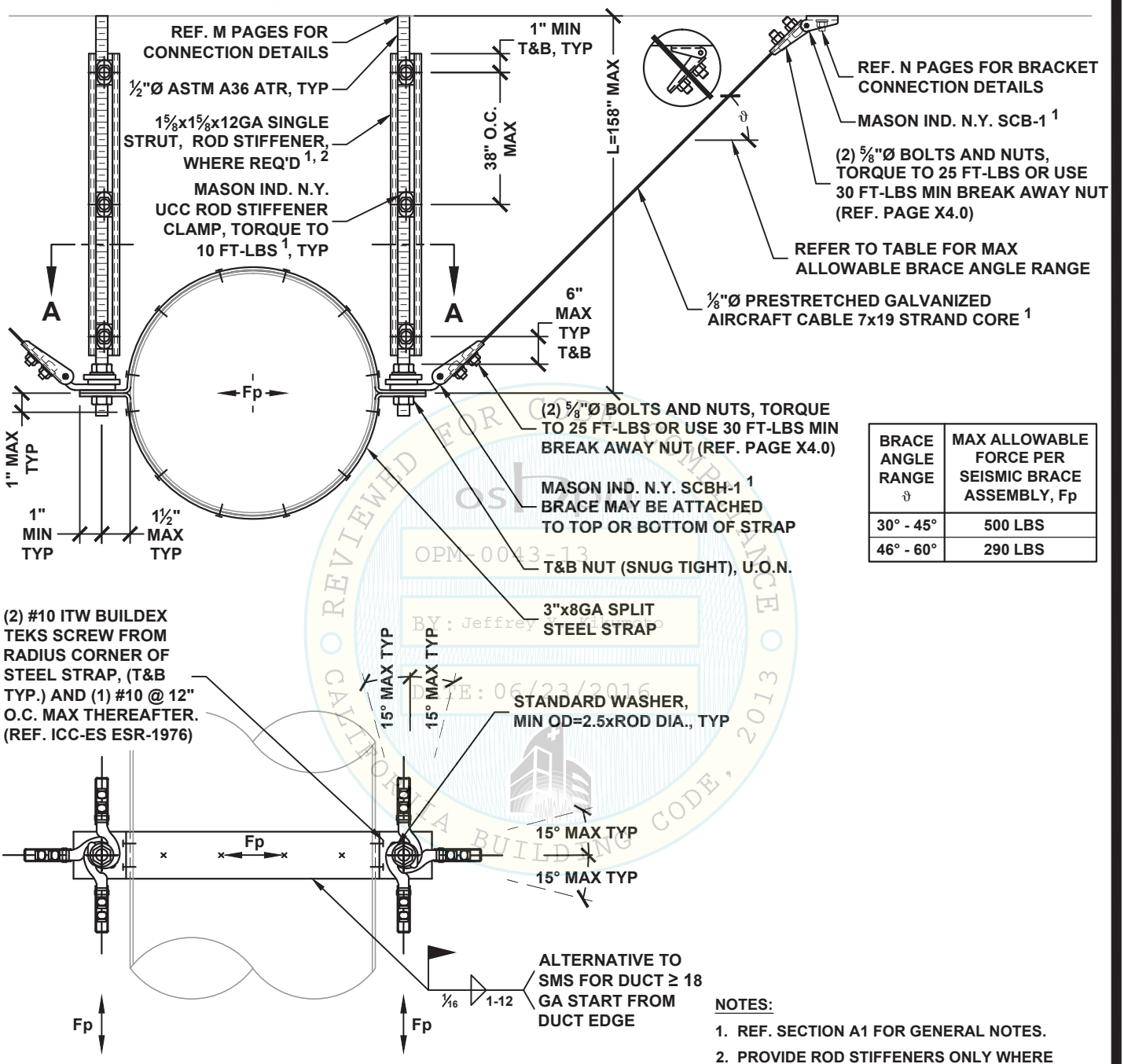

BRACE ANGLE RANGE ϑ	MAX ALLOWABLE FORCE PER SEISMIC BRACE ASSEMBLY, Fp
30° - 45°	500 LBS
46° - 60°	290 LBS

VIEW A-A

NOTES:

1. REF. SECTION A1 FOR GENERAL NOTES.
2. PROVIDE ROD STIFFENERS ONLY WHERE SEISMIC BRACKETS ARE ATTACHED TO THE ROD AND ROD LENGTH (L) EXCEEDS 25". REF. APPROPRIATE M10 PAGES FOR DETAIL.

REVIEWED FOR CODE COMPLIANCE
OSHPD
OPM-0043-13
BY: Jeffrey Kikumoto
DATE: 06/23/2016
CALIFORNIA BUILDING CODE, 2013

MASON WEST, INC.
1601 E. Miraloma Ave. Placentia, CA 92870
TEL (714) 630 - 0701, www.masonwest.com

Jiefu "Jeff" Zhang, SE
California SE No. S5270

PAGE
D6.22

HANGER ROD DIAMETER = 3/8"	ROUND DUCT X-PATTERN SEISMIC CABLE BRACING SYSTEM 30 PLF MAX	KIT OPTIONS TC0X

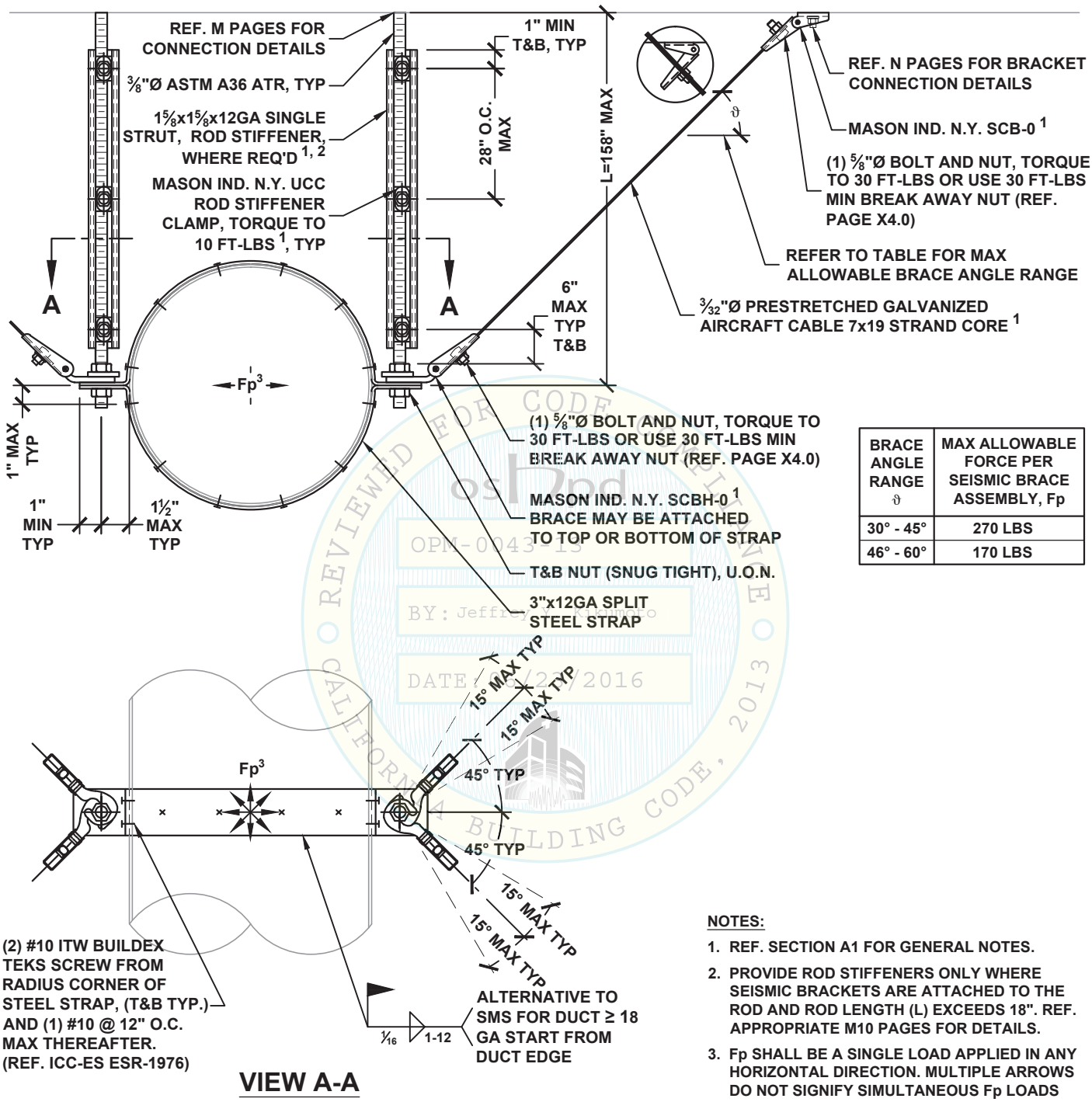

BRACE ANGLE RANGE ϑ	MAX ALLOWABLE FORCE PER SEISMIC BRACE ASSEMBLY, Fp
30° - 45°	270 LBS
46° - 60°	170 LBS

VIEW A-A

NOTES:

1. REF. SECTION A1 FOR GENERAL NOTES.
2. PROVIDE ROD STIFFENERS ONLY WHERE SEISMIC BRACKETS ARE ATTACHED TO THE ROD AND ROD LENGTH (L) EXCEEDS 18". REF. APPROPRIATE M10 PAGES FOR DETAILS.
3. Fp SHALL BE A SINGLE LOAD APPLIED IN ANY HORIZONTAL DIRECTION. MULTIPLE ARROWS DO NOT SIGNIFY SIMULTANEOUS Fp LOADS ACTING AT ONE TIME.

REVIEWED FOR CODE COMPLIANCE
OSHPD
OPM-0043-13
BY: Jeffrey Kikumoto
DATE: 06/23/2016
CALIFORNIA BUILDING CODE, 2013

MASON WEST, INC.
1601 E. Miraloma Ave. Placentia, CA 92870
TEL (714) 630 - 0701, www.masonwest.com

Jiefu "Jeff" Zhang, SE
California SE No. S5270

PAGE
D7.10

HANGER ROD DIAMETER = ½"	ROUND DUCT X-PATTERN SEISMIC CABLE BRACING SYSTEM 30 PLF MAX	KIT OPTIONS TC1X

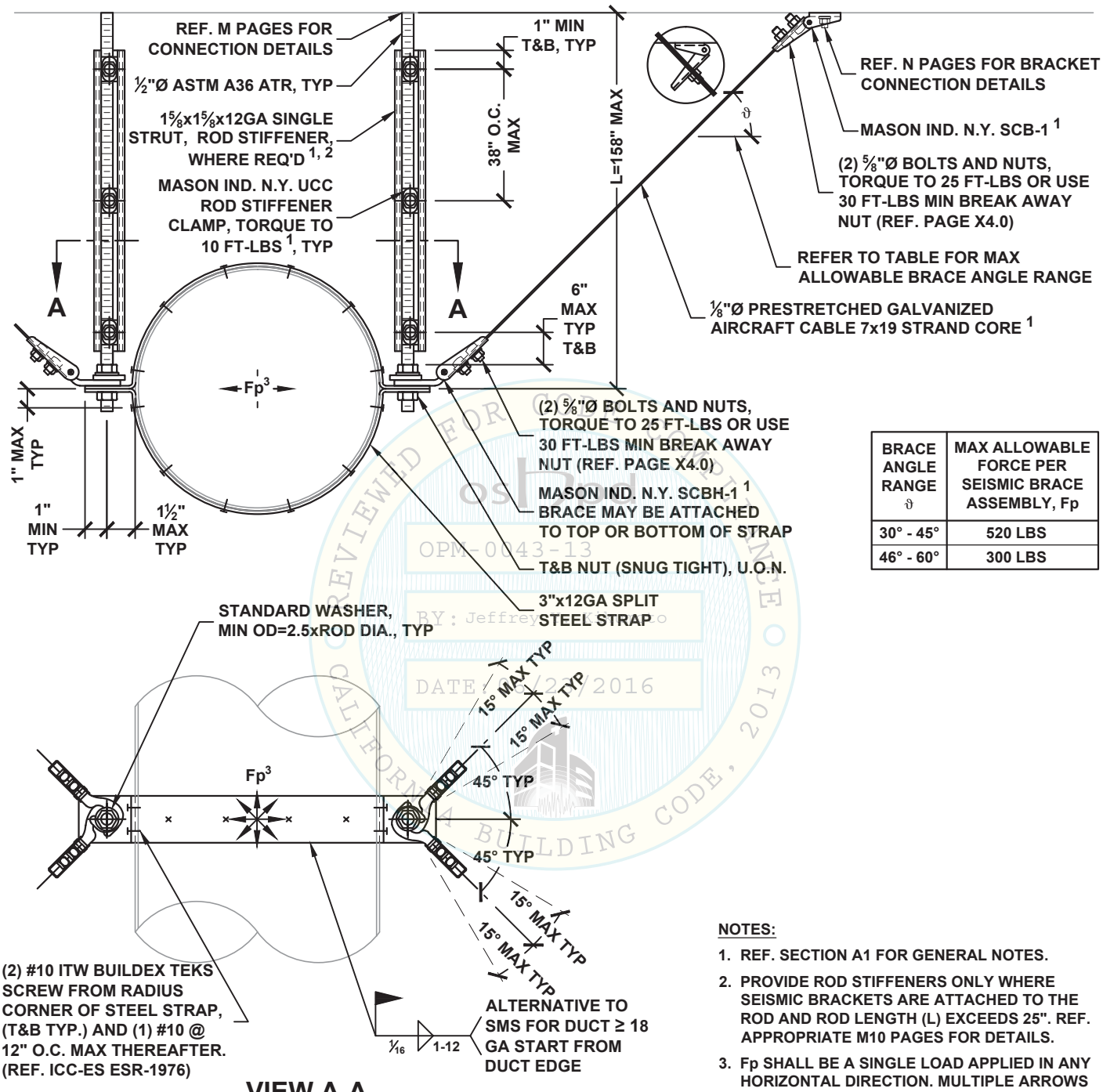

VIEW A-A

BRACE ANGLE RANGE ϑ	MAX ALLOWABLE FORCE PER SEISMIC BRACE ASSEMBLY, Fp
30° - 45°	520 LBS
46° - 60°	300 LBS

NOTES:

1. REF. SECTION A1 FOR GENERAL NOTES.
2. PROVIDE ROD STIFFENERS ONLY WHERE SEISMIC BRACKETS ARE ATTACHED TO THE ROD AND ROD LENGTH (L) EXCEEDS 25". REF. APPROPRIATE M10 PAGES FOR DETAILS.
3. Fp SHALL BE A SINGLE LOAD APPLIED IN ANY HORIZONTAL DIRECTION. MULTIPLE ARROWS DO NOT SIGNIFY SIMULTANEOUS Fp LOADS ACTING AT ONE TIME.

REVIEWED FOR CODE COMPLIANCE
OSHPD
OPM-0043-13
BY: Jeffrey Kikumoto
DATE: 06/23/2016
CALIFORNIA BUILDING CODE, 2013

MASON WEST, INC.
1601 E. Miraloma Ave. Placentia, CA 92870
TEL (714) 630 - 0701, www.masonwest.com

Jiefu "Jeff" Zhang, SE
California SE No. S5270

PAGE
D7.11

HANGER ROD DIAMETER = 5/8"	ROUND DUCT X-PATTERN SEISMIC CABLE BRACING SYSTEM 60 PLF MAX	KIT OPTIONS TC1X

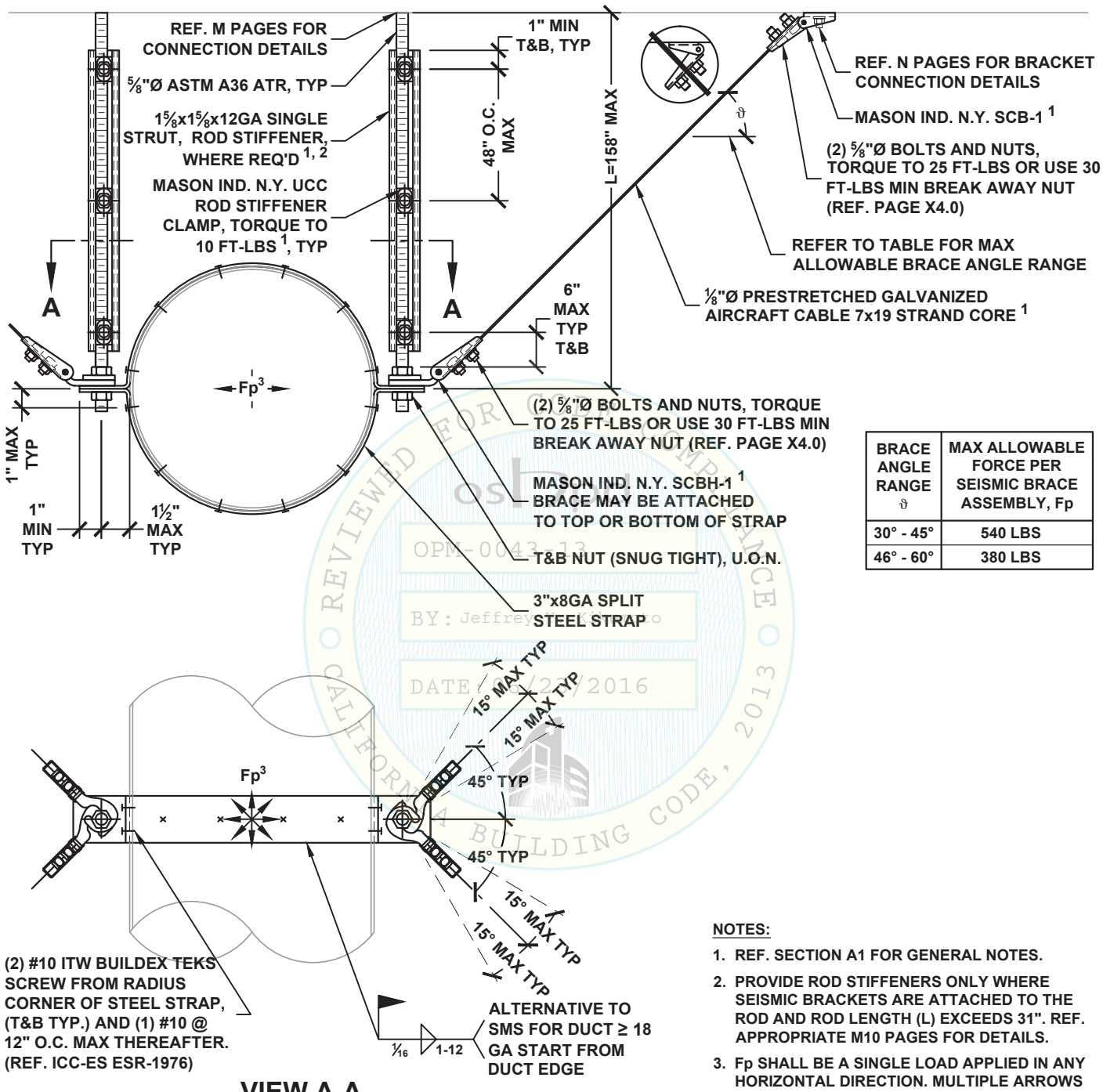

BRACE ANGLE RANGE ϑ	MAX ALLOWABLE FORCE PER SEISMIC BRACE ASSEMBLY, Fp
30° - 45°	540 LBS
46° - 60°	380 LBS

VIEW A-A

NOTES:

1. REF. SECTION A1 FOR GENERAL NOTES.
2. PROVIDE ROD STIFFENERS ONLY WHERE SEISMIC BRACKETS ARE ATTACHED TO THE ROD AND ROD LENGTH (L) EXCEEDS 31". REF. APPROPRIATE M10 PAGES FOR DETAILS.
3. Fp SHALL BE A SINGLE LOAD APPLIED IN ANY HORIZONTAL DIRECTION. MULTIPLE ARROWS DO NOT SIGNIFY SIMULTANEOUS Fp LOADS ACTING AT ONE TIME.

REVIEWED FOR CODE COMPLIANCE
OSHPD
OPM-0043-13
BY: Jeffrey Kikumoto
DATE: 06/23/2016
CALIFORNIA BUILDING CODE, 2013

MASON WEST, INC.
1601 E. Miraloma Ave. Placentia, CA 92870
TEL (714) 630 - 0701, www.masonwest.com

Jiefu "Jeff" Zhang, SE
California SE No. S5270

PAGE
D7.12

HANGER ROD DIAMETER = ⅜"	FACTORY-BUILT VENT DUCT TRANSVERSE SEISMIC CABLE BRACING SYSTEM 30 PLF MAX	KIT OPTIONS TC0T

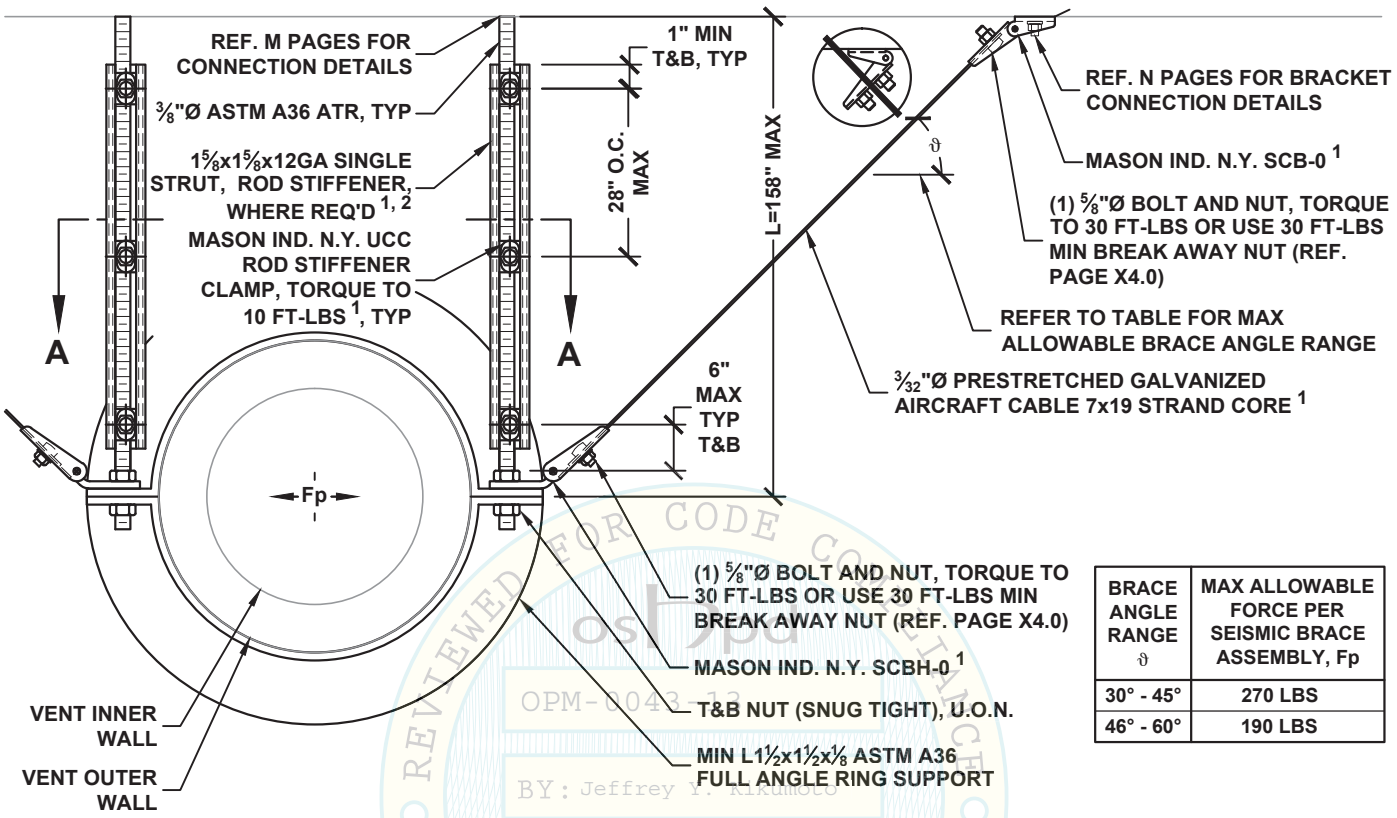

BRACE ANGLE RANGE ϑ	MAX ALLOWABLE FORCE PER SEISMIC BRACE ASSEMBLY, Fp
30° - 45°	270 LBS
46° - 60°	190 LBS

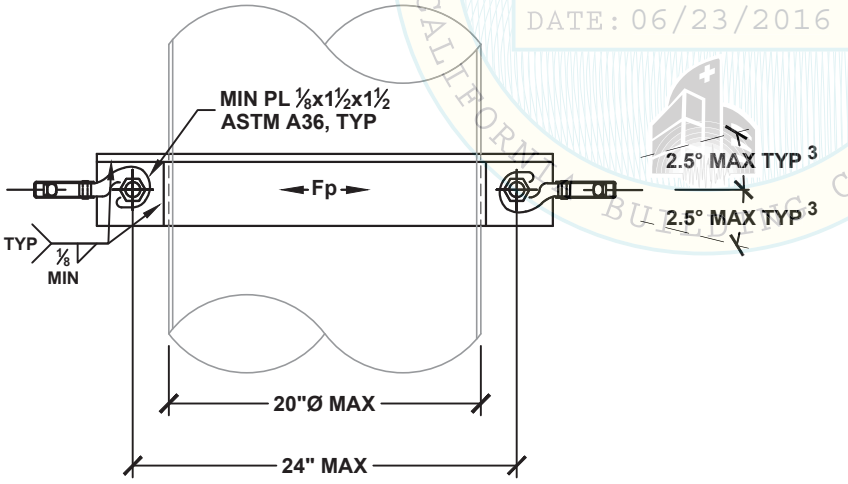

VIEW A-A

REVIEWED FOR CODE COMPLIANCE
OSHPD
OPM-0043-13
BY: Jeffrey T. Kikumoto
DATE: 06/23/2016
CALIFORNIA BUILDING CODE, 2013

NOTES:

1. REF. SECTION A1 FOR GENERAL NOTES.
2. PROVIDE ROD STIFFENERS ONLY WHERE SEISMIC BRACKETS ARE ATTACHED TO THE ROD AND ROD LENGTH (L) EXCEEDS 18". REF. APPROPRIATE M10 PAGES FOR DETAILS.
3. ANGLE MAY BE INCREASED TO 15°, REF. PAGE A5.0.

MASON WEST, INC.
1601 E. Miraloma Ave. Placentia, CA 92870
TEL (714) 630 - 0701, www.masonwest.com

Jiefu "Jeff" Zhang, SE
California SE No. S5270

PAGE
D8.10

HANGER ROD DIAMETER = 3/8"	FACTORY-BUILT VENT DUCT LONGITUDINAL SEISMIC CABLE BRACING SYSTEM 30 PLF MAX	KIT OPTIONS TC0L

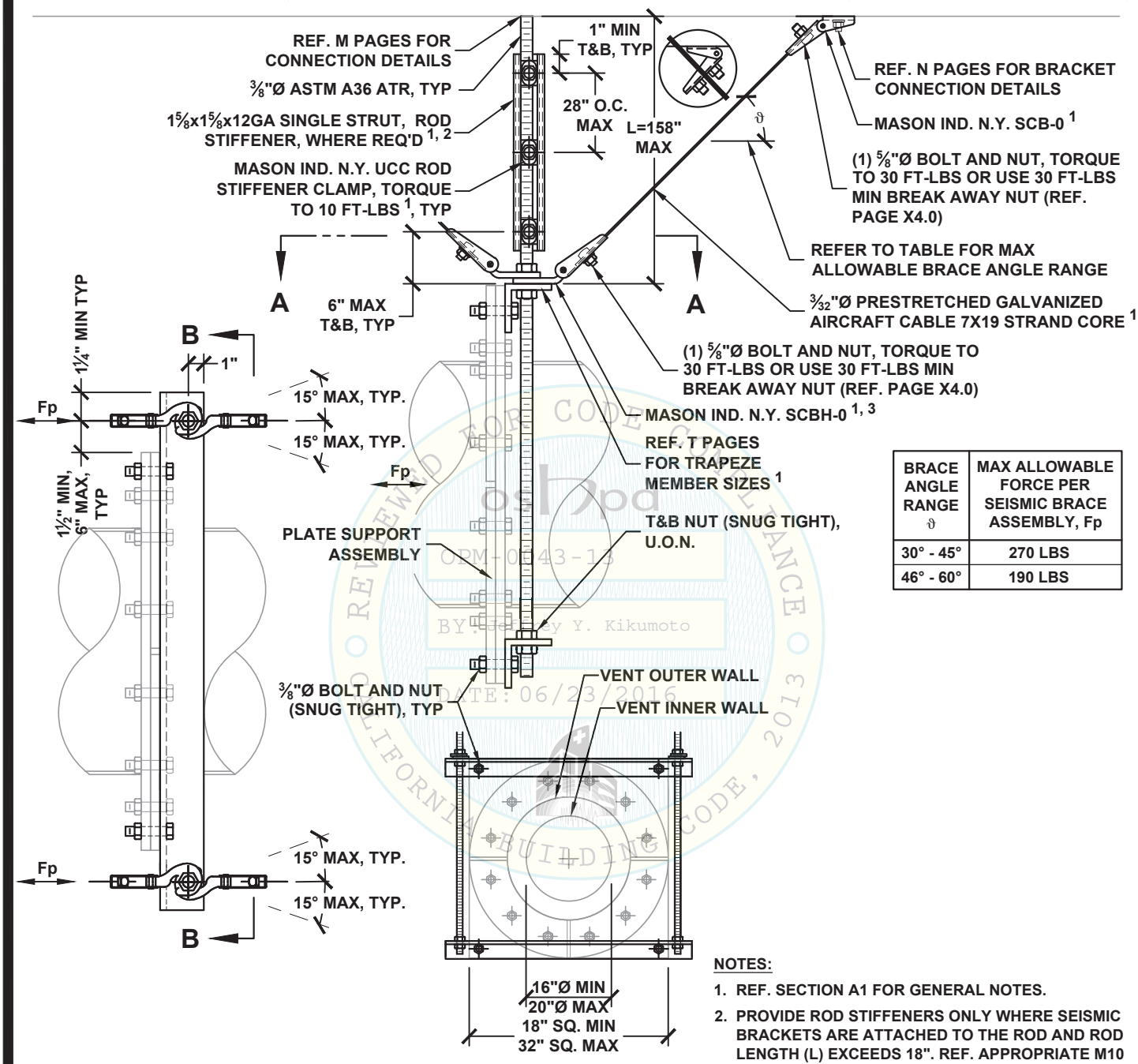

BRACE ANGLE RANGE ϑ	MAX ALLOWABLE FORCE PER SEISMIC BRACE ASSEMBLY, Fp
30° - 45°	270 LBS
46° - 60°	190 LBS

VIEW A-A

VIEW B-B

NOTES:

1. REF. SECTION A1 FOR GENERAL NOTES.
2. PROVIDE ROD STIFFENERS ONLY WHERE SEISMIC BRACKETS ARE ATTACHED TO THE ROD AND ROD LENGTH (L) EXCEEDS 18". REF. APPROPRIATE M10 PAGES FOR DETAILS.
3. REF. PAGE A6.0 - A6.2 FOR ALTERNATE ARRANGEMENTS OF SEISMIC BRACES AND ANGLE MEMBER AS TRAPEZE.

REVIEWED FOR CODE COMPLIANCE
OSHPD
OPM-0043-13
BY: Jeffrey Y. Kikumoto
DATE: 06/23/2016
CALIFORNIA BUILDING CODE, 2013

MASON WEST, INC.
1601 E. Miraloma Ave. Placentia, CA 92870
TEL (714) 630 - 0701, www.masonwest.com

Jiefu "Jeff" Zhang, SE
California SE No. S5270

HANGER ROD DIAMETER = 3/8"	FACTORY-BUILT VENT DUCT ALL-DIRECTIONAL SEISMIC CABLE BRACING SYSTEM 30 PLF MAX	KIT OPTIONS TC0A

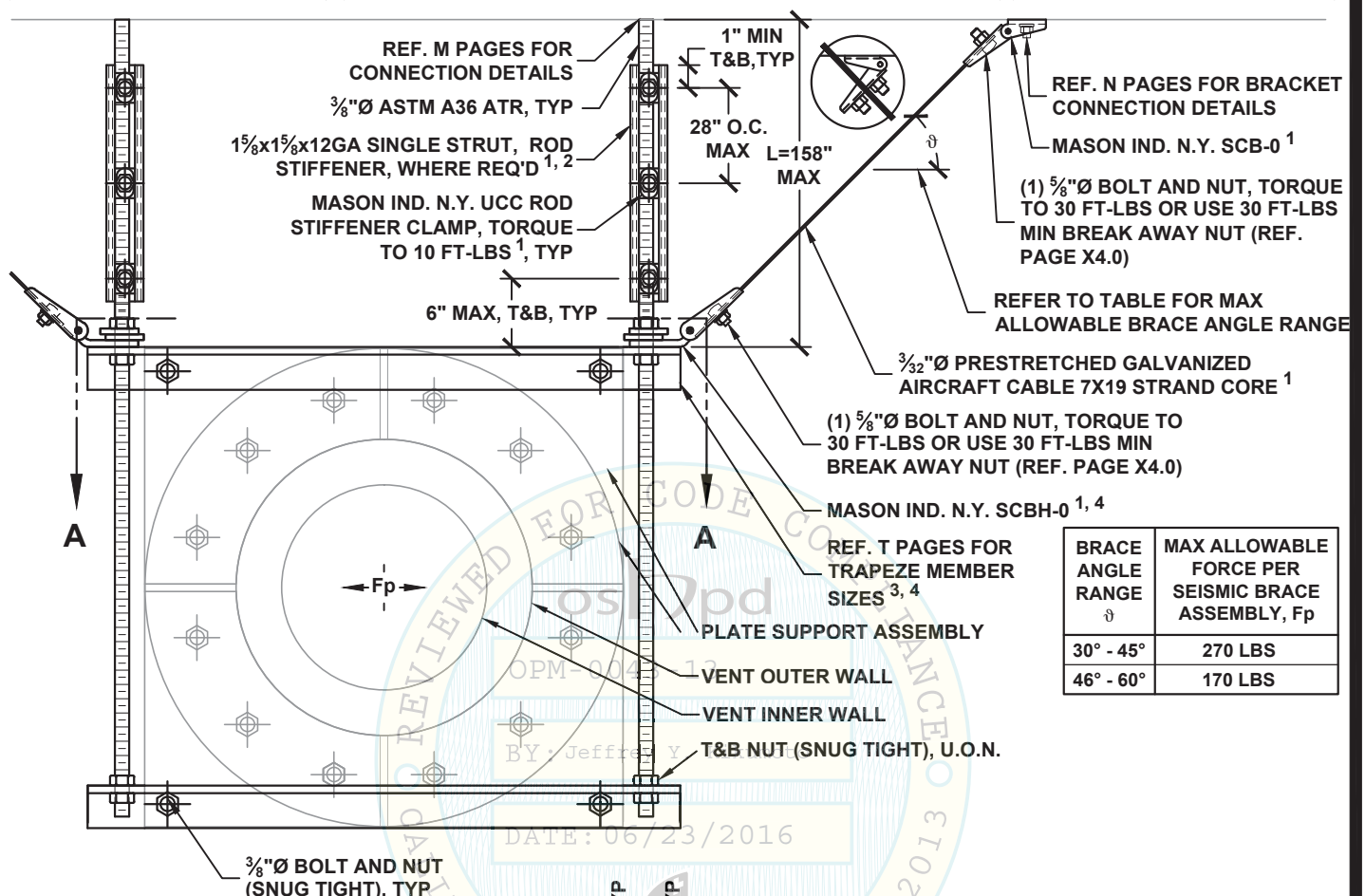

BRACE ANGLE RANGE ϑ	MAX ALLOWABLE FORCE PER SEISMIC BRACE ASSEMBLY, Fp
30° - 45°	270 LBS
46° - 60°	170 LBS

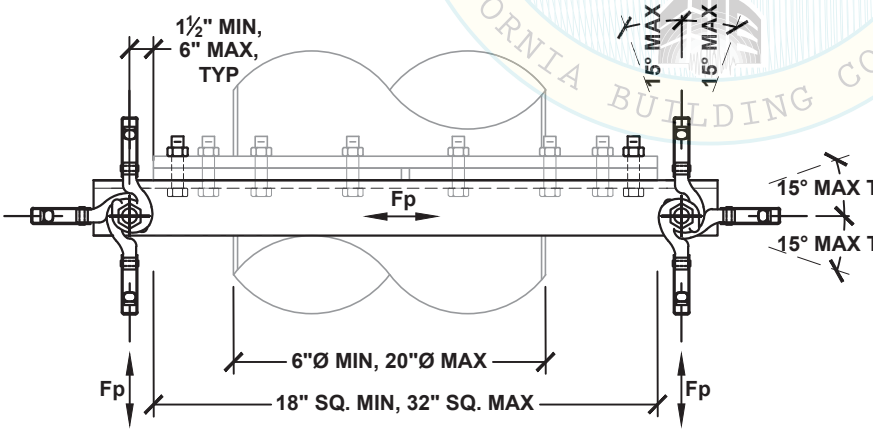

VIEW A-A

NOTES:

1. REF. SECTION A1 FOR GENERAL NOTES.
2. PROVIDE ROD STIFFENERS ONLY WHERE SEISMIC BRACKETS ARE ATTACHED TO THE ROD AND ROD LENGTH (L) EXCEEDS 18". REF. APPROPRIATE M10 PAGES FOR DETAILS.
3. TRAPEZE MEMBERS TO BE STEEL ANGLE ONLY.
4. REF. PAGE A6.0 - A6.2 FOR ALTERNATE ARRANGEMENTS OF SEISMIC BRACES AND ANGLE MEMBER AS TRAPEZE.

REVIEWED FOR CODE COMPLIANCE CALIFORNIA BUILDING CODE, 2013
OSHPD
OPM-0043-13
BY: Jeffrey Kikumoto
DATE: 06/23/2016

MASON WEST, INC.
1601 E. Miraloma Ave. Placentia, CA 92870
TEL (714) 630 - 0701, www.masonwest.com

Jiefu "Jeff" Zhang, SE
California SE No. S5270

PAGE
D8.12

HANGER ROD DIAMETER = ½"	FACTORY-BUILT VENT DUCT TRANSVERSE SEISMIC CABLE BRACING SYSTEM 60 PLF MAX	KIT OPTIONS TC1T

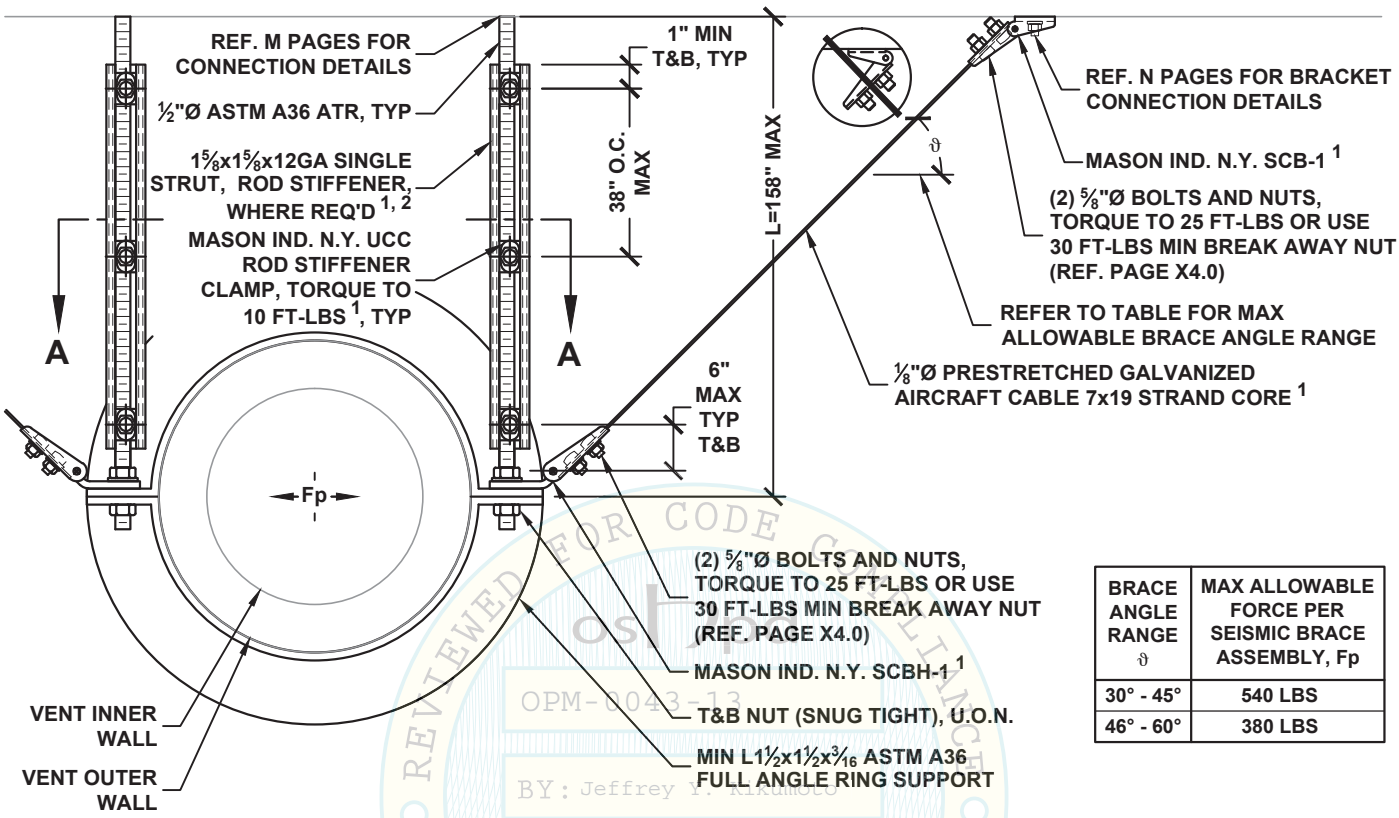

BRACE ANGLE RANGE ϑ	MAX ALLOWABLE FORCE PER SEISMIC BRACE ASSEMBLY, Fp
30° - 45°	540 LBS
46° - 60°	380 LBS

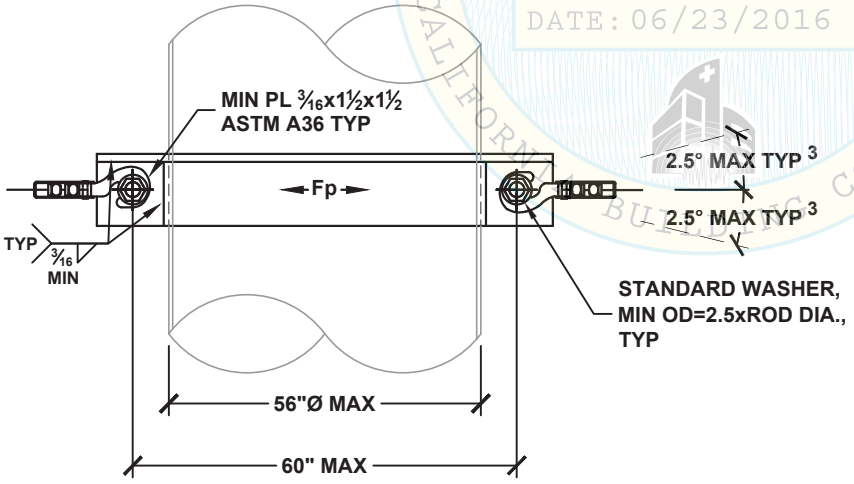

VIEW A-A

NOTES:

1. REF. SECTION A1 FOR GENERAL NOTES.
2. PROVIDE ROD STIFFENERS ONLY WHERE SEISMIC BRACKETS ARE ATTACHED TO THE ROD AND ROD LENGTH (L) EXCEEDS 25". REF. APPROPRIATE M10 PAGES FOR DETAILS.
3. ANGLE MAY BE INCREASED TO 15°, REF. PAGE A5.0.

OSHPD REVIEWED FOR CODE COMPLIANCE CALIFORNIA BUILDING CODE, 2013
OPM-0043-13
BY: Jeffrey T. Kikumoto
DATE: 06/23/2016

MASON WEST, INC.
1601 E. Miraloma Ave. Placentia, CA 92870
TEL (714) 630 - 0701, www.masonwest.com

Jiefu "Jeff" Zhang, SE
California SE No. S5270

PAGE
D8.20

HANGER ROD DIAMETER = ½"	FACTORY-BUILT VENT DUCT LONGITUDINAL SEISMIC CABLE BRACING SYSTEM 60 PLF MAX	KIT OPTIONS TC1L

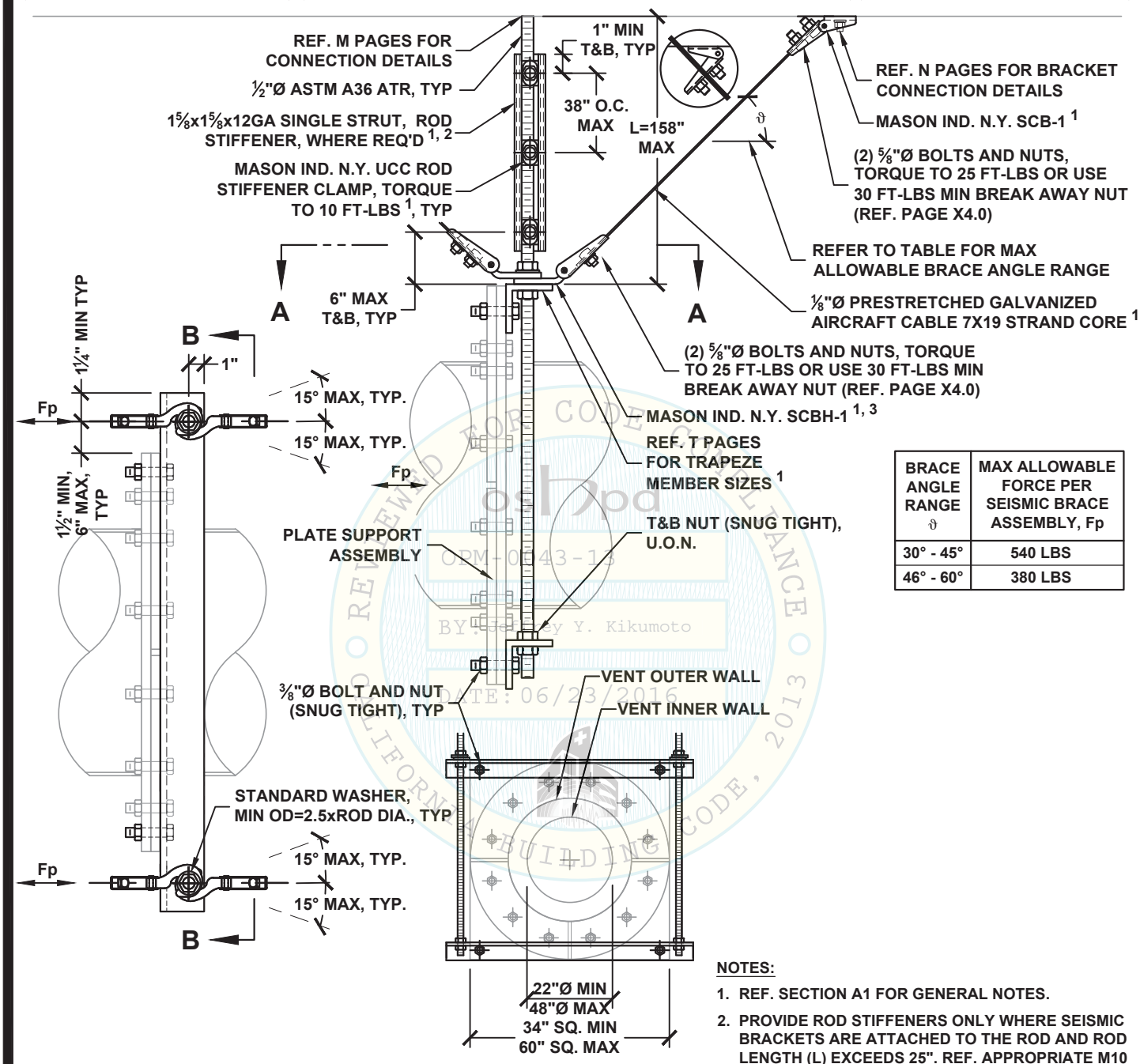

BRACE ANGLE RANGE ϑ	MAX ALLOWABLE FORCE PER SEISMIC BRACE ASSEMBLY, Fp
30° - 45°	540 LBS
46° - 60°	380 LBS

VIEW A-A

VIEW B-B

NOTES:

1. REF. SECTION A1 FOR GENERAL NOTES.
2. PROVIDE ROD STIFFENERS ONLY WHERE SEISMIC BRACKETS ARE ATTACHED TO THE ROD AND ROD LENGTH (L) EXCEEDS 25". REF. APPROPRIATE M10 PAGES FOR DETAILS.
3. REF. PAGE A6.0 - A6.2 FOR ALTERNATE ARRANGEMENTS OF SEISMIC BRACES AND ANGLE MEMBER AS TRAPEZE.

MASON WEST, INC.
1601 E. Miraloma Ave. Placentia, CA 92870
TEL (714) 630 - 0701, www.masonwest.com

Jiefu "Jeff" Zhang, SE
California SE No. S5270

PAGE **D8.21**

OSHPD REVIEWED FOR CODE COMPLIANCE
OPM-0043-13
BY: Jeffrey Y. Kikumoto
DATE: 06/23/2016
CALIFORNIA BUILDING CODE, 2013

HANGER ROD DIAMETER = ½"	FACTORY-BUILT VENT DUCT ALL-DIRECTIONAL SEISMIC CABLE BRACING SYSTEM 60 PLF MAX	KIT OPTIONS TC1A

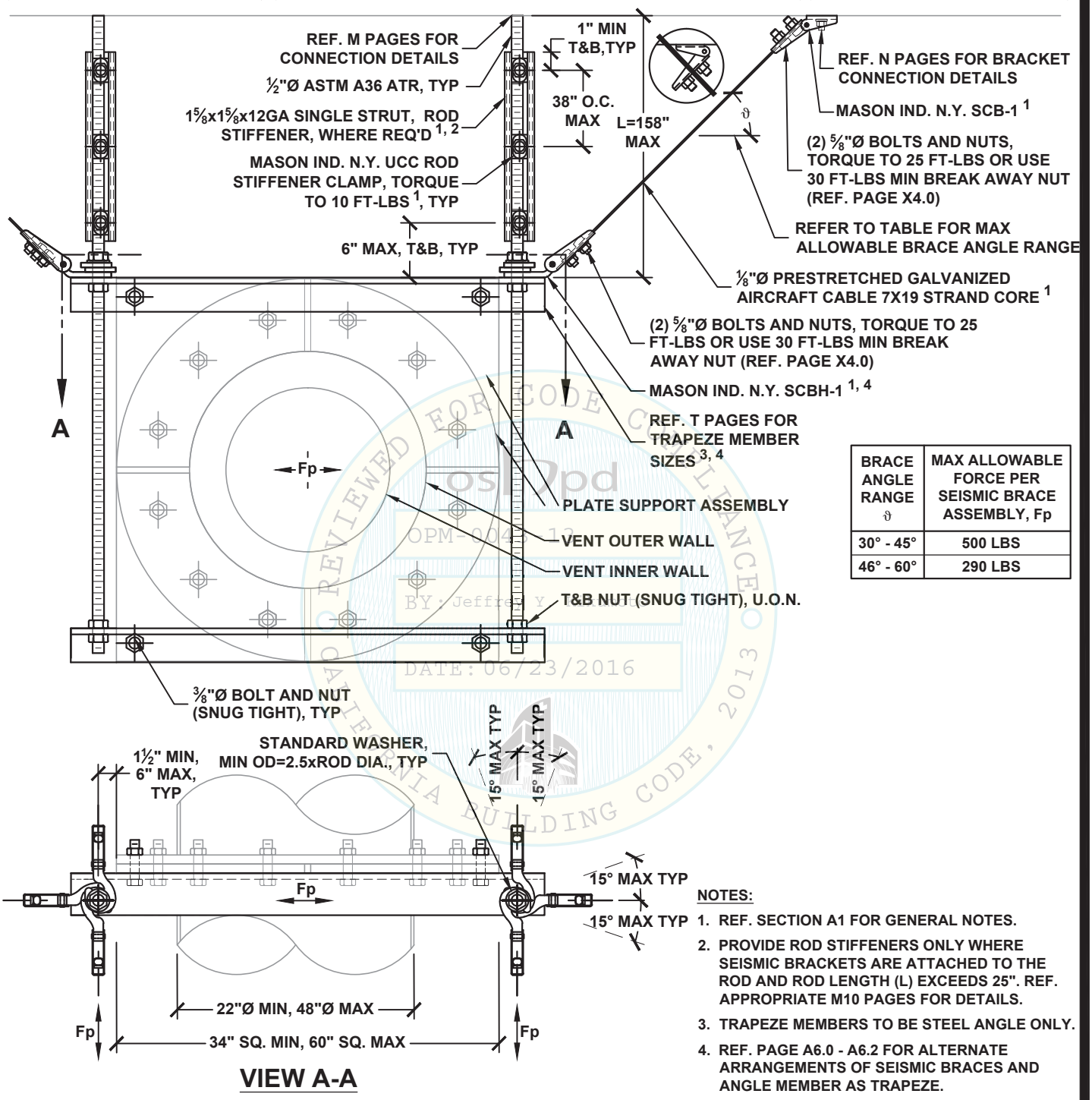

VIEW A-A

BRACE ANGLE RANGE ϑ	MAX ALLOWABLE FORCE PER SEISMIC BRACE ASSEMBLY, Fp
30° - 45°	500 LBS
46° - 60°	290 LBS

NOTES:

1. REF. SECTION A1 FOR GENERAL NOTES.
2. PROVIDE ROD STIFFENERS ONLY WHERE SEISMIC BRACKETS ARE ATTACHED TO THE ROD AND ROD LENGTH (L) EXCEEDS 25". REF. APPROPRIATE M10 PAGES FOR DETAILS.
3. TRAPEZE MEMBERS TO BE STEEL ANGLE ONLY.
4. REF. PAGE A6.0 - A6.2 FOR ALTERNATE ARRANGEMENTS OF SEISMIC BRACES AND ANGLE MEMBER AS TRAPEZE.

REVIEWED FOR CODE COMPLIANCE
OSHPD
OPM-0043-13
BY: Jeffrey Y. Kikumoto
DATE: 06/23/2016
CALIFORNIA BUILDING CODE, 2013

MASON WEST, INC.
1601 E. Miraloma Ave. Placentia, CA 92870
TEL (714) 630 - 0701, www.masonwest.com

Jiefu "Jeff" Zhang, SE
California SE No. S5270

PAGE
D8.22

HANGER ROD DIAMETER = 3/8"

IN-LINE DUCT DEVICE SEISMIC SOLID BRACING SYSTEM 250 LB MAX

KIT OPTIONS
TS12A
TS1220A
TSH312A
TSH320A

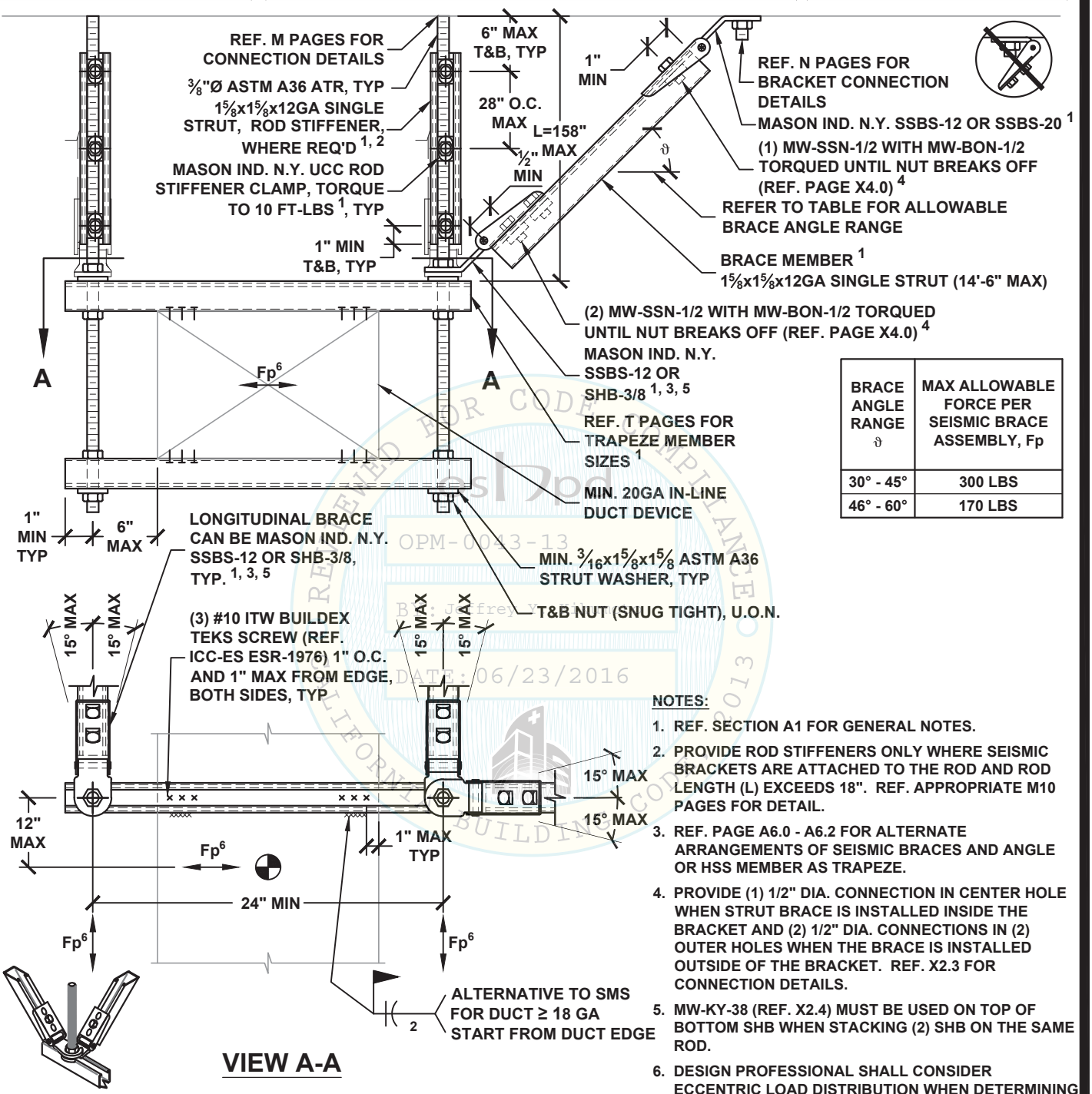

BRACE ANGLE RANGE ϑ	MAX ALLOWABLE FORCE PER SEISMIC BRACE ASSEMBLY, Fp
30° - 45°	300 LBS
46° - 60°	170 LBS

VIEW A-A

SHB OPTION

NOTES:

1. REF. SECTION A1 FOR GENERAL NOTES.
2. PROVIDE ROD STIFFENERS ONLY WHERE SEISMIC BRACKETS ARE ATTACHED TO THE ROD AND ROD LENGTH (L) EXCEEDS 18". REF. APPROPRIATE M10 PAGES FOR DETAIL.
3. REF. PAGE A6.0 - A6.2 FOR ALTERNATE ARRANGEMENTS OF SEISMIC BRACES AND ANGLE OR HSS MEMBER AS TRAPEZE.
4. PROVIDE (1) 1/2" DIA. CONNECTION IN CENTER HOLE WHEN STRUT BRACE IS INSTALLED INSIDE THE BRACKET AND (2) 1/2" DIA. CONNECTIONS IN (2) OUTER HOLES WHEN THE BRACE IS INSTALLED OUTSIDE OF THE BRACKET. REF. X2.3 FOR CONNECTION DETAILS.
5. MW-KY-38 (REF. X2.4) MUST BE USED ON TOP OF BOTTOM SHB WHEN STACKING (2) SHB ON THE SAME ROD.
6. DESIGN PROFESSIONAL SHALL CONSIDER ECCENTRIC LOAD DISTRIBUTION WHEN DETERMINING THE Fp VALUE USED IN DESIGN.

REVIEWED FOR CODE COMPLIANCE
OPM-0043-13
By: Jeffrey Kikumoto
DATE: 06/23/2016
CALIFORNIA BUILDING CODE 2013

MASON WEST, INC.
1601 E. Miraloma Ave. Placentia, CA 92870
TEL (714) 630 - 0701, www.masonwest.com

Jiefu "Jeff" Zhang, SE
California SE No. S5270

PAGE
D9.10

HANGER ROD DIAMETER = 3/8"

IN-LINE DUCT DEVICE SEISMIC SOLID BRACING SYSTEM 250 LB MAX

KIT OPTIONS
S12SE
S1220SE
SH312SE
SH320SE

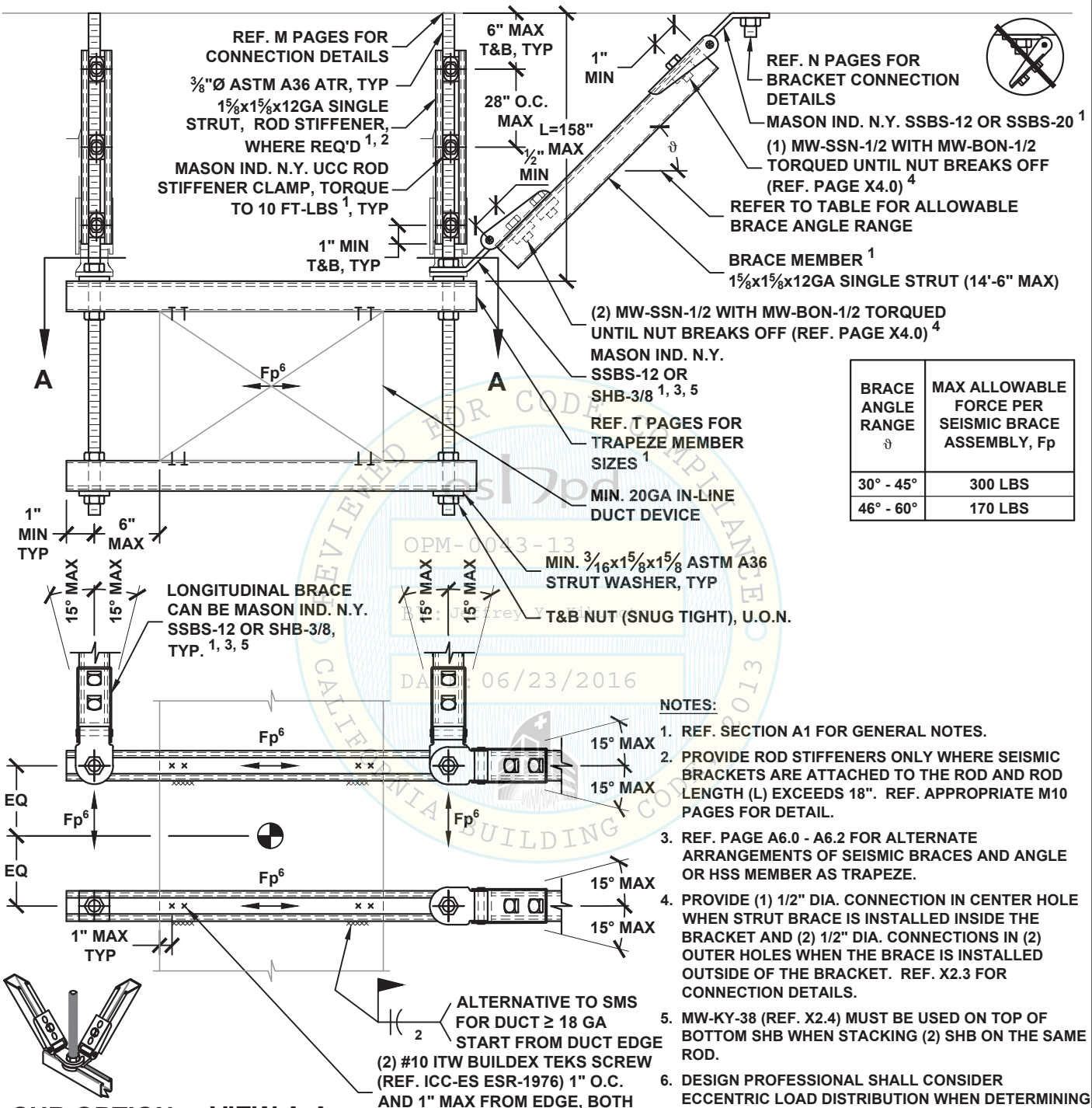

BRACE ANGLE RANGE ϑ	MAX ALLOWABLE FORCE PER SEISMIC BRACE ASSEMBLY, Fp
30° - 45°	300 LBS
46° - 60°	170 LBS

SHB OPTION **VIEW A-A**

NOTES:

1. REF. SECTION A1 FOR GENERAL NOTES.
2. PROVIDE ROD STIFFENERS ONLY WHERE SEISMIC BRACKETS ARE ATTACHED TO THE ROD AND ROD LENGTH (L) EXCEEDS 18". REF. APPROPRIATE M10 PAGES FOR DETAIL.
3. REF. PAGE A6.0 - A6.2 FOR ALTERNATE ARRANGEMENTS OF SEISMIC BRACES AND ANGLE OR HSS MEMBER AS TRAPEZE.
4. PROVIDE (1) 1/2" DIA. CONNECTION IN CENTER HOLE WHEN STRUT BRACE IS INSTALLED INSIDE THE BRACKET AND (2) 1/2" DIA. CONNECTIONS IN (2) OUTER HOLES WHEN THE BRACE IS INSTALLED OUTSIDE OF THE BRACKET. REF. X2.3 FOR CONNECTION DETAILS.
5. MW-KY-38 (REF. X2.4) MUST BE USED ON TOP OF BOTTOM SHB WHEN STACKING (2) SHB ON THE SAME ROD.
6. DESIGN PROFESSIONAL SHALL CONSIDER ECCENTRIC LOAD DISTRIBUTION WHEN DETERMINING THE Fp VALUE USED IN DESIGN.

OPM-0043-13 Reviewed for Code Compliance By: Jeffrey Kikumoto DATE: 06/23/2016 CALIFORNIA BUILDING CODE 2013

MASON WEST, INC.
1601 E. Miraloma Ave. Placentia, CA 92870
TEL (714) 630 - 0701, www.masonwest.com

Jiefu "Jeff" Zhang, SE
California SE No. S5270

PAGE
D9.11

HANGER ROD DIAMETER = ½"

IN-LINE DUCT DEVICE SEISMIC SOLID BRACING SYSTEM 1000 LB MAX

KIT OPTIONS
S12SE
S1220SE
SH412SE
SH420SE

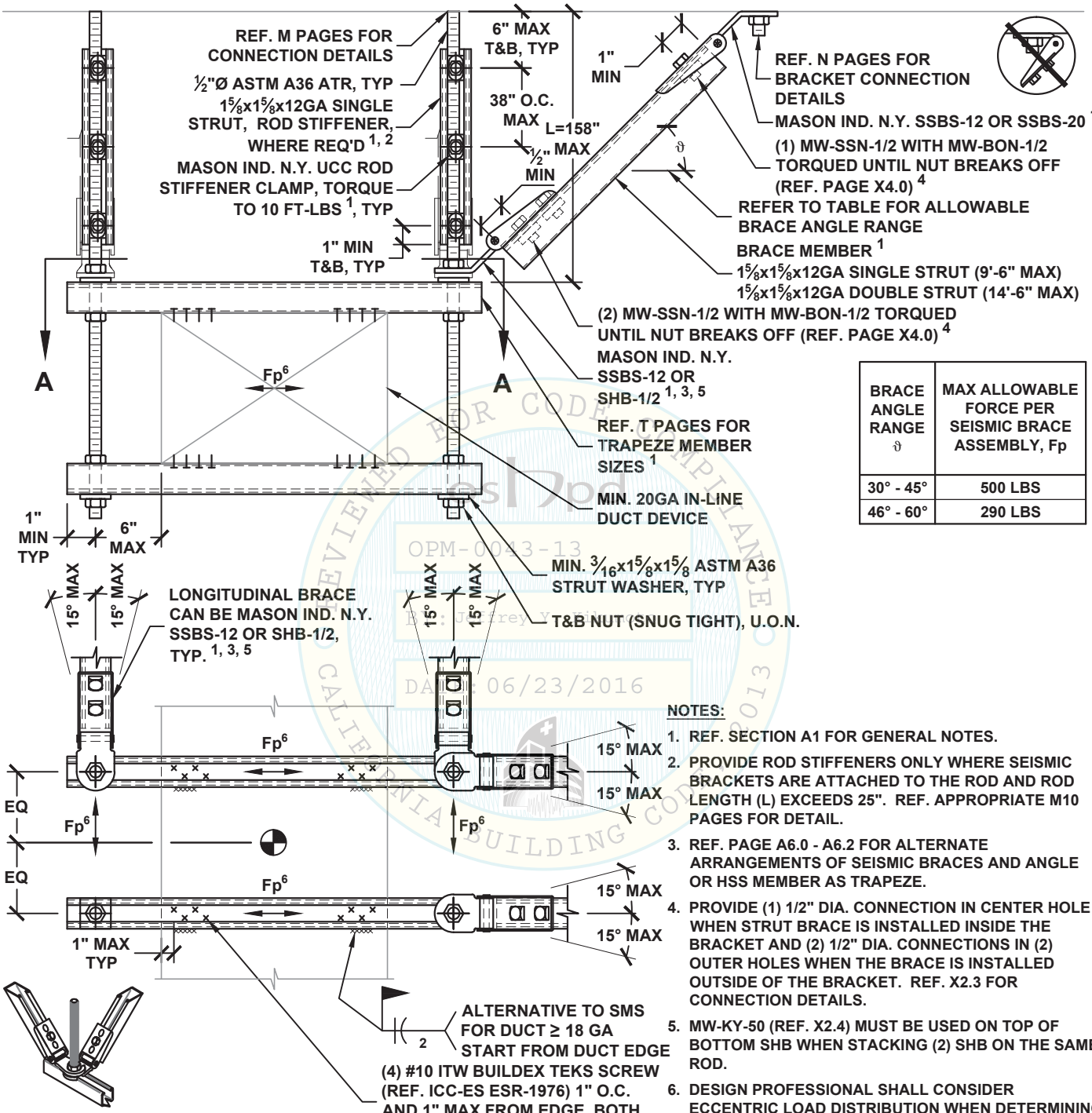

BRACE ANGLE RANGE ϑ	MAX ALLOWABLE FORCE PER SEISMIC BRACE ASSEMBLY, Fp
30° - 45°	500 LBS
46° - 60°	290 LBS

SHB OPTION **VIEW A-A**

NOTES:

1. REF. SECTION A1 FOR GENERAL NOTES.
2. PROVIDE ROD STIFFENERS ONLY WHERE SEISMIC BRACKETS ARE ATTACHED TO THE ROD AND ROD LENGTH (L) EXCEEDS 25". REF. APPROPRIATE M10 PAGES FOR DETAIL.
3. REF. PAGE A6.0 - A6.2 FOR ALTERNATE ARRANGEMENTS OF SEISMIC BRACES AND ANGLE OR HSS MEMBER AS TRAPEZE.
4. PROVIDE (1) 1/2" DIA. CONNECTION IN CENTER HOLE WHEN STRUT BRACE IS INSTALLED INSIDE THE BRACKET AND (2) 1/2" DIA. CONNECTIONS IN (2) OUTER HOLES WHEN THE BRACE IS INSTALLED OUTSIDE OF THE BRACKET. REF. X2.3 FOR CONNECTION DETAILS.
5. MW-KY-50 (REF. X2.4) MUST BE USED ON TOP OF BOTTOM SHB WHEN STACKING (2) SHB ON THE SAME ROD.
6. DESIGN PROFESSIONAL SHALL CONSIDER ECCENTRIC LOAD DISTRIBUTION WHEN DETERMINING THE Fp VALUE USED IN DESIGN.

REVIEWED FOR CODE COMPLIANCE CALIFORNIA BUILDING CODE 2013
OPM-0043-13
By: Jeffrey Kikumoto
DATE: 06/23/2016

MASON WEST, INC.
1601 E. Miraloma Ave. Placentia, CA 92870
TEL (714) 630 - 0701, www.masonwest.com

Jiefu "Jeff" Zhang, SE
California SE No. S5270

PAGE
D9.12

HANGER ROD DIAMETER = 5/8"

IN-LINE DUCT DEVICE SEISMIC SOLID BRACING SYSTEM 2000 LB MAX

KIT OPTIONS
S20SE
S2012SE
SH512SE
SH520SE

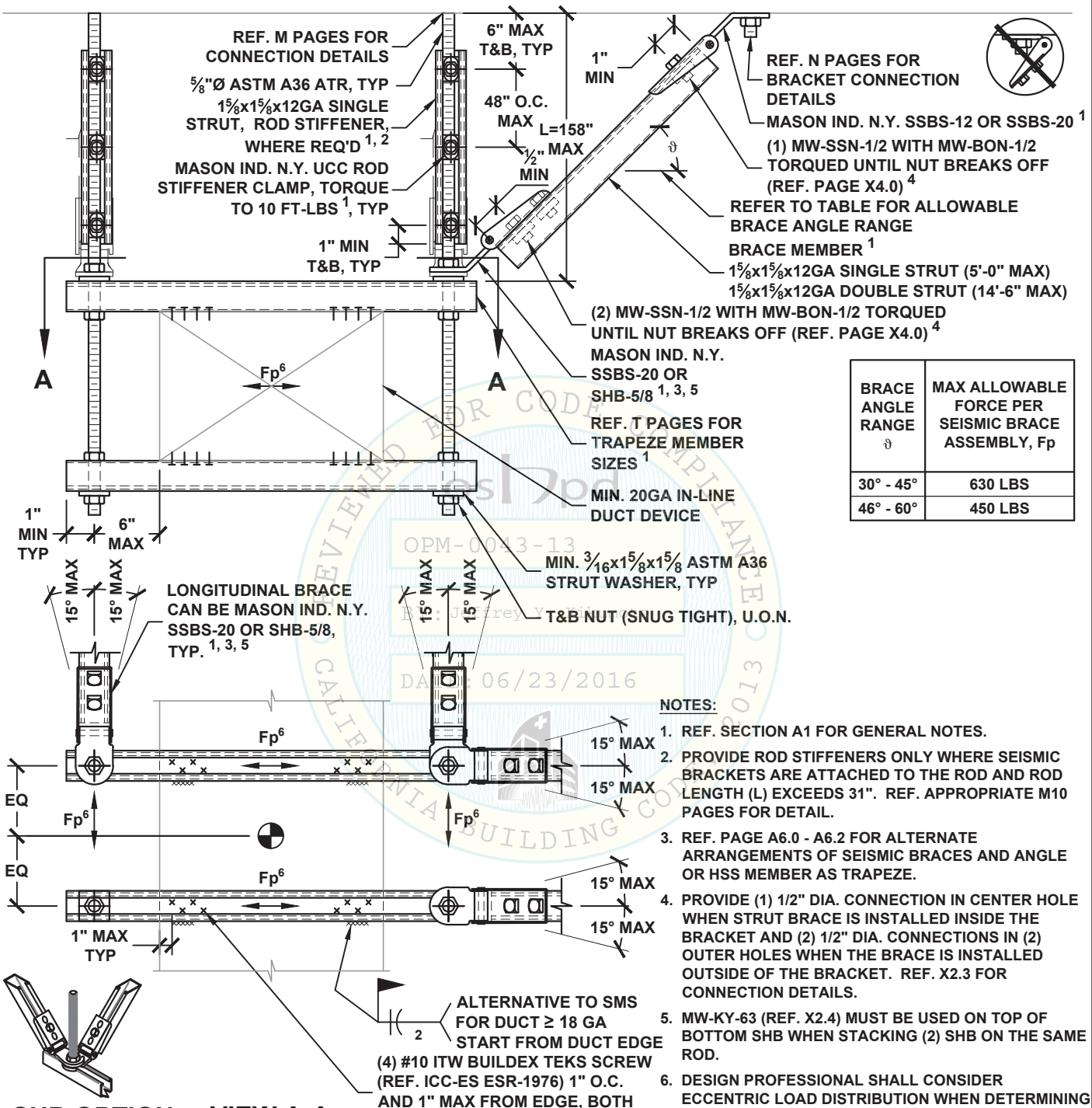

BRACE ANGLE RANGE ϑ	MAX ALLOWABLE FORCE PER SEISMIC BRACE ASSEMBLY, Fp
30° - 45°	630 LBS
46° - 60°	450 LBS

NOTES:

1. REF. SECTION A1 FOR GENERAL NOTES.
2. PROVIDE ROD STIFFENERS ONLY WHERE SEISMIC BRACKETS ARE ATTACHED TO THE ROD AND ROD LENGTH (L) EXCEEDS 31". REF. APPROPRIATE M10 PAGES FOR DETAIL.
3. REF. PAGE A6.0 - A6.2 FOR ALTERNATE ARRANGEMENTS OF SEISMIC BRACES AND ANGLE OR HSS MEMBER AS TRAPEZE.
4. PROVIDE (1) 1/2" DIA. CONNECTION IN CENTER HOLE WHEN STRUT BRACE IS INSTALLED INSIDE THE BRACKET AND (2) 1/2" DIA. CONNECTIONS IN (2) OUTER HOLES WHEN THE BRACE IS INSTALLED OUTSIDE OF THE BRACKET. REF. X2.3 FOR CONNECTION DETAILS.
5. MW-KY-63 (REF. X2.4) MUST BE USED ON TOP OF BOTTOM SHB WHEN STACKING (2) SHB ON THE SAME ROD.
6. DESIGN PROFESSIONAL SHALL CONSIDER ECCENTRIC LOAD DISTRIBUTION WHEN DETERMINING THE Fp VALUE USED IN DESIGN.

REVIEWED FOR CODE COMPLIANCE
OPM-0043-13
By: Jeffrey Kikumoto
DATE: 06/23/2016
CALIFORNIA BUILDING CODE 2013

MASON WEST, INC.
1601 E. Miraloma Ave. Placentia, CA 92870
TEL (714) 630 - 0701, www.masonwest.com

Jiefu "Jeff" Zhang, SE
California SE No. S5270

PAGE
D9.13

HANGER ROD DIAMETER = 3/8"	IN-LINE DUCT DEVICE SEISMIC CABLE BRACING SYSTEM 250 LB MAX	KIT OPTIONS C0X

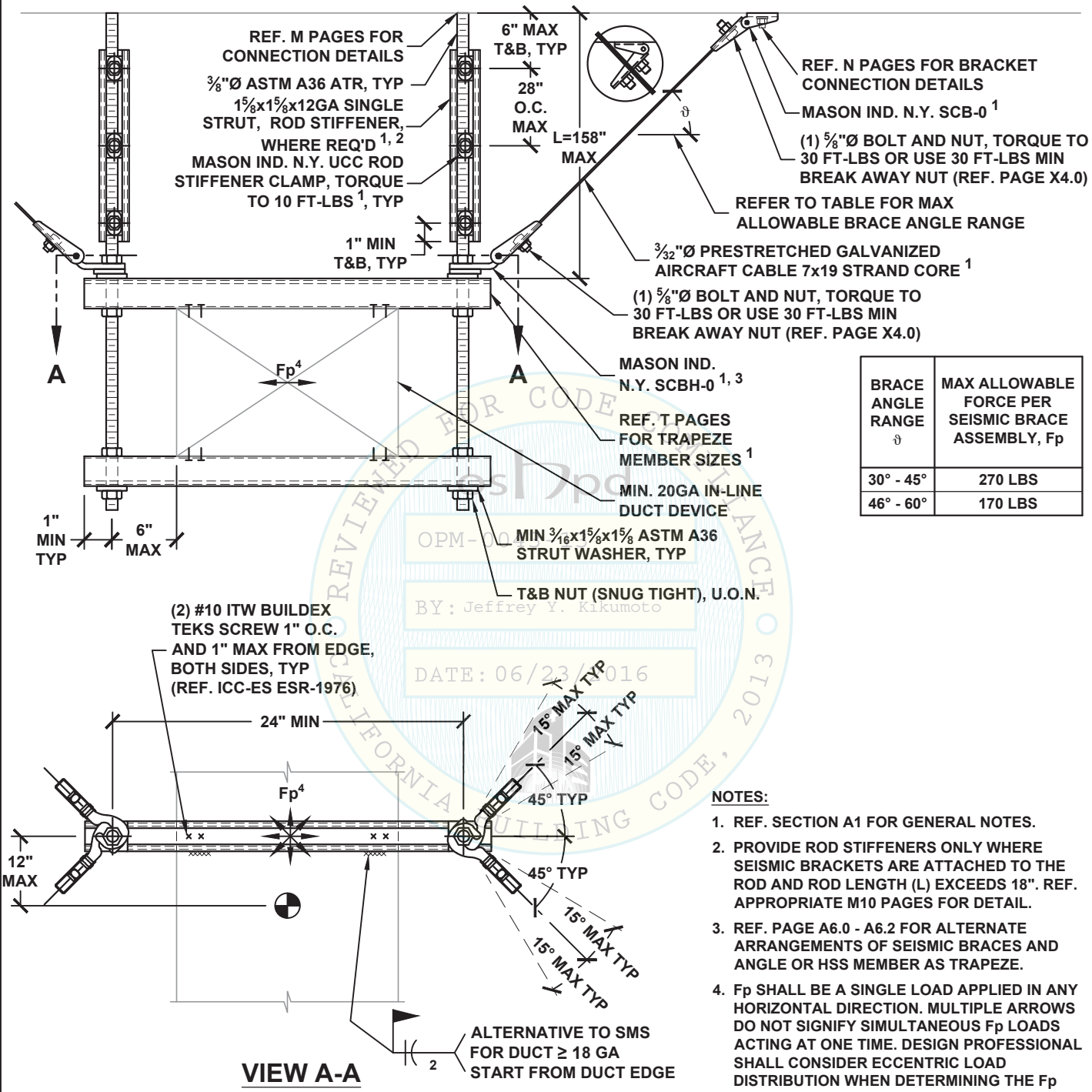

VIEW A-A

BRACE ANGLE RANGE ϑ	MAX ALLOWABLE FORCE PER SEISMIC BRACE ASSEMBLY, Fp
30° - 45°	270 LBS
46° - 60°	170 LBS

NOTES:

1. REF. SECTION A1 FOR GENERAL NOTES.
2. PROVIDE ROD STIFFENERS ONLY WHERE SEISMIC BRACKETS ARE ATTACHED TO THE ROD AND ROD LENGTH (L) EXCEEDS 18". REF. APPROPRIATE M10 PAGES FOR DETAIL.
3. REF. PAGE A6.0 - A6.2 FOR ALTERNATE ARRANGEMENTS OF SEISMIC BRACES AND ANGLE OR HSS MEMBER AS TRAPEZE.
4. Fp SHALL BE A SINGLE LOAD APPLIED IN ANY HORIZONTAL DIRECTION. MULTIPLE ARROWS DO NOT SIGNIFY SIMULTANEOUS Fp LOADS ACTING AT ONE TIME. DESIGN PROFESSIONAL SHALL CONSIDER ECCENTRIC LOAD DISTRIBUTION WHEN DETERMINING THE Fp VALUE USED IN DESIGN.

OPM-0043-13 Reviewed for Code Compliance
BY: Jeffrey Y. Kikumoto
DATE: 06/23/2016
REVIEWED FOR CODE COMPLIANCE CALIFORNIA BUILDING CODE, 2013

MASON WEST, INC.
1601 E. Miraloma Ave. Placentia, CA 92870
TEL (714) 630 - 0701, www.masonwest.com

Jiefu "Jeff" Zhang, SE
California SE No. S5270

PAGE
D10.10

HANGER ROD DIAMETER = 3/8"	IN-LINE DUCT DEVICE SEISMIC CABLE BRACING SYSTEM 250 LB MAX	KIT OPTIONS C0SE

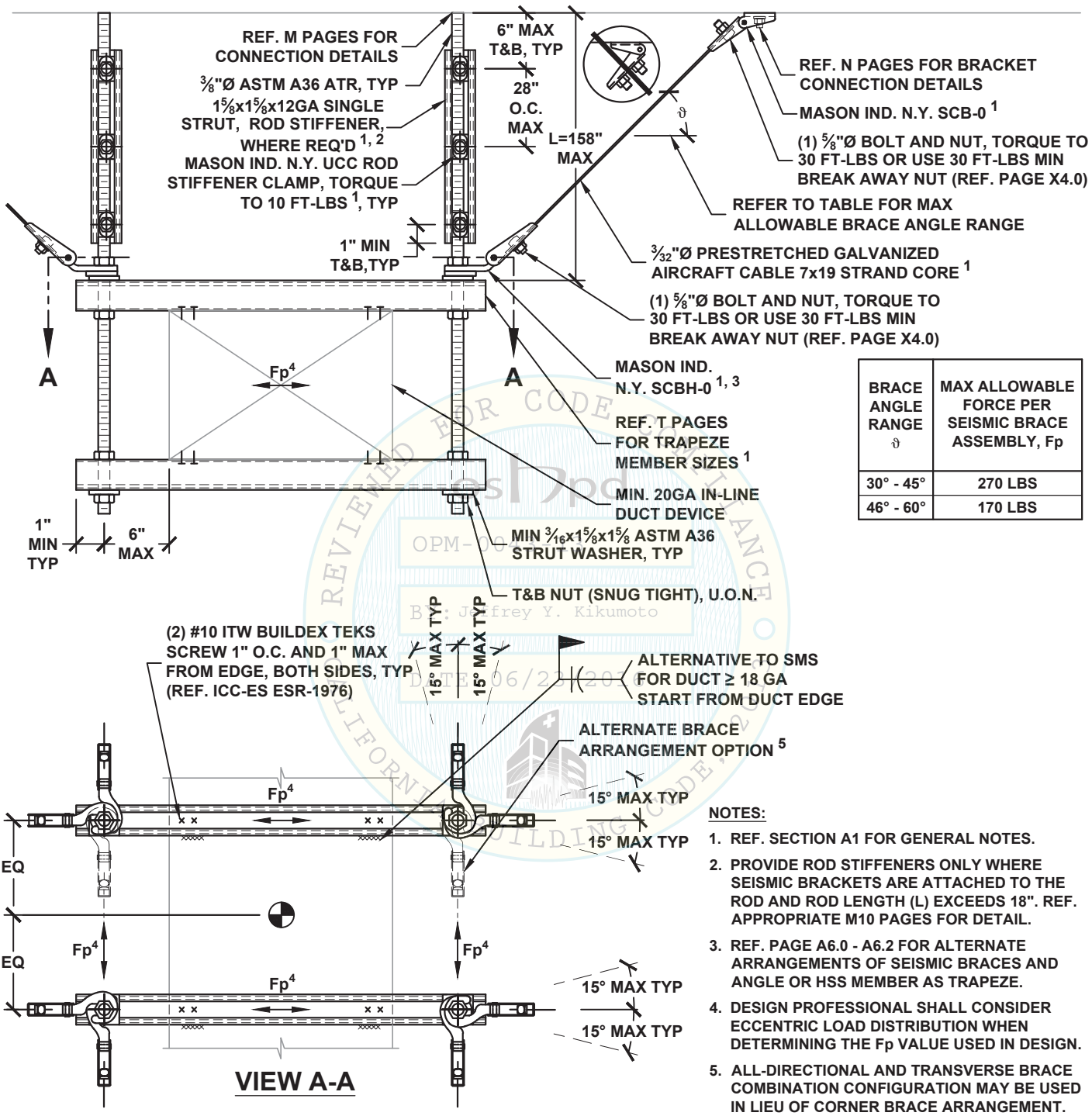

BRACE ANGLE RANGE ϑ	MAX ALLOWABLE FORCE PER SEISMIC BRACE ASSEMBLY, Fp
30° - 45°	270 LBS
46° - 60°	170 LBS

NOTES:

1. REF. SECTION A1 FOR GENERAL NOTES.
2. PROVIDE ROD STIFFENERS ONLY WHERE SEISMIC BRACKETS ARE ATTACHED TO THE ROD AND ROD LENGTH (L) EXCEEDS 18". REF. APPROPRIATE M10 PAGES FOR DETAIL.
3. REF. PAGE A6.0 - A6.2 FOR ALTERNATE ARRANGEMENTS OF SEISMIC BRACES AND ANGLE OR HSS MEMBER AS TRAPEZE.
4. DESIGN PROFESSIONAL SHALL CONSIDER ECCENTRIC LOAD DISTRIBUTION WHEN DETERMINING THE Fp VALUE USED IN DESIGN.
5. ALL-DIRECTIONAL AND TRANSVERSE BRACE COMBINATION CONFIGURATION MAY BE USED IN LIEU OF CORNER BRACE ARRANGEMENT.

MASON WEST, INC.
1601 E. Miraloma Ave. Placentia, CA 92870
TEL (714) 630 - 0701, www.masonwest.com

Jiefu "Jeff" Zhang, SE
California SE No. S5270

PAGE
D10.11

OPM-0043-13 Reviewed for Code Compliance by Jeffrey Kikumoto DATE: 06/23/2016

HANGER ROD DIAMETER = ½"	IN-LINE DUCT DEVICE SEISMIC CABLE BRACING SYSTEM 1000 LB MAX	KIT OPTIONS **C1SE**

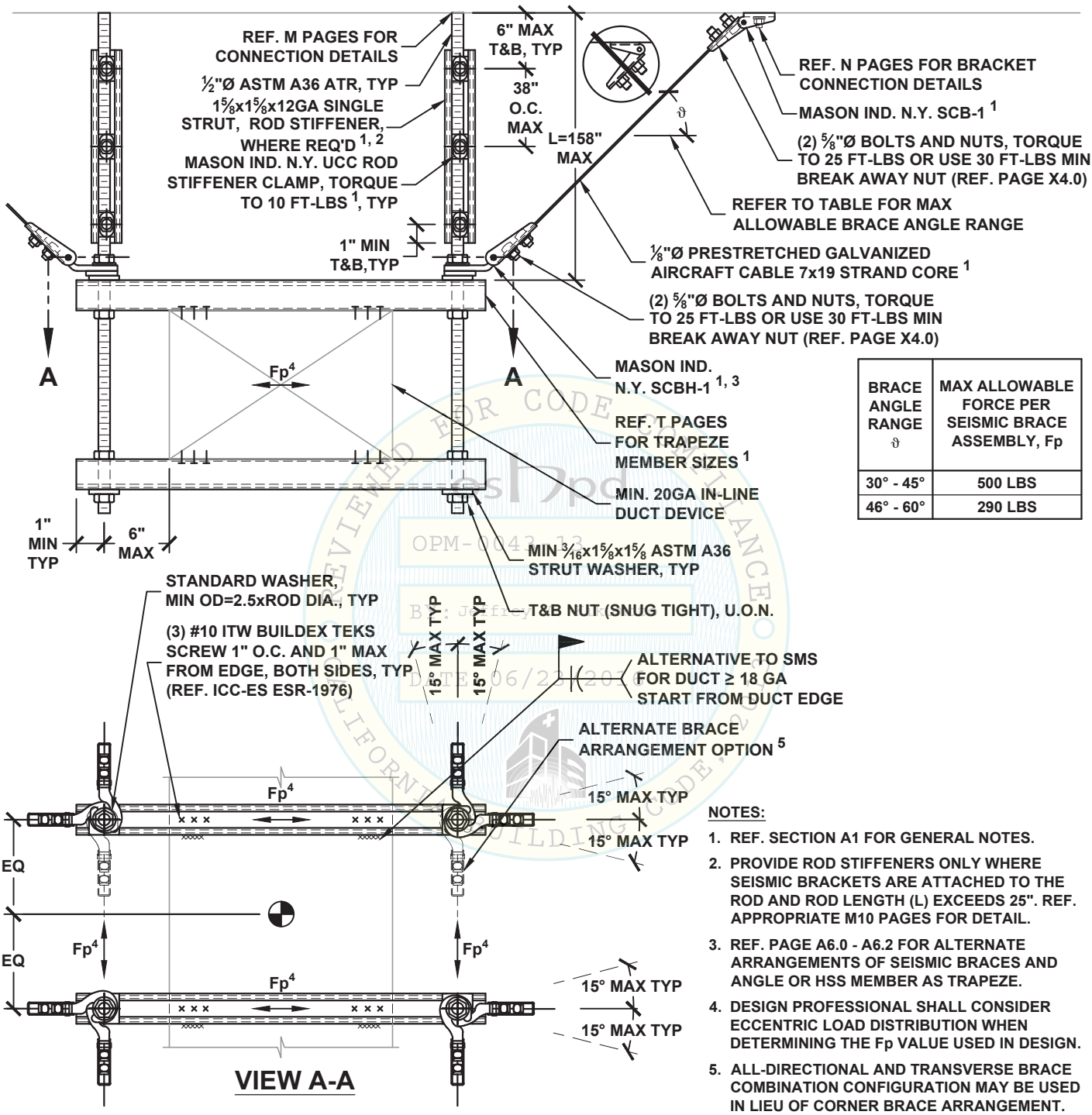

BRACE ANGLE RANGE ϑ	MAX ALLOWABLE FORCE PER SEISMIC BRACE ASSEMBLY, Fp
30° - 45°	500 LBS
46° - 60°	290 LBS

VIEW A-A

NOTES:

1. REF. SECTION A1 FOR GENERAL NOTES.
2. PROVIDE ROD STIFFENERS ONLY WHERE SEISMIC BRACKETS ARE ATTACHED TO THE ROD AND ROD LENGTH (L) EXCEEDS 25". REF. APPROPRIATE M10 PAGES FOR DETAIL.
3. REF. PAGE A6.0 - A6.2 FOR ALTERNATE ARRANGEMENTS OF SEISMIC BRACES AND ANGLE OR HSS MEMBER AS TRAPEZE.
4. DESIGN PROFESSIONAL SHALL CONSIDER ECCENTRIC LOAD DISTRIBUTION WHEN DETERMINING THE Fp VALUE USED IN DESIGN.
5. ALL-DIRECTIONAL AND TRANSVERSE BRACE COMBINATION CONFIGURATION MAY BE USED IN LIEU OF CORNER BRACE ARRANGEMENT.

MASON WEST, INC.
1601 E. Miraloma Ave. Placentia, CA 92870
TEL (714) 630 - 0701, www.masonwest.com

Jiefu "Jeff" Zhang, SE
California SE No. S5270

PAGE
D10.12

OPM-0043-13 Reviewed for Code Compliance By: Jeffrey Kikumoto DATE: 06/23/2016

HANGER ROD DIAMETER = 5/8"	IN-LINE DUCT DEVICE SEISMIC CABLE BRACING SYSTEM 2000 LB MAX	KIT OPTIONS C1SE

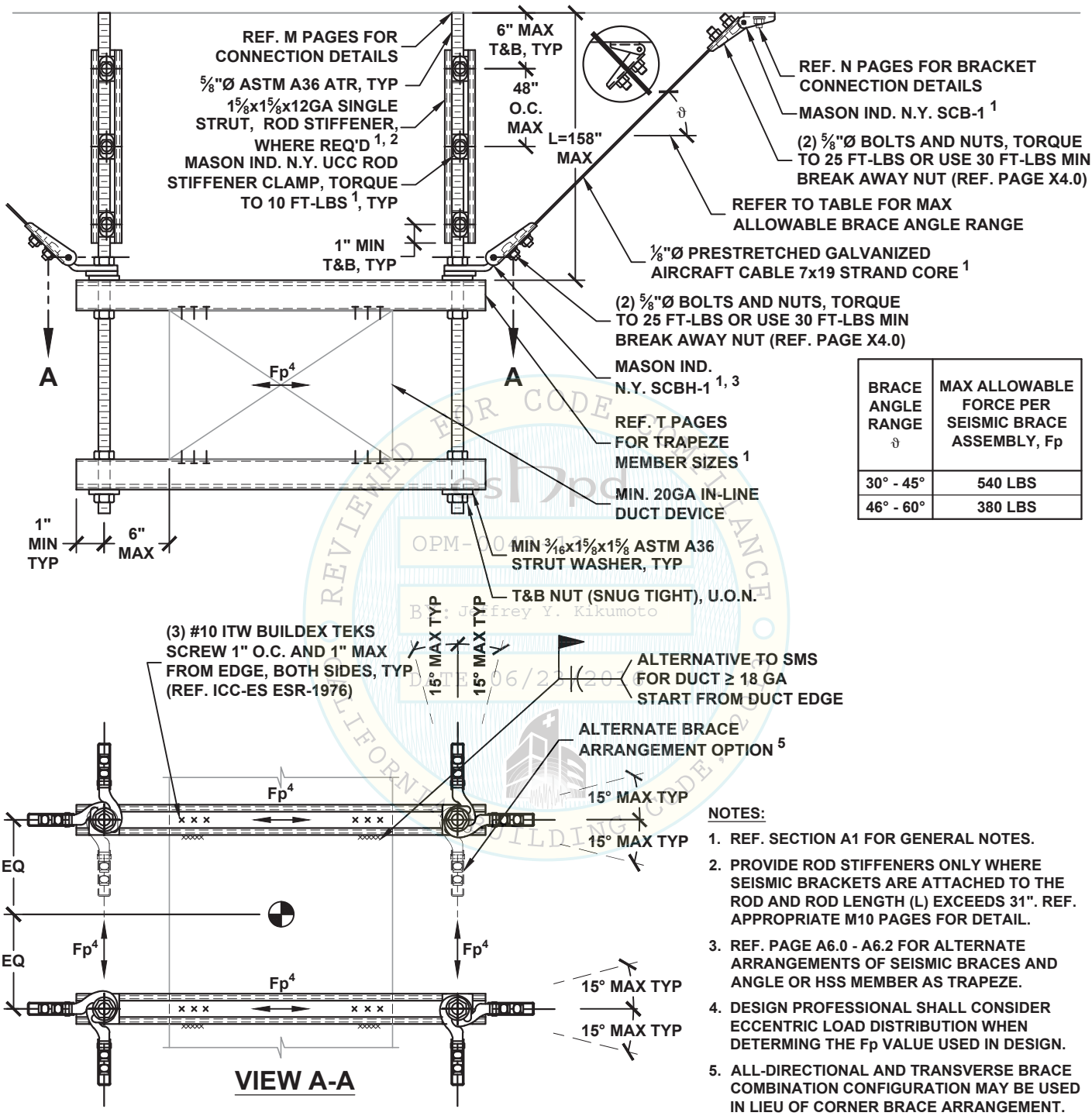

BRACE ANGLE RANGE ϑ	MAX ALLOWABLE FORCE PER SEISMIC BRACE ASSEMBLY, Fp
30° - 45°	540 LBS
46° - 60°	380 LBS

NOTES:

1. REF. SECTION A1 FOR GENERAL NOTES.
2. PROVIDE ROD STIFFENERS ONLY WHERE SEISMIC BRACKETS ARE ATTACHED TO THE ROD AND ROD LENGTH (L) EXCEEDS 31". REF. APPROPRIATE M10 PAGES FOR DETAIL.
3. REF. PAGE A6.0 - A6.2 FOR ALTERNATE ARRANGEMENTS OF SEISMIC BRACES AND ANGLE OR HSS MEMBER AS TRAPEZE.
4. DESIGN PROFESSIONAL SHALL CONSIDER ECCENTRIC LOAD DISTRIBUTION WHEN DETERMING THE Fp VALUE USED IN DESIGN.
5. ALL-DIRECTIONAL AND TRANSVERSE BRACE COMBINATION CONFIGURATION MAY BE USED IN LIEU OF CORNER BRACE ARRANGEMENT.

OPM-0043-13 Approved
By: Jeffrey Y. Kikumoto
DATE: 06/23/2016
REVIEWED FOR CODE COMPLIANCE
CALIFORNIA BUILDING CODE, 2013

MASON WEST, INC.
1601 E. Miraloma Ave. Placentia, CA 92870
TEL (714) 630 - 0701, www.masonwest.com

Jiefu "Jeff" Zhang, SE
California SE No. S5270

PAGE
D10.13

HANGER ROD DIAMETER = 3/8"	SUSPENDED EQUIPMENT SEISMIC SOLID BRACING SYSTEM 185 LB MAX VERTICAL LOAD PER HANGER	KIT OPTIONS S12SE S1220SE SH312SE SH320SE

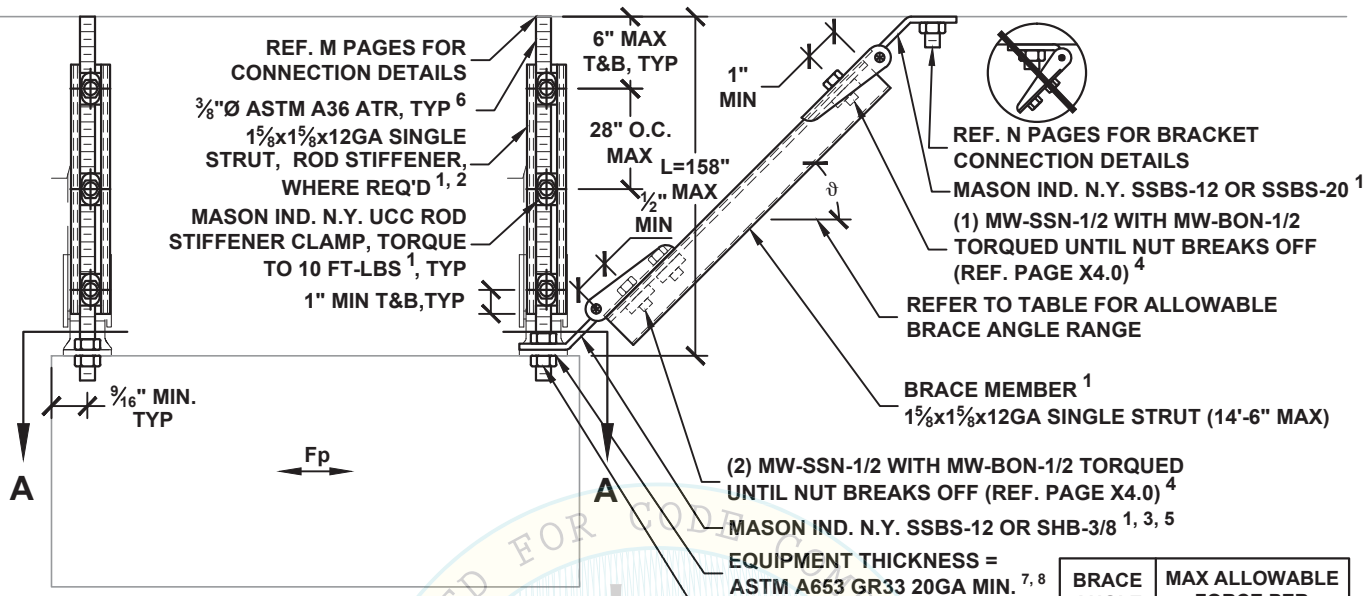

BRACE ANGLE RANGE ϑ	MAX ALLOWABLE FORCE PER SEISMIC BRACE ASSEMBLY, Fp
30° - 45°	300 LBS
46° - 60°	170 LBS

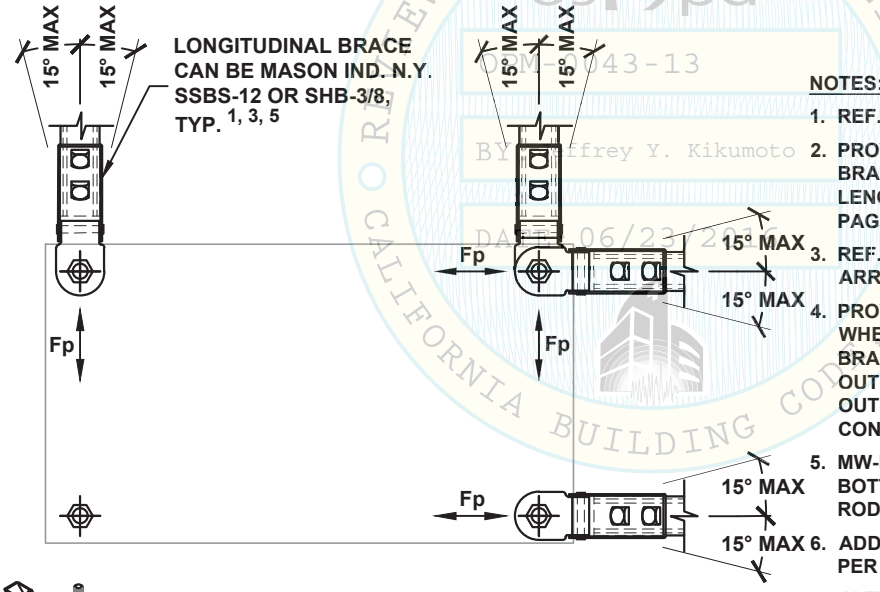

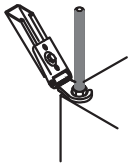

VIEW A-A

SHB OPTION

NOTES:

1. REF. SECTION A1 FOR GENERAL NOTES.
2. PROVIDE ROD STIFFENERS ONLY WHERE SEISMIC BRACKETS ARE ATTACHED TO THE ROD AND ROD LENGTH (L) EXCEEDS 18". REF. APPROPRIATE M10 PAGES FOR DETAIL.
3. REF. PAGE A6.0 - A6.2 FOR ALTERNATE ARRANGEMENTS OF SEISMIC BRACES.
4. PROVIDE (1) 1/2" DIA. CONNECTION IN CENTER HOLE WHEN STRUT BRACE IS INSTALLED INSIDE THE BRACKET AND (2) 1/2" DIA. CONNECTIONS IN (2) OUTER HOLES WHEN THE BRACE IS INSTALLED OUTSIDE OF THE BRACKET. REF. X2.3 FOR CONNECTION DETAILS.
5. MW-KY-38 (REF. X2.4) MUST BE USED ON TOP OF BOTTOM SHB WHEN STACKING (2) SHB ON THE SAME ROD.
6. ADDITIONAL GRAVITY HANGERS MAY BE REQUIRED PER EQUIPMENT MANUFACTURER'S GUIDELINES.
7. ALTERNATE TO SHOWN HANGER/BRACE ATTACHMENT TO EQUIPMENT, HANGER RODS/BRACES MAY BE ATTACHED PER EQUIPMENT OSP OR TO EQUIPMENT MANU. CLIPS WITH ASTM A653 GR33 20GA MIN. THICKNESS & 9/16" MIN. STEEL EDGE DISTANCE.
8. ATTACHMENT TO THE EQUIPMENT SHALL BE DESIGNED AND SUBMITTED TO OSHPD FOR APPROVAL.

OSHPD REVIEWED FOR CODE COMPLIANCE OPM-0043-13 BY Jeffrey Y. Kikumoto DATE 06/23/2016 CALIFORNIA BUILDING CODE

MASON WEST, INC.
1601 E. Miraloma Ave. Placentia, CA 92870
TEL (714) 630 - 0701, www.masonwest.com

Jiefu "Jeff" Zhang, SE
California SE No. S5270

HANGER ROD DIAMETER = ½"

SUSPENDED EQUIPMENT SEISMIC SOLID BRACING SYSTEM 375 LB MAX VERTICAL LOAD PER HANGER

KIT OPTIONS
S12SE
S1220SE
SH412SE
SH420SE

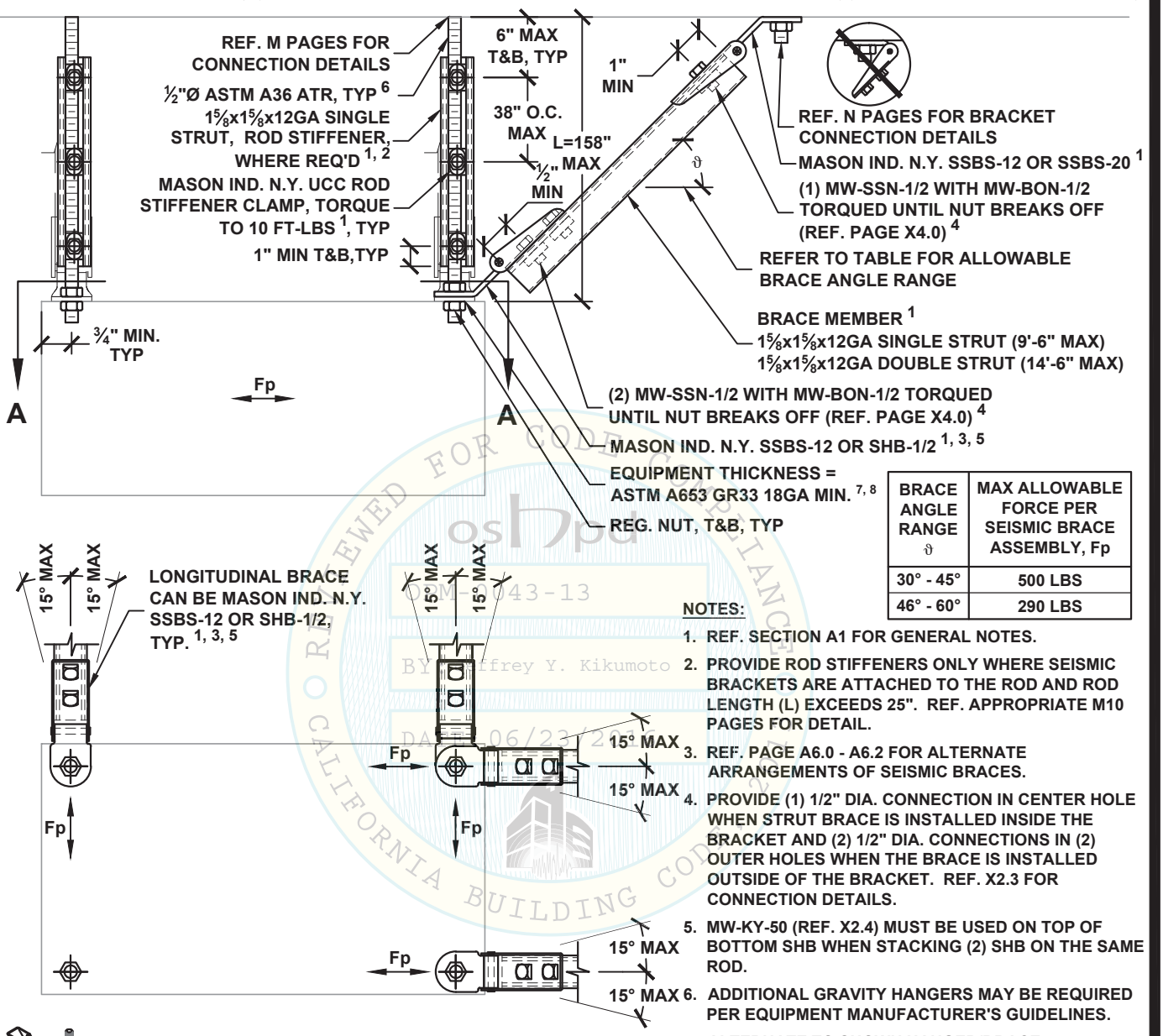

BRACE ANGLE RANGE ϑ	MAX ALLOWABLE FORCE PER SEISMIC BRACE ASSEMBLY, Fp
30° - 45°	500 LBS
46° - 60°	290 LBS

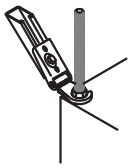

VIEW A-A

SHB OPTION

NOTES:

1. REF. SECTION A1 FOR GENERAL NOTES.
2. PROVIDE ROD STIFFENERS ONLY WHERE SEISMIC BRACKETS ARE ATTACHED TO THE ROD AND ROD LENGTH (L) EXCEEDS 25". REF. APPROPRIATE M10 PAGES FOR DETAIL.
3. REF. PAGE A6.0 - A6.2 FOR ALTERNATE ARRANGEMENTS OF SEISMIC BRACES.
4. PROVIDE (1) 1/2" DIA. CONNECTION IN CENTER HOLE WHEN STRUT BRACE IS INSTALLED INSIDE THE BRACKET AND (2) 1/2" DIA. CONNECTIONS IN (2) OUTER HOLES WHEN THE BRACE IS INSTALLED OUTSIDE OF THE BRACKET. REF. X2.3 FOR CONNECTION DETAILS.
5. MW-KY-50 (REF. X2.4) MUST BE USED ON TOP OF BOTTOM SHB WHEN STACKING (2) SHB ON THE SAME ROD.
6. ADDITIONAL GRAVITY HANGERS MAY BE REQUIRED PER EQUIPMENT MANUFACTURER'S GUIDELINES.
7. ALTERNATE TO SHOWN HANGER/BRACE ATTACHMENT TO EQUIPMENT, HANGER RODS/BRACES MAY BE ATTACHED PER EQUIPMENT OSP OR TO EQUIPMENT MANU. CLIPS WITH ASTM A653 GR33 18GA MIN. THICKNESS & ¾" MIN. STEEL EDGE DISTANCE.
8. ATTACHMENT TO THE EQUIPMENT SHALL BE DESIGNED AND SUBMITTED TO OSHPD FOR APPROVAL.

REVIEWED FOR CODE COMPLIANCE
OSHPD
OPM-0043-13
BY: Jeffrey Y. Kikumoto
DATE: 06/23/2016
CALIFORNIA BUILDING CODE

MASON WEST, INC.
1601 E. Miraloma Ave. Placentia, CA 92870
TEL (714) 630 - 0701, www.masonwest.com

Jiefu "Jeff" Zhang, SE
California SE No. S5270

PAGE
D11.11

HANGER ROD DIAMETER = 5/8"	SUSPENDED EQUIPMENT SEISMIC SOLID BRACING SYSTEM 750 LB MAX VERTICAL LOAD PER HANGER	KIT OPTIONS SH5SE

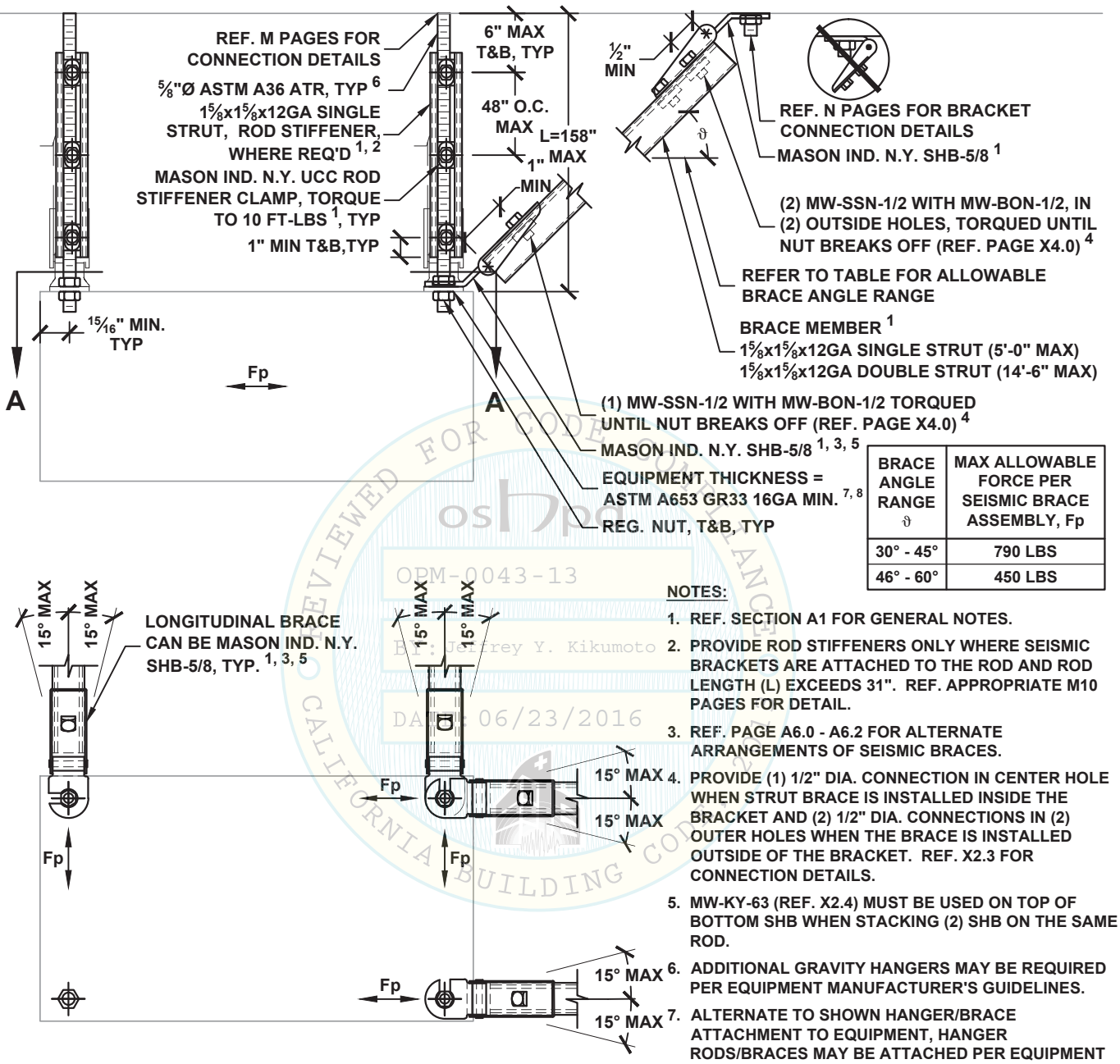

BRACE ANGLE RANGE ϑ	MAX ALLOWABLE FORCE PER SEISMIC BRACE ASSEMBLY, Fp
30° - 45°	790 LBS
46° - 60°	450 LBS

VIEW A-A

NOTES:

1. REF. SECTION A1 FOR GENERAL NOTES.
2. PROVIDE ROD STIFFENERS ONLY WHERE SEISMIC BRACKETS ARE ATTACHED TO THE ROD AND ROD LENGTH (L) EXCEEDS 31". REF. APPROPRIATE M10 PAGES FOR DETAIL.
3. REF. PAGE A6.0 - A6.2 FOR ALTERNATE ARRANGEMENTS OF SEISMIC BRACES.
4. PROVIDE (1) 1/2" DIA. CONNECTION IN CENTER HOLE WHEN STRUT BRACE IS INSTALLED INSIDE THE BRACKET AND (2) 1/2" DIA. CONNECTIONS IN (2) OUTER HOLES WHEN THE BRACE IS INSTALLED OUTSIDE OF THE BRACKET. REF. X2.3 FOR CONNECTION DETAILS.
5. MW-KY-63 (REF. X2.4) MUST BE USED ON TOP OF BOTTOM SHB WHEN STACKING (2) SHB ON THE SAME ROD.
6. ADDITIONAL GRAVITY HANGERS MAY BE REQUIRED PER EQUIPMENT MANUFACTURER'S GUIDELINES.
7. ALTERNATE TO SHOWN HANGER/BRACE ATTACHMENT TO EQUIPMENT, HANGER RODS/BRACES MAY BE ATTACHED PER EQUIPMENT OSP OR TO EQUIPMENT MANU. CLIPS WITH ASTM A653 GR33 16GA MIN. THICKNESS & 15/16" MIN. STEEL EDGE DISTANCE.
8. ATTACHMENT TO THE EQUIPMENT SHALL BE DESIGNED AND SUBMITTED TO OSHPD FOR APPROVAL.

OPM-0043-13
Ref. Jeffrey Y. Kikumoto
DATE 06/23/2016
REVIEWED FOR CODE COMPLIANCE CALIFORNIA BUILDING CODE

MASON WEST, INC.
1601 E. Miraloma Ave. Placentia, CA 92870
TEL (714) 630 - 0701, www.masonwest.com

Jiefu "Jeff" Zhang, SE
California SE No. S5270

PAGE
D11.12

HANGER ROD DIAMETER = ¾"	SUSPENDED EQUIPMENT SEISMIC SOLID BRACING SYSTEM 1250 LB MAX VERTICAL LOAD PER HANGER	KIT OPTIONS **SH6SE**

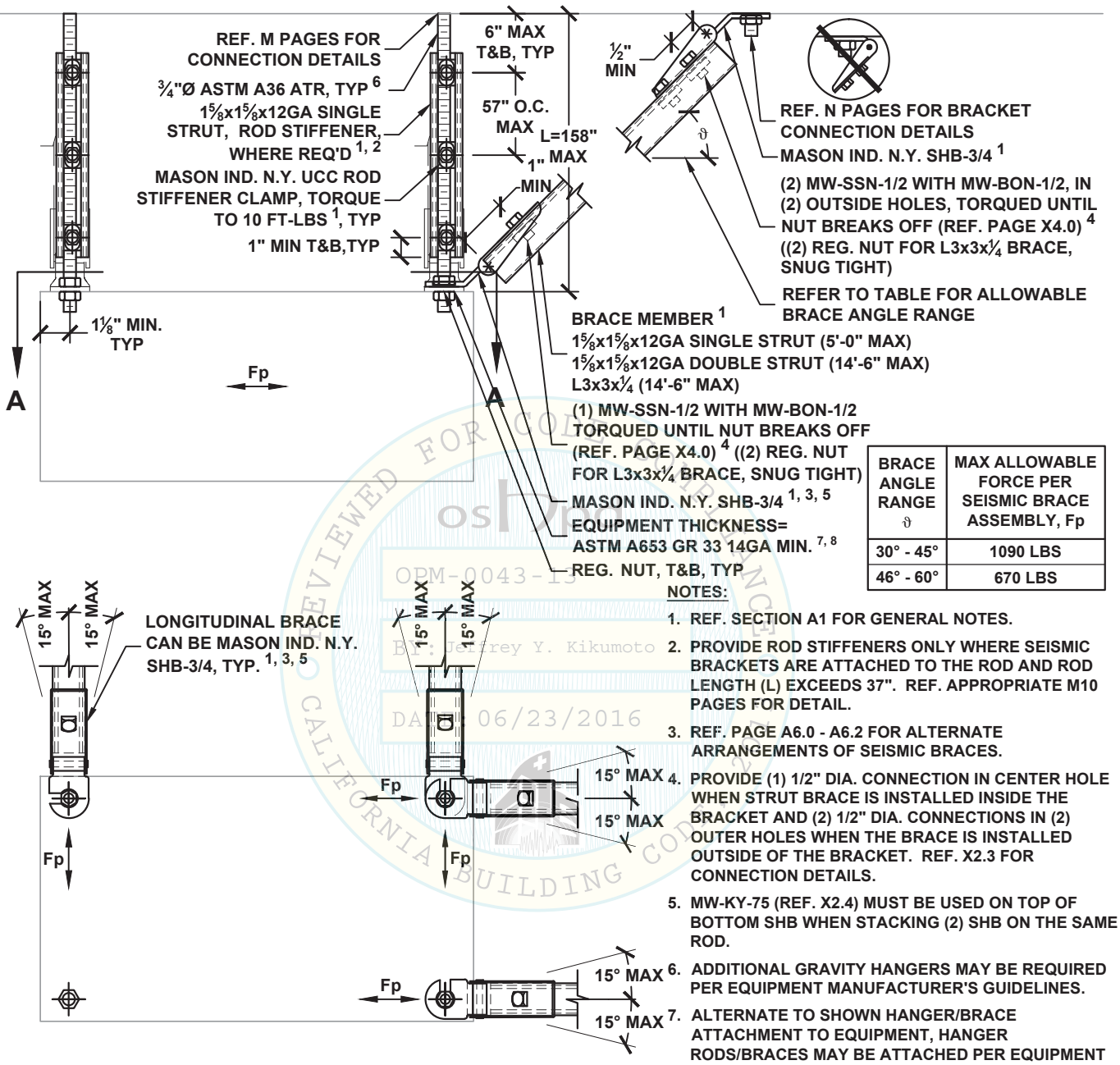

BRACE ANGLE RANGE ϑ	MAX ALLOWABLE FORCE PER SEISMIC BRACE ASSEMBLY, Fp
30° - 45°	1090 LBS
46° - 60°	670 LBS

NOTES:

1. REF. SECTION A1 FOR GENERAL NOTES.
2. PROVIDE ROD STIFFENERS ONLY WHERE SEISMIC BRACKETS ARE ATTACHED TO THE ROD AND ROD LENGTH (L) EXCEEDS 37". REF. APPROPRIATE M10 PAGES FOR DETAIL.
3. REF. PAGE A6.0 - A6.2 FOR ALTERNATE ARRANGEMENTS OF SEISMIC BRACES.
4. PROVIDE (1) 1/2" DIA. CONNECTION IN CENTER HOLE WHEN STRUT BRACE IS INSTALLED INSIDE THE BRACKET AND (2) 1/2" DIA. CONNECTIONS IN (2) OUTER HOLES WHEN THE BRACE IS INSTALLED OUTSIDE OF THE BRACKET. REF. X2.3 FOR CONNECTION DETAILS.
5. MW-KY-75 (REF. X2.4) MUST BE USED ON TOP OF BOTTOM SHB WHEN STACKING (2) SHB ON THE SAME ROD.
6. ADDITIONAL GRAVITY HANGERS MAY BE REQUIRED PER EQUIPMENT MANUFACTURER'S GUIDELINES.
7. ALTERNATE TO SHOWN HANGER/BRACE ATTACHMENT TO EQUIPMENT, HANGER RODS/BRACES MAY BE ATTACHED PER EQUIPMENT OSP OR TO EQUIPMENT MANU. CLIPS WITH ASTM A653 GR33 14GA MIN. THICKNESS & 1⅛" MIN. STEEL EDGE DISTANCE.
8. ATTACHMENT TO THE EQUIPMENT SHALL BE DESIGNED AND SUBMITTED TO OSHPD FOR APPROVAL.

VIEW A-A

OSHPD REVIEWED FOR CODE COMPLIANCE
OPM-0043-13
By: Jeffrey Y. Kikumoto
DATE 06/23/2016
CALIFORNIA BUILDING CODE

MASON WEST, INC.
1601 E. Miraloma Ave. Placentia, CA 92870
TEL (714) 630 - 0701, www.masonwest.com

Jiefu "Jeff" Zhang, SE
California SE No. S5270

PAGE
D11.13

HANGER ROD DIAMETER = 3/8"	SUSPENDED EQUIPMENT SEISMIC CABLE BRACING SYSTEM 185 LB MAX VERTICAL LOAD PER HANGER	KIT OPTIONS C0SE

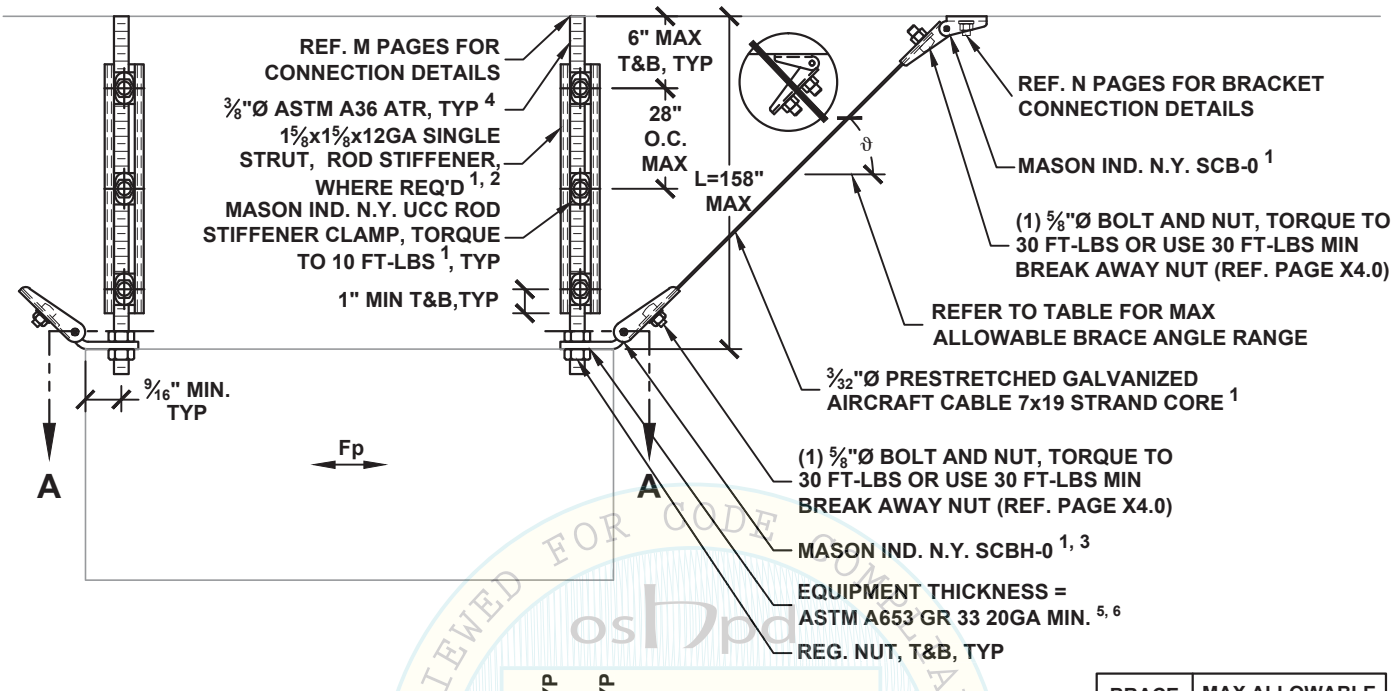

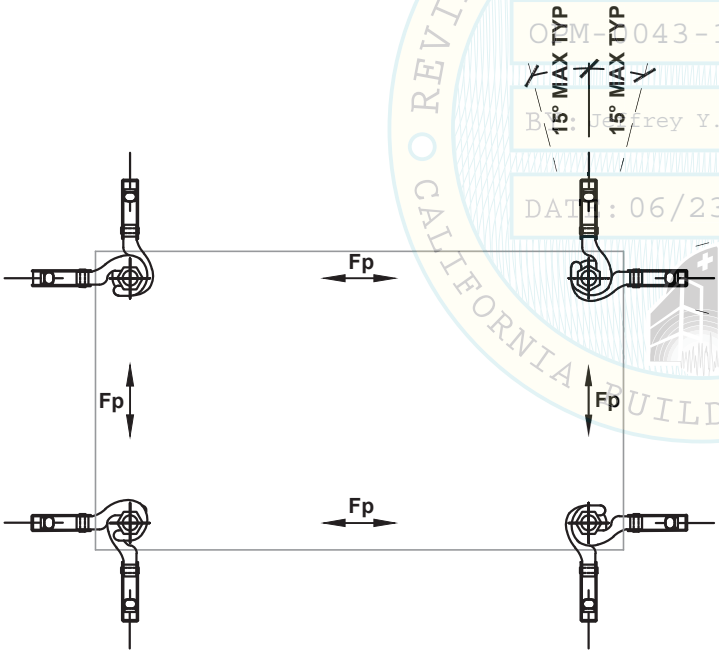

VIEW A-A

BRACE ANGLE RANGE ϑ	MAX ALLOWABLE FORCE PER SEISMIC BRACE ASSEMBLY, Fp
30° - 45°	270 LBS
46° - 60°	170 LBS

NOTES:

1. REF. SECTION A1 FOR GENERAL NOTES.
2. PROVIDE ROD STIFFENERS ONLY WHERE SEISMIC BRACKETS ARE ATTACHED TO THE ROD AND ROD LENGTH (L) EXCEEDS 18". REF. APPROPRIATE M10 PAGES FOR DETAIL.
3. REF. PAGE A6.0 - A6.2 FOR ALTERNATE ARRANGEMENTS OF SEISMIC BRACES.
4. ADDITIONAL GRAVITY HANGERS MAY BE REQUIRED PER EQUIPMENT MANUFACTURER'S GUIDELINES.
5. ALTERNATE TO SHOWN HANGER/BRACE ATTACHMENT TO EQUIPMENT, HANGER RODS/BRACES MAY BE ATTACHED TO EQUIPMENT MANU. CLIPS WITH ASTM A653 GR 33 20GA MIN. THICKNESS & 9/16" MIN. STEEL EDGE DISTANCE.
6. ATTACHMENT TO THE EQUIPMENT SHALL BE DESIGNED AND SUBMITTED TO OSHPD FOR APPROVAL.

REVIEWED FOR CODE COMPLIANCE
CALIFORNIA BUILDING CODE 2013
OSHPD
OPM-0043-13
By: Jeffrey Y. Kikumoto
DATE: 06/23/2016

MASON WEST, INC.
1601 E. Miraloma Ave. Placentia, CA 92870
TEL (714) 630 - 0701, www.masonwest.com

Jiefu "Jeff" Zhang, SE
California SE No. S5270

PAGE
D12.10

HANGER ROD DIAMETER = ½"	SUSPENDED EQUIPMENT SEISMIC CABLE BRACING SYSTEM 375 LB MAX VERTICAL LOAD PER HANGER	KIT OPTIONS C1SE

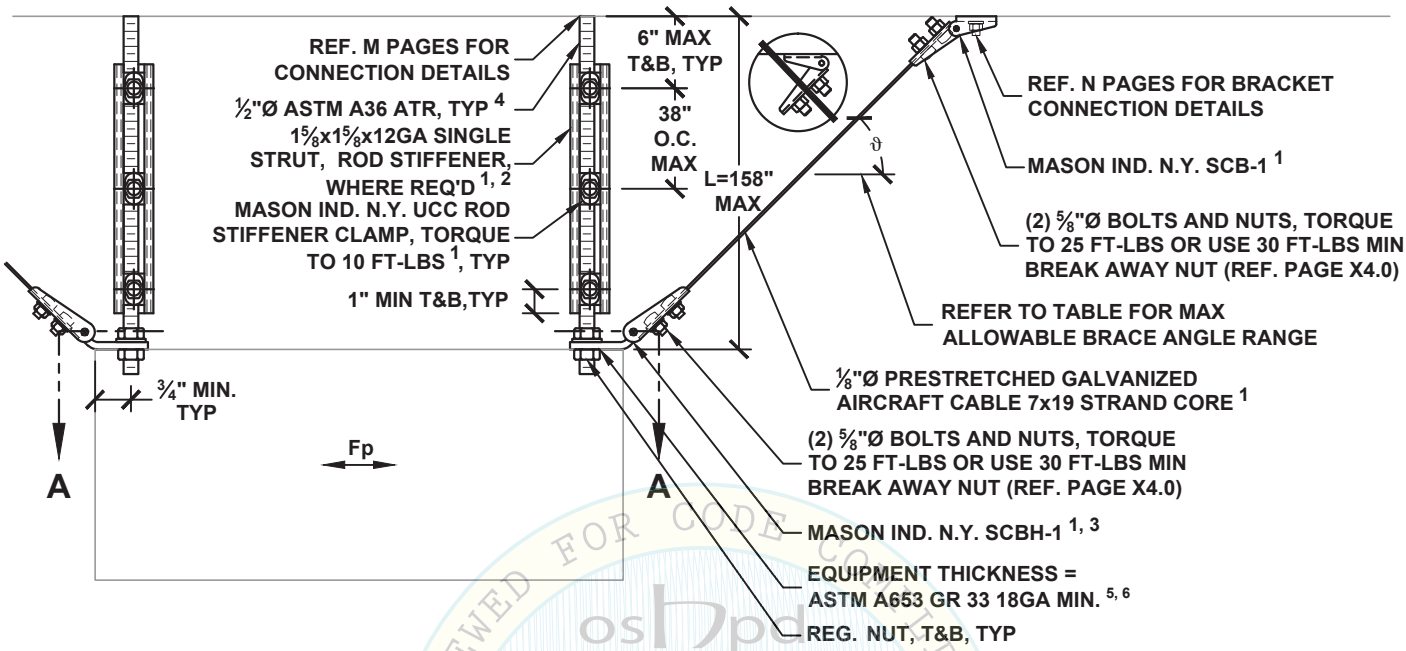

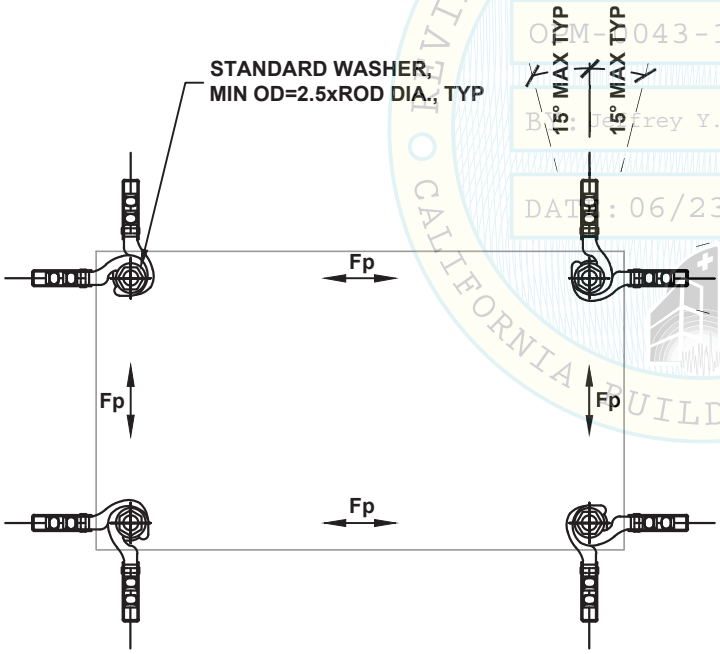

VIEW A-A

BRACE ANGLE RANGE ϑ	MAX ALLOWABLE FORCE PER SEISMIC BRACE ASSEMBLY, Fp
30° - 45°	500 LBS
46° - 60°	290 LBS

NOTES:

1. REF. SECTION A1 FOR GENERAL NOTES.
2. PROVIDE ROD STIFFENERS ONLY WHERE SEISMIC BRACKETS ARE ATTACHED TO THE ROD AND ROD LENGTH (L) EXCEEDS 25". REF. APPROPRIATE M10 PAGES FOR DETAIL.
3. REF. PAGE A6.0 - A6.2 FOR ALTERNATE ARRANGEMENTS OF SEISMIC BRACES.
4. ADDITIONAL GRAVITY HANGERS MAY BE REQUIRED PER EQUIPMENT MANUFACTURER'S GUIDELINES.
5. ALTERNATE TO SHOWN HANGER/BRACE ATTACHMENT TO EQUIPMENT, HANGER RODS/BRACES MAY BE ATTACHED PER EQUIPMENT OSP OR TO EQUIPMENT MANU. CLIPS WITH ASTM A653 GR 33 18GA MIN. THICKNESS & ¾" MIN. STEEL EDGE DISTANCE.
6. ATTACHMENT TO THE EQUIPMENT SHALL BE DESIGNED AND SUBMITTED TO OSHPD FOR APPROVAL.

REVIEWED FOR CODE COMPLIANCE
OSHPD
OPM-0043-13
By: Jeffrey Y. Kikumoto
DATE: 06/23/2016
CALIFORNIA BUILDING CODE 2013

MASON WEST, INC.
1601 E. Miraloma Ave. Placentia, CA 92870
TEL (714) 630 - 0701, www.masonwest.com

Jiefu "Jeff" Zhang, SE
California SE No. S5270

PAGE
D12.11

HANGER ROD DIAMETER = 5/8"	SUSPENDED EQUIPMENT SEISMIC CABLE BRACING SYSTEM 750 LB MAX VERTICAL LOAD PER HANGER	KIT OPTIONS C1SE

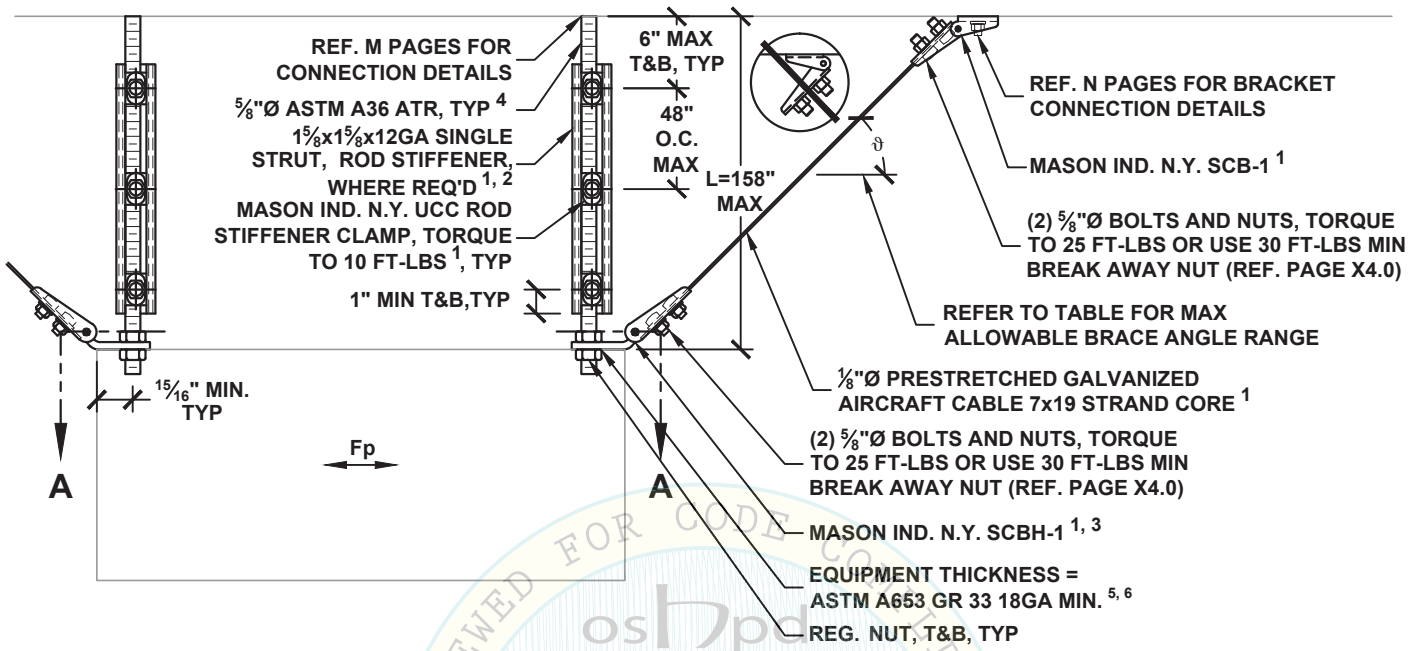

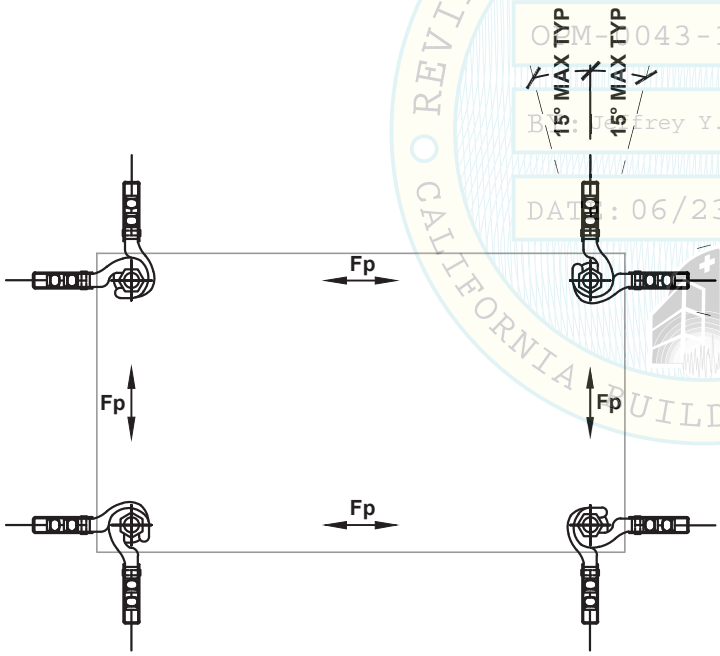

VIEW A-A

BRACE ANGLE RANGE ϑ	MAX ALLOWABLE FORCE PER SEISMIC BRACE ASSEMBLY, Fp
30° - 45°	540 LBS
46° - 60°	380 LBS

NOTES:

1. REF. SECTION A1 FOR GENERAL NOTES.
2. PROVIDE ROD STIFFENERS ONLY WHERE SEISMIC BRACKETS ARE ATTACHED TO THE ROD AND ROD LENGTH (L) EXCEEDS 31". REF. APPROPRIATE M10 PAGES FOR DETAIL.
3. REF. PAGE A6.0 - A6.2 FOR ALTERNATE ARRANGEMENTS OF SEISMIC BRACES.
4. ADDITIONAL GRAVITY HANGERS MAY BE REQUIRED PER EQUIPMENT MANUFACTURER'S GUIDELINES.
5. ALTERNATE TO SHOWN HANGER/BRACE ATTACHMENT TO EQUIPMENT, HANGER RODS/BRACES MAY BE ATTACHED PER EQUIPMENT OSP OR TO EQUIPMENT MANU. CLIPS WITH ASTM A653 GR 33 18GA MIN. THICKNESS & 15/16" MIN. STEEL EDGE DISTANCE.
6. ATTACHMENT TO THE EQUIPMENT SHALL BE DESIGNED AND SUBMITTED TO OSHPD FOR APPROVAL.

REVIEWED FOR CODE COMPLIANCE
CALIFORNIA BUILDING CODE 2013
OSHPD
OPM-0043-13
By: Jeffrey Y. Kikumoto
DATE: 06/23/2016

MASON WEST, INC.
1601 E. Miraloma Ave. Placentia, CA 92870
TEL (714) 630 - 0701, www.masonwest.com

Jiefu "Jeff" Zhang, SE
California SE No. S5270

PAGE
D12.12

HANGER ROD DIAMETER = ¾"	SUSPENDED EQUIPMENT SEISMIC CABLE BRACING SYSTEM 1250 LB MAX VERTICAL LOAD PER HANGER	KIT OPTIONS C2SE

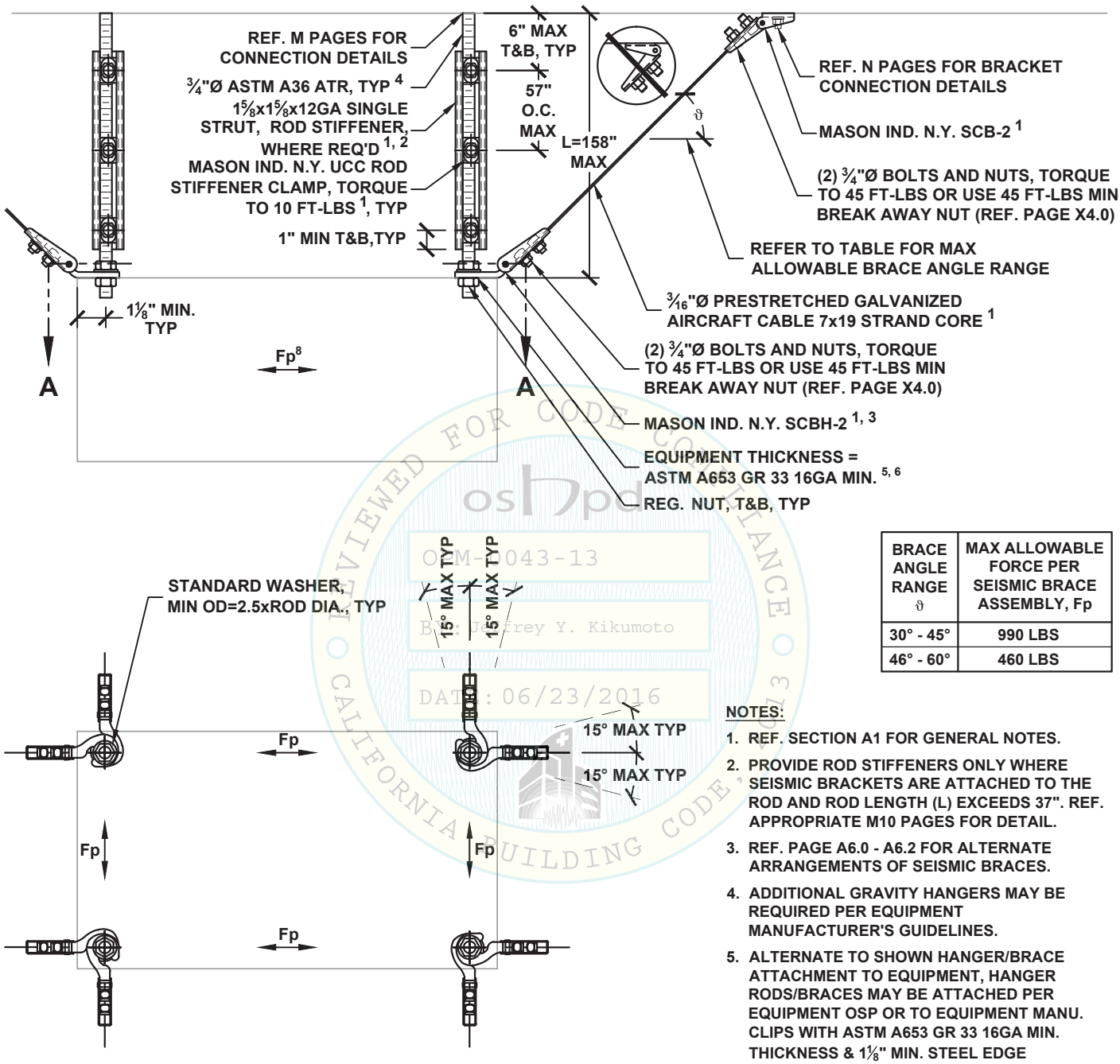

BRACE ANGLE RANGE ϑ	MAX ALLOWABLE FORCE PER SEISMIC BRACE ASSEMBLY, Fp
30° - 45°	990 LBS
46° - 60°	460 LBS

VIEW A-A

NOTES:

1. REF. SECTION A1 FOR GENERAL NOTES.
2. PROVIDE ROD STIFFENERS ONLY WHERE SEISMIC BRACKETS ARE ATTACHED TO THE ROD AND ROD LENGTH (L) EXCEEDS 37". REF. APPROPRIATE M10 PAGES FOR DETAIL.
3. REF. PAGE A6.0 - A6.2 FOR ALTERNATE ARRANGEMENTS OF SEISMIC BRACES.
4. ADDITIONAL GRAVITY HANGERS MAY BE REQUIRED PER EQUIPMENT MANUFACTURER'S GUIDELINES.
5. ALTERNATE TO SHOWN HANGER/BRACE ATTACHMENT TO EQUIPMENT, HANGER RODS/BRACES MAY BE ATTACHED PER EQUIPMENT OSP OR TO EQUIPMENT MANU. CLIPS WITH ASTM A653 GR 33 16GA MIN. THICKNESS & 1⅛" MIN. STEEL EDGE DISTANCE.
6. ATTACHMENT TO THE EQUIPMENT SHALL BE DESIGNED AND SUBMITTED TO OSHPD FOR APPROVAL.

REVIEWED FOR CODE COMPLIANCE
OSHPD
OPM-0043-13
By: Jeffrey Y. Kikumoto
DATE: 06/23/2016
CALIFORNIA BUILDING CODE 2013

MASON WEST, INC.
1601 E. Miraloma Ave. Placentia, CA 92870
TEL (714) 630 - 0701, www.masonwest.com

Jiefu "Jeff" Zhang, SE
California SE No. S5270

PAGE
D12.13

HANGER ROD DIAMETER = 3/8"	SUSPENDED EQUIPMENT SEISMIC CABLE BRACING SYSTEM 185 LB MAX VERTICAL LOAD PER HANGER	KIT OPTIONS C0X

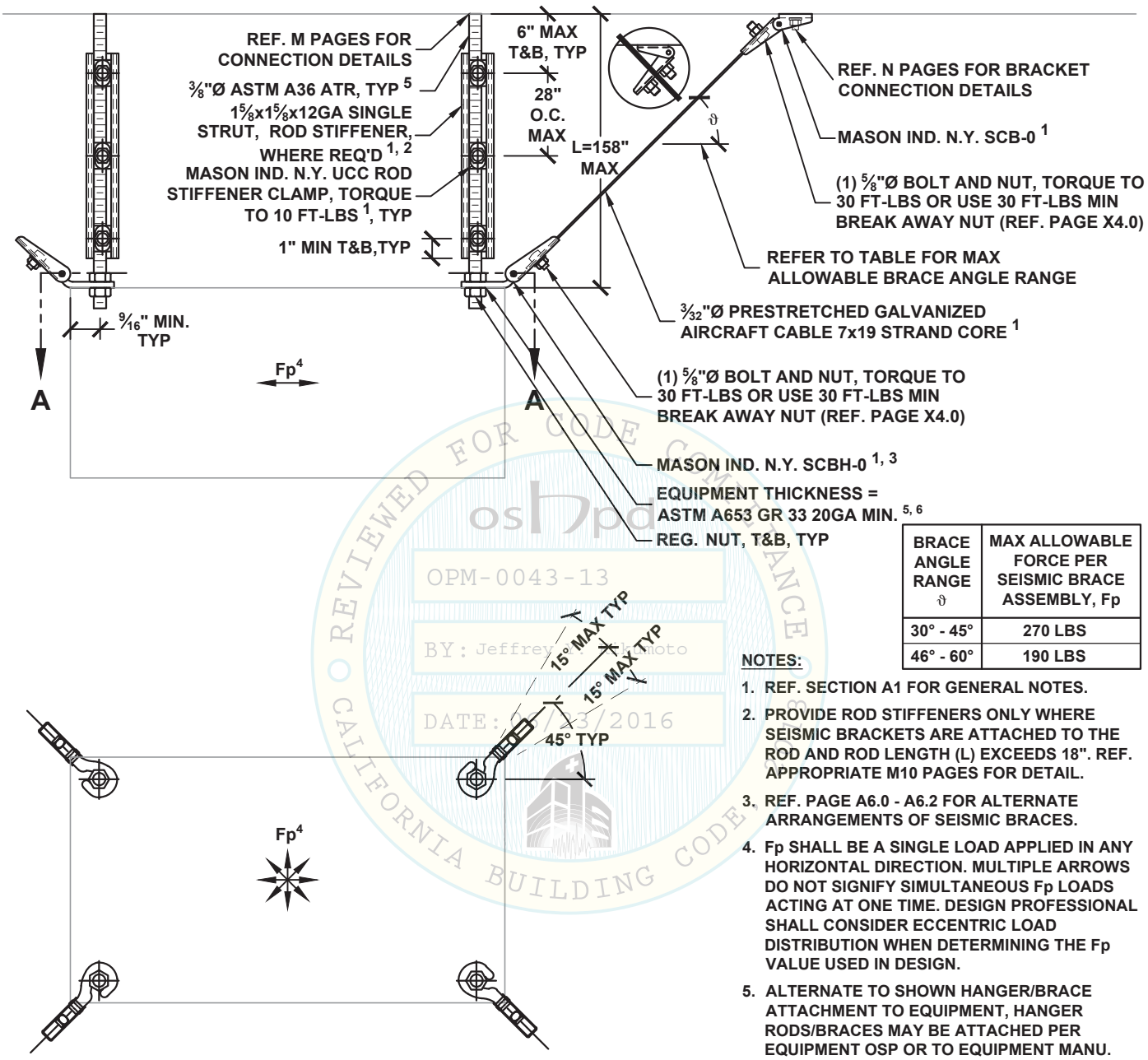

VIEW A-A

BRACE ANGLE RANGE ϑ	MAX ALLOWABLE FORCE PER SEISMIC BRACE ASSEMBLY, Fp
30° - 45°	270 LBS
46° - 60°	190 LBS

NOTES:

1. REF. SECTION A1 FOR GENERAL NOTES.
2. PROVIDE ROD STIFFENERS ONLY WHERE SEISMIC BRACKETS ARE ATTACHED TO THE ROD AND ROD LENGTH (L) EXCEEDS 18". REF. APPROPRIATE M10 PAGES FOR DETAIL.
3. REF. PAGE A6.0 - A6.2 FOR ALTERNATE ARRANGEMENTS OF SEISMIC BRACES.
4. Fp SHALL BE A SINGLE LOAD APPLIED IN ANY HORIZONTAL DIRECTION. MULTIPLE ARROWS DO NOT SIGNIFY SIMULTANEOUS Fp LOADS ACTING AT ONE TIME. DESIGN PROFESSIONAL SHALL CONSIDER ECCENTRIC LOAD DISTRIBUTION WHEN DETERMINING THE Fp VALUE USED IN DESIGN.
5. ALTERNATE TO SHOWN HANGER/BRACE ATTACHMENT TO EQUIPMENT, HANGER RODS/BRACES MAY BE ATTACHED PER EQUIPMENT OSP OR TO EQUIPMENT MANU. CLIPS WITH ASTM A653 GR 33 20GA MIN. THICKNESS & 9/16" MIN. STEEL EDGE DISTANCE.
6. ATTACHMENT TO THE EQUIPMENT SHALL BE DESIGNED AND SUBMITTED TO OSHPD FOR APPROVAL.

REVIEWED FOR CODE COMPLIANCE CALIFORNIA BUILDING CODE
OPM-0043-13
BY: Jeffrey Kikumoto
DATE: 06/23/2016

MASON WEST, INC.
1601 E. Miraloma Ave. Placentia, CA 92870
TEL (714) 630 - 0701, www.masonwest.com

Jiefu "Jeff" Zhang, SE
California SE No. S5270

PAGE
D13.10

HANGER ROD DIAMETER = ½"	SUSPENDED EQUIPMENT SEISMIC CABLE BRACING SYSTEM 375 LB MAX VERTICAL LOAD PER HANGER	KIT OPTIONS C1X

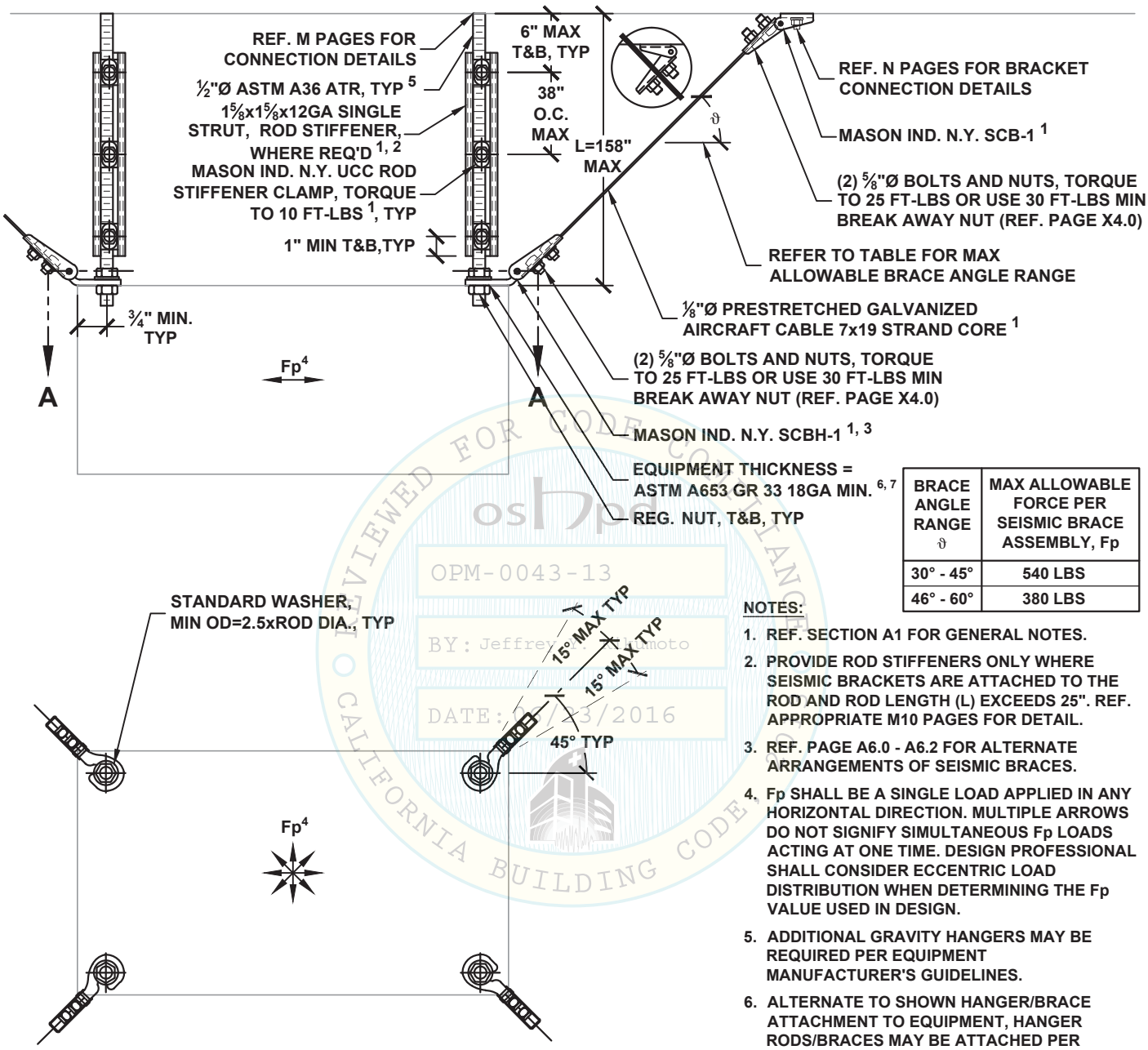

BRACE ANGLE RANGE ϑ	MAX ALLOWABLE FORCE PER SEISMIC BRACE ASSEMBLY, Fp
30° - 45°	540 LBS
46° - 60°	380 LBS

VIEW A-A

NOTES:

1. REF. SECTION A1 FOR GENERAL NOTES.
2. PROVIDE ROD STIFFENERS ONLY WHERE SEISMIC BRACKETS ARE ATTACHED TO THE ROD AND ROD LENGTH (L) EXCEEDS 25". REF. APPROPRIATE M10 PAGES FOR DETAIL.
3. REF. PAGE A6.0 - A6.2 FOR ALTERNATE ARRANGEMENTS OF SEISMIC BRACES.
4. Fp SHALL BE A SINGLE LOAD APPLIED IN ANY HORIZONTAL DIRECTION. MULTIPLE ARROWS DO NOT SIGNIFY SIMULTANEOUS Fp LOADS ACTING AT ONE TIME. DESIGN PROFESSIONAL SHALL CONSIDER ECCENTRIC LOAD DISTRIBUTION WHEN DETERMINING THE Fp VALUE USED IN DESIGN.
5. ADDITIONAL GRAVITY HANGERS MAY BE REQUIRED PER EQUIPMENT MANUFACTURER'S GUIDELINES.
6. ALTERNATE TO SHOWN HANGER/BRACE ATTACHMENT TO EQUIPMENT, HANGER RODS/BRACES MAY BE ATTACHED PER EQUIPMENT OSP OR TO EQUIPMENT MANU. CLIPS WITH ASTM A653 GR 33 18GA MIN. THICKNESS & ¾" MIN. STEEL EDGE DISTANCE.
7. ATTACHMENT TO THE EQUIPMENT SHALL BE DESIGNED AND SUBMITTED TO OSHPD FOR APPROVAL.

REVIEWED FOR CODE COMPLIANCE CALIFORNIA BUILDING CODE
OPM-0043-13
BY: Jeffrey Kikumoto
DATE: 6/23/2016

MASON WEST, INC.
1601 E. Miraloma Ave. Placentia, CA 92870
TEL (714) 630 - 0701, www.masonwest.com

Jiefu "Jeff" Zhang, SE
California SE No. S5270

PAGE
D13.11

HANGER ROD DIAMETER = 5/8"	SUSPENDED EQUIPMENT SEISMIC CABLE BRACING SYSTEM 750 LB MAX VERTICAL LOAD PER HANGER	KIT OPTIONS C1X

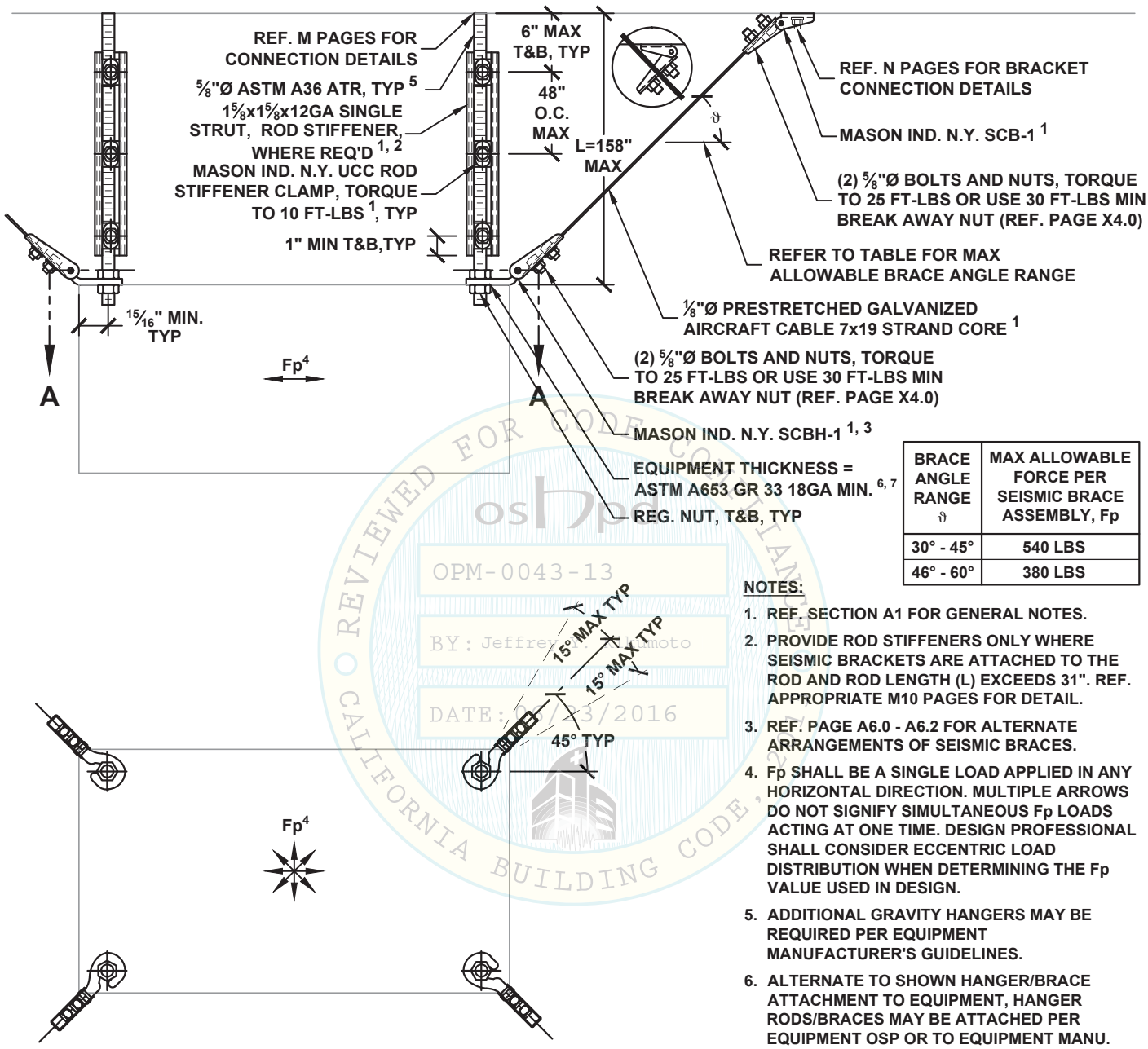

BRACE ANGLE RANGE ϑ	MAX ALLOWABLE FORCE PER SEISMIC BRACE ASSEMBLY, Fp
30° - 45°	540 LBS
46° - 60°	380 LBS

VIEW A-A

NOTES:

1. REF. SECTION A1 FOR GENERAL NOTES.
2. PROVIDE ROD STIFFENERS ONLY WHERE SEISMIC BRACKETS ARE ATTACHED TO THE ROD AND ROD LENGTH (L) EXCEEDS 31". REF. APPROPRIATE M10 PAGES FOR DETAIL.
3. REF. PAGE A6.0 - A6.2 FOR ALTERNATE ARRANGEMENTS OF SEISMIC BRACES.
4. Fp SHALL BE A SINGLE LOAD APPLIED IN ANY HORIZONTAL DIRECTION. MULTIPLE ARROWS DO NOT SIGNIFY SIMULTANEOUS Fp LOADS ACTING AT ONE TIME. DESIGN PROFESSIONAL SHALL CONSIDER ECCENTRIC LOAD DISTRIBUTION WHEN DETERMINING THE Fp VALUE USED IN DESIGN.
5. ADDITIONAL GRAVITY HANGERS MAY BE REQUIRED PER EQUIPMENT MANUFACTURER'S GUIDELINES.
6. ALTERNATE TO SHOWN HANGER/BRACE ATTACHMENT TO EQUIPMENT, HANGER RODS/BRACES MAY BE ATTACHED PER EQUIPMENT OSP OR TO EQUIPMENT MANU. CLIPS WITH ASTM A653 GR 33 18GA MIN. THICKNESS & 15/16" MIN. STEEL EDGE DISTANCE.
7. ATTACHMENT TO THE EQUIPMENT SHALL BE DESIGNED AND SUBMITTED TO OSHPD FOR APPROVAL.

REVIEWED FOR CODE COMPLIANCE
OSHPD
OPM-0043-13
BY: Jeffrey Kikumoto
DATE: 6/23/2016
CALIFORNIA BUILDING CODE, 2013

MASON WEST, INC.
1601 E. Miraloma Ave. Placentia, CA 92870
TEL (714) 630 - 0701, www.masonwest.com

Jiefu "Jeff" Zhang, SE
California SE No. S5270

PAGE
D13.12

HANGER ROD DIAMETER = ¾"	SUSPENDED EQUIPMENT SEISMIC CABLE BRACING SYSTEM 1250 LB MAX VERTICAL LOAD PER HANGER	KIT OPTIONS C2X

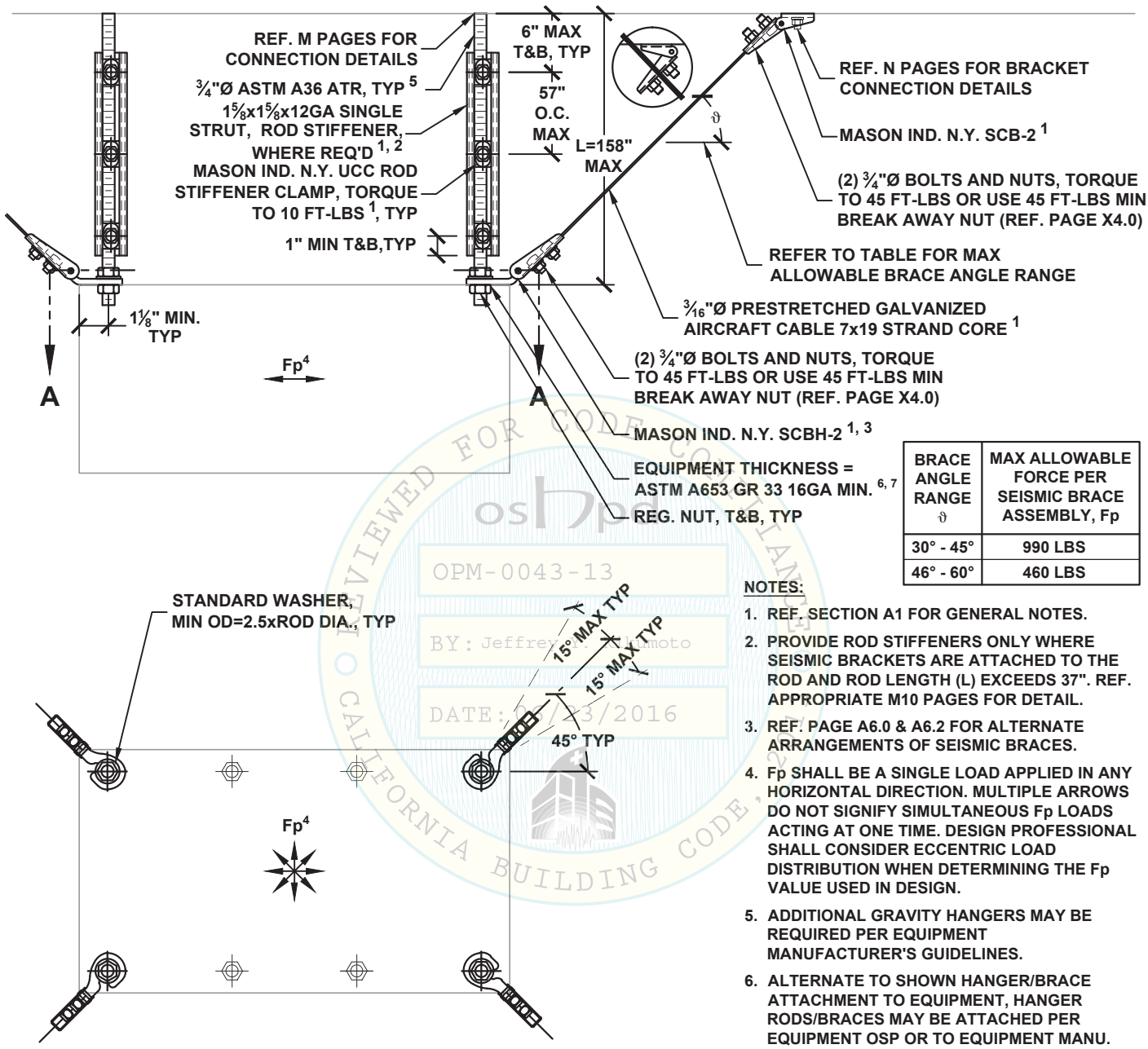

BRACE ANGLE RANGE ϑ	MAX ALLOWABLE FORCE PER SEISMIC BRACE ASSEMBLY, Fp
30° - 45°	990 LBS
46° - 60°	460 LBS

VIEW A-A

NOTES:

1. REF. SECTION A1 FOR GENERAL NOTES.
2. PROVIDE ROD STIFFENERS ONLY WHERE SEISMIC BRACKETS ARE ATTACHED TO THE ROD AND ROD LENGTH (L) EXCEEDS 37". REF. APPROPRIATE M10 PAGES FOR DETAIL.
3. REF. PAGE A6.0 & A6.2 FOR ALTERNATE ARRANGEMENTS OF SEISMIC BRACES.
4. Fp SHALL BE A SINGLE LOAD APPLIED IN ANY HORIZONTAL DIRECTION. MULTIPLE ARROWS DO NOT SIGNIFY SIMULTANEOUS Fp LOADS ACTING AT ONE TIME. DESIGN PROFESSIONAL SHALL CONSIDER ECCENTRIC LOAD DISTRIBUTION WHEN DETERMINING THE Fp VALUE USED IN DESIGN.
5. ADDITIONAL GRAVITY HANGERS MAY BE REQUIRED PER EQUIPMENT MANUFACTURER'S GUIDELINES.
6. ALTERNATE TO SHOWN HANGER/BRACE ATTACHMENT TO EQUIPMENT, HANGER RODS/BRACES MAY BE ATTACHED PER EQUIPMENT OSP OR TO EQUIPMENT MANU. CLIPS WITH ASTM A653 GR 33 16GA MIN. THICKNESS & 1⅛" MIN. STEEL EDGE DISTANCE.
7. ATTACHMENT TO THE EQUIPMENT SHALL BE DESIGNED AND SUBMITTED TO OSHPD FOR APPROVAL.

REVIEWED FOR CODE COMPLIANCE
OSHPD
OPM-0043-13
BY: Jeffrey Kikumoto
DATE: 6/23/2016
CALIFORNIA BUILDING CODE, 2013

MASON WEST, INC.
1601 E. Miraloma Ave. Placentia, CA 92870
TEL (714) 630 - 0701, www.masonwest.com

Jiefu "Jeff" Zhang, SE
California SE No. S5270

PAGE
D13.13

HANGER ROD DIAMETER = 3/8"	RECTANGULAR DUCT TRANSVERSE TRAPEZE SEISMIC SOLID BRACING SYSTEM 30 PLF MAX	KIT OPTIONS TW38T

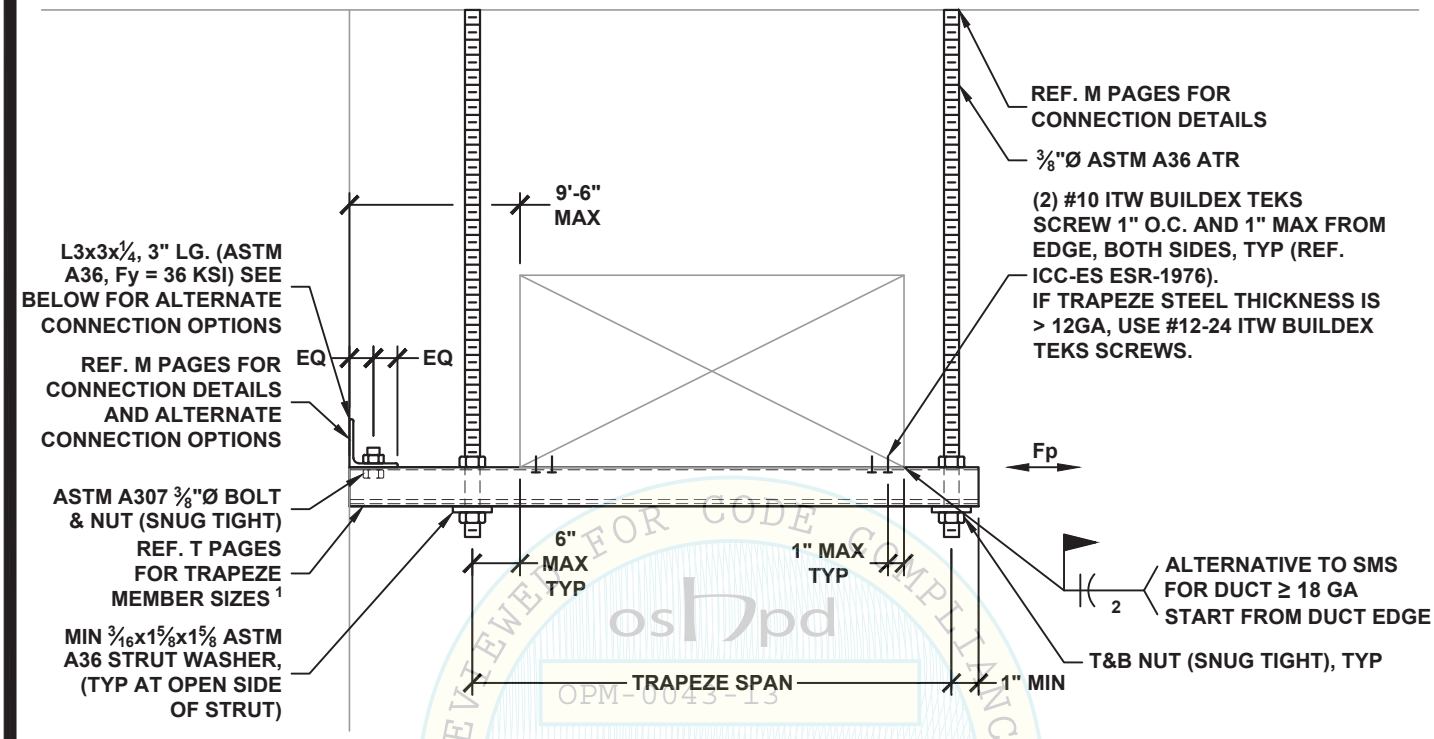

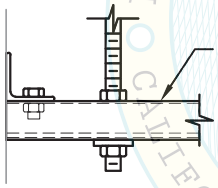

OPTION 1: SINGLE STRUT TRAPEZE

MAX ALLOWABLE FORCE PER SEISMIC BRACE ASSEMBLY, Fp 2
670 LBS

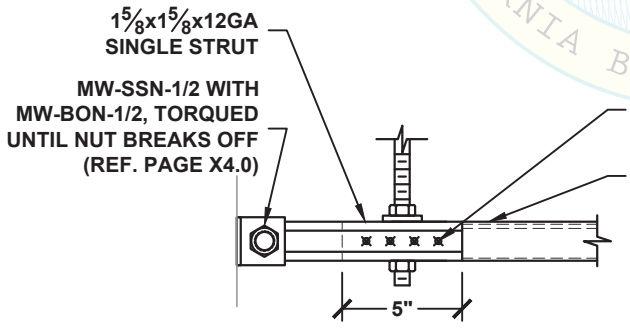

OPTION 2: SINGLE STRUT TRAPEZE

NOTES:

1. TRAPEZE MEMBER MAY BE PROVIDED WITH ROUND HOLES SIZED FOR HANGER RODS. REF. X7.0 & X7.1 FOR STRUT MEMBER DATA.
2. SEPARATE LONGITUDINAL BRACING SHALL BE PROVIDED FOR THE DUCT RUN AS DISCUSSED IN SECTION A1.

REVIEWED FOR CODE COMPLIANCE
CALIFORNIA BUILDING CODE, 2013
OPM-0043-13
BY: Jeffrey Y. Kikumoto
DATE: 06/23/2016

MASON WEST, INC.
1601 E. Miraloma Ave. Placentia, CA 92870
TEL (714) 630 - 0701, www.masonwest.com

Jiefu "Jeff" Zhang, SE
California SE No. S5270

HANGER ROD DIAMETER = 3/8"	RECTANGULAR DUCT ALL-DIRECTIONAL TRAPEZE SEISMIC SOLID BRACING SYSTEM 30 PLF MAX	KIT OPTIONS TW38A

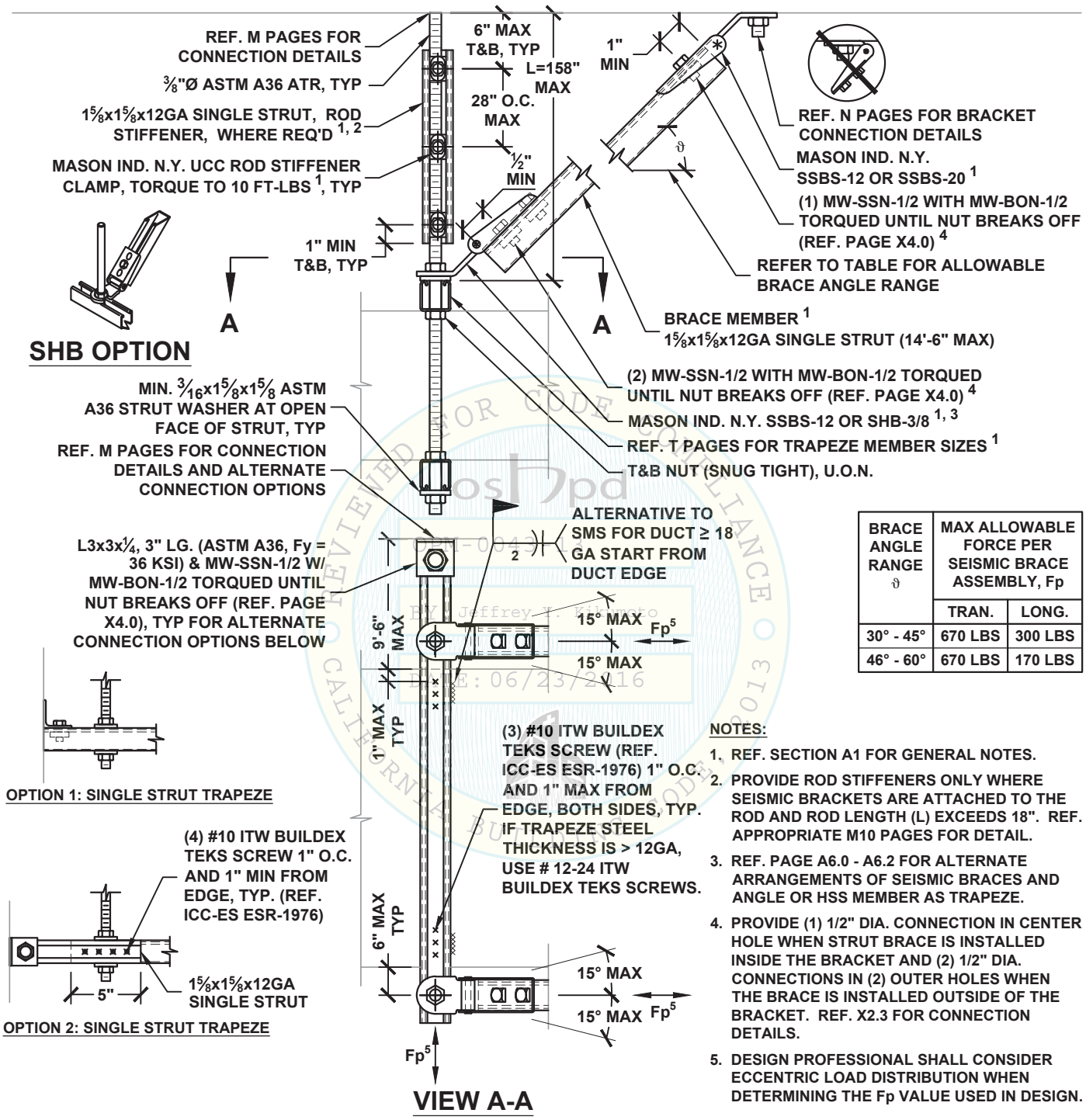

BRACE ANGLE RANGE ϑ	MAX ALLOWABLE FORCE PER SEISMIC BRACE ASSEMBLY, Fp	
	TRAN.	LONG.
30° - 45°	670 LBS	300 LBS
46° - 60°	670 LBS	170 LBS

NOTES:

1. REF. SECTION A1 FOR GENERAL NOTES.
2. PROVIDE ROD STIFFENERS ONLY WHERE SEISMIC BRACKETS ARE ATTACHED TO THE ROD AND ROD LENGTH (L) EXCEEDS 18". REF. APPROPRIATE M10 PAGES FOR DETAIL.
3. REF. PAGE A6.0 - A6.2 FOR ALTERNATE ARRANGEMENTS OF SEISMIC BRACES AND ANGLE OR HSS MEMBER AS TRAPEZE.
4. PROVIDE (1) 1/2" DIA. CONNECTION IN CENTER HOLE WHEN STRUT BRACE IS INSTALLED INSIDE THE BRACKET AND (2) 1/2" DIA. CONNECTIONS IN (2) OUTER HOLES WHEN THE BRACE IS INSTALLED OUTSIDE OF THE BRACKET. REF. X2.3 FOR CONNECTION DETAILS.
5. DESIGN PROFESSIONAL SHALL CONSIDER ECCENTRIC LOAD DISTRIBUTION WHEN DETERMINING THE Fp VALUE USED IN DESIGN.

REVIEWED FOR CODE COMPLIANCE © 2013 CALIFORNIA BUILDING CODE
OSHPD
OPM-0043-13
BY: Jeffrey K. Kikumoto
DATE: 06/23/2016

MASON WEST, INC.
1601 E. Miraloma Ave. Placentia, CA 92870
TEL (714) 630 - 0701, www.masonwest.com

Jiefu "Jeff" Zhang, SE
California SE No. S5270

PAGE
D14.12

HANGER ROD DIAMETER = ½"	RECTANGULAR DUCT TRANSVERSE TRAPEZE SEISMIC SOLID BRACING SYSTEM 60 PLF MAX	KIT OPTIONS TW50T

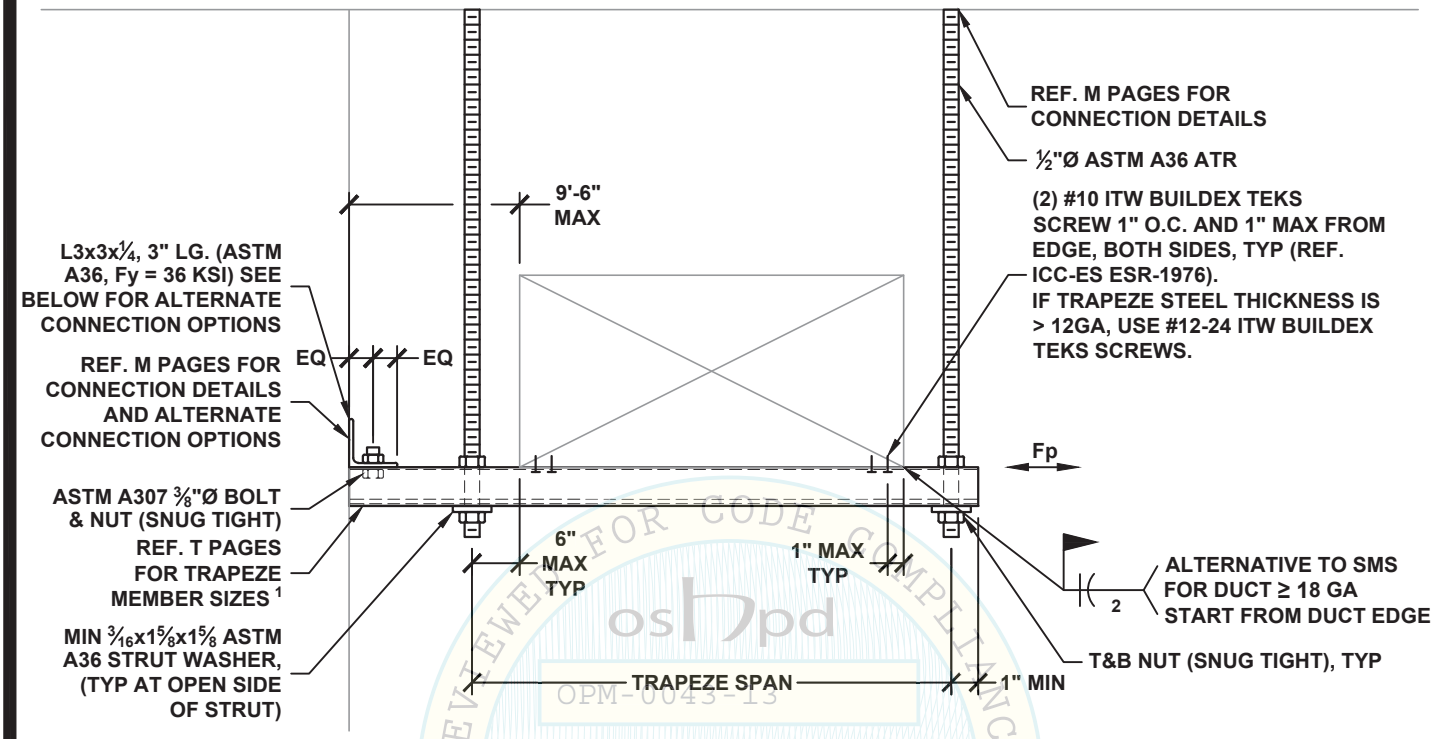

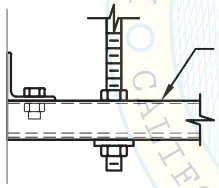

OPTION 1: SINGLE STRUT TRAPEZE

MAX ALLOWABLE FORCE PER SEISMIC BRACE ASSEMBLY, Fp 2
670 LBS

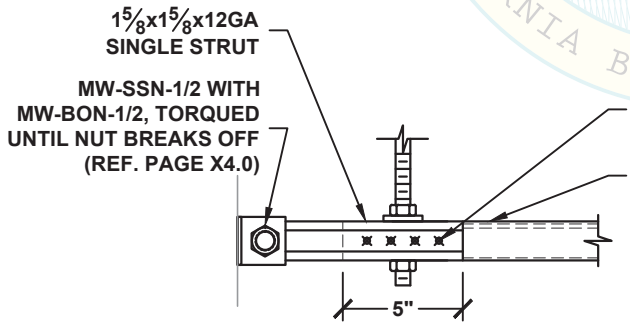

OPTION 2: SINGLE STRUT TRAPEZE

NOTES:

1. TRAPEZE MEMBER MAY BE PROVIDED WITH ROUND HOLES SIZED FOR HANGER RODS. REF. X7.0 & X7.1 FOR STRUT MEMBER DATA.
2. SEPARATE LONGITUDINAL BRACING SHALL BE PROVIDED FOR THE DUCT RUN AS DISCUSSED IN SECTION A1.

REVIEWED FOR CODE COMPLIANCE
CALIFORNIA BUILDING CODE, 2013
OPM-0043-13
BY: Jeffrey Y. Kikumoto
DATE: 06/23/2016

MASON WEST, INC.
1601 E. Miraloma Ave. Placentia, CA 92870
TEL (714) 630 - 0701, www.masonwest.com

Jiefu "Jeff" Zhang, SE
California SE No. S5270

PAGE
D14.20

HANGER ROD DIAMETER = ½"	RECTANGULAR DUCT ALL-DIRECTIONAL TRAPEZE SEISMIC SOLID BRACING SYSTEM 60 PLF MAX	KIT OPTIONS TW50A

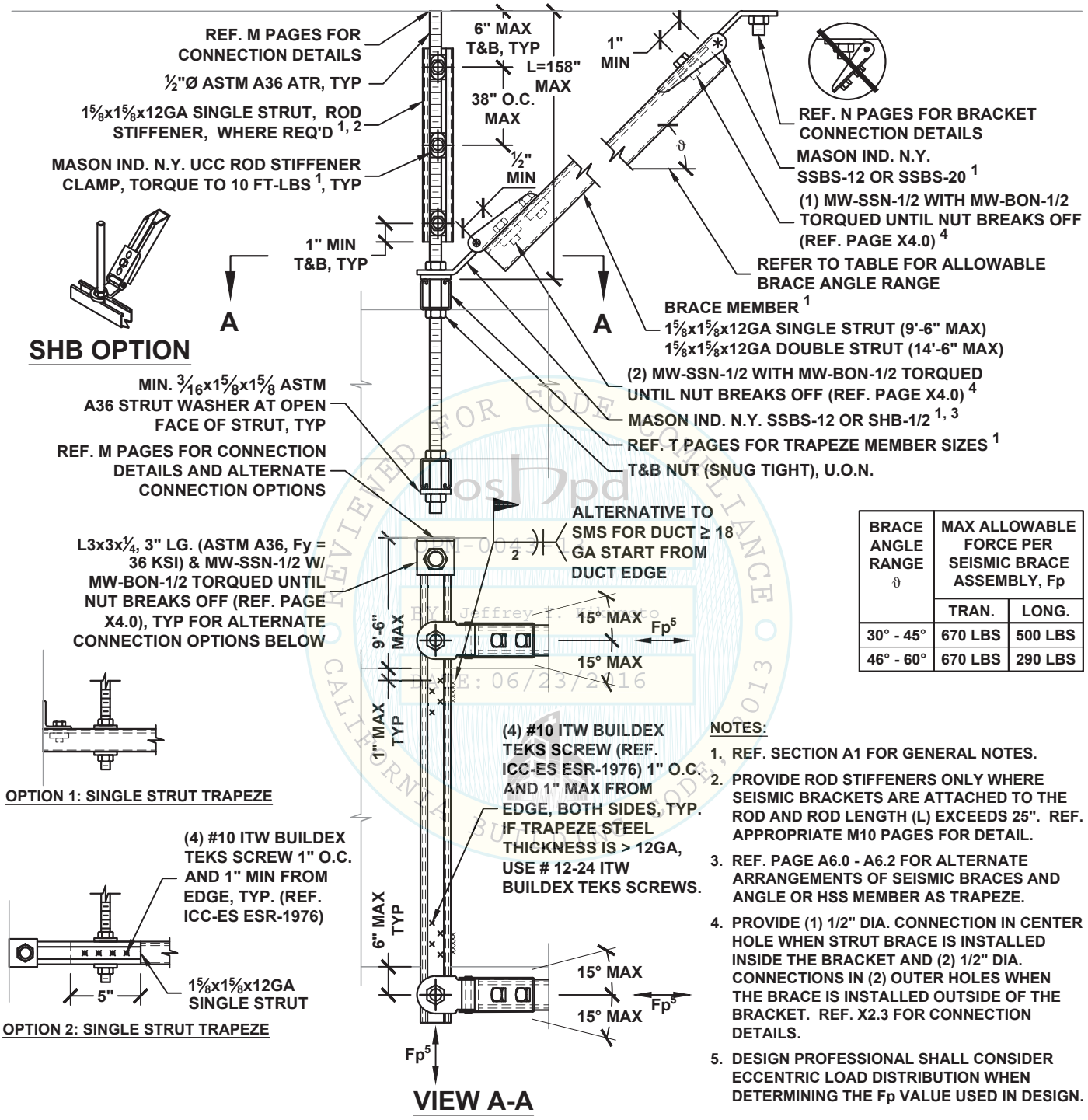

BRACE ANGLE RANGE ϑ	MAX ALLOWABLE FORCE PER SEISMIC BRACE ASSEMBLY, Fp	
	TRAN.	LONG.
30° - 45°	670 LBS	500 LBS
46° - 60°	670 LBS	290 LBS

NOTES:

1. REF. SECTION A1 FOR GENERAL NOTES.
2. PROVIDE ROD STIFFENERS ONLY WHERE SEISMIC BRACKETS ARE ATTACHED TO THE ROD AND ROD LENGTH (L) EXCEEDS 25". REF. APPROPRIATE M10 PAGES FOR DETAIL.
3. REF. PAGE A6.0 - A6.2 FOR ALTERNATE ARRANGEMENTS OF SEISMIC BRACES AND ANGLE OR HSS MEMBER AS TRAPEZE.
4. PROVIDE (1) 1/2" DIA. CONNECTION IN CENTER HOLE WHEN STRUT BRACE IS INSTALLED INSIDE THE BRACKET AND (2) 1/2" DIA. CONNECTIONS IN (2) OUTER HOLES WHEN THE BRACE IS INSTALLED OUTSIDE OF THE BRACKET. REF. X2.3 FOR CONNECTION DETAILS.
5. DESIGN PROFESSIONAL SHALL CONSIDER ECCENTRIC LOAD DISTRIBUTION WHEN DETERMINING THE Fp VALUE USED IN DESIGN.

MASON WEST, INC.
1601 E. Miraloma Ave. Placentia, CA 92870
TEL (714) 630 - 0701, www.masonwest.com

Jiefu "Jeff" Zhang, SE
California SE No. S5270

PAGE
D14.22

HANGER ROD DIAMETER = 5/8"	RECTANGULAR DUCT TRANSVERSE TRAPEZE SEISMIC SOLID BRACING SYSTEM 100 PLF MAX	KIT OPTIONS TW63T

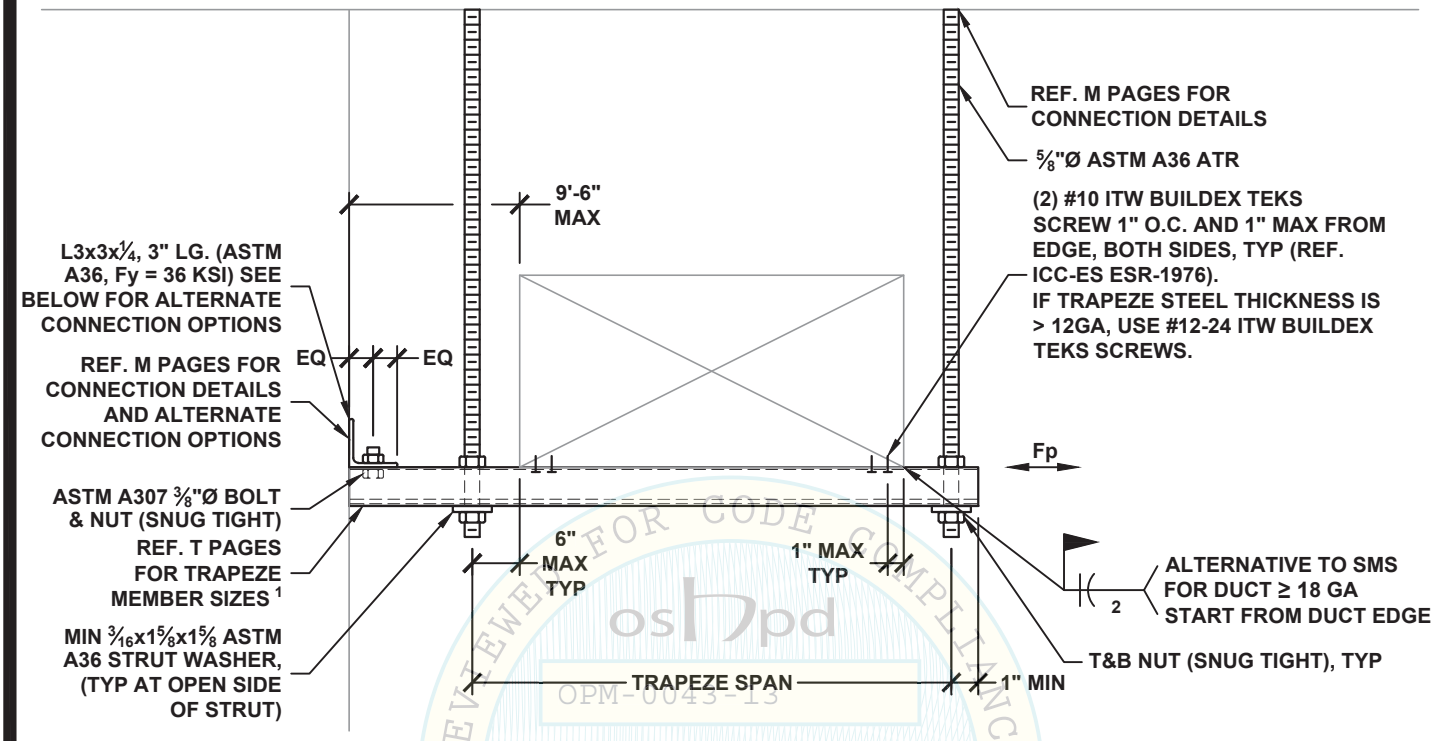

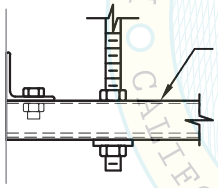

OPTION 1: SINGLE STRUT TRAPEZE

MAX ALLOWABLE FORCE PER SEISMIC BRACE ASSEMBLY, Fp 2
670 LBS

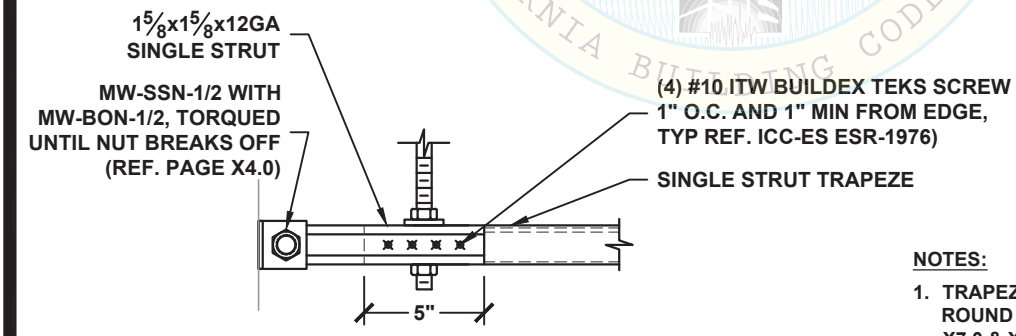

OPTION 2: SINGLE STRUT TRAPEZE

NOTES:

1. TRAPEZE MEMBER MAY BE PROVIDED WITH ROUND HOLES SIZED FOR HANGER RODS. REF. X7.0 & X7.1 FOR STRUT MEMBER DATA.
2. SEPARATE LONGITUDINAL BRACING SHALL BE PROVIDED FOR THE DUCT RUN AS DISCUSSED IN SECTION A1.

REVIEWED FOR CODE COMPLIANCE
CALIFORNIA BUILDING CODE, 2013
OPM-0043-13
BY: Jeffrey Y. Kikumoto
DATE: 06/23/2016

MASON WEST, INC.
1601 E. Miraloma Ave. Placentia, CA 92870
TEL (714) 630 - 0701, www.masonwest.com

Jiefu "Jeff" Zhang, SE
California SE No. S5270

PAGE
D14.30

HANGER ROD DIAMETER = 5/8"	RECTANGULAR DUCT ALL-DIRECTIONAL TRAPEZE SEISMIC SOLID BRACING SYSTEM 100 PLF MAX	KIT OPTIONS TW63A

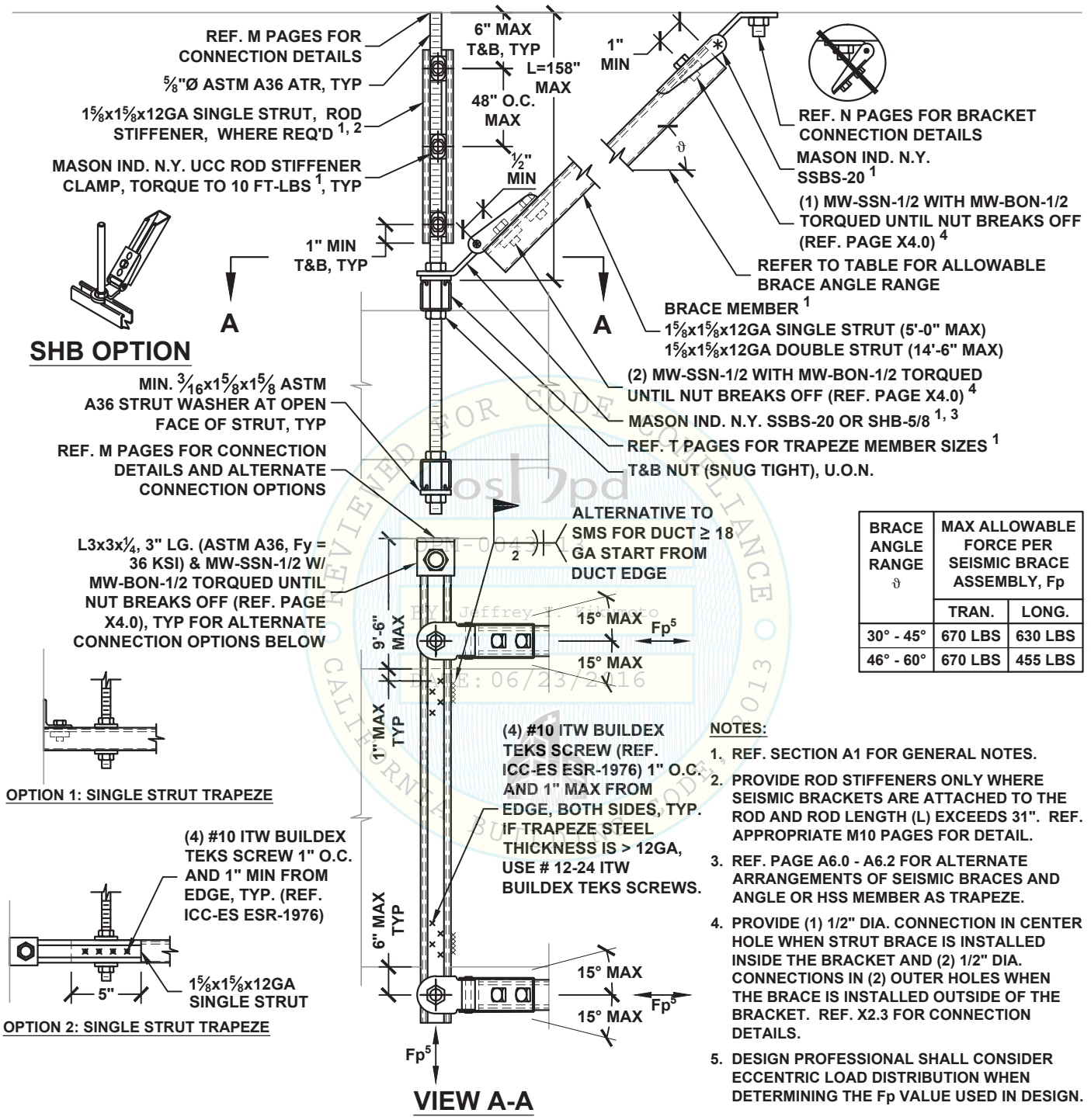

BRACE ANGLE RANGE ϑ	MAX ALLOWABLE FORCE PER SEISMIC BRACE ASSEMBLY, Fp	
	TRAN.	LONG.
30° - 45°	670 LBS	630 LBS
46° - 60°	670 LBS	455 LBS

NOTES:

1. REF. SECTION A1 FOR GENERAL NOTES.
2. PROVIDE ROD STIFFENERS ONLY WHERE SEISMIC BRACKETS ARE ATTACHED TO THE ROD AND ROD LENGTH (L) EXCEEDS 31". REF. APPROPRIATE M10 PAGES FOR DETAIL.
3. REF. PAGE A6.0 - A6.2 FOR ALTERNATE ARRANGEMENTS OF SEISMIC BRACES AND ANGLE OR HSS MEMBER AS TRAPEZE.
4. PROVIDE (1) 1/2" DIA. CONNECTION IN CENTER HOLE WHEN STRUT BRACE IS INSTALLED INSIDE THE BRACKET AND (2) 1/2" DIA. CONNECTIONS IN (2) OUTER HOLES WHEN THE BRACE IS INSTALLED OUTSIDE OF THE BRACKET. REF. X2.3 FOR CONNECTION DETAILS.
5. DESIGN PROFESSIONAL SHALL CONSIDER ECCENTRIC LOAD DISTRIBUTION WHEN DETERMINING THE Fp VALUE USED IN DESIGN.

MASON WEST, INC.
1601 E. Miraloma Ave. Placentia, CA 92870
TEL (714) 630 - 0701, www.masonwest.com

Jiefu "Jeff" Zhang, SE
California SE No. S5270

PAGE
D14.32

HANGER ROD DIAMETER = 3/8"	CABLE TRAY TRANSVERSE TRAPEZE SEISMIC SOLID BRACING SYSTEM 20 PLF MAX	KIT OPTIONS TS12T TS1220T TSH312T TSH320T

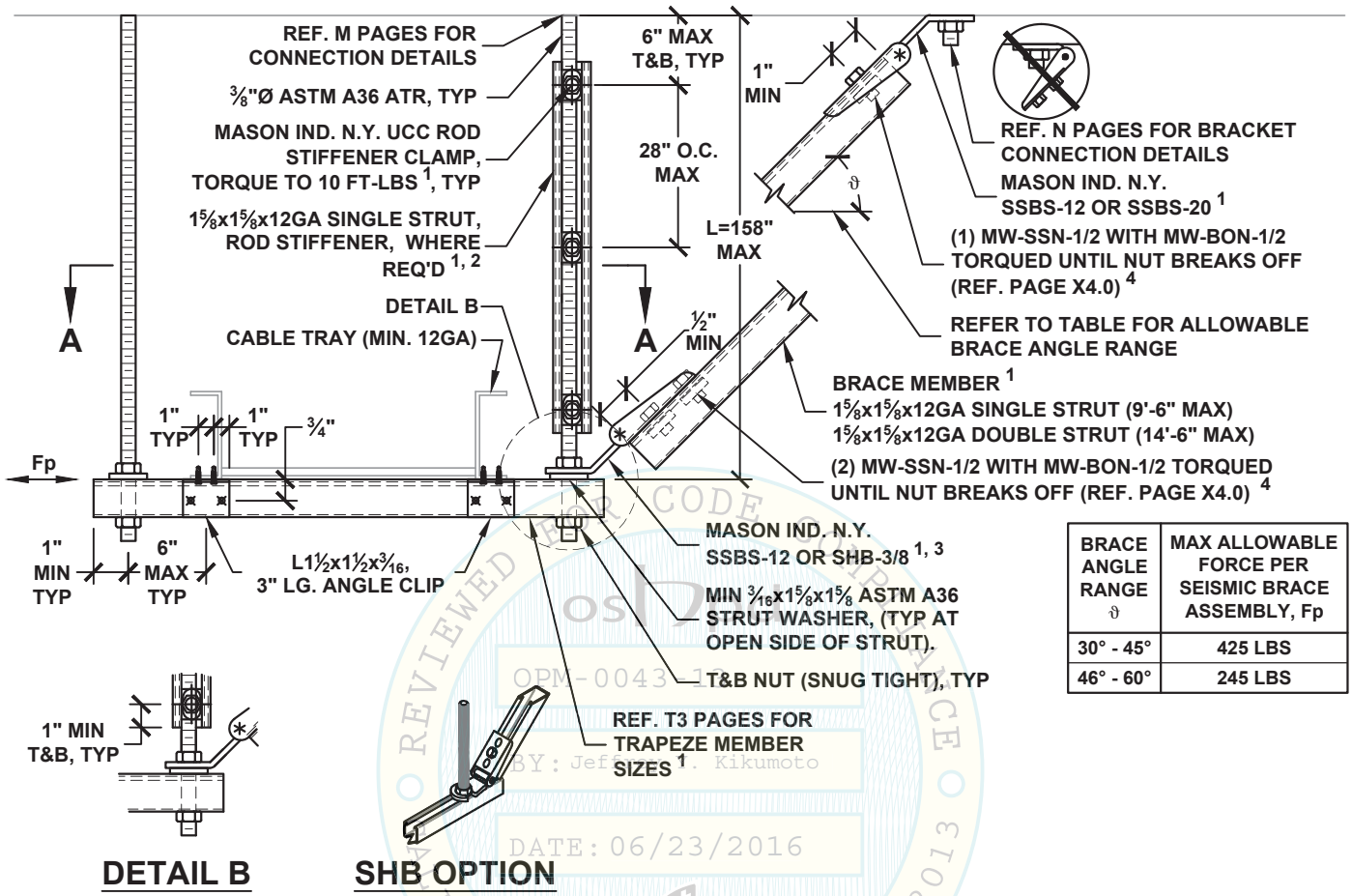

BRACE ANGLE RANGE ϑ	MAX ALLOWABLE FORCE PER SEISMIC BRACE ASSEMBLY, Fp
30° - 45°	425 LBS
46° - 60°	245 LBS

DETAIL B

SHB OPTION

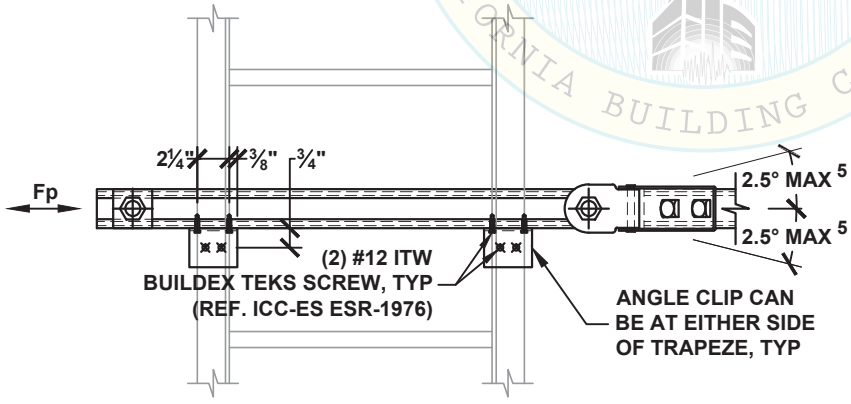

VIEW A-A

REVIEWED FOR CODE COMPLIANCE
OSHPD
OPM-0043-13
BY: Jeffrey Kikumoto
DATE: 06/23/2016
CALIFORNIA BUILDING CODE, 2013

NOTES:

1. REF. SECTION A20 FOR GENERAL NOTES.
2. PROVIDE ROD STIFFENING ONLY WHERE SEISMIC BRACKETS ARE ATTACHED TO THE ROD AND ROD LENGTH (L) EXCEEDS 18". REF. APPROPRIATE M10 PAGES FOR DETAIL.
3. REF. PAGE A25.0 FOR ALTERNATE ARRANGEMENTS OF SEISMIC BRACES.
4. PROVIDE (1) 1/2" DIA. CONNECTION IN CENTER HOLE WHEN STRUT BRACE IS INSTALLED INSIDE THE BRACKET AND (2) 1/2" DIA. CONNECTIONS IN (2) OUTER HOLES WHEN THE BRACE IS INSTALLED OUTSIDE OF THE BRACKET. REF. X2.3 FOR CONNECTION DETAILS.
5. TO INCREASE ANGLE UP TO 15°, REF. PAGE A24.1.

MASON WEST, INC.
1601 E. Miraloma Ave. Placentia, CA 92870
TEL (714) 630 - 0701, www.masonwest.com

Jiefu "Jeff" Zhang, SE
California SE No. S5270

HANGER ROD DIAMETER = ⅜"	CABLE TRAY LONGITUDINAL TRAPEZE SEISMIC SOLID BRACING SYSTEM 20 PLF MAX	KIT OPTIONS TS12L TS1220L TSH312L TSH320L

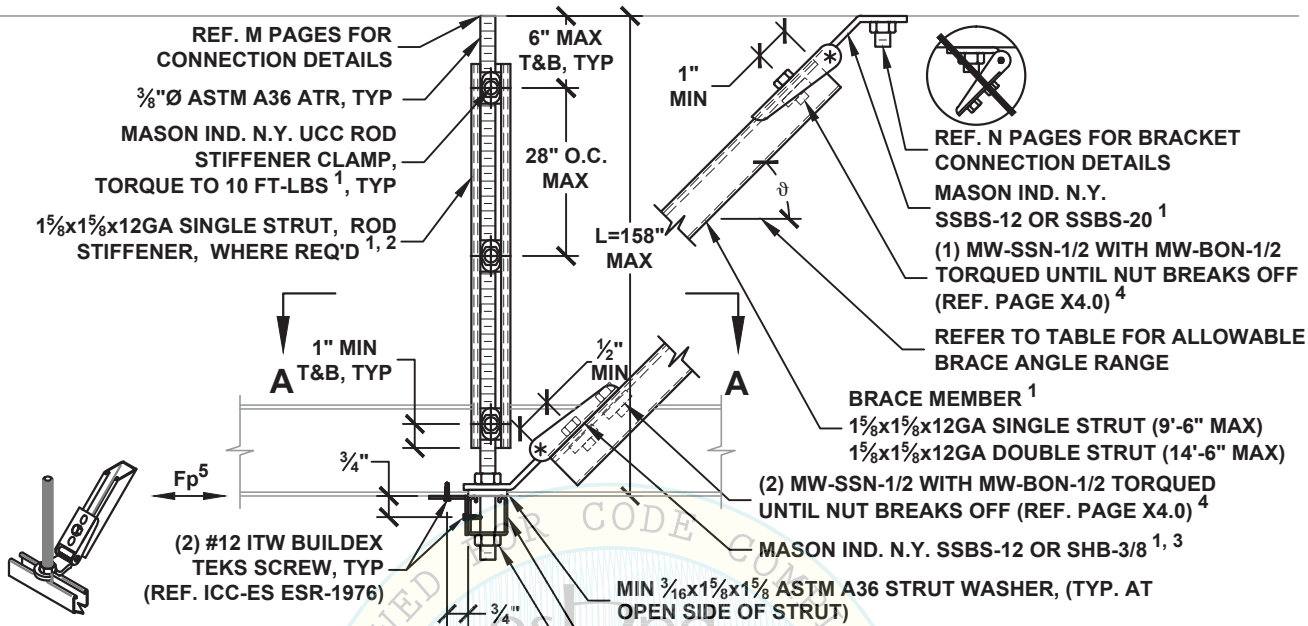

SHB OPTION

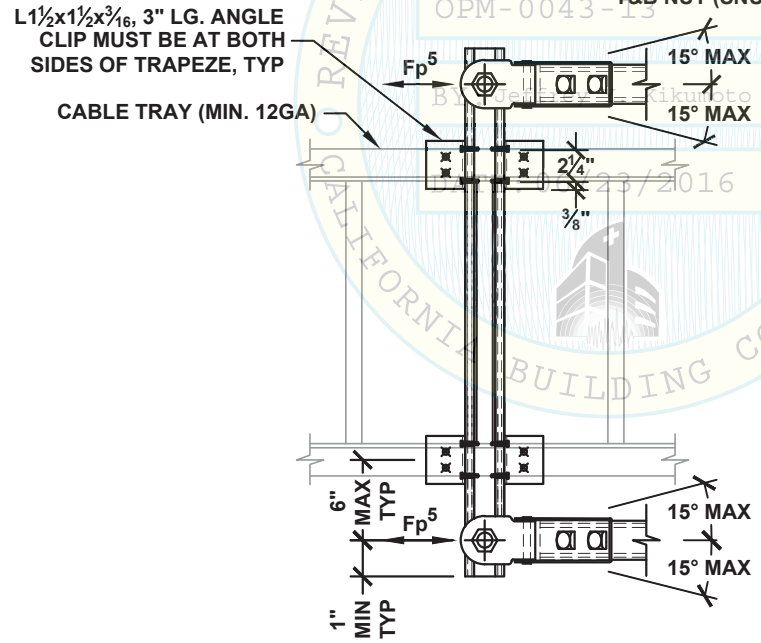

BRACE ANGLE RANGE ϑ	MAX ALLOWABLE FORCE PER SEISMIC BRACE ASSEMBLY, Fp
30° - 45°	425 LBS
46° - 60°	245 LBS

VIEW A-A

NOTES:

1. REF. SECTION A20 FOR GENERAL NOTES.
2. PROVIDE ROD STIFFENING ONLY WHERE SEISMIC BRACKETS ARE ATTACHED TO THE ROD AND ROD LENGTH (L) EXCEEDS 18". REF. APPROPRIATE M10 PAGES FOR DETAIL.
3. REF. PAGE A25.0 FOR ALTERNATE ARRANGEMENTS OF SEISMIC BRACES.
4. PROVIDE (1) 1/2" DIA. CONNECTION IN CENTER HOLE WHEN STRUT BRACE IS INSTALLED INSIDE THE BRACKET AND (2) 1/2" DIA. CONNECTIONS IN (2) OUTER HOLES WHEN THE BRACE IS INSTALLED OUTSIDE OF THE BRACKET. REF. X2.3 FOR CONNECTION DETAILS.
5. DESIGN PROFESSIONAL SHALL CONSIDER ECCENTRIC LOAD DISTRIBUTION WHEN DETERMINING THE Fp VALUE USED IN DESIGN.

MASON WEST, INC.
1601 E. Miraloma Ave. Placentia, CA 92870
TEL (714) 630 - 0701, www.masonwest.com

Jiefu "Jeff" Zhang, SE
California SE No. S5270

PAGE **E1.11**

OPM-0043-13 Reviewed for Code Compliance by Jeffrey Kikumoto 06/23/2016

HANGER ROD DIAMETER = ⅜"

CABLE TRAY ALL-DIRECTIONAL TRAPEZE SEISMIC SOLID BRACING SYSTEM 20 PLF MAX

KIT OPTIONS
TS12A
TS1220A
TSH312A
TSH320A

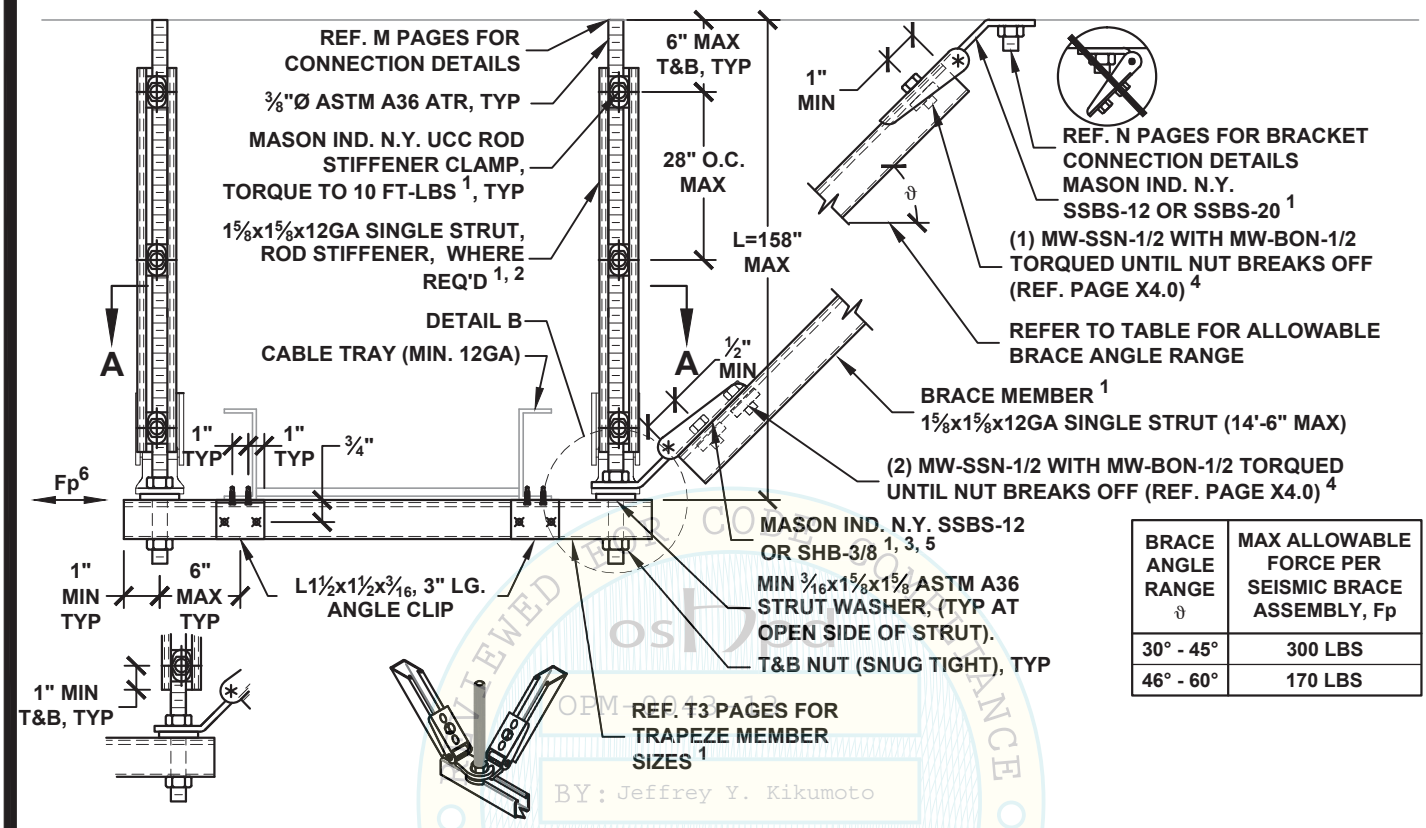

BRACE ANGLE RANGE ϑ	MAX ALLOWABLE FORCE PER SEISMIC BRACE ASSEMBLY, Fp
30° - 45°	300 LBS
46° - 60°	170 LBS

DETAIL B

SHB OPTION

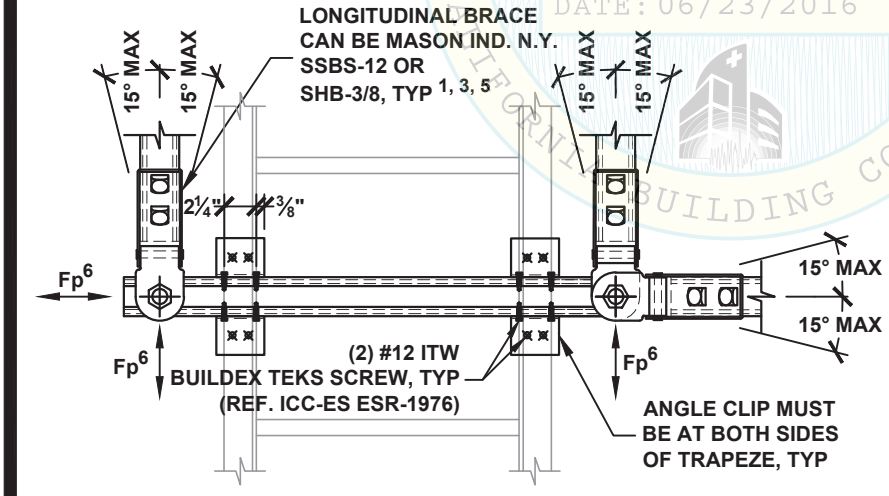

VIEW A-A

NOTES:

1. REF. SECTION A20 FOR GENERAL NOTES.
2. PROVIDE ROD STIFFENING ONLY WHERE SEISMIC BRACKETS ARE ATTACHED TO THE ROD AND ROD LENGTH (L) EXCEEDS 18". REF. APPROPRIATE M10 PAGES FOR DETAIL.
3. REF. PAGE A25.0 FOR ALTERNATE ARRANGEMENTS OF SEISMIC BRACES.
4. PROVIDE (1) 1/2" DIA. CONNECTION IN CENTER HOLE WHEN STRUT BRACE IS INSTALLED INSIDE THE BRACKET AND (2) 1/2" DIA. CONNECTIONS IN (2) OUTER HOLES WHEN THE BRACE IS INSTALLED OUTSIDE OF THE BRACKET. REF. X2.3 FOR CONNECTION DETAILS.
5. MW-KY-38 MUST BE USED ON TOP OF BOTTOM SHB WHEN STACKING (2) SHB ON THE SAME ROD, REF X2.4.
6. DESIGN PROFESSIONAL SHALL CONSIDER ECCENTRIC LOAD DISTRIBUTION WHEN DETERMINING THE Fp VALUE USED IN DESIGN.

OSHPD OPM-0043-13 BY: Jeffrey Y. Kikumoto DATE: 06/23/2016 REVIEWED FOR CODE COMPLIANCE 2013 CALIFORNIA BUILDING CODE

MASON WEST, INC.
1601 E. Miraloma Ave. Placentia, CA 92870
TEL (714) 630 - 0701, www.masonwest.com

Jiefu "Jeff" Zhang, SE
California SE No. S5270

PAGE
E1.12

HANGER ROD DIAMETER = ½"

CABLE TRAY TRANSVERSE TRAPEZE SEISMIC SOLID BRACING SYSTEM 45 PLF MAX

KIT OPTIONS
TS12T
TS1220T
TSH412T
TSH420T

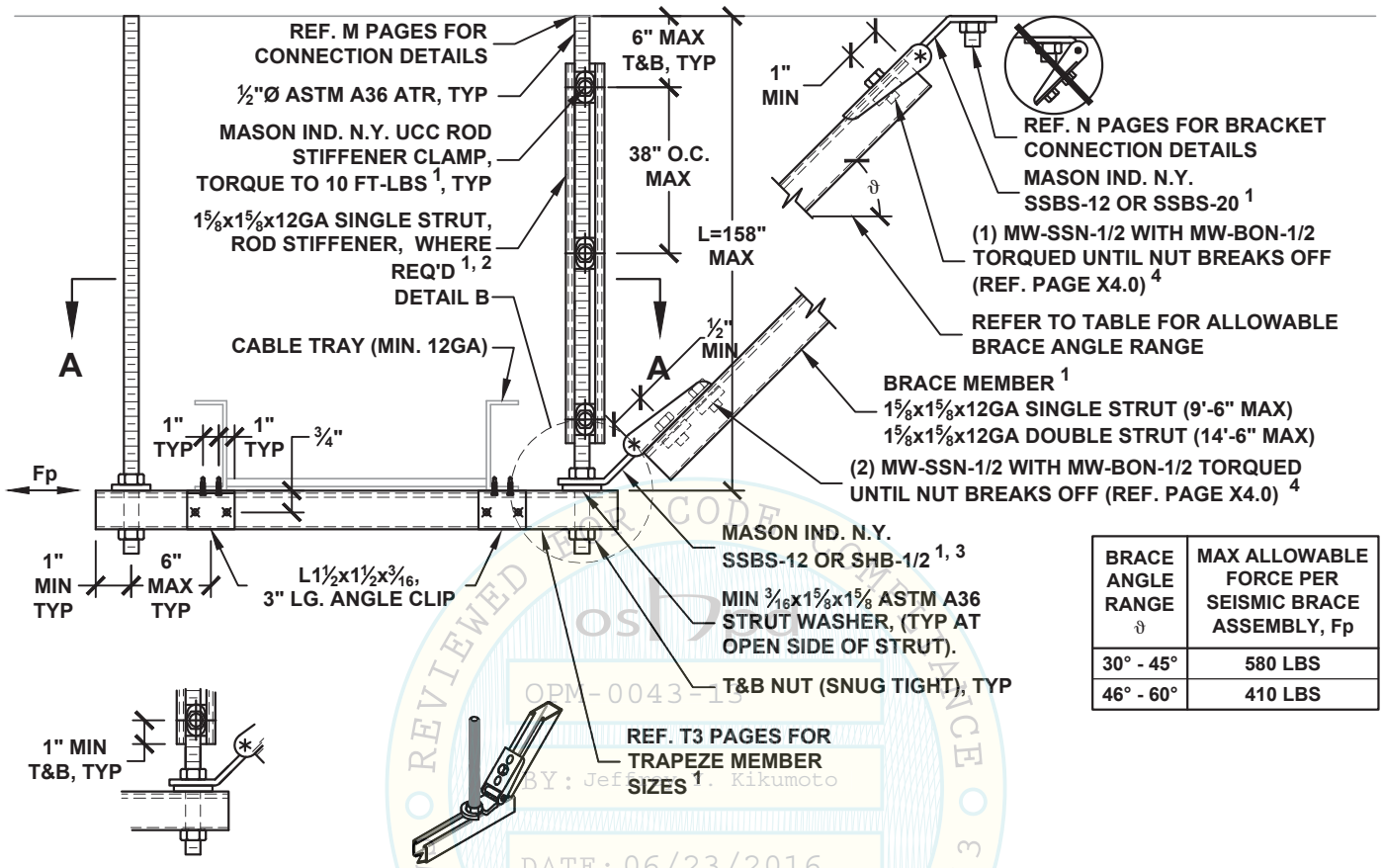

BRACE ANGLE RANGE ϑ	MAX ALLOWABLE FORCE PER SEISMIC BRACE ASSEMBLY, Fp
30° - 45°	580 LBS
46° - 60°	410 LBS

DETAIL B

SHB OPTION

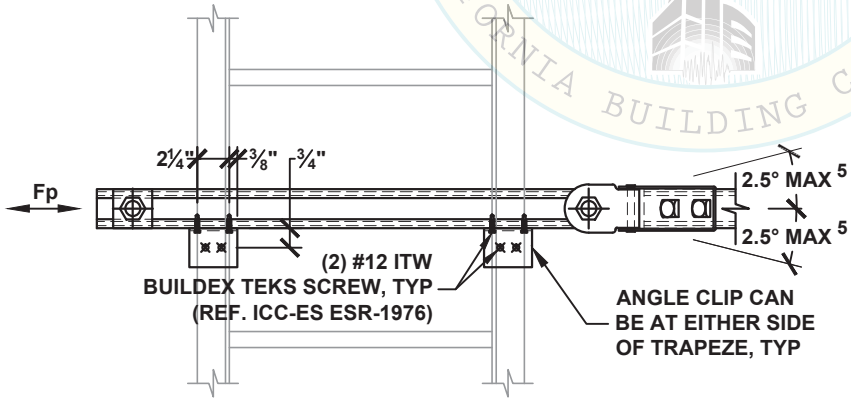

VIEW A-A

REVIEWED FOR CODE COMPLIANCE
OSHPD
OPM-0043-13
BY: Jeffrey Kikumoto
DATE: 06/23/2016
CALIFORNIA BUILDING CODE, 2013

NOTES:

1. REF. SECTION A20 FOR GENERAL NOTES.
2. PROVIDE ROD STIFFENING ONLY WHERE SEISMIC BRACKETS ARE ATTACHED TO THE ROD AND ROD LENGTH (L) EXCEEDS 25". REF. APPROPRIATE M10 PAGES FOR DETAIL.
3. REF. PAGE A25.0 FOR ALTERNATE ARRANGEMENTS OF SEISMIC BRACES.
4. PROVIDE (1) 1/2" DIA. CONNECTION IN CENTER HOLE WHEN STRUT BRACE IS INSTALLED INSIDE THE BRACKET AND (2) 1/2" DIA. CONNECTIONS IN (2) OUTER HOLES WHEN THE BRACE IS INSTALLED OUTSIDE OF THE BRACKET. REF. X2.3 FOR CONNECTION DETAILS.
5. TO INCREASE ANGLE UP TO 15°, REF. PAGE A24.1.

MASON WEST, INC.
1601 E. Miraloma Ave. Placentia, CA 92870
TEL (714) 630 - 0701, www.masonwest.com

Jiefu "Jeff" Zhang, SE
California SE No. S5270

PAGE
E1.20

HANGER ROD DIAMETER = ½"

CABLE TRAY LONGITUDINAL TRAPEZE SEISMIC SOLID BRACING SYSTEM 45 PLF MAX

KIT OPTIONS
TS12L
TS1220L
TSH412L
TSH420L

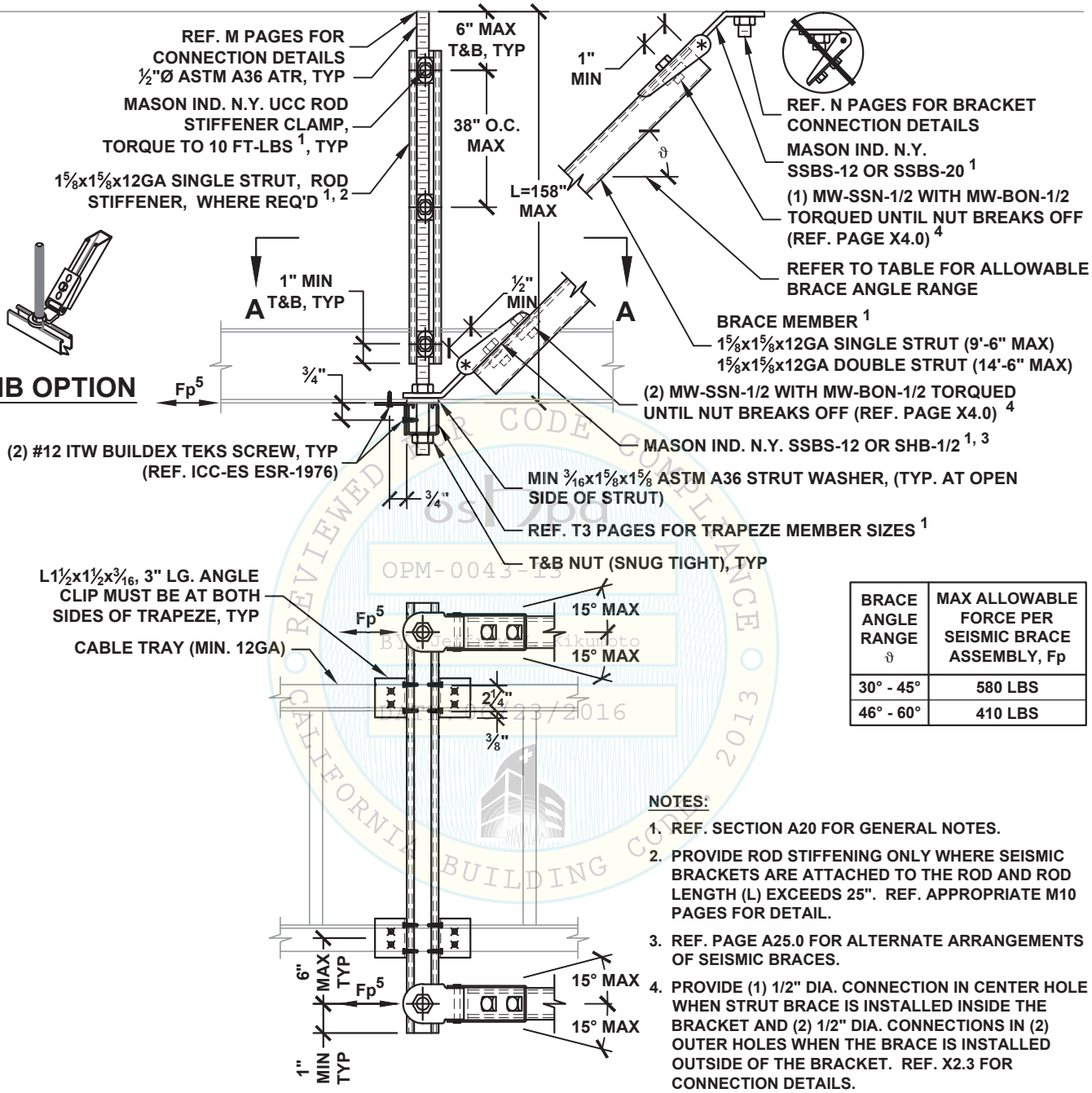

VIEW A-A

BRACE ANGLE RANGE ϑ	MAX ALLOWABLE FORCE PER SEISMIC BRACE ASSEMBLY, Fp
30° - 45°	580 LBS
46° - 60°	410 LBS

NOTES:

1. REF. SECTION A20 FOR GENERAL NOTES.
2. PROVIDE ROD STIFFENING ONLY WHERE SEISMIC BRACKETS ARE ATTACHED TO THE ROD AND ROD LENGTH (L) EXCEEDS 25". REF. APPROPRIATE M10 PAGES FOR DETAIL.
3. REF. PAGE A25.0 FOR ALTERNATE ARRANGEMENTS OF SEISMIC BRACES.
4. PROVIDE (1) 1/2" DIA. CONNECTION IN CENTER HOLE WHEN STRUT BRACE IS INSTALLED INSIDE THE BRACKET AND (2) 1/2" DIA. CONNECTIONS IN (2) OUTER HOLES WHEN THE BRACE IS INSTALLED OUTSIDE OF THE BRACKET. REF. X2.3 FOR CONNECTION DETAILS.
5. DESIGN PROFESSIONAL SHALL CONSIDER ECCENTRIC LOAD DISTRIBUTION WHEN DETERMINING THE Fp VALUE USED IN DESIGN.

REVIEWED FOR CODE COMPLIANCE
CALIFORNIA BUILDING CODE 2013
OPM-0043-13
Reviewed by: Jeffrey Kikumoto
Date: 06/23/2016

MASON WEST, INC.
1601 E. Miraloma Ave. Placentia, CA 92870
TEL (714) 630 - 0701, www.masonwest.com

Jiefu "Jeff" Zhang, SE
California SE No. S5270

PAGE
E1.21

HANGER ROD DIAMETER = ½"

CABLE TRAY ALL-DIRECTIONAL TRAPEZE SEISMIC SOLID BRACING SYSTEM 45 PLF MAX

KIT OPTIONS
TS12A
TS1220A
TSH412A
TSH420A

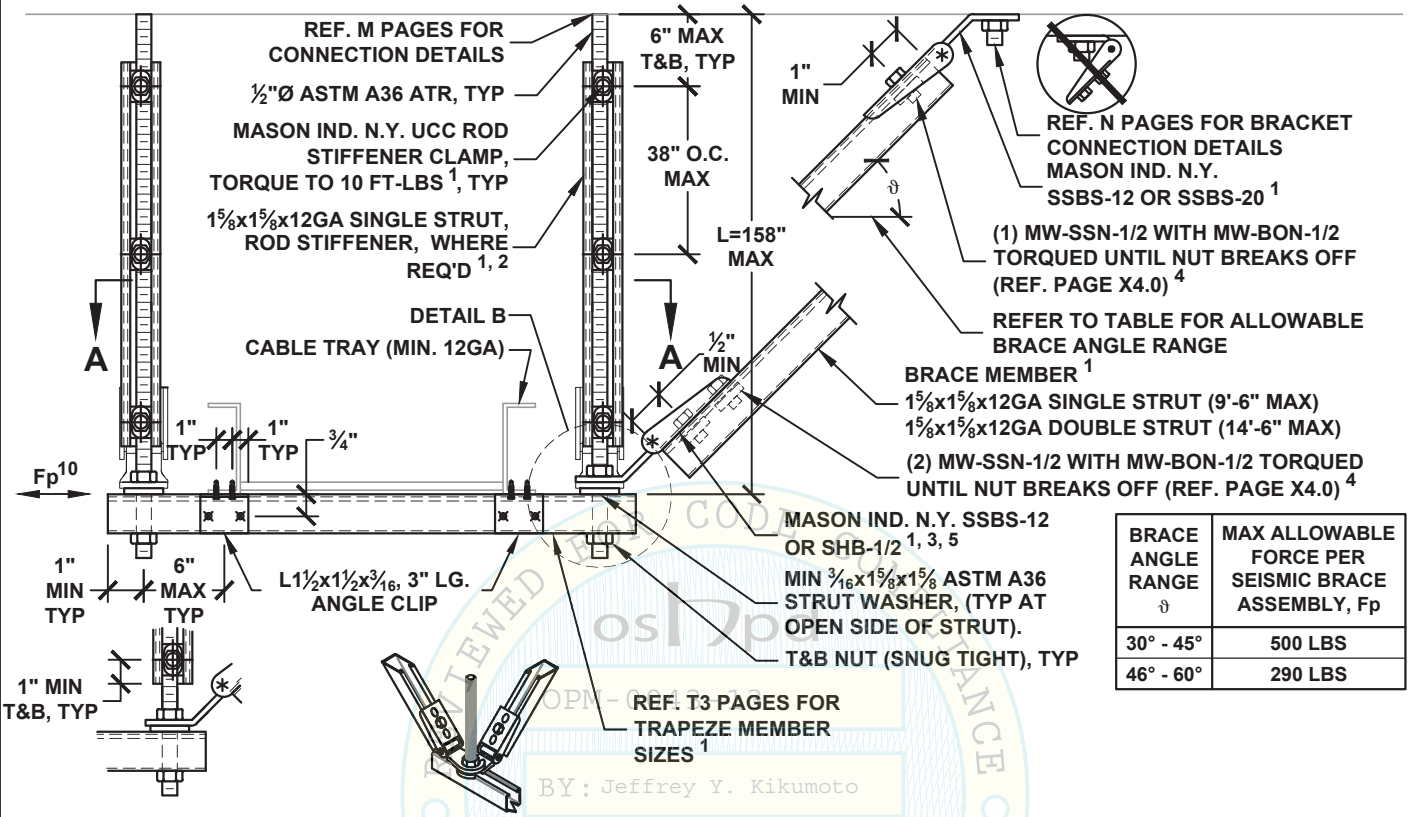

BRACE ANGLE RANGE ϑ	MAX ALLOWABLE FORCE PER SEISMIC BRACE ASSEMBLY, Fp
30° - 45°	500 LBS
46° - 60°	290 LBS

DETAIL B

SHB OPTION

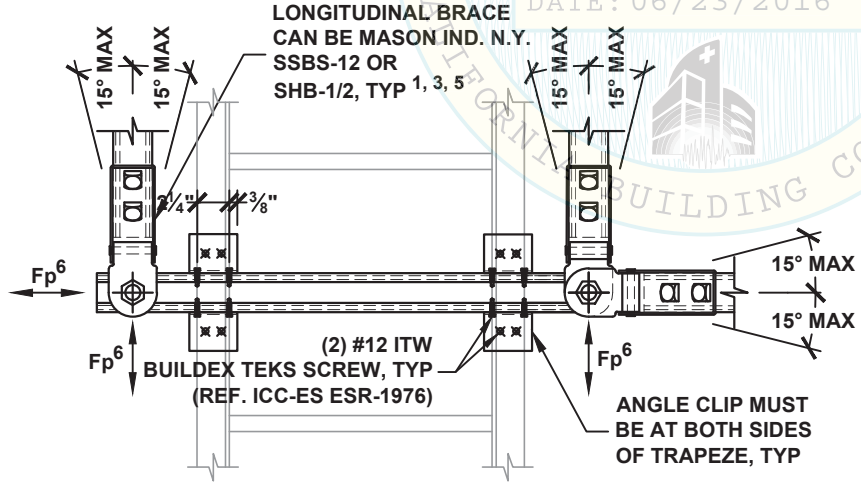

VIEW A-A

NOTES:

1. REF. SECTION A20 FOR GENERAL NOTES.
2. PROVIDE ROD STIFFENING ONLY WHERE SEISMIC BRACKETS ARE ATTACHED TO THE ROD AND ROD LENGTH (L) EXCEEDS 25". REF. APPROPRIATE M10 PAGES FOR DETAIL.
3. REF. PAGE A25.0 FOR ALTERNATE ARRANGEMENTS OF SEISMIC BRACES.
4. PROVIDE (1) 1/2" DIA. CONNECTION IN CENTER HOLE WHEN STRUT BRACE IS INSTALLED INSIDE THE BRACKET AND (2) 1/2" DIA. CONNECTIONS IN (2) OUTER HOLES WHEN THE BRACE IS INSTALLED OUTSIDE OF THE BRACKET. REF. X2.3 FOR CONNECTION DETAILS.
5. MW-KY-50 MUST BE USED ON TOP OF BOTTOM SHB WHEN STACKING (2) SHB ON THE SAME ROD, REF X2.4.
6. DESIGN PROFESSIONAL SHALL CONSIDER ECCENTRIC LOAD DISTRIBUTION WHEN DETERMINING THE Fp VALUE USED IN DESIGN.

OSHPD PREAPPROVED CODE COMPLIANCE OF THE CALIFORNIA BUILDING CODE, 2013
OPM-0043-13
BY: Jeffrey Y. Kikumoto
DATE: 06/23/2016

MASON WEST, INC.
1601 E. Miraloma Ave. Placentia, CA 92870
TEL (714) 630 - 0701, www.masonwest.com

Jiefu "Jeff" Zhang, SE
California SE No. S5270

PAGE
E1.22

HANGER ROD DIAMETER = 5/8"	CABLE TRAY TRANSVERSE TRAPEZE SEISMIC SOLID BRACING SYSTEM 85 PLF MAX	KIT OPTIONS TS20T TSH520T

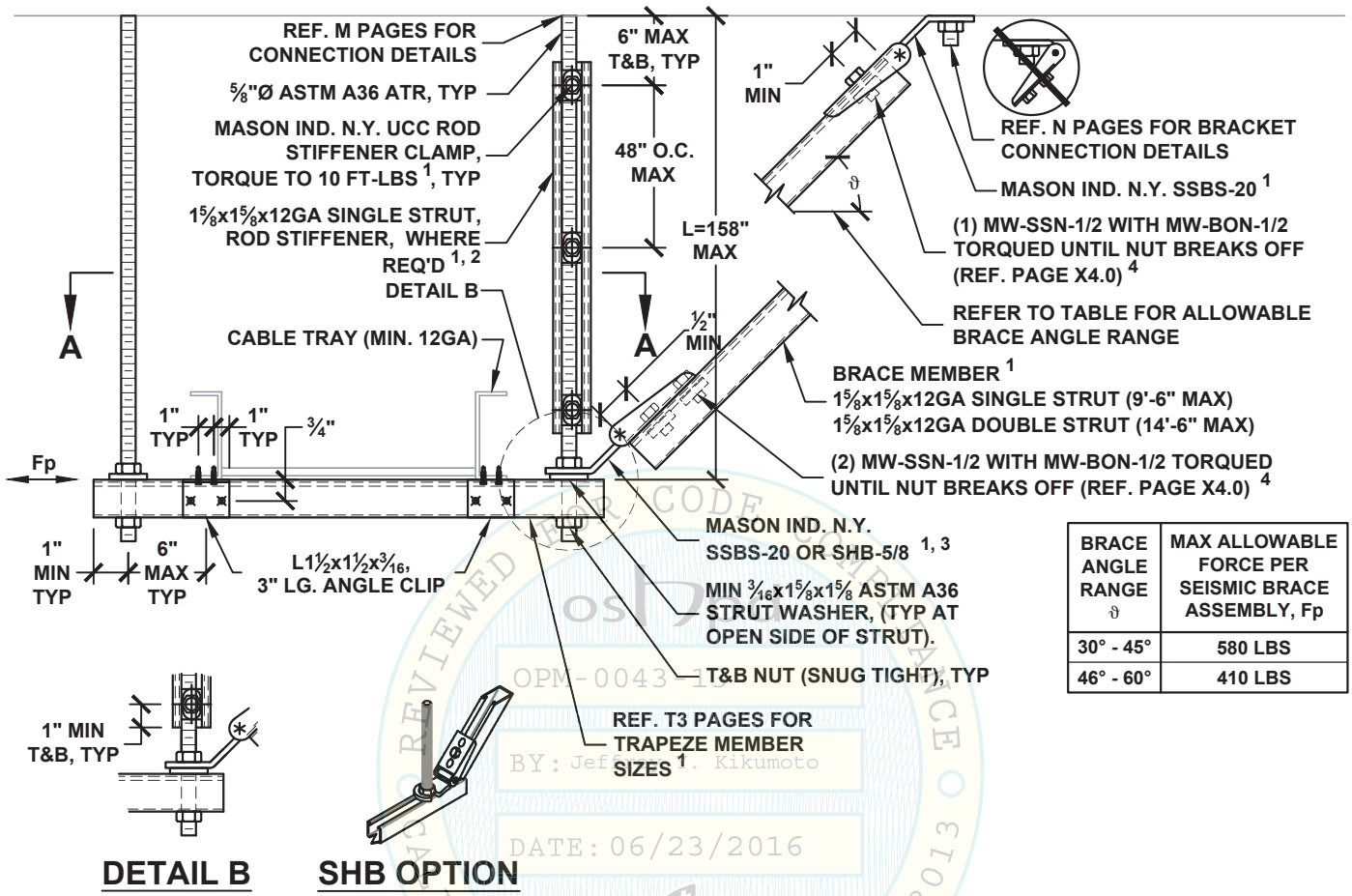

BRACE ANGLE RANGE ϑ	MAX ALLOWABLE FORCE PER SEISMIC BRACE ASSEMBLY, Fp
30° - 45°	580 LBS
46° - 60°	410 LBS

DETAIL B

SHB OPTION

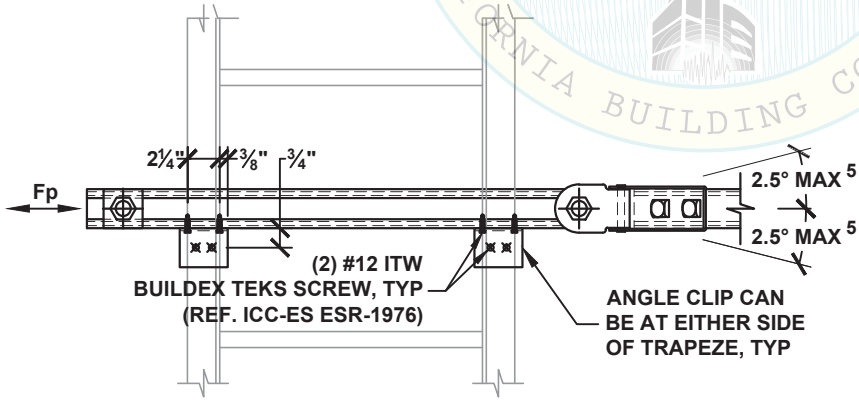

VIEW A-A

NOTES:

1. REF. SECTION A20 FOR GENERAL NOTES.
2. PROVIDE ROD STIFFENING ONLY WHERE SEISMIC BRACKETS ARE ATTACHED TO THE ROD AND ROD LENGTH (L) EXCEEDS 31". REF. APPROPRIATE M10 PAGES FOR DETAIL.
3. REF. PAGE A25.0 FOR ALTERNATE ARRANGEMENTS OF SEISMIC BRACES.
4. PROVIDE (1) 1/2" DIA. CONNECTION IN CENTER HOLE WHEN STRUT BRACE IS INSTALLED INSIDE THE BRACKET AND (2) 1/2" DIA. CONNECTIONS IN (2) OUTER HOLES WHEN THE BRACE IS INSTALLED OUTSIDE OF THE BRACKET. REF. X2.3 FOR CONNECTION DETAILS.
5. TO INCREASE ANGLE UP TO 15°, REF. PAGE A24.1.

OSD REVIEWED FOR CODE COMPLIANCE
OPM-0043-13
BY: Jeffrey Kikumoto
DATE: 06/23/2016
CALIFORNIA BUILDING CODE, 2013

MASON WEST, INC.
1601 E. Miraloma Ave. Placentia, CA 92870
TEL (714) 630 - 0701, www.masonwest.com

Jiefu "Jeff" Zhang, SE
California SE No. S5270

PAGE
E1.30

HANGER ROD DIAMETER = 5/8"	CABLE TRAY LONGITUDINAL TRAPEZE SEISMIC SOLID BRACING SYSTEM 85 PLF MAX	KIT OPTIONS TS20L TSH520L

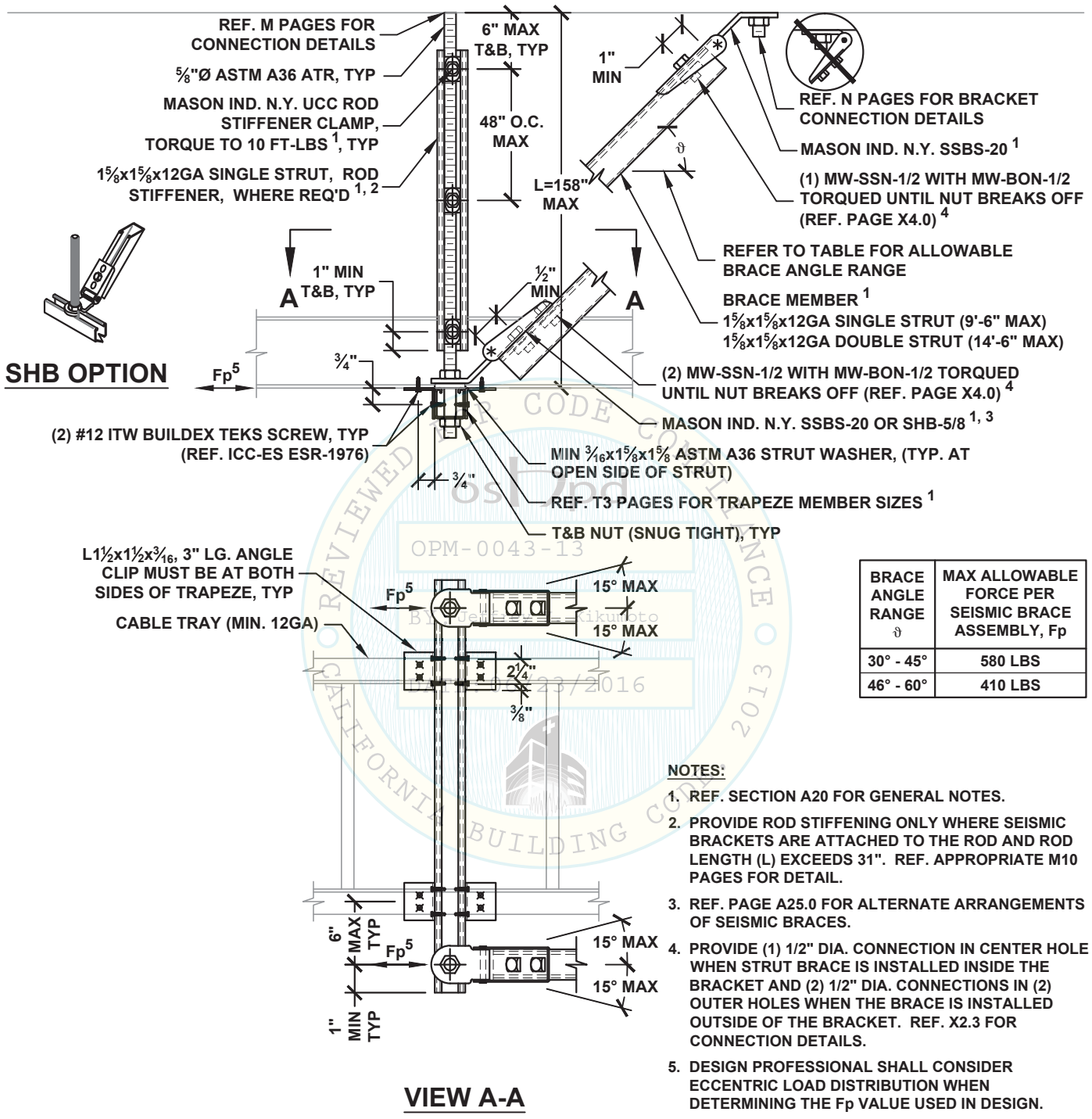

BRACE ANGLE RANGE ϑ	MAX ALLOWABLE FORCE PER SEISMIC BRACE ASSEMBLY, Fp
30° - 45°	580 LBS
46° - 60°	410 LBS

NOTES:

1. REF. SECTION A20 FOR GENERAL NOTES.
2. PROVIDE ROD STIFFENING ONLY WHERE SEISMIC BRACKETS ARE ATTACHED TO THE ROD AND ROD LENGTH (L) EXCEEDS 31". REF. APPROPRIATE M10 PAGES FOR DETAIL.
3. REF. PAGE A25.0 FOR ALTERNATE ARRANGEMENTS OF SEISMIC BRACES.
4. PROVIDE (1) 1/2" DIA. CONNECTION IN CENTER HOLE WHEN STRUT BRACE IS INSTALLED INSIDE THE BRACKET AND (2) 1/2" DIA. CONNECTIONS IN (2) OUTER HOLES WHEN THE BRACE IS INSTALLED OUTSIDE OF THE BRACKET. REF. X2.3 FOR CONNECTION DETAILS.
5. DESIGN PROFESSIONAL SHALL CONSIDER ECCENTRIC LOAD DISTRIBUTION WHEN DETERMINING THE Fp VALUE USED IN DESIGN.

OSHPD PREAPPROVED
OPM-0043-13
Reviewed by Jeffrey Kikumoto
06/23/2016
CALIFORNIA BUILDING CODE COMPLIANCE 2013

MASON WEST, INC.
1601 E. Miraloma Ave. Placentia, CA 92870
TEL (714) 630 - 0701, www.masonwest.com

Jiefu "Jeff" Zhang, SE
California SE No. S5270

PAGE
E1.31

HANGER ROD DIAMETER = 5/8"	CABLE TRAY ALL-DIRECTIONAL TRAPEZE SEISMIC SOLID BRACING SYSTEM 85 PLF MAX	KIT OPTIONS TS20A TSH520A

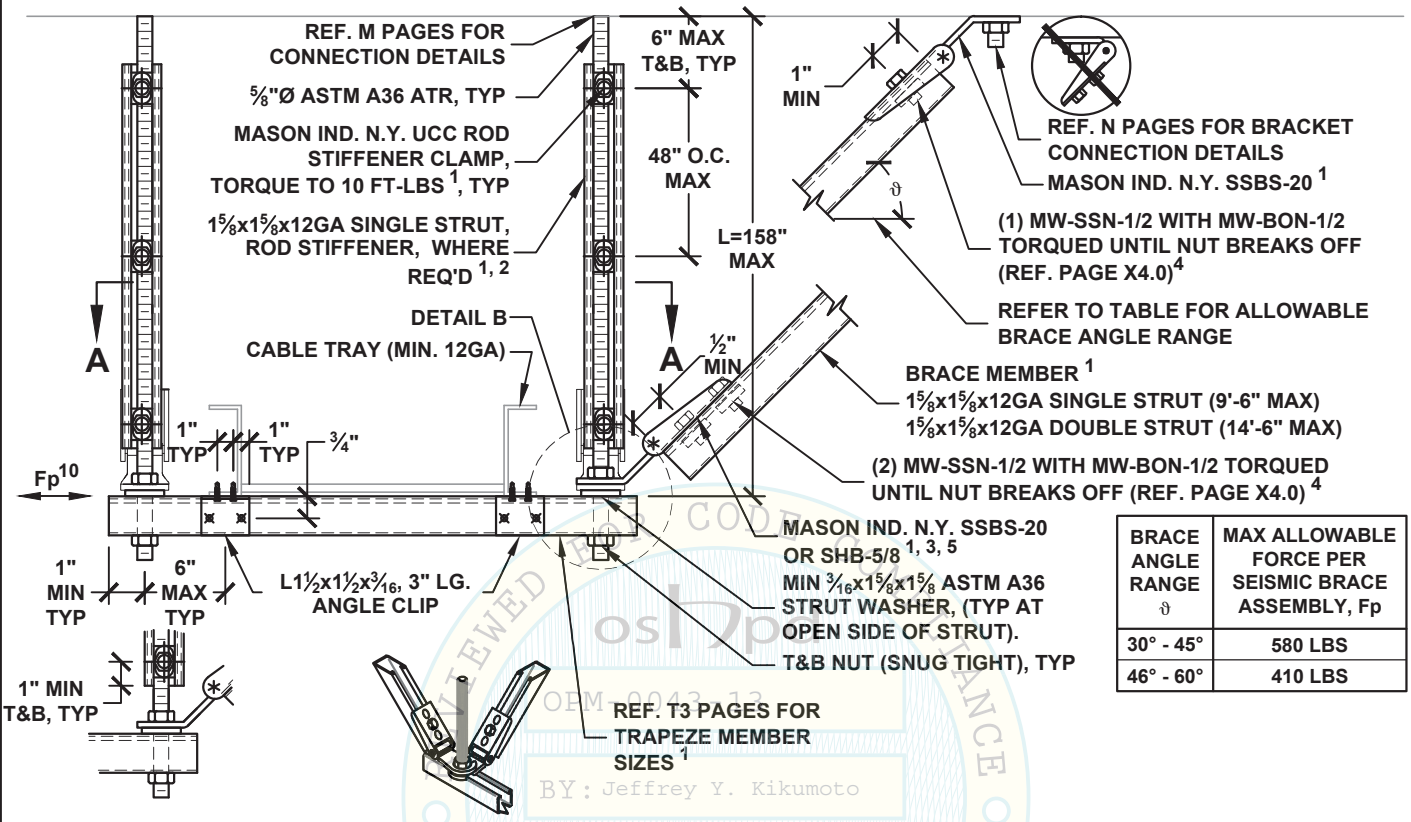

BRACE ANGLE RANGE ϑ	MAX ALLOWABLE FORCE PER SEISMIC BRACE ASSEMBLY, Fp
30° - 45°	580 LBS
46° - 60°	410 LBS

DETAIL B

SHB OPTION

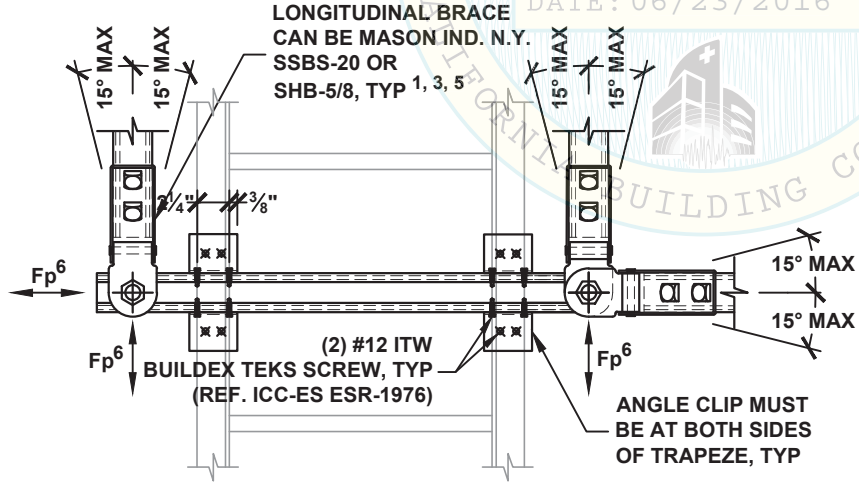

VIEW A-A

NOTES:

1. REF. SECTION A20 FOR GENERAL NOTES..
2. PROVIDE ROD STIFFENING ONLY WHERE SEISMIC BRACKETS ARE ATTACHED TO THE ROD AND ROD LENGTH (L) EXCEEDS 31". REF. APPROPRIATE M10 PAGES FOR DETAIL.
3. REF. PAGE A25.0 FOR ALTERNATE ARRANGEMENTS OF SEISMIC BRACES.
4. PROVIDE (1) 1/2" DIA. CONNECTION IN CENTER HOLE WHEN STRUT BRACE IS INSTALLED INSIDE THE BRACKET AND (2) 1/2" DIA. CONNECTIONS IN (2) OUTER HOLES WHEN THE BRACE IS INSTALLED OUTSIDE OF THE BRACKET. REF. X2.3 FOR CONNECTION DETAILS.
5. MW-KY-63 MUST BE USED ON TOP OF BOTTOM SHB WHEN STACKING (2) SHB ON THE SAME ROD, REF X2.4.
6. DESIGN PROFESSIONAL SHALL CONSIDER ECCENTRIC LOAD DISTRIBUTION WHEN DETERMINING THE Fp VALUE USED IN DESIGN.

OSHPD PREAPPROVED
OPM-0043-13
BY: Jeffrey Y. Kikumoto
DATE: 06/23/2016
REVIEWED FOR CODE COMPLIANCE OF THE CALIFORNIA BUILDING CODE, 2013

MASON WEST, INC.
1601 E. Miraloma Ave. Placentia, CA 92870
TEL (714) 630 - 0701, www.masonwest.com

Jiefu "Jeff" Zhang, SE
California SE No. S5270

PAGE
E1.32

HANGER ROD DIAMETER = 3/8"	CABLE TRAY TRANSVERSE TRAPEZE SEISMIC CABLE BRACING SYSTEM 20 PLF MAX	KIT OPTIONS TC0T

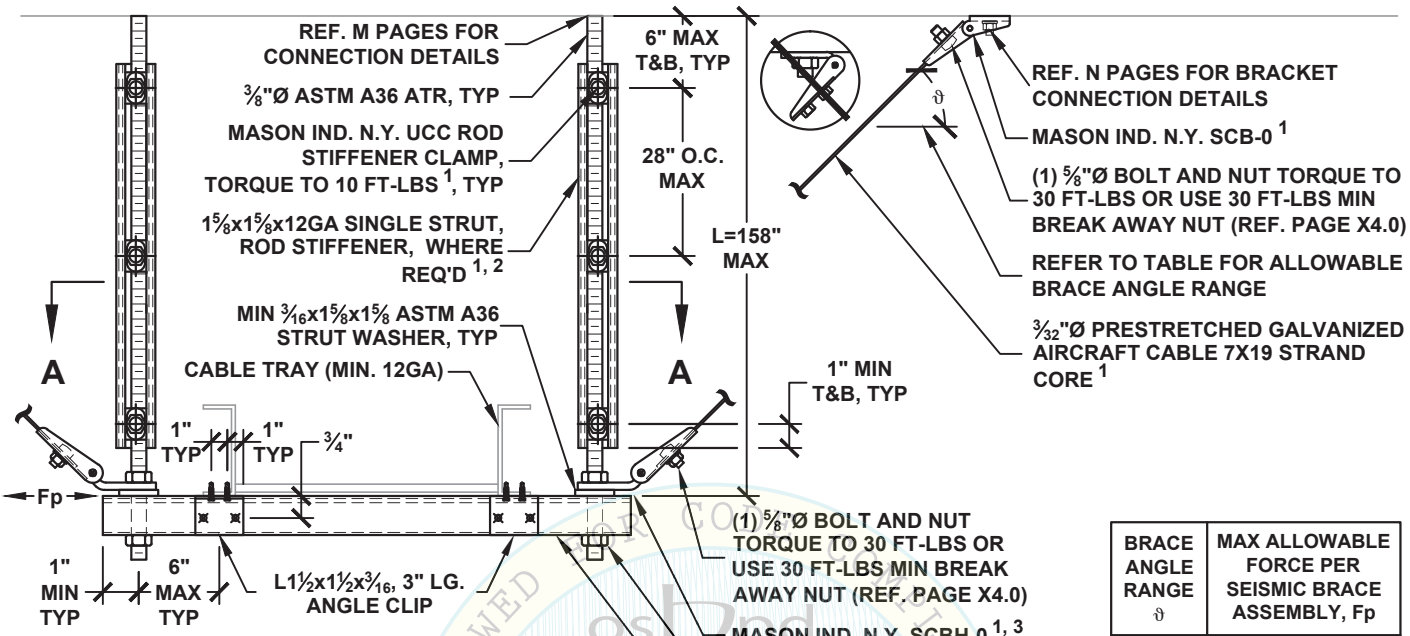

BRACE ANGLE RANGE ϑ	MAX ALLOWABLE FORCE PER SEISMIC BRACE ASSEMBLY, Fp
30° - 45°	270 LBS
46° - 60°	190 LBS

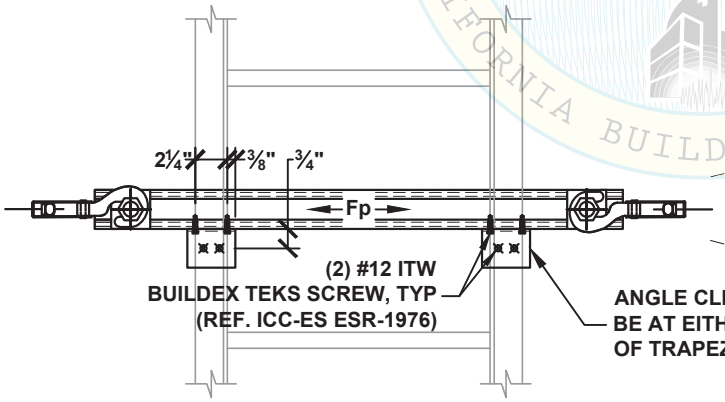

VIEW A-A

NOTES:

1. REF. SECTION A20 FOR GENERAL NOTES.
2. PROVIDE ROD STIFFENING ONLY WHERE SEISMIC BRACKETS ARE ATTACHED TO THE ROD AND ROD LENGTH (L) EXCEEDS 18". REF. APPROPRIATE M10 PAGES FOR DETAIL.
3. REF. PAGE A25.0 FOR ALTERNATE ARRANGEMENTS OF SEISMIC BRACES.
4. TO INCREASE ANGLE UP TO 15°, REF. PAGE A24.1.

REVIEWED FOR CODE COMPLIANCE CALIFORNIA BUILDING CODE, 2013
OPM-0043-13
BY: Jeffrey Y. Kikumoto
DATE: 06/23/2016

MASON WEST, INC.
1601 E. Miraloma Ave. Placentia, CA 92870
TEL (714) 630 - 0701, www.masonwest.com

Jiefu "Jeff" Zhang, SE
California SE No. S5270

PAGE
E2.10

HANGER ROD DIAMETER = 3/8"	CABLE TRAY LONGITUDINAL TRAPEZE SEISMIC CABLE BRACING SYSTEM 20 PLF MAX	KIT OPTIONS TC0L

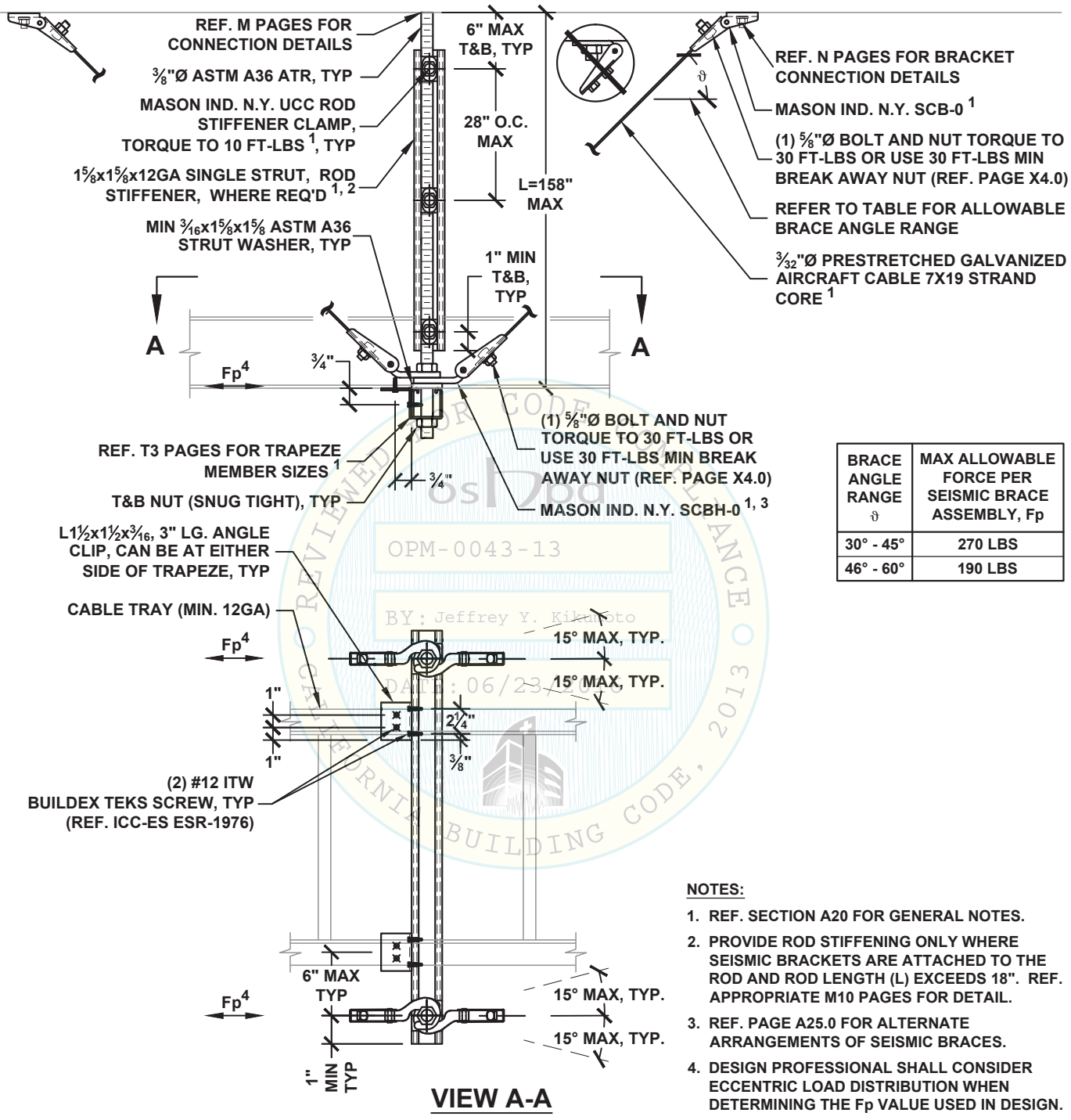

VIEW A-A

BRACE ANGLE RANGE ϑ	MAX ALLOWABLE FORCE PER SEISMIC BRACE ASSEMBLY, Fp
30° - 45°	270 LBS
46° - 60°	190 LBS

OSHPD
OPM-0043-13
BY: Jeffrey Y. Kikumoto
DATE: 06/23/2016
REVIEWED FOR CODE COMPLIANCE
CALIFORNIA BUILDING CODE, 2013

NOTES:

1. REF. SECTION A20 FOR GENERAL NOTES.
2. PROVIDE ROD STIFFENING ONLY WHERE SEISMIC BRACKETS ARE ATTACHED TO THE ROD AND ROD LENGTH (L) EXCEEDS 18". REF. APPROPRIATE M10 PAGES FOR DETAIL.
3. REF. PAGE A25.0 FOR ALTERNATE ARRANGEMENTS OF SEISMIC BRACES.
4. DESIGN PROFESSIONAL SHALL CONSIDER ECCENTRIC LOAD DISTRIBUTION WHEN DETERMINING THE Fp VALUE USED IN DESIGN.

MASON WEST, INC.
1601 E. Miraloma Ave. Placentia, CA 92870
TEL (714) 630 - 0701, www.masonwest.com

Jiefu "Jeff" Zhang, SE
California SE No. S5270

PAGE
E2.11

HANGER ROD DIAMETER = 3/8"	CABLE TRAY ALL-DIRECTIONAL TRAPEZE SEISMIC CABLE BRACING SYSTEM 20 PLF MAX	KIT OPTIONS TC0A

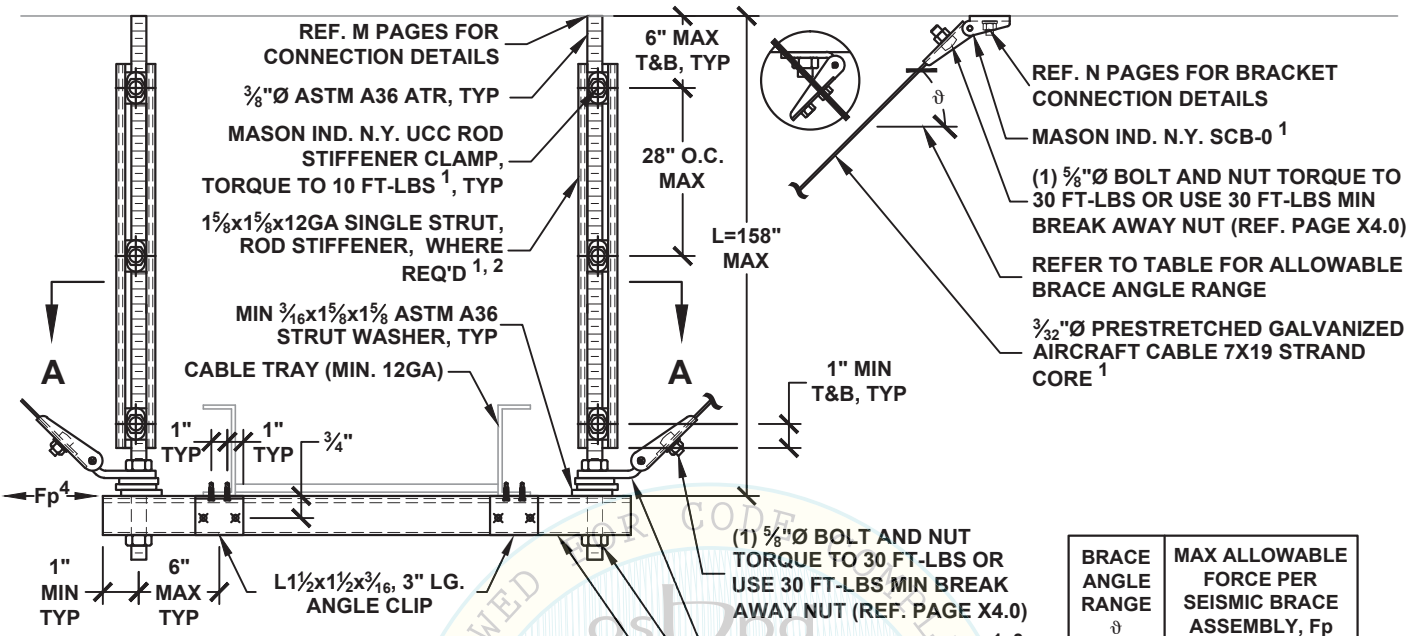

BRACE ANGLE RANGE ϑ	MAX ALLOWABLE FORCE PER SEISMIC BRACE ASSEMBLY, Fp
30° - 45°	270 LBS
46° - 60°	170 LBS

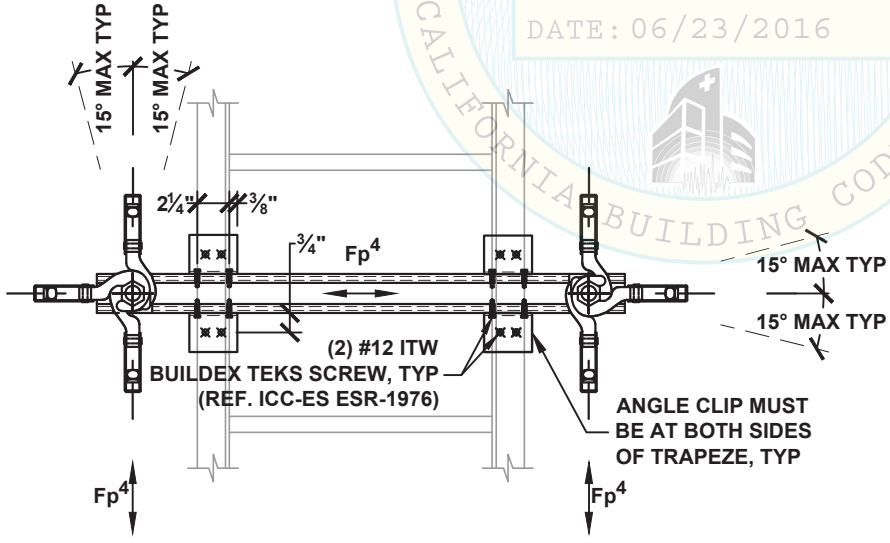

VIEW A-A

NOTES:

1. REF. SECTION A20 FOR GENERAL NOTES.
2. PROVIDE ROD STIFFENERS ONLY WHERE SEISMIC BRACKETS ARE ATTACHED TO THE ROD AND ROD LENGTH (L) EXCEEDS 18". REF. APPROPRIATE M10 PAGES FOR DETAIL.
3. REF. PAGE A25.0 FOR ALTERNATIVE ARRANGEMENTS OF SEISMIC BRACES.
4. DESIGN PROFESSIONAL SHALL CONSIDER ECCENTRIC LOAD DISTRIBUTION WHEN DETERMINING THE Fp VALUE USED IN DESIGN.

REVIEWED FOR CODE COMPLIANCE
CALIFORNIA BUILDING CODE, 2013
OSHPD
OPM-0043-13
BY: Jeffrey Y. Kikumoto
DATE: 06/23/2016

MASON WEST, INC.
1601 E. Miraloma Ave. Placentia, CA 92870
TEL (714) 630 - 0701, www.masonwest.com

Jiefu "Jeff" Zhang, SE
California SE No. S5270

PAGE
E2.12

HANGER ROD DIAMETER = ½"	CABLE TRAY TRANSVERSE TRAPEZE SEISMIC CABLE BRACING SYSTEM 45 PLF MAX	KIT OPTIONS TC1T

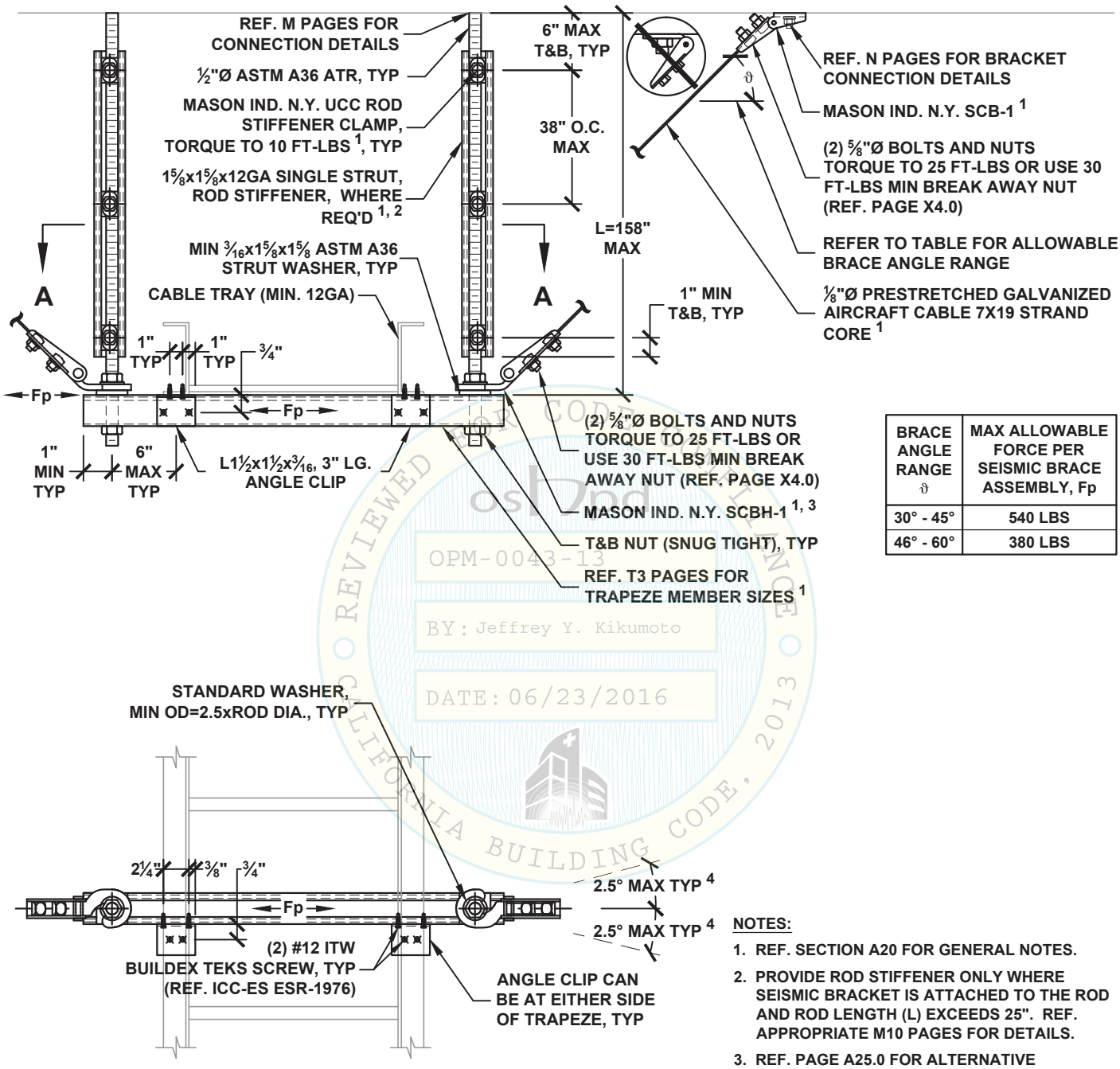

BRACE ANGLE RANGE ϑ	MAX ALLOWABLE FORCE PER SEISMIC BRACE ASSEMBLY, Fp
30° - 45°	540 LBS
46° - 60°	380 LBS

VIEW A-A

NOTES:

1. REF. SECTION A20 FOR GENERAL NOTES.
2. PROVIDE ROD STIFFENER ONLY WHERE SEISMIC BRACKET IS ATTACHED TO THE ROD AND ROD LENGTH (L) EXCEEDS 25". REF. APPROPRIATE M10 PAGES FOR DETAILS.
3. REF. PAGE A25.0 FOR ALTERNATIVE ARRANGEMENTS OF SEISMIC BRACES.
4. TO INCREASE ANGLE UP TO 15°, REF. PAGE A24.1.

OSHPD REVIEWED FOR CODE COMPLIANCE 2013 CALIFORNIA BUILDING CODE
OPM-0043-13
BY: Jeffrey Y. Kikumoto
DATE: 06/23/2016

MASON WEST, INC.
1601 E. Miraloma Ave. Placentia, CA 92870
TEL (714) 630 - 0701, www.masonwest.com

Jiefu "Jeff" Zhang, SE
California SE No. S5270

PAGE
E2.20

HANGER ROD DIAMETER = ½"	CABLE TRAY LONGITUDINAL TRAPEZE SEISMIC CABLE BRACING SYSTEM 45 PLF MAX	KIT OPTIONS TC1L

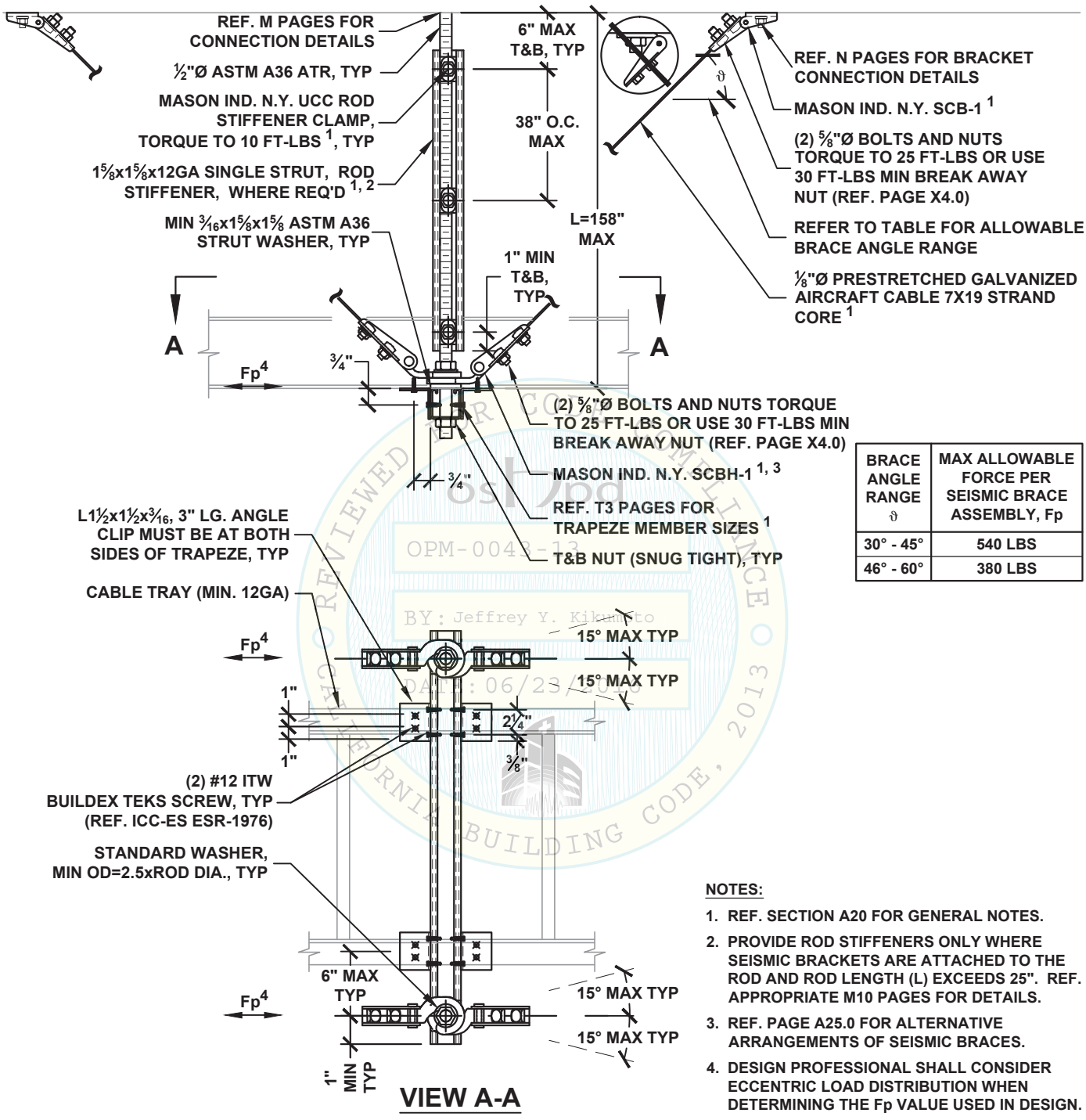

BRACE ANGLE RANGE ϑ	MAX ALLOWABLE FORCE PER SEISMIC BRACE ASSEMBLY, Fp
30° - 45°	540 LBS
46° - 60°	380 LBS

VIEW A-A

NOTES:

1. REF. SECTION A20 FOR GENERAL NOTES.
2. PROVIDE ROD STIFFENERS ONLY WHERE SEISMIC BRACKETS ARE ATTACHED TO THE ROD AND ROD LENGTH (L) EXCEEDS 25". REF. APPROPRIATE M10 PAGES FOR DETAILS.
3. REF. PAGE A25.0 FOR ALTERNATIVE ARRANGEMENTS OF SEISMIC BRACES.
4. DESIGN PROFESSIONAL SHALL CONSIDER ECCENTRIC LOAD DISTRIBUTION WHEN DETERMINING THE Fp VALUE USED IN DESIGN.

OSHPD PREAPPROVED OPM-0043-13 BY: Jeffrey Y. Kikumoto DATE: 06/23/2016 CALIFORNIA BUILDING CODE, 2013

MASON WEST, INC.
1601 E. Miraloma Ave. Placentia, CA 92870
TEL (714) 630 - 0701, www.masonwest.com

Jiefu "Jeff" Zhang, SE
California SE No. S5270

PAGE
E2.21

HANGER ROD DIAMETER = ½"	CABLE TRAY ALL-DIRECTIONAL TRAPEZE SEISMIC CABLE BRACING SYSTEM 45 PLF MAX	KIT OPTIONS TC1A

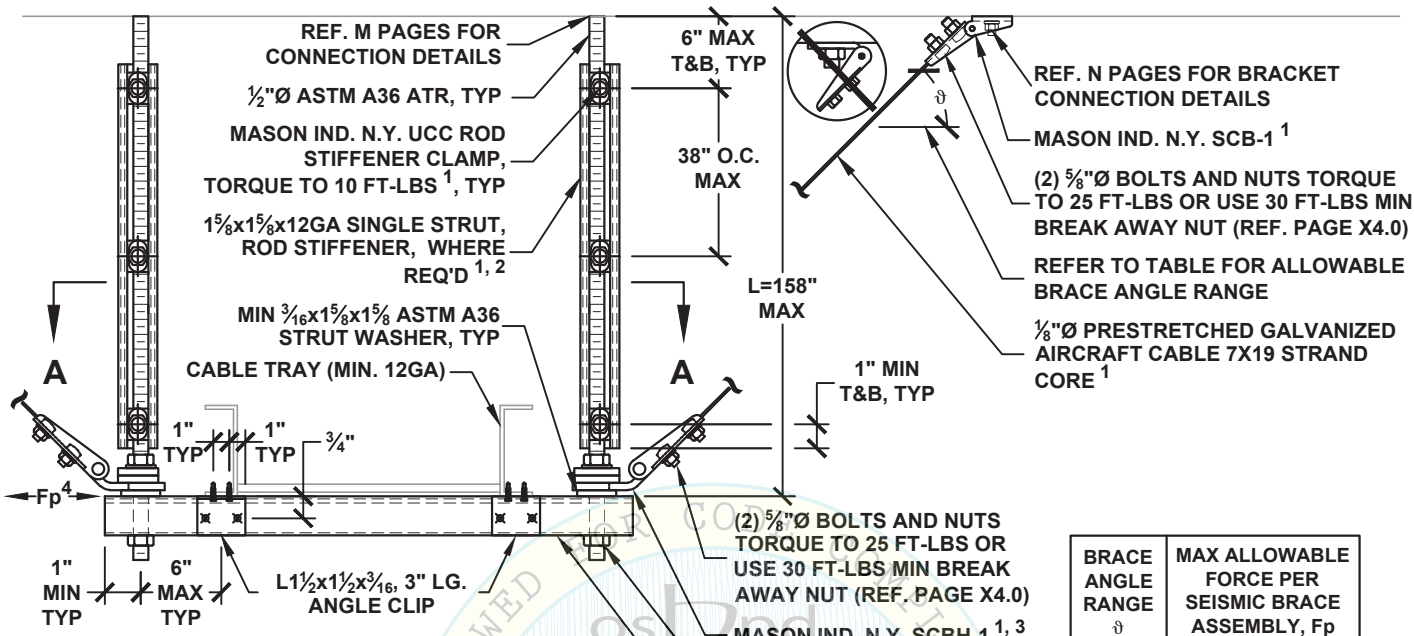

BRACE ANGLE RANGE ϑ	MAX ALLOWABLE FORCE PER SEISMIC BRACE ASSEMBLY, Fp
30° - 45°	500 LBS
46° - 60°	290 LBS

OSHPD
OPM-0043-13
BY: Jeffrey Y. Kikumoto
DATE: 06/23/2016
REVIEWED FOR CODE COMPLIANCE
CALIFORNIA BUILDING CODE, 2013

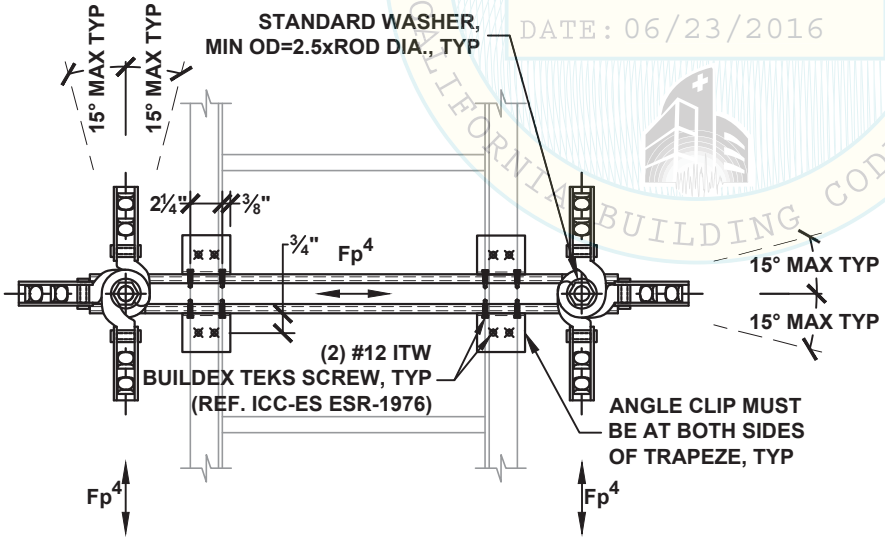

VIEW A-A

NOTES:

1. REF. SECTION A20 FOR GENERAL NOTES.
2. PROVIDE ROD STIFFENERS ONLY WHERE SEISMIC BRACKETS ARE ATTACHED TO THE ROD AND ROD LENGTH (L) EXCEEDS 25". REF. APPROPRIATE M10 PAGES FOR DETAILS.
3. REF. PAGE A25.0 FOR ALTERNATIVE ARRANGEMENTS OF SEISMIC BRACES.
4. DESIGN PROFESSIONAL SHALL CONSIDER ECCENTRIC LOAD DISTRIBUTION WHEN DETERMINING THE Fp VALUE USED IN DESIGN.

MASON WEST, INC.
1601 E. Miraloma Ave. Placentia, CA 92870
TEL (714) 630 - 0701, www.masonwest.com

Jiefu "Jeff" Zhang, SE
California SE No. S5270

PAGE
E2.22

HANGER ROD DIAMETER = 5/8"	CABLE TRAY TRANSVERSE TRAPEZE SEISMIC CABLE BRACING SYSTEM 85 PLF MAX	KIT OPTIONS TC1T

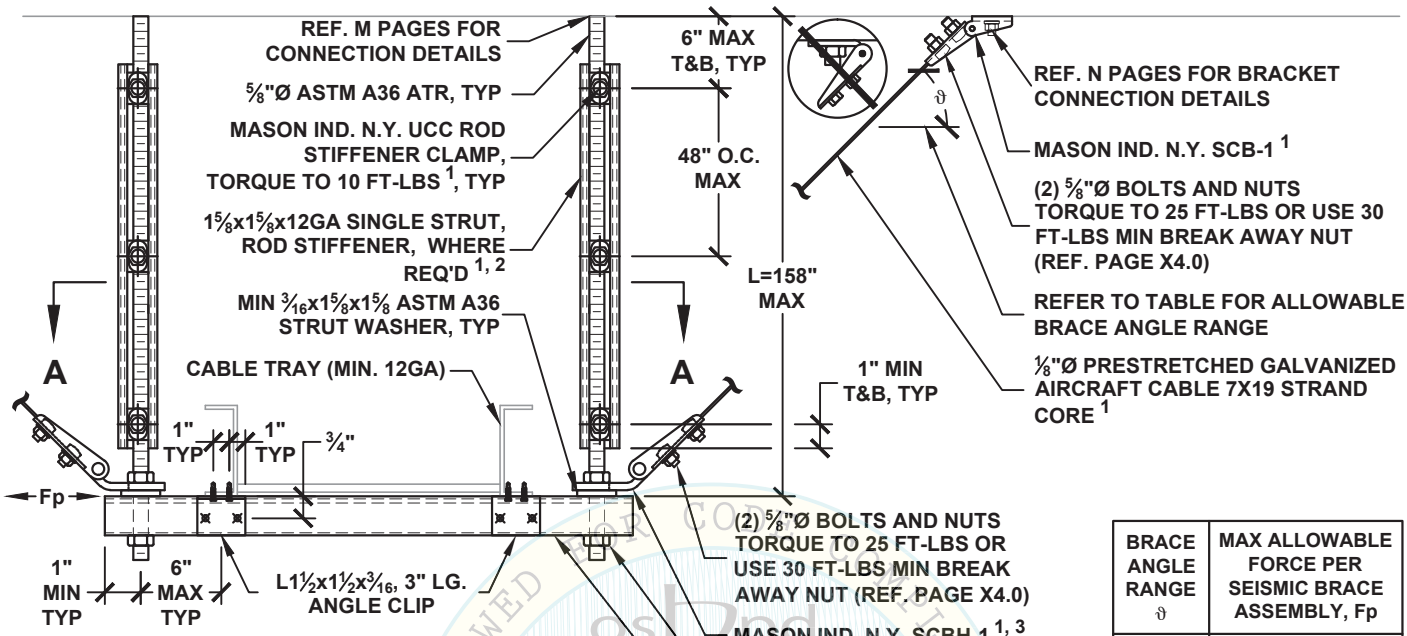

BRACE ANGLE RANGE ϑ	MAX ALLOWABLE FORCE PER SEISMIC BRACE ASSEMBLY, Fp
30° - 45°	540 LBS
46° - 60°	380 LBS

REVIEWED FOR CODE COMPLIANCE
OSHPD
OPM-0043-13
BY: Jeffrey Y. Kikumoto
DATE: 06/23/2016
CALIFORNIA BUILDING CODE, 2013

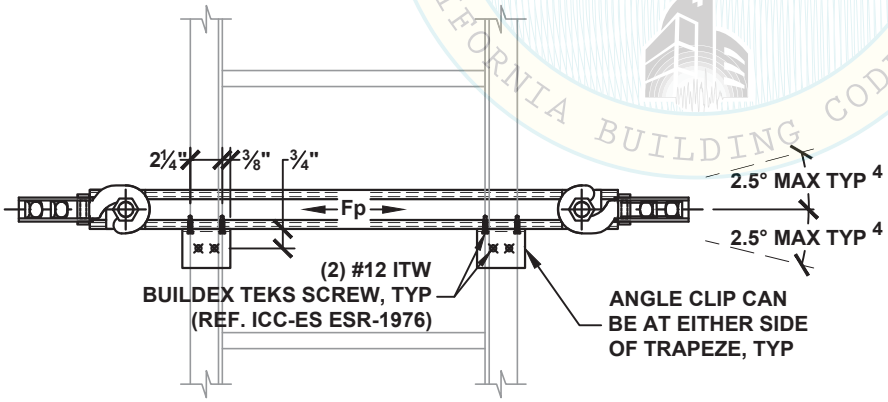

VIEW A-A

NOTES:

1. REF. SECTION A20 FOR GENERAL NOTES.
2. PROVIDE ROD STIFFENER ONLY WHERE SEISMIC BRACKET IS ATTACHED TO THE ROD AND ROD LENGTH (L) EXCEEDS 31". REF. APPROPRIATE M10 PAGES FOR DETAILS.
3. REF. PAGE A25.0 FOR ALTERNATIVE ARRANGEMENTS OF SEISMIC BRACES.
4. TO INCREASE ANGLE UP TO 15°, REF. PAGE A24.1.

MASON WEST, INC.
1601 E. Miraloma Ave. Placentia, CA 92870
TEL (714) 630 - 0701, www.masonwest.com

Jiefu "Jeff" Zhang, SE
California SE No. S5270

PAGE
E2.30

HANGER ROD DIAMETER = 5/8"	CABLE TRAY LONGITUDINAL TRAPEZE SEISMIC CABLE BRACING SYSTEM 85 PLF MAX	KIT OPTIONS TC1L

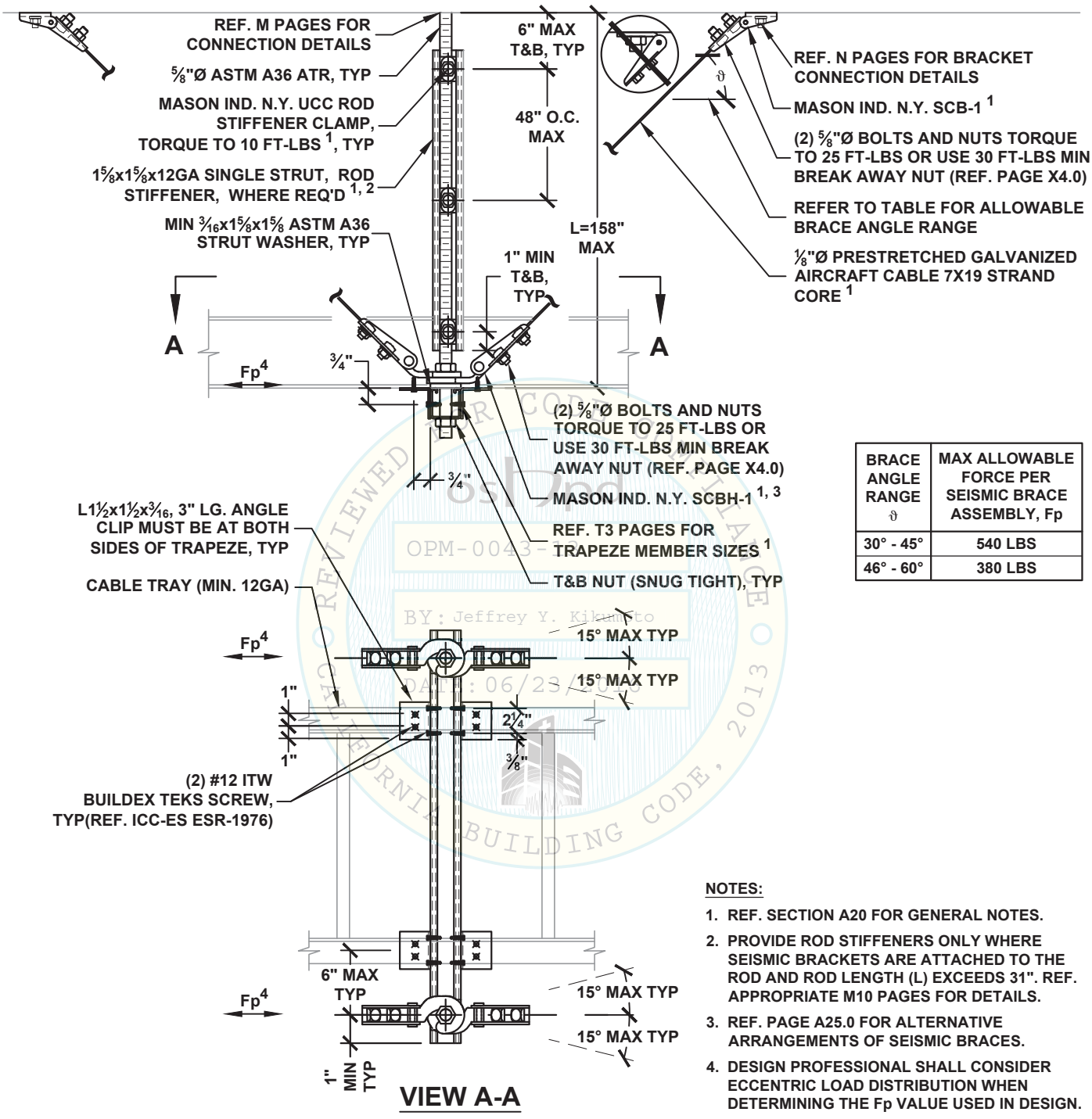

VIEW A-A

BRACE ANGLE RANGE ϑ	MAX ALLOWABLE FORCE PER SEISMIC BRACE ASSEMBLY, Fp
30° - 45°	540 LBS
46° - 60°	380 LBS

NOTES:

1. REF. SECTION A20 FOR GENERAL NOTES.
2. PROVIDE ROD STIFFENERS ONLY WHERE SEISMIC BRACKETS ARE ATTACHED TO THE ROD AND ROD LENGTH (L) EXCEEDS 31". REF. APPROPRIATE M10 PAGES FOR DETAILS.
3. REF. PAGE A25.0 FOR ALTERNATIVE ARRANGEMENTS OF SEISMIC BRACES.
4. DESIGN PROFESSIONAL SHALL CONSIDER ECCENTRIC LOAD DISTRIBUTION WHEN DETERMINING THE Fp VALUE USED IN DESIGN.

REVIEWED FOR CODE COMPLIANCE
OPM-0043-13
BY: Jeffrey Y. Kikumoto
DATE: 06/23/2016
CALIFORNIA BUILDING CODE, 2013

MASON WEST, INC.
1601 E. Miraloma Ave. Placentia, CA 92870
TEL (714) 630 - 0701, www.masonwest.com

Jiefu "Jeff" Zhang, SE
California SE No. S5270

PAGE
E2.31

HANGER ROD DIAMETER = 5/8"	CABLE TRAY ALL-DIRECTIONAL TRAPEZE SEISMIC CABLE BRACING SYSTEM 85 PLF MAX	KIT OPTIONS TC1A

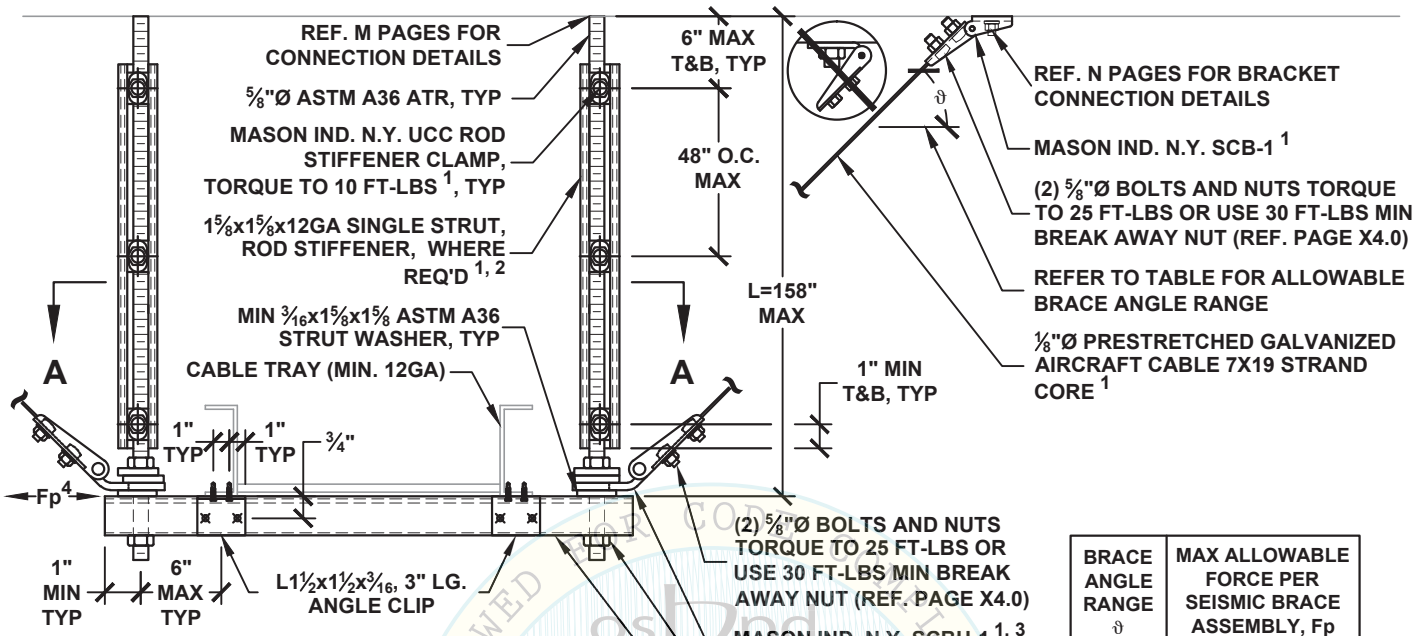

BRACE ANGLE RANGE ϑ	MAX ALLOWABLE FORCE PER SEISMIC BRACE ASSEMBLY, Fp
30° - 45°	540 LBS
46° - 60°	380 LBS

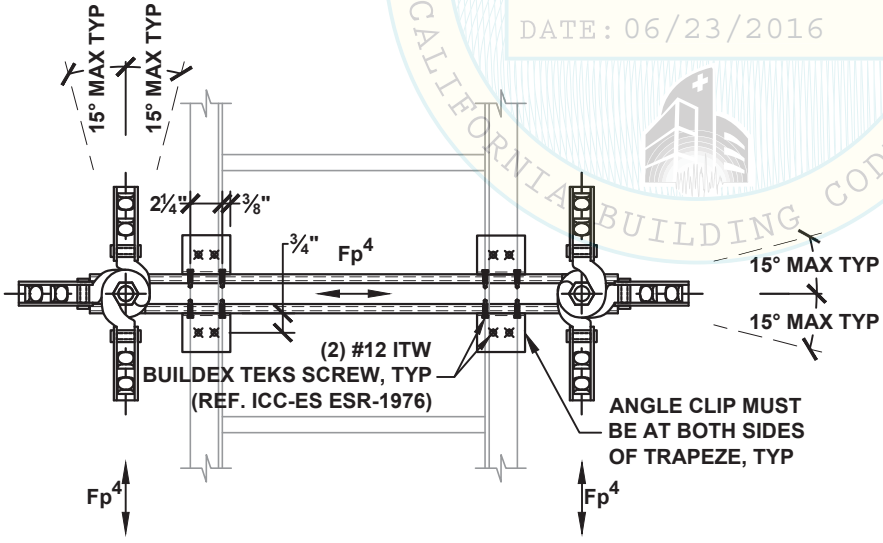

VIEW A-A

NOTES:

1. REF. SECTION A20 FOR GENERAL NOTES.
2. PROVIDE ROD STIFFENERS ONLY WHERE SEISMIC BRACKETS ARE ATTACHED TO THE ROD AND ROD LENGTH (L) EXCEEDS 31". REF. APPROPRIATE M10 PAGES FOR DETAILS
3. REF. PAGE A25.0 FOR ALTERNATIVE ARRANGEMENTS OF SEISMIC BRACES.
4. DESIGN PROFESSIONAL SHALL CONSIDER ECCENTRIC LOAD DISTRIBUTION WHEN DETERMINING THE Fp VALUE USED IN DESIGN.

REVIEWED FOR CODE COMPLIANCE CALIFORNIA BUILDING CODE, 2013
OPM-0043-13
BY: Jeffrey Y. Kikumoto
DATE: 06/23/2016

MASON WEST, INC.
1601 E. Miraloma Ave. Placentia, CA 92870
TEL (714) 630 - 0701, www.masonwest.com

Jiefu "Jeff" Zhang, SE
California SE No. S5270

PAGE
E2.32

HANGER ROD DIAMETER = ⅜"	CABLE TRAY X-PATTERN TRAPEZE SEISMIC CABLE BRACING SYSTEM 20 PLF MAX	KIT OPTIONS **TC0X**

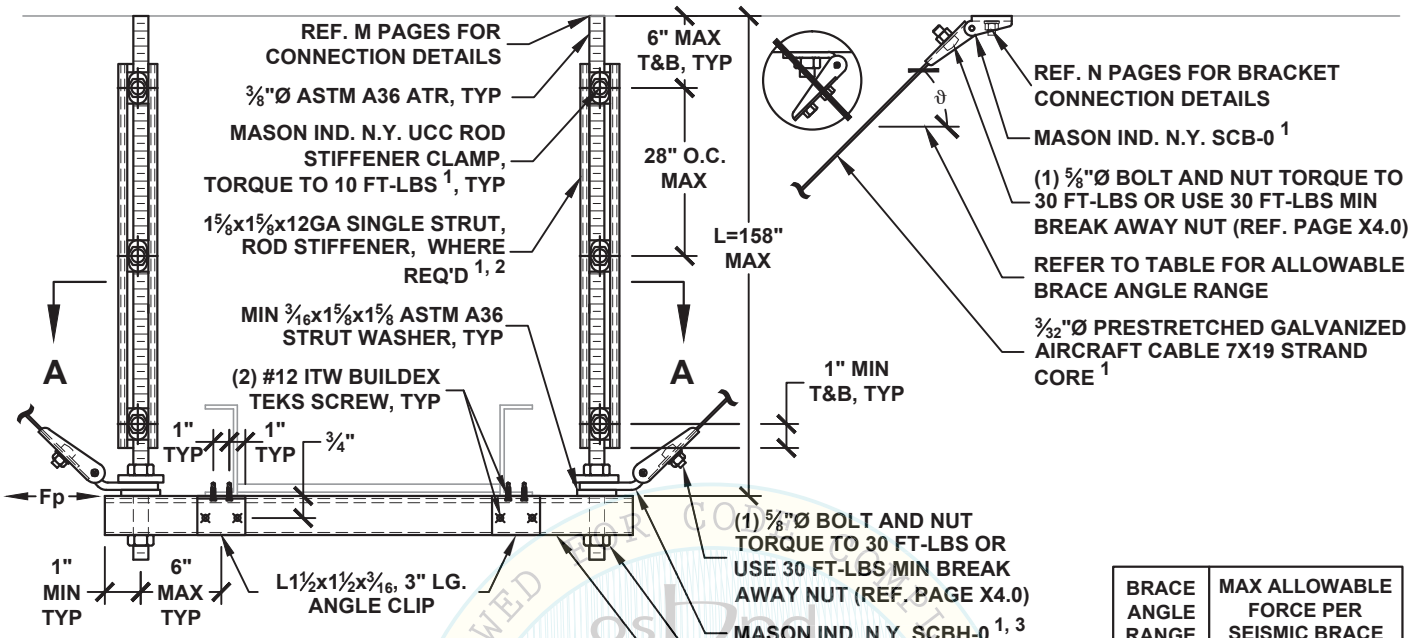

BRACE ANGLE RANGE ϑ	MAX ALLOWABLE FORCE PER SEISMIC BRACE ASSEMBLY, Fp
30° - 45°	270 LBS
46° - 60°	190 LBS

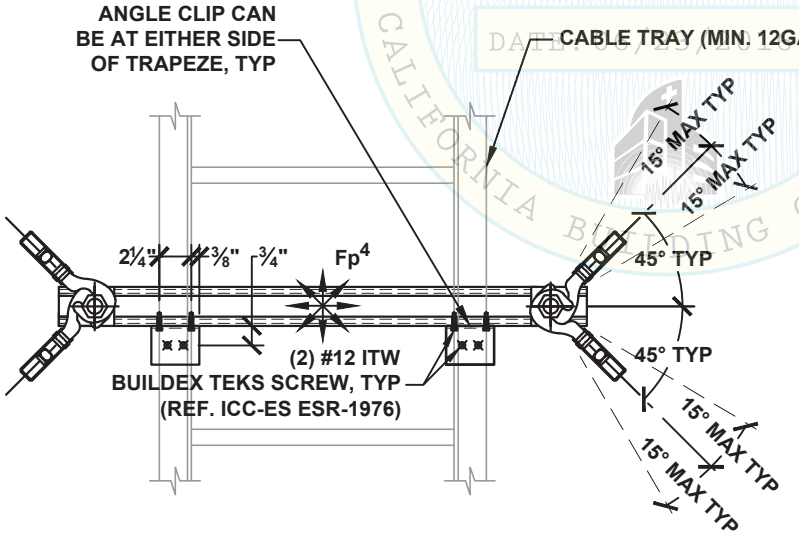

VIEW A-A

NOTES:

1. REF. SECTION A20 FOR GENERAL NOTES.
2. PROVIDE ROD STIFFENING ONLY WHERE SEISMIC BRACKETS ARE ATTACHED TO THE ROD AND ROD LENGTH (L) EXCEEDS 18". REF. APPROPRIATE M10 PAGES FOR DETAIL.
3. REF. PAGE A25.0 FOR ALTERNATE ARRANGEMENTS OF SEISMIC BRACES.
4. Fp SHALL BE A SINGLE LOAD APPLIED IN ANY HORIZONTAL DIRECTION. MULTIPLE ARROWS DO NOT SIGNIFY SIMULTANEOUS Fp LOADS ACTING AT ONE TIME. DESIGN PROFESSIONAL SHALL CONSIDER ECCENTRIC LOAD DISTRIBUTION WHEN DETERMINING THE Fp VALUE USED IN DESIGN.

REVIEWED FOR CODE COMPLIANCE
OSHPD
OPM-0043-13
BY: Jeffrey Y. Kikumoto
DATE: 6/23/2016
CALIFORNIA BUILDING CODE, 2013

MASON WEST, INC.
1601 E. Miraloma Ave. Placentia, CA 92870
TEL (714) 630 - 0701, www.masonwest.com

Jiefu "Jeff" Zhang, SE
California SE No. S5270

PAGE
E3.10

HANGER ROD DIAMETER = ½"	CABLE TRAY X-PATTERN TRAPEZE SEISMIC CABLE BRACING SYSTEM 45 PLF MAX	KIT OPTIONS TC1X

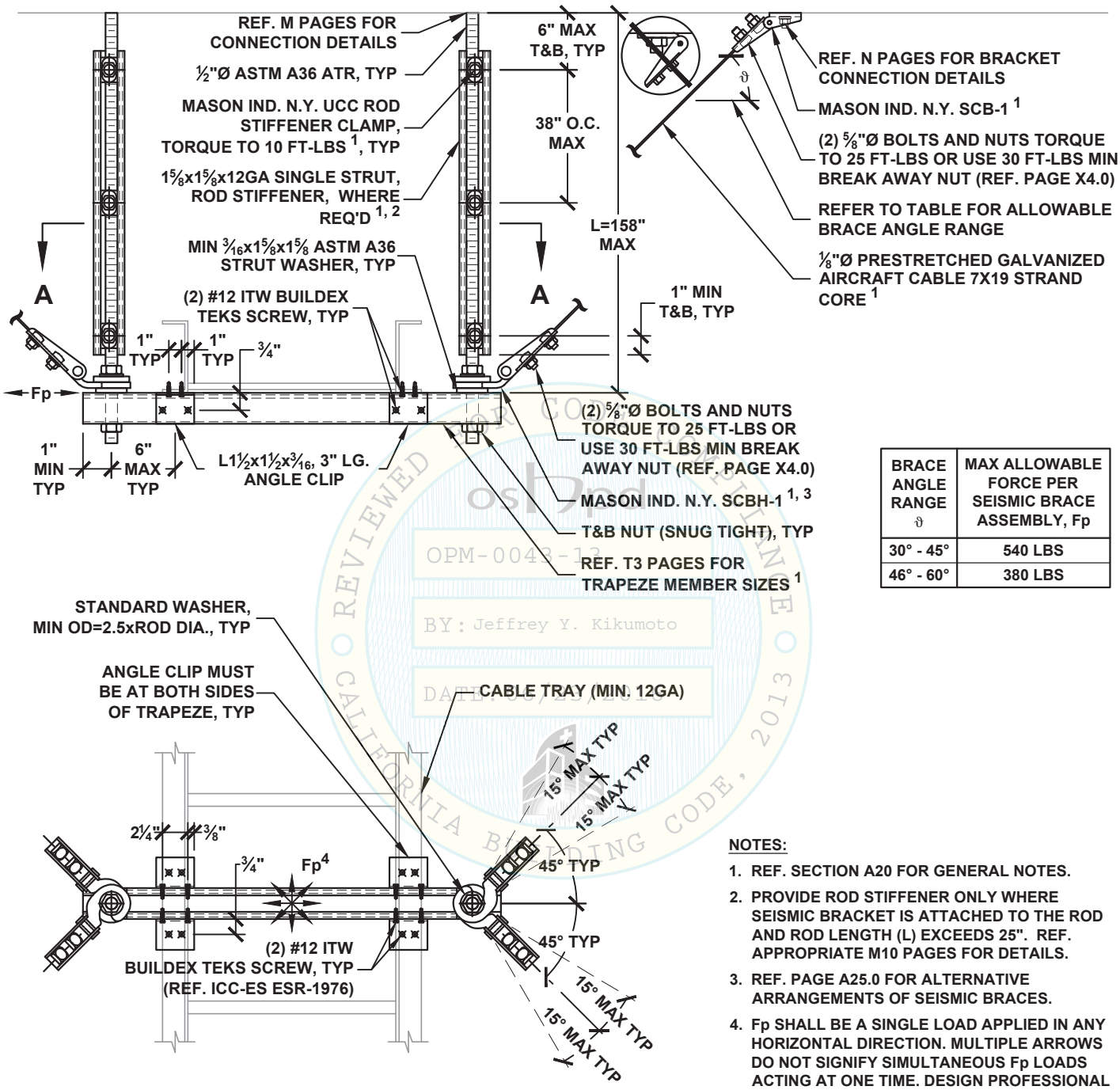

VIEW A-A

BRACE ANGLE RANGE ϑ	MAX ALLOWABLE FORCE PER SEISMIC BRACE ASSEMBLY, Fp
30° - 45°	540 LBS
46° - 60°	380 LBS

NOTES:

1. REF. SECTION A20 FOR GENERAL NOTES.
2. PROVIDE ROD STIFFENER ONLY WHERE SEISMIC BRACKET IS ATTACHED TO THE ROD AND ROD LENGTH (L) EXCEEDS 25". REF. APPROPRIATE M10 PAGES FOR DETAILS.
3. REF. PAGE A25.0 FOR ALTERNATIVE ARRANGEMENTS OF SEISMIC BRACES.
4. Fp SHALL BE A SINGLE LOAD APPLIED IN ANY HORIZONTAL DIRECTION. MULTIPLE ARROWS DO NOT SIGNIFY SIMULTANEOUS Fp LOADS ACTING AT ONE TIME. DESIGN PROFESSIONAL SHALL CONSIDER ECCENTRIC LOAD DISTRIBUTION WHEN DETERMINING THE Fp VALUE USED IN DESIGN.

REVIEWED FOR CODE COMPLIANCE CALIFORNIA BUILDING CODE, 2013
OPM-0043-13
BY: Jeffrey Y. Kikumoto
DATE: 06/23/2016

MASON WEST, INC.
1601 E. Miraloma Ave. Placentia, CA 92870
TEL (714) 630 - 0701, www.masonwest.com

Jiefu "Jeff" Zhang, SE
California SE No. S5270

PAGE
E3.11

HANGER ROD DIAMETER = 5/8"	CABLE TRAY X-PATTERN TRAPEZE SEISMIC CABLE BRACING SYSTEM 85 PLF MAX	KIT OPTIONS TC1X

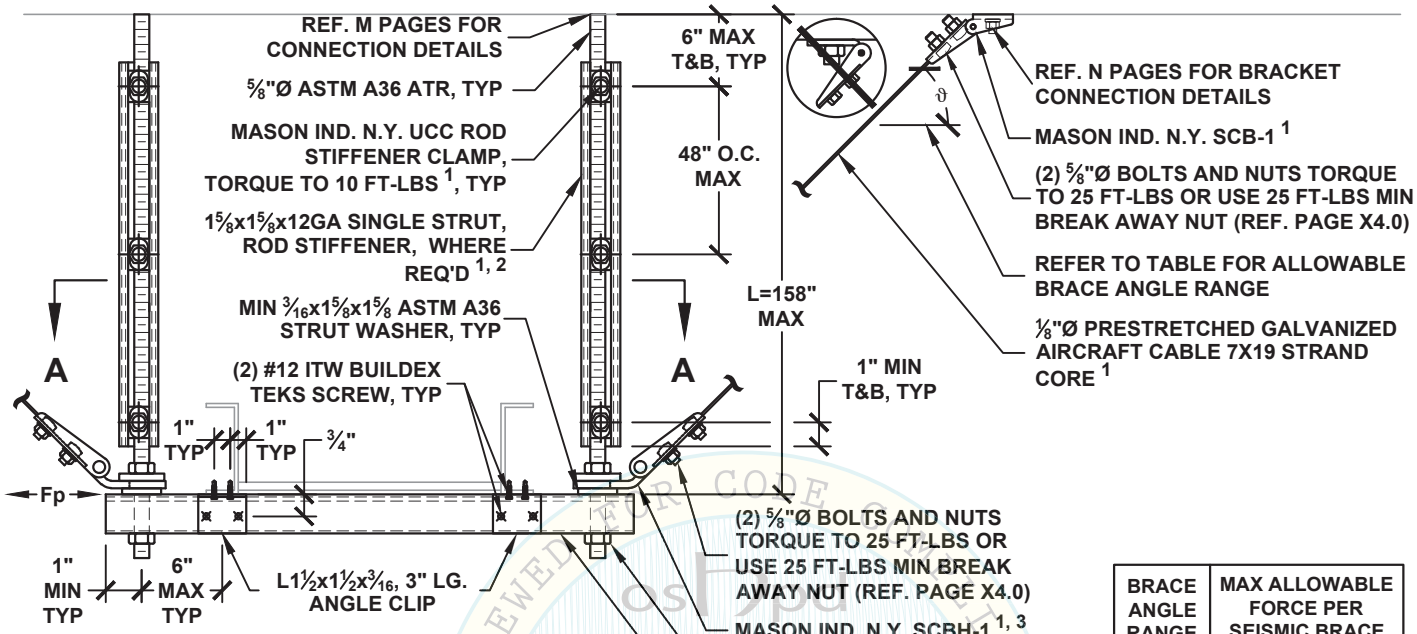

BRACE ANGLE RANGE ϑ	MAX ALLOWABLE FORCE PER SEISMIC BRACE ASSEMBLY, Fp
30° - 45°	540 LBS
46° - 60°	380 LBS

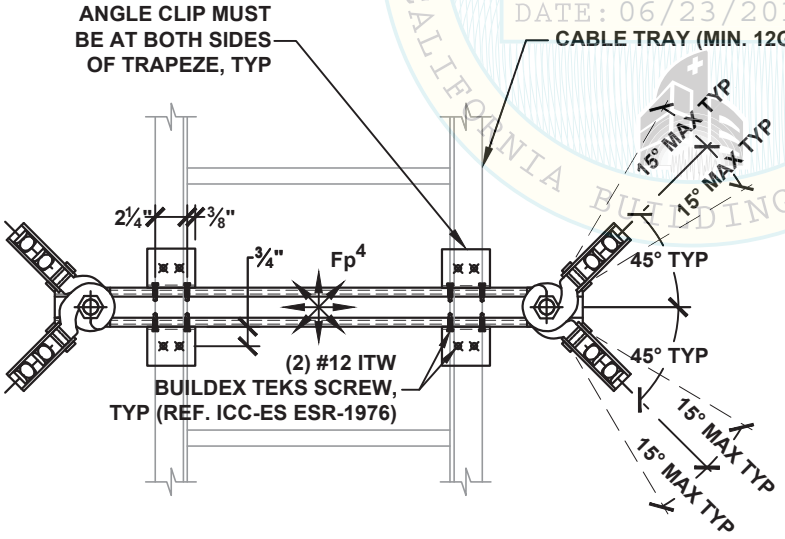

VIEW A-A

NOTES:

1. REF. SECTION A20 FOR GENERAL NOTES.
2. PROVIDE ROD STIFFENER ONLY WHERE SEISMIC BRACKET IS ATTACHED TO THE ROD AND ROD LENGTH (L) EXCEEDS 31". REF. APPROPRIATE M10 PAGES FOR DETAILS.
3. REF. PAGE A25.0 FOR ALTERNATIVE ARRANGEMENTS OF SEISMIC BRACES.
4. Fp SHALL BE A SINGLE LOAD APPLIED IN ANY HORIZONTAL DIRECTION. MULTIPLE ARROWS DO NOT SIGNIFY SIMULTANEOUS Fp LOADS ACTING AT ONE TIME. DESIGN PROFESSIONAL SHALL CONSIDER ECCENTRIC LOAD DISTRIBUTION WHEN DETERMINING THE Fp VALUE USED IN DESIGN.

REVIEWED FOR CODE COMPLIANCE
CALIFORNIA BUILDING CODE, 2013
OPM-0043-13
BY: Jeffrey Y. Kikumoto
DATE: 06/23/2016

MASON WEST, INC.
1601 E. Miraloma Ave. Placentia, CA 92870
TEL (714) 630 - 0701, www.masonwest.com

Jiefu "Jeff" Zhang, SE
California SE No. S5270

PAGE
E3.12

HANGER ROD DIAMETER = 3/8"	CABLE TRAY TRANSVERSE TRAPEZE SEISMIC SOLID BRACING SYSTEM 30 PLF MAX	KIT OPTIONS TW38T

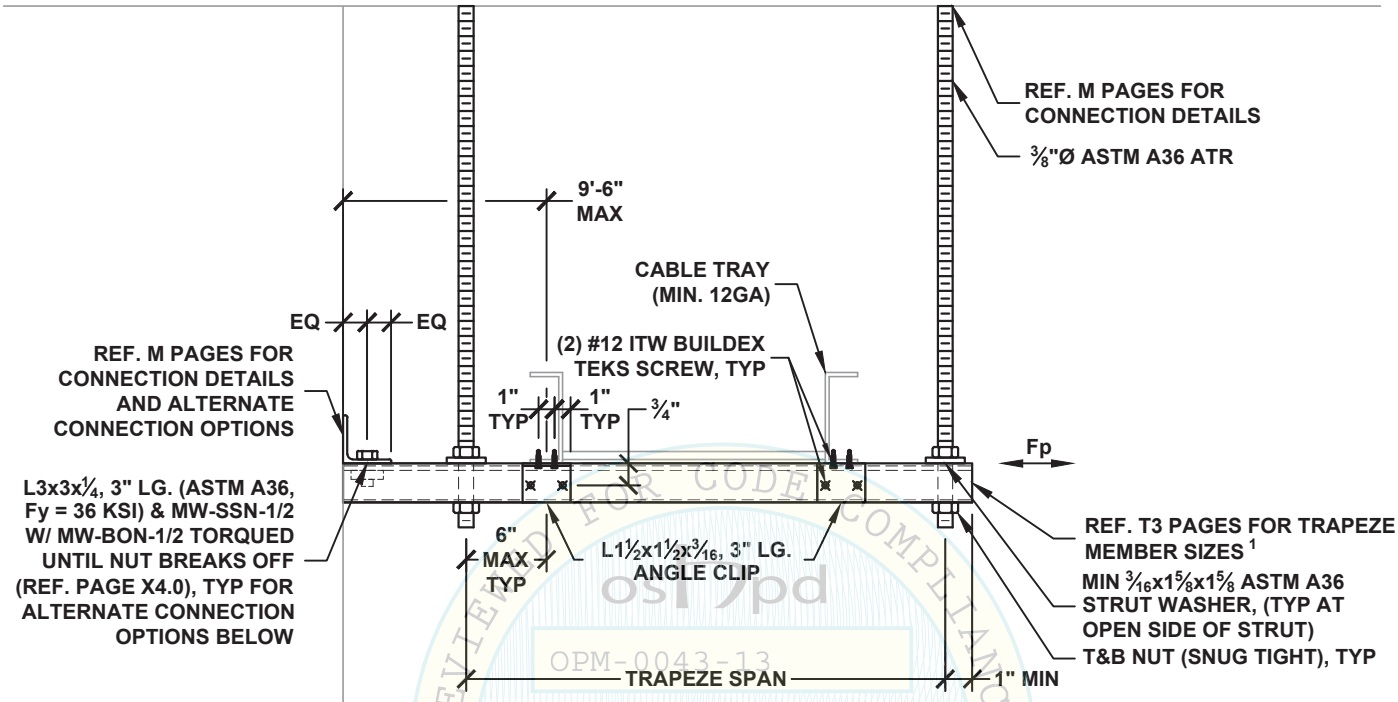

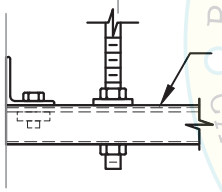

OPTION 1: SINGLE STRUT TRAPEZE

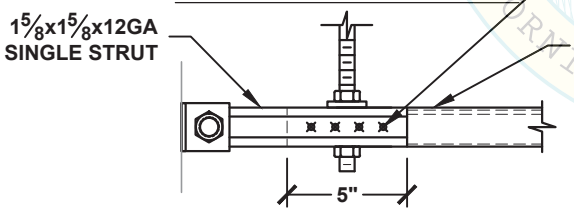

OPTION 2: SINGLE STRUT TRAPEZE

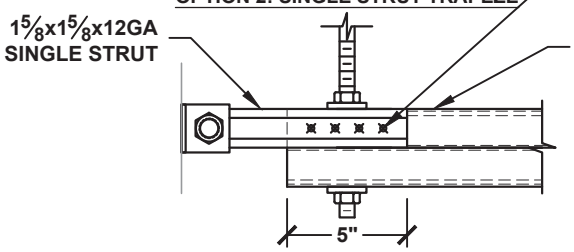

OPTION 3: DOUBLE STRUT TRAPEZE

MAX ALLOWABLE FORCE PER SEISMIC BRACE ASSEMBLY, Fp
670 LBS

NOTES:

1. TRAPEZE MEMBER MAY BE PROVIDED WITH ROUND HOLES SIZED FOR HANGER RODS. REF. X7.0 & X7.1 FOR STRUT MEMBER DATA.
2. SEPARATE LONGITUDINAL BRACING SHALL BE PROVIDED FOR THE CABLE TRAY RUN AS DISCUSSED IN SECTION A20.

OSP Jpd
OPM-0043-13
BY: Jeffrey Y. Kikumoto
DATE: 06/23/2016
REVIEWED FOR CODE COMPLIANCE
CALIFORNIA BUILDING CODE, 2013

MASON WEST, INC.
1601 E. Miraloma Ave. Placentia, CA 92870
TEL (714) 630 - 0701, www.masonwest.com

Jiefu "Jeff" Zhang, SE
California SE No. S5270

PAGE
E4.10

HANGER ROD DIAMETER = 3/8"	CABLE TRAY ALL-DIRECTIONAL TRAPEZE SEISMIC SOLID BRACING SYSTEM 20 PLF MAX	KIT OPTIONS TW38A

SHB OPTION

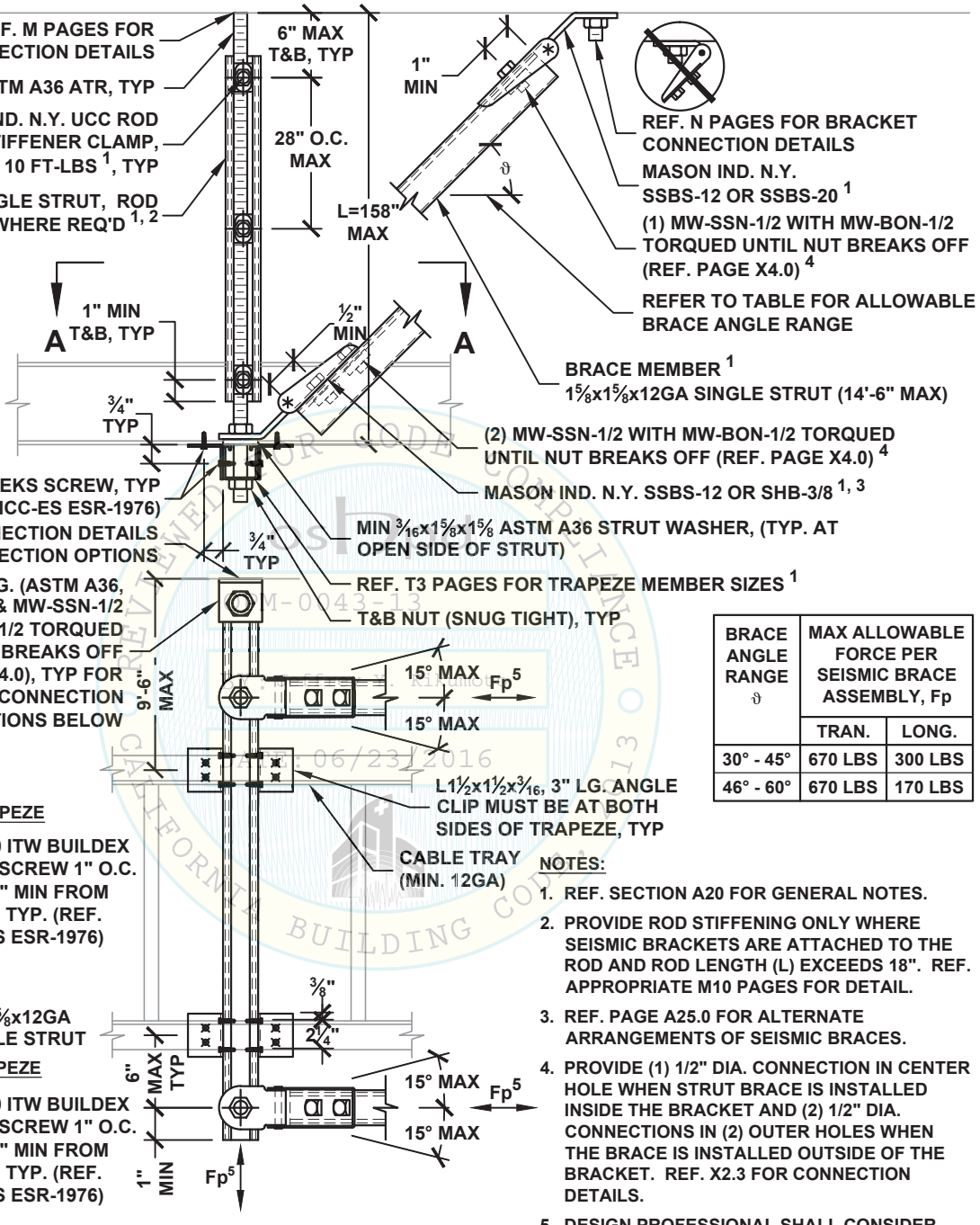

BRACE ANGLE RANGE ϑ	MAX ALLOWABLE FORCE PER SEISMIC BRACE ASSEMBLY, Fp	
	TRAN.	LONG.
30° - 45°	670 LBS	300 LBS
46° - 60°	670 LBS	170 LBS

NOTES:

1. REF. SECTION A20 FOR GENERAL NOTES.
2. PROVIDE ROD STIFFENING ONLY WHERE SEISMIC BRACKETS ARE ATTACHED TO THE ROD AND ROD LENGTH (L) EXCEEDS 18". REF. APPROPRIATE M10 PAGES FOR DETAIL.
3. REF. PAGE A25.0 FOR ALTERNATE ARRANGEMENTS OF SEISMIC BRACES.
4. PROVIDE (1) 1/2" DIA. CONNECTION IN CENTER HOLE WHEN STRUT BRACE IS INSTALLED INSIDE THE BRACKET AND (2) 1/2" DIA. CONNECTIONS IN (2) OUTER HOLES WHEN THE BRACE IS INSTALLED OUTSIDE OF THE BRACKET. REF. X2.3 FOR CONNECTION DETAILS.
5. DESIGN PROFESSIONAL SHALL CONSIDER ECCENTRIC LOAD DISTRIBUTION WHEN DETERMINING THE Fp VALUE USED IN DESIGN.

MASON WEST, INC.
1601 E. Miraloma Ave. Placentia, CA 92870
TEL (714) 630 - 0701, www.masonwest.com

Jiefu "Jeff" Zhang, SE
California SE No. S5270

PAGE **E4.12**

HANGER ROD DIAMETER = ½"	CABLE TRAY TRANSVERSE TRAPEZE SEISMIC SOLID BRACING SYSTEM 45 PLF MAX	KIT OPTIONS TW50T

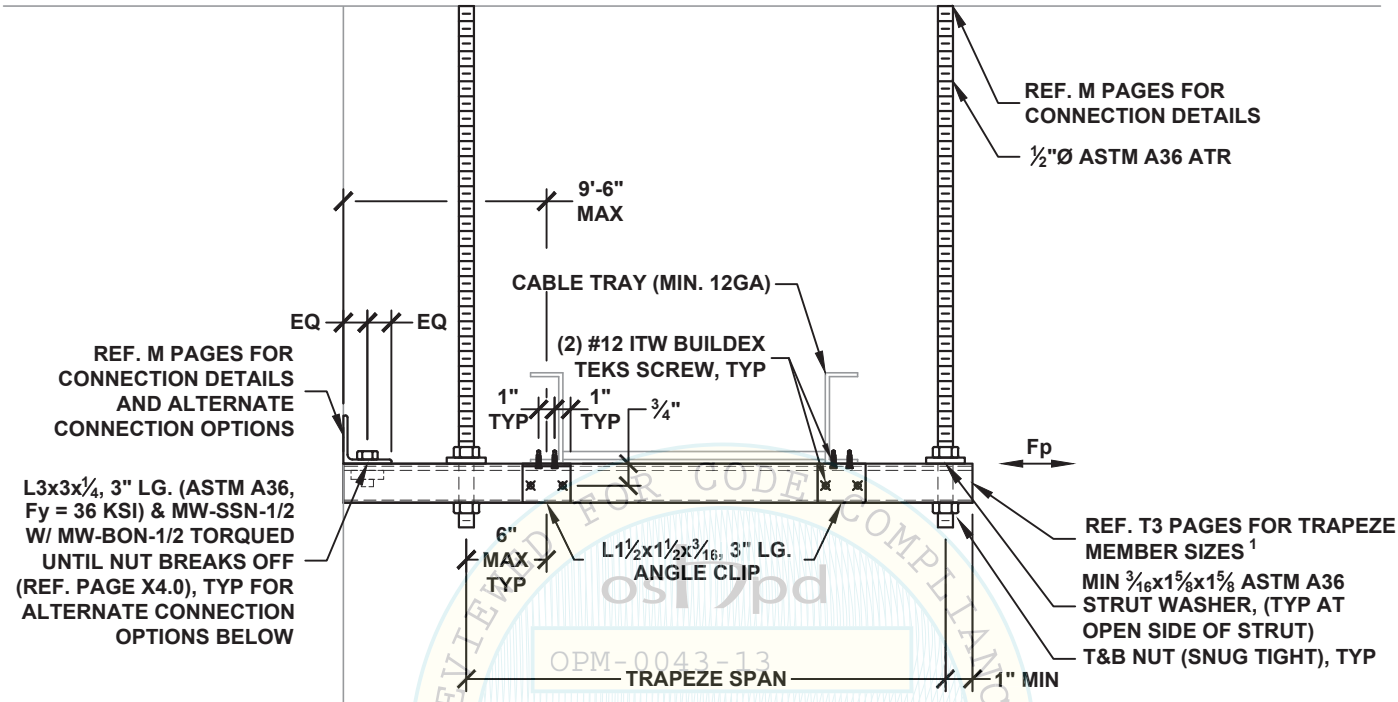

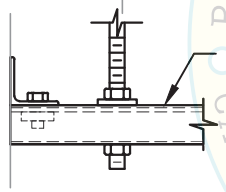

OPTION 1: SINGLE STRUT TRAPEZE

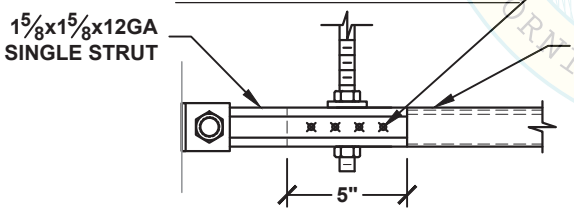

OPTION 2: SINGLE STRUT TRAPEZE

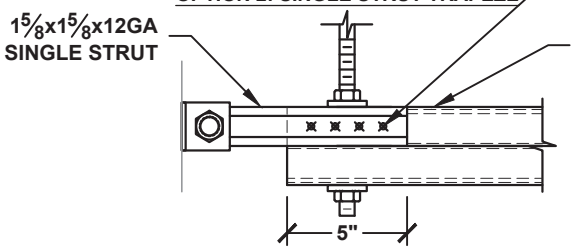

OPTION 3: DOUBLE STRUT TRAPEZE

MAX ALLOWABLE FORCE PER SEISMIC BRACE ASSEMBLY, Fp
670 LBS

NOTES:

1. TRAPEZE MEMBER MAY BE PROVIDED WITH ROUND HOLES SIZED FOR HANGER RODS. REF. X7.0 & X7.1 FOR STRUT MEMBER DATA.
2. SEPARATE LONGITUDINAL BRACING SHALL BE PROVIDED FOR THE CABLE TRAY RUN AS DISCUSSED IN SECTION A20.

OSTPOD
OPM-0043-13
BY: Jeffrey Y. Kikumoto
DATE: 06/23/2016
CALIFORNIA BUILDING CODE, 2013 - REVIEWED FOR CODE COMPLIANCE

MASON WEST, INC.
1601 E. Miraloma Ave. Placentia, CA 92870
TEL (714) 630 - 0701, www.masonwest.com

Jiefu "Jeff" Zhang, SE
California SE No. S5270

PAGE
E4.20

HANGER ROD DIAMETER = ½"	CABLE TRAY ALL-DIRECTIONAL TRAPEZE SEISMIC SOLID BRACING SYSTEM 45 PLF MAX	KIT OPTIONS TW50A

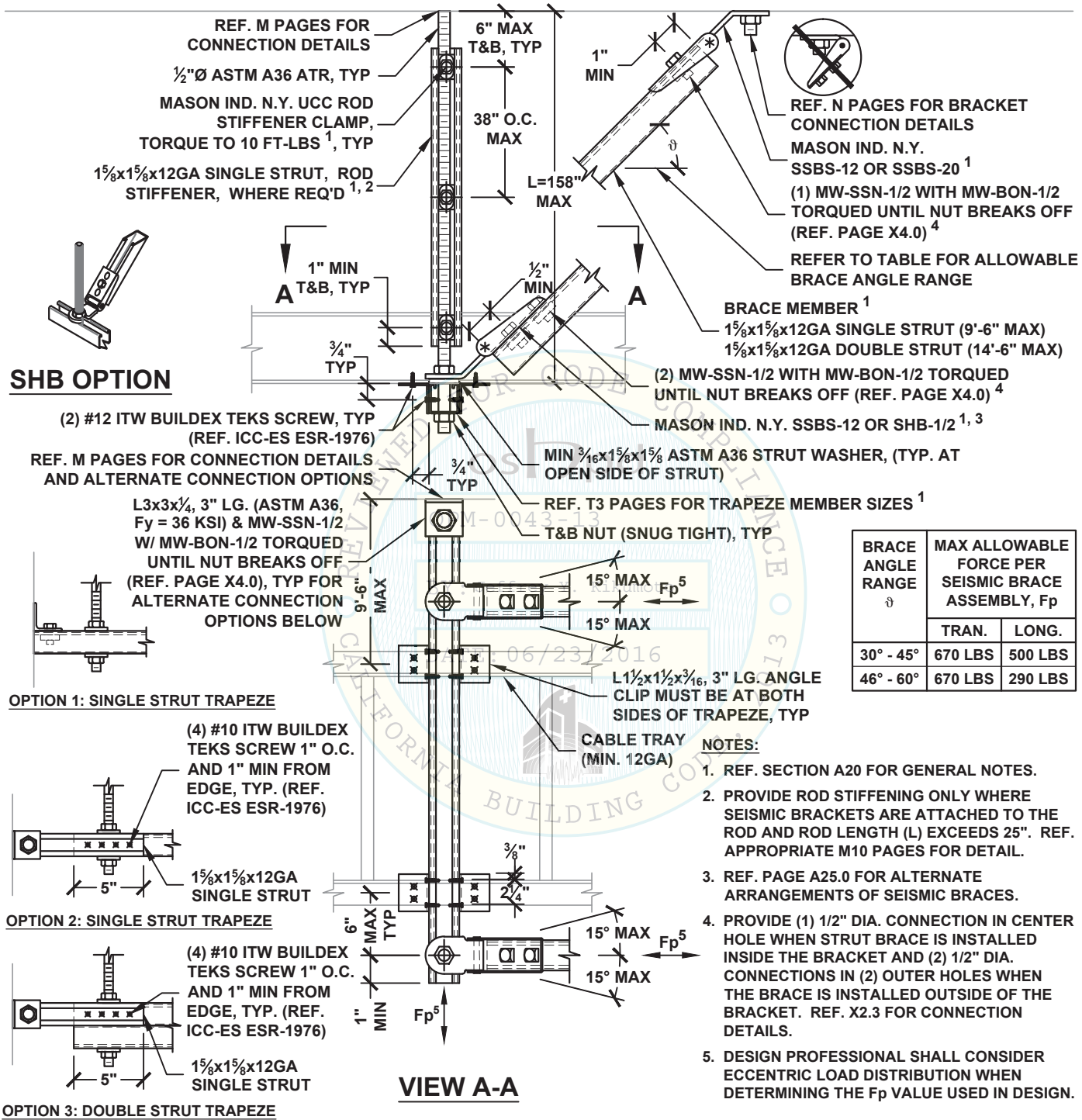

BRACE ANGLE RANGE ϑ	MAX ALLOWABLE FORCE PER SEISMIC BRACE ASSEMBLY, Fp	
	TRAN.	LONG.
30° - 45°	670 LBS	500 LBS
46° - 60°	670 LBS	290 LBS

NOTES:

1. REF. SECTION A20 FOR GENERAL NOTES.
2. PROVIDE ROD STIFFENING ONLY WHERE SEISMIC BRACKETS ARE ATTACHED TO THE ROD AND ROD LENGTH (L) EXCEEDS 25". REF. APPROPRIATE M10 PAGES FOR DETAIL.
3. REF. PAGE A25.0 FOR ALTERNATE ARRANGEMENTS OF SEISMIC BRACES.
4. PROVIDE (1) 1/2" DIA. CONNECTION IN CENTER HOLE WHEN STRUT BRACE IS INSTALLED INSIDE THE BRACKET AND (2) 1/2" DIA. CONNECTIONS IN (2) OUTER HOLES WHEN THE BRACE IS INSTALLED OUTSIDE OF THE BRACKET. REF. X2.3 FOR CONNECTION DETAILS.
5. DESIGN PROFESSIONAL SHALL CONSIDER ECCENTRIC LOAD DISTRIBUTION WHEN DETERMINING THE Fp VALUE USED IN DESIGN.

MASON WEST, INC.
1601 E. Miraloma Ave. Placentia, CA 92870
TEL (714) 630 - 0701, www.masonwest.com

Jiefu "Jeff" Zhang, SE
California SE No. S5270

PAGE
E4.22

HANGER ROD DIAMETER = 5/8"	CABLE TRAY TRANSVERSE TRAPEZE SEISMIC SOLID BRACING SYSTEM 85 PLF MAX	KIT OPTIONS TW63T

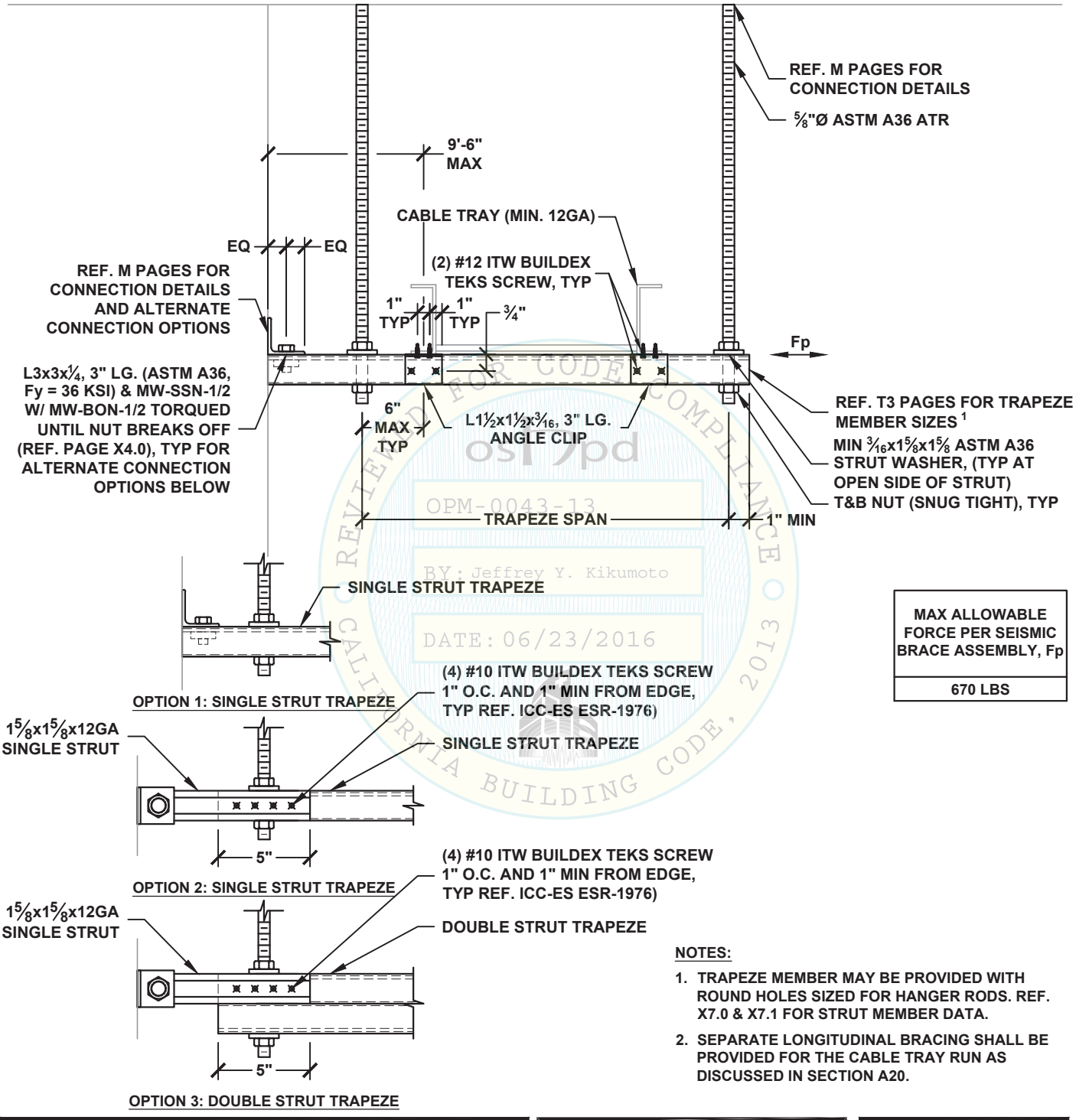

MAX ALLOWABLE FORCE PER SEISMIC BRACE ASSEMBLY, Fp
670 LBS

NOTES:

1. TRAPEZE MEMBER MAY BE PROVIDED WITH ROUND HOLES SIZED FOR HANGER RODS. REF. X7.0 & X7.1 FOR STRUT MEMBER DATA.
2. SEPARATE LONGITUDINAL BRACING SHALL BE PROVIDED FOR THE CABLE TRAY RUN AS DISCUSSED IN SECTION A20.

OSHPD
OPM-0043-13
BY: Jeffrey Y. Kikumoto
DATE: 06/23/2016
CALIFORNIA BUILDING CODE, 2013 - REVIEWED FOR CODE COMPLIANCE

MASON WEST, INC.
1601 E. Miraloma Ave. Placentia, CA 92870
TEL (714) 630 - 0701, www.masonwest.com

Jiefu "Jeff" Zhang, SE
California SE No. S5270

PAGE
E4.30

HANGER ROD DIAMETER = 5/8"	CABLE TRAY ALL-DIRECTIONAL TRAPEZE SEISMIC SOLID BRACING SYSTEM 85 PLF MAX	KIT OPTIONS TW63A

SHB OPTION

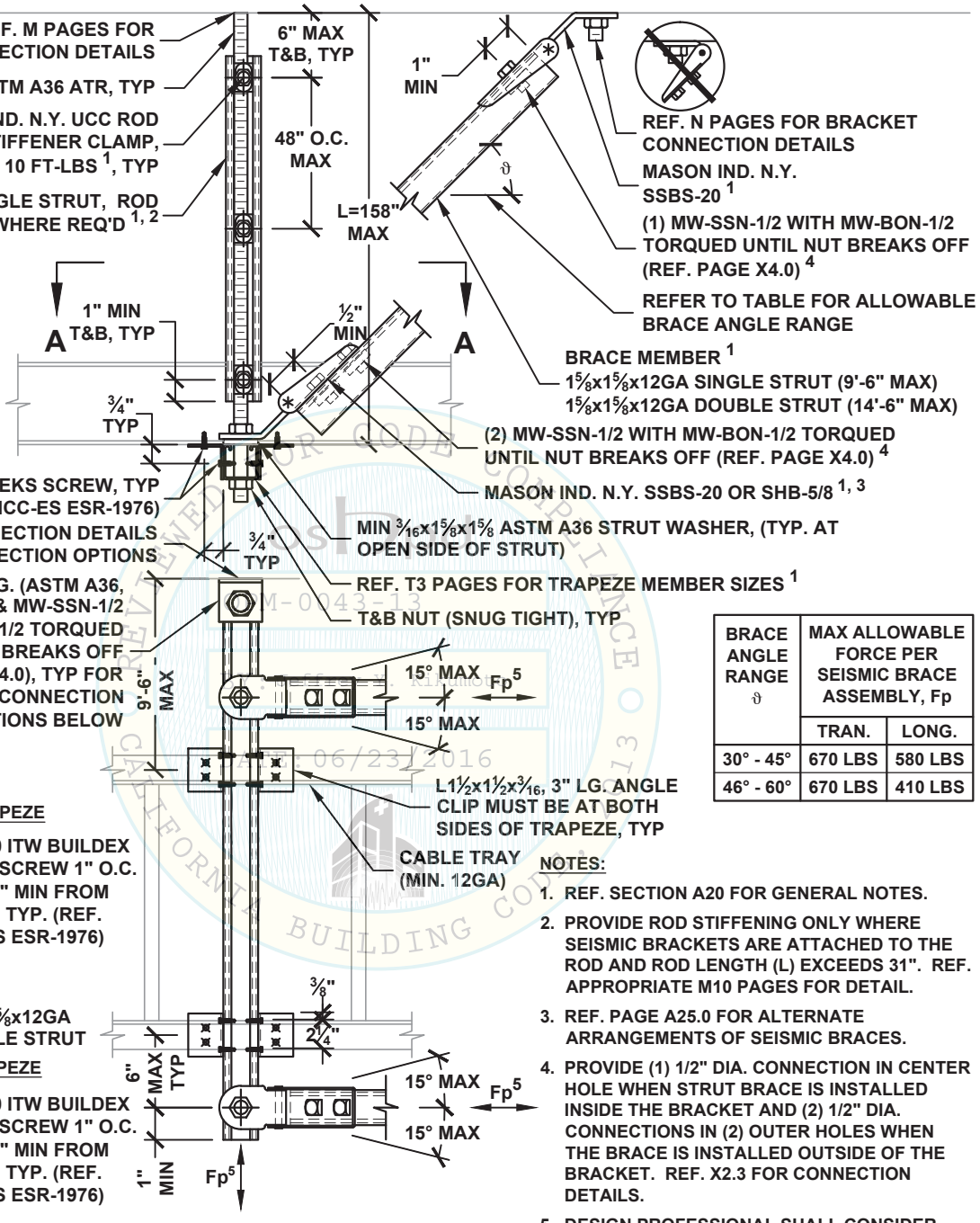

BRACE ANGLE RANGE ϑ	MAX ALLOWABLE FORCE PER SEISMIC BRACE ASSEMBLY, Fp	
	TRAN.	LONG.
30° - 45°	670 LBS	580 LBS
46° - 60°	670 LBS	410 LBS

NOTES:

1. REF. SECTION A20 FOR GENERAL NOTES.
2. PROVIDE ROD STIFFENING ONLY WHERE SEISMIC BRACKETS ARE ATTACHED TO THE ROD AND ROD LENGTH (L) EXCEEDS 31". REF. APPROPRIATE M10 PAGES FOR DETAIL.
3. REF. PAGE A25.0 FOR ALTERNATE ARRANGEMENTS OF SEISMIC BRACES.
4. PROVIDE (1) 1/2" DIA. CONNECTION IN CENTER HOLE WHEN STRUT BRACE IS INSTALLED INSIDE THE BRACKET AND (2) 1/2" DIA. CONNECTIONS IN (2) OUTER HOLES WHEN THE BRACE IS INSTALLED OUTSIDE OF THE BRACKET. REF. X2.3 FOR CONNECTION DETAILS.
5. DESIGN PROFESSIONAL SHALL CONSIDER ECCENTRIC LOAD DISTRIBUTION WHEN DETERMINING THE Fp VALUE USED IN DESIGN.

MASON WEST, INC.
1601 E. Miraloma Ave. Placentia, CA 92870
TEL (714) 630 - 0701, www.masonwest.com

Jiefu "Jeff" Zhang, SE
California SE No. S5270

PAGE
E4.32

HANGER ROD DIAMETER = ⅜"

PIPING/CONDUIT TRANSVERSE TRAPEZE SEISMIC SOLID BRACING SYSTEM 30 PLF MAX

KIT OPTIONS
TS12T
TS1220T
TSH312T
TSH320T

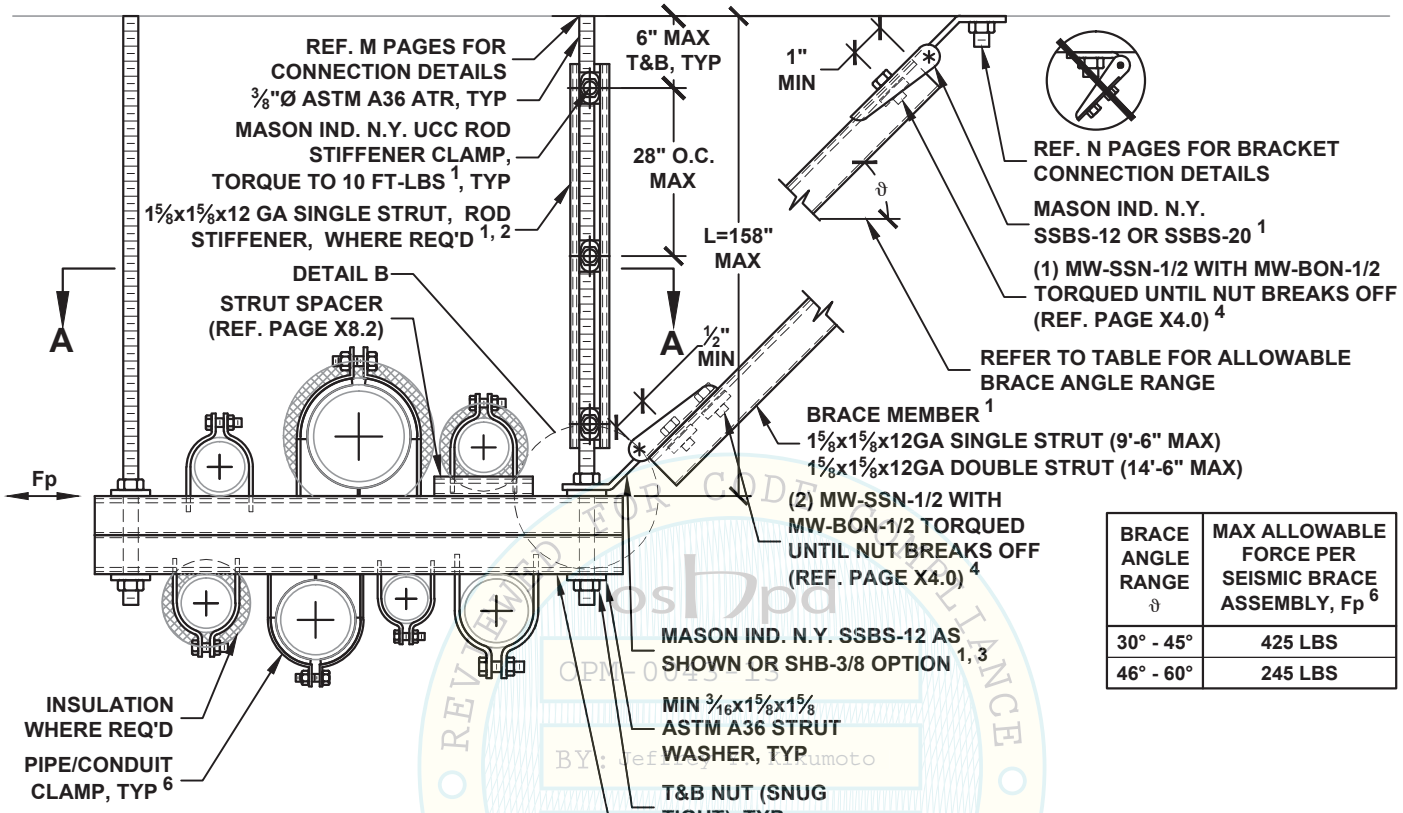

BRACE ANGLE RANGE ϑ	MAX ALLOWABLE FORCE PER SEISMIC BRACE ASSEMBLY, Fp [6]
30° - 45°	425 LBS
46° - 60°	245 LBS

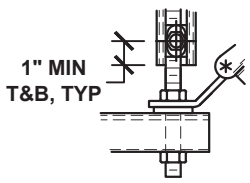

DETAIL B

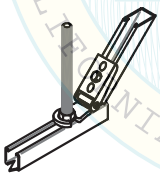

SHB OPTION

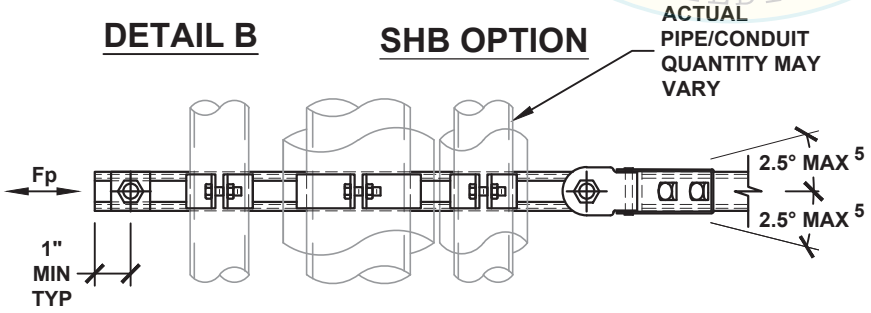

VIEW A-A

NOTES:

1. REF. SECTION A10 OR A20 FOR GENERAL NOTES.
2. PROVIDE ROD STIFFENING ONLY WHERE SEISMIC BRACKETS ARE ATTACHED TO THE ROD AND ROD LENGTH (L) EXCEEDS 18". REF. APPROPRIATE M10 PAGES FOR DETAIL.
3. REF. SECTION A15 OR A25 FOR ALTERNATE ARRANGEMENTS OF SEISMIC BRACES.
4. PROVIDE (1) 1/2" DIA. CONNECTION IN CENTER HOLE WHEN STRUT BRACE IS INSTALLED INSIDE THE BRACKET AND (2) 1/2" DIA. CONNECTIONS IN (2) OUTER HOLES WHEN THE BRACE IS INSTALLED OUTSIDE OF THE BRACKET. REF. X2.3 FOR CONNECTION DETAILS.
5. TO INCREASE ANGLE UP TO 15°, REF. PAGE A14.1 OR A24.2.
6. REF. X8.0 - X8.1.1 FOR PIPE/CONDUIT CLAMP OPTIONS. CLAMP RATINGS MAY REDUCE MAX ALLOWABLE Fp.

OSHPD OPM-0043-13 BY: Jeffrey H. Kikumoto DATE: 06/23/2016 CALIFORNIA BUILDING CODE 2013 REVIEWED FOR CODE COMPLIANCE

MASON WEST, INC.
1601 E. Miraloma Ave. Placentia, CA 92870
TEL (714) 630 - 0701, www.masonwest.com

Jiefu "Jeff" Zhang, SE
California SE No. S5270

PAGE
F1.10

HANGER ROD DIAMETER = ⅜"

PIPING/CONDUIT LONGITUDINAL TRAPEZE SEISMIC SOLID BRACING SYSTEM 30 PLF MAX

KIT OPTIONS
TS12L
TS1220L
TSH312L
TSH320L

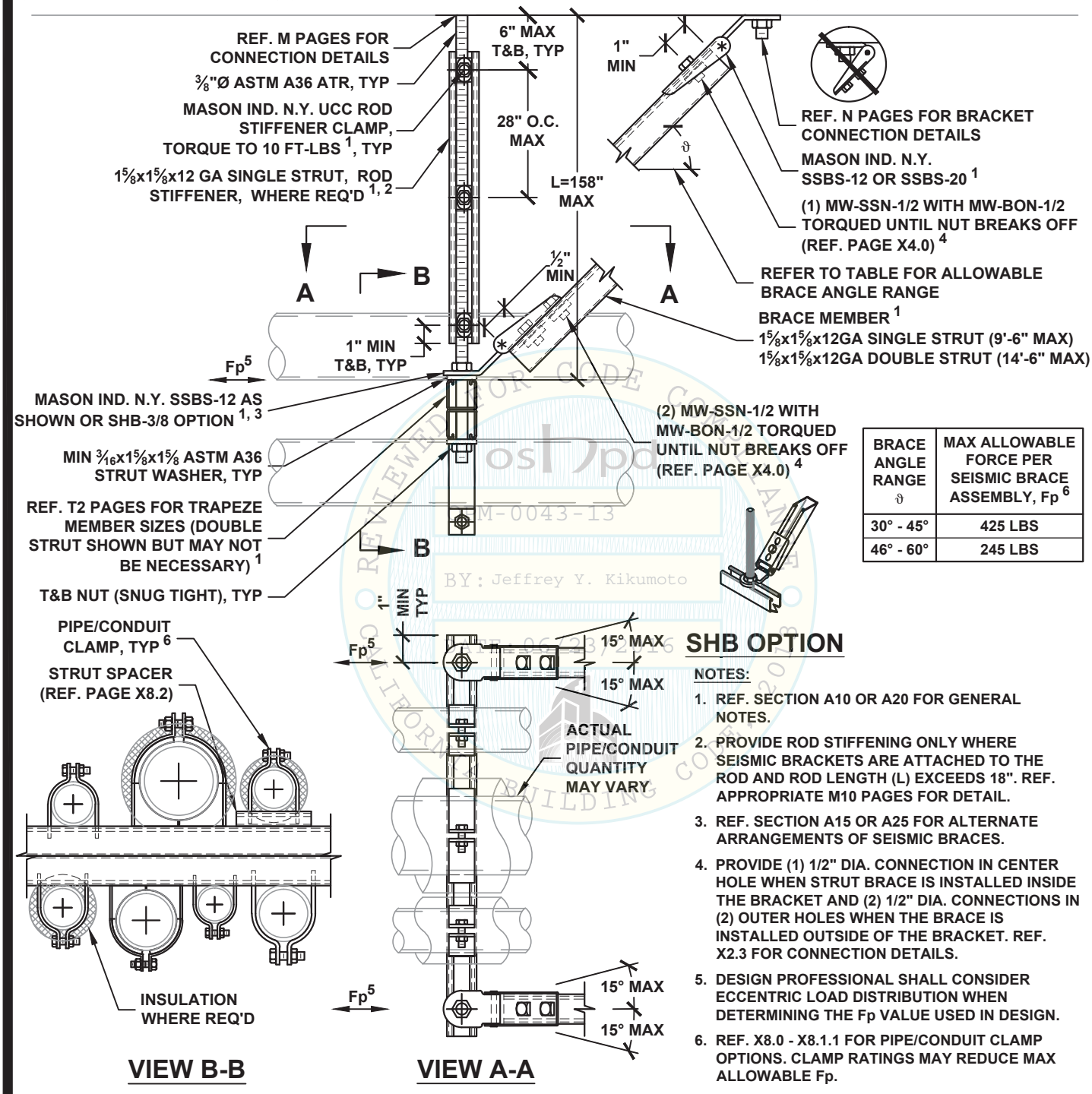

BRACE ANGLE RANGE ϑ	MAX ALLOWABLE FORCE PER SEISMIC BRACE ASSEMBLY, Fp 6
30° - 45°	425 LBS
46° - 60°	245 LBS

SHB OPTION

NOTES:

1. REF. SECTION A10 OR A20 FOR GENERAL NOTES.
2. PROVIDE ROD STIFFENING ONLY WHERE SEISMIC BRACKETS ARE ATTACHED TO THE ROD AND ROD LENGTH (L) EXCEEDS 18". REF. APPROPRIATE M10 PAGES FOR DETAIL.
3. REF. SECTION A15 OR A25 FOR ALTERNATE ARRANGEMENTS OF SEISMIC BRACES.
4. PROVIDE (1) 1/2" DIA. CONNECTION IN CENTER HOLE WHEN STRUT BRACE IS INSTALLED INSIDE THE BRACKET AND (2) 1/2" DIA. CONNECTIONS IN (2) OUTER HOLES WHEN THE BRACE IS INSTALLED OUTSIDE OF THE BRACKET. REF. X2.3 FOR CONNECTION DETAILS.
5. DESIGN PROFESSIONAL SHALL CONSIDER ECCENTRIC LOAD DISTRIBUTION WHEN DETERMINING THE Fp VALUE USED IN DESIGN.
6. REF. X8.0 - X8.1.1 FOR PIPE/CONDUIT CLAMP OPTIONS. CLAMP RATINGS MAY REDUCE MAX ALLOWABLE Fp.

VIEW B-B

VIEW A-A

MASON WEST, INC.
1601 E. Miraloma Ave. Placentia, CA 92870
TEL (714) 630 - 0701, www.masonwest.com

Jiefu "Jeff" Zhang, SE
California SE No. S5270

PAGE
F1.11

OSHPD PREAPPROVED OPM-0043-13 REVIEWED FOR CODE COMPLIANCE BY: Jeffrey Y. Kikumoto CALIFORNIA BUILDING CODE

HANGER ROD DIAMETER = ⅜"

PIPING/CONDUIT ALL-DIRECTIONAL TRAPEZE SEISMIC SOLID BRACING SYSTEM 30 PLF MAX

KIT OPTIONS
TS12A
TS1220A
TSH312A
TSH320A

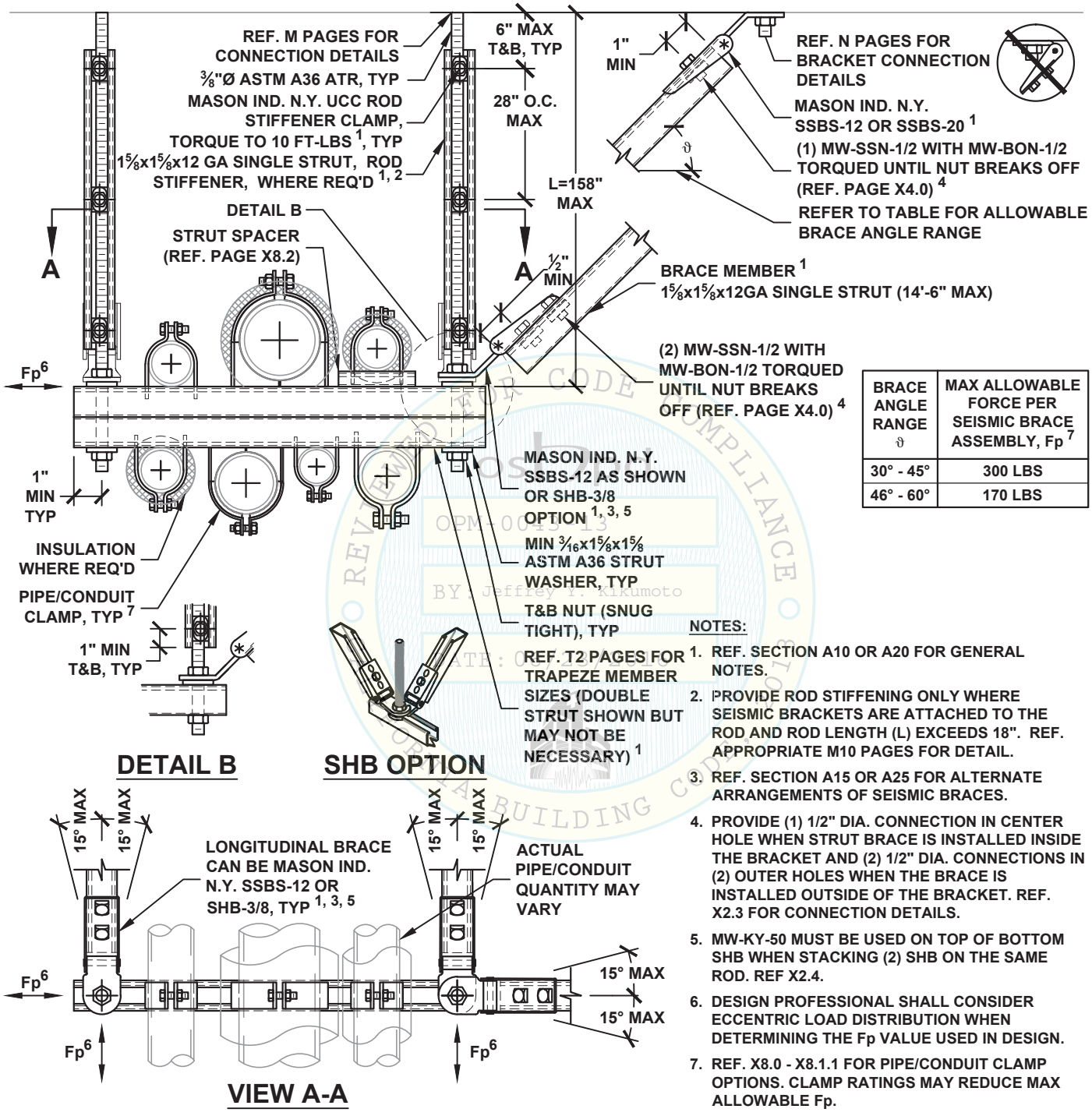

BRACE ANGLE RANGE ϑ	MAX ALLOWABLE FORCE PER SEISMIC BRACE ASSEMBLY, Fp [7]
30° - 45°	300 LBS
46° - 60°	170 LBS

DETAIL B

SHB OPTION

VIEW A-A

NOTES:

1. REF. SECTION A10 OR A20 FOR GENERAL NOTES.
2. PROVIDE ROD STIFFENING ONLY WHERE SEISMIC BRACKETS ARE ATTACHED TO THE ROD AND ROD LENGTH (L) EXCEEDS 18". REF. APPROPRIATE M10 PAGES FOR DETAIL.
3. REF. SECTION A15 OR A25 FOR ALTERNATE ARRANGEMENTS OF SEISMIC BRACES.
4. PROVIDE (1) 1/2" DIA. CONNECTION IN CENTER HOLE WHEN STRUT BRACE IS INSTALLED INSIDE THE BRACKET AND (2) 1/2" DIA. CONNECTIONS IN (2) OUTER HOLES WHEN THE BRACE IS INSTALLED OUTSIDE OF THE BRACKET. REF. X2.3 FOR CONNECTION DETAILS.
5. MW-KY-50 MUST BE USED ON TOP OF BOTTOM SHB WHEN STACKING (2) SHB ON THE SAME ROD. REF X2.4.
6. DESIGN PROFESSIONAL SHALL CONSIDER ECCENTRIC LOAD DISTRIBUTION WHEN DETERMINING THE Fp VALUE USED IN DESIGN.
7. REF. X8.0 - X8.1.1 FOR PIPE/CONDUIT CLAMP OPTIONS. CLAMP RATINGS MAY REDUCE MAX ALLOWABLE Fp.

OSHPD REVIEWED FOR CODE COMPLIANCE OPM-0043-13 BY: Jeffrey T. Kikumoto DATE: 06/23/2016 CALIFORNIA BUILDING CODE

MASON WEST, INC.
1601 E. Miraloma Ave. Placentia, CA 92870
TEL (714) 630 - 0701, www.masonwest.com

Jiefu "Jeff" Zhang, SE
California SE No. S5270

PAGE
F1.12

HANGER ROD DIAMETER = ½"

PIPING/CONDUIT TRANSVERSE TRAPEZE SEISMIC SOLID BRACING SYSTEM 60 PLF MAX

KIT OPTIONS
TS12T
TS1220T
TSH412T
TSH420T

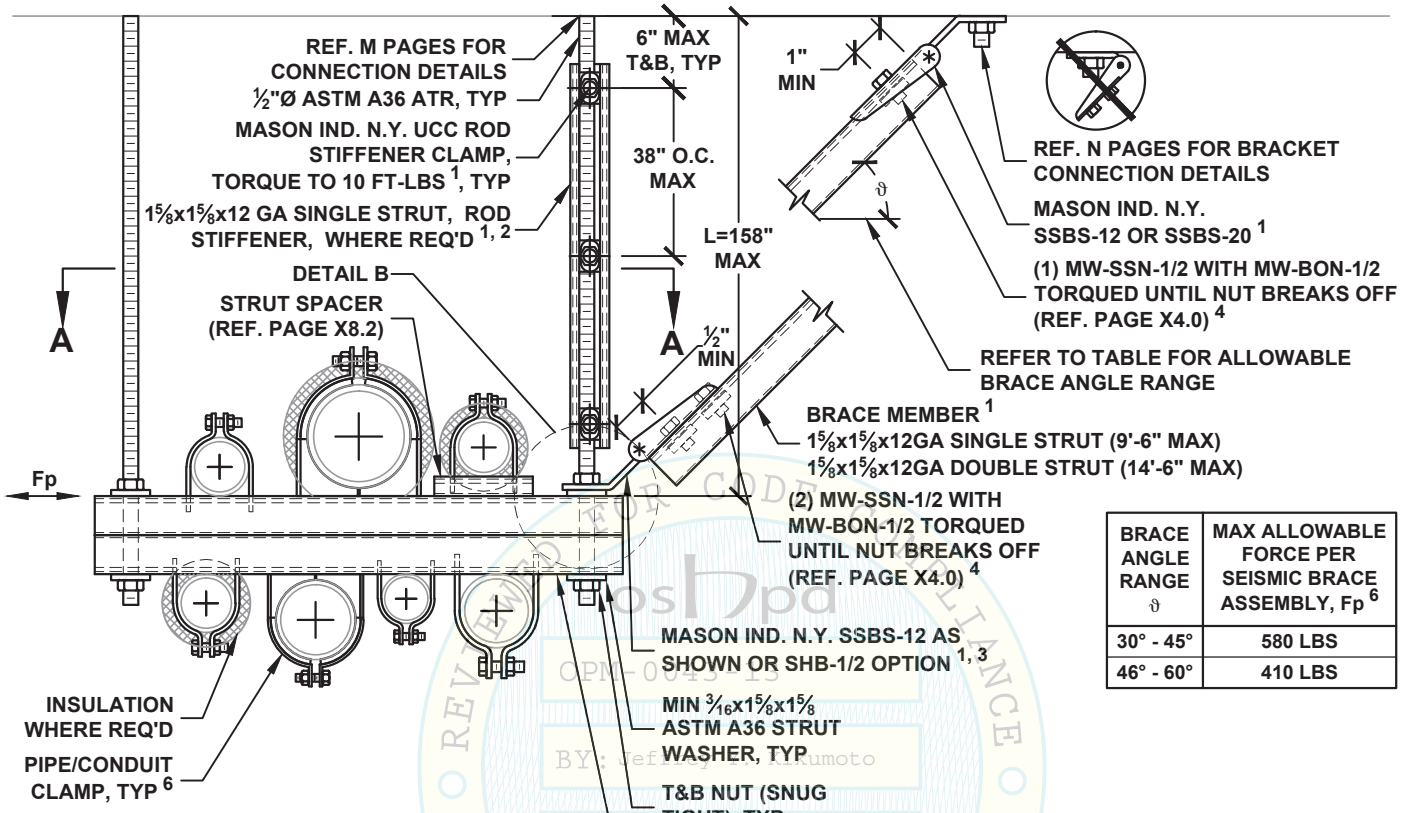

BRACE ANGLE RANGE ϑ	MAX ALLOWABLE FORCE PER SEISMIC BRACE ASSEMBLY, Fp [6]
30° - 45°	580 LBS
46° - 60°	410 LBS

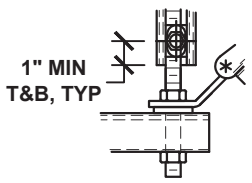

DETAIL B

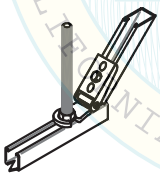

SHB OPTION

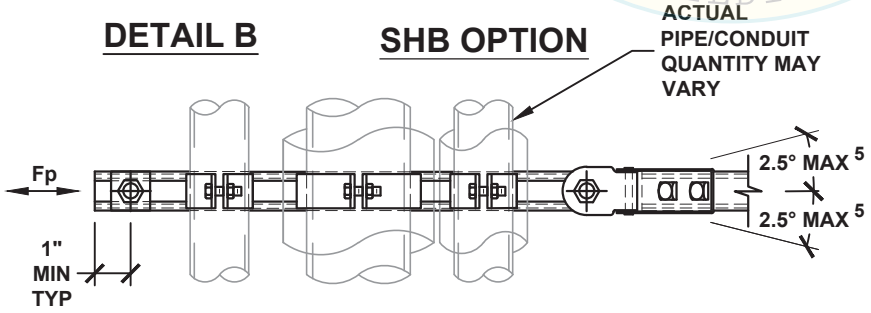

VIEW A-A

NOTES:

1. REF. SECTION A10 OR A20 FOR GENERAL NOTES.
2. PROVIDE ROD STIFFENING ONLY WHERE SEISMIC BRACKETS ARE ATTACHED TO THE ROD AND ROD LENGTH (L) EXCEEDS 25". REF. APPROPRIATE M10 PAGES FOR DETAIL.
3. REF. SECTION A15 OR A25 FOR ALTERNATE ARRANGEMENTS OF SEISMIC BRACES.
4. PROVIDE (1) 1/2" DIA. CONNECTION IN CENTER HOLE WHEN STRUT BRACE IS INSTALLED INSIDE THE BRACKET AND (2) 1/2" DIA. CONNECTIONS IN (2) OUTER HOLES WHEN THE BRACE IS INSTALLED OUTSIDE OF THE BRACKET. REF. X2.3 FOR CONNECTION DETAILS.
5. TO INCREASE ANGLE UP TO 15°, REF. PAGE A14.1 OR A24.2.
6. REF. X8.0 - X8.1.1 FOR PIPE/CONDUIT CLAMP OPTIONS. CLAMP RATINGS MAY REDUCE MAX ALLOWABLE Fp.

REVIEWED FOR CODE COMPLIANCE
OSHPD
OPM-0043-13
BY: Jeffrey H. Kikumoto
DATE: 06/23/2016
CALIFORNIA BUILDING CODE 2013

MASON WEST, INC.
1601 E. Miraloma Ave. Placentia, CA 92870
TEL (714) 630 - 0701, www.masonwest.com

Jiefu "Jeff" Zhang, SE
California SE No. S5270

PAGE
F1.20

HANGER ROD DIAMETER = ½"

PIPING/CONDUIT LONGITUDINAL TRAPEZE SEISMIC SOLID BRACING SYSTEM 60 PLF MAX

KIT OPTIONS
TS12L
TS1220L
TSH412L
TSH420L

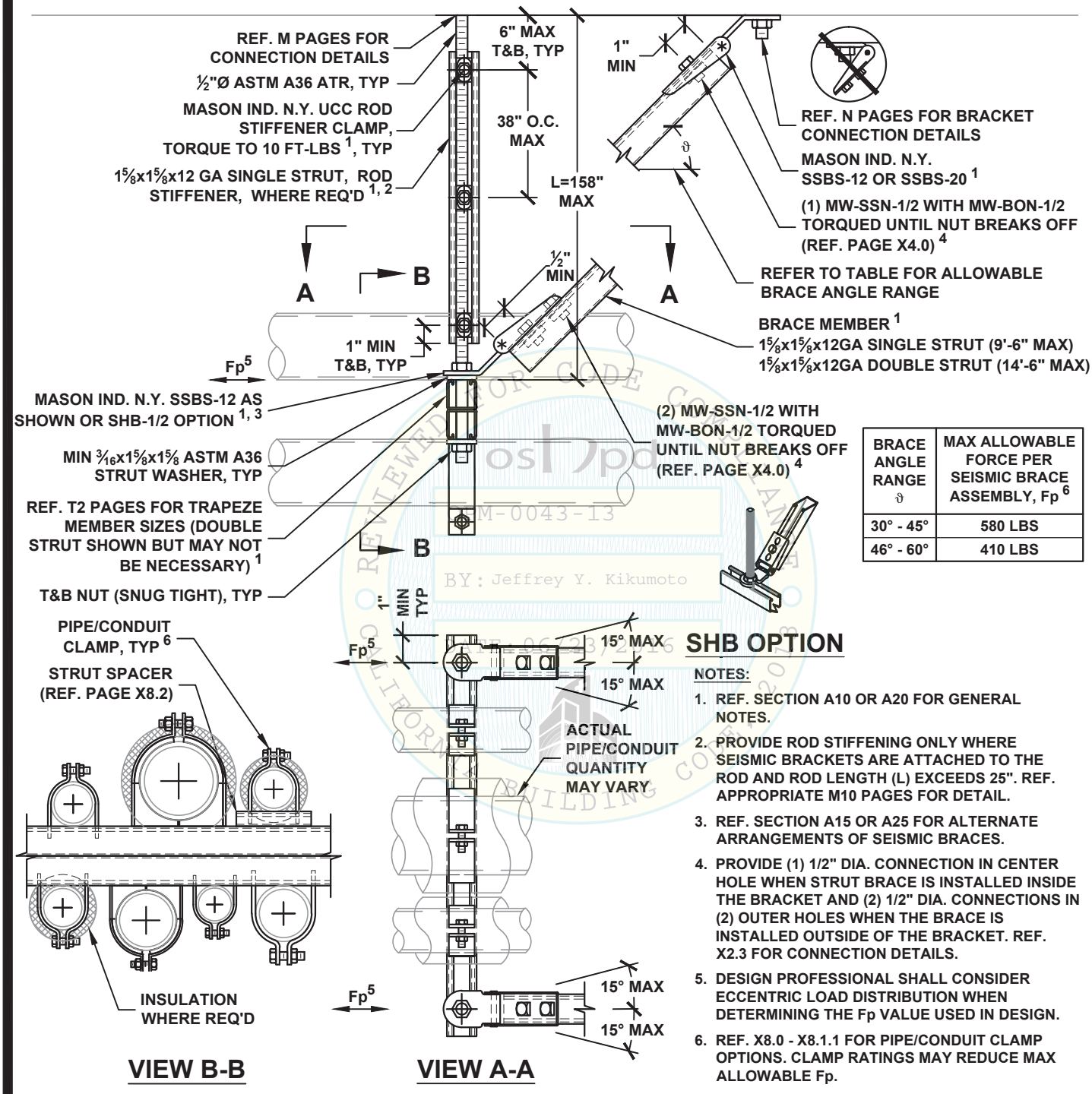

BRACE ANGLE RANGE ϑ	MAX ALLOWABLE FORCE PER SEISMIC BRACE ASSEMBLY, Fp [6]
30° - 45°	580 LBS
46° - 60°	410 LBS

SHB OPTION

NOTES:

1. REF. SECTION A10 OR A20 FOR GENERAL NOTES.
2. PROVIDE ROD STIFFENING ONLY WHERE SEISMIC BRACKETS ARE ATTACHED TO THE ROD AND ROD LENGTH (L) EXCEEDS 25". REF. APPROPRIATE M10 PAGES FOR DETAIL.
3. REF. SECTION A15 OR A25 FOR ALTERNATE ARRANGEMENTS OF SEISMIC BRACES.
4. PROVIDE (1) 1/2" DIA. CONNECTION IN CENTER HOLE WHEN STRUT BRACE IS INSTALLED INSIDE THE BRACKET AND (2) 1/2" DIA. CONNECTIONS IN (2) OUTER HOLES WHEN THE BRACE IS INSTALLED OUTSIDE OF THE BRACKET. REF. X2.3 FOR CONNECTION DETAILS.
5. DESIGN PROFESSIONAL SHALL CONSIDER ECCENTRIC LOAD DISTRIBUTION WHEN DETERMINING THE Fp VALUE USED IN DESIGN.
6. REF. X8.0 - X8.1.1 FOR PIPE/CONDUIT CLAMP OPTIONS. CLAMP RATINGS MAY REDUCE MAX ALLOWABLE Fp.

REVIEWED FOR CODE COMPLIANCE
OSHPD
OPM-0043-13
BY: Jeffrey Y. Kikumoto
DATE: 06/23/2016
CALIFORNIA BUILDING CODE

MASON WEST, INC.
1601 E. Miraloma Ave. Placentia, CA 92870
TEL (714) 630 - 0701, www.masonwest.com

Jiefu "Jeff" Zhang, SE
California SE No. S5270

PAGE
F1.21

HANGER ROD DIAMETER = ½"

PIPING/CONDUIT ALL-DIRECTIONAL TRAPEZE SEISMIC SOLID BRACING SYSTEM 60 PLF MAX

KIT OPTIONS
TS12A
TS1220A
TSH412A
TSH420A

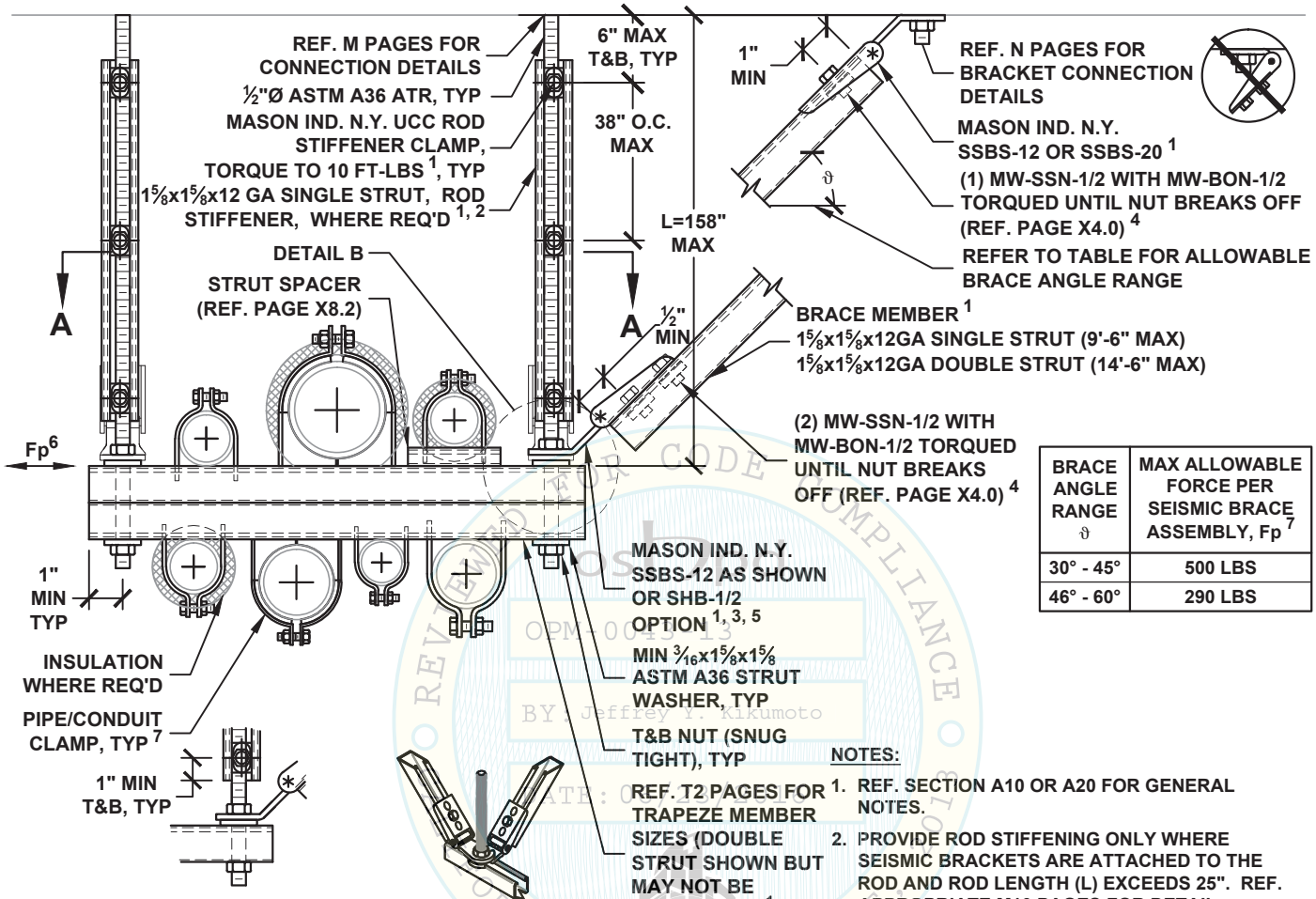

BRACE ANGLE RANGE ϑ	MAX ALLOWABLE FORCE PER SEISMIC BRACE ASSEMBLY, Fp [7]
30° - 45°	500 LBS
46° - 60°	290 LBS

DETAIL B

SHB OPTION

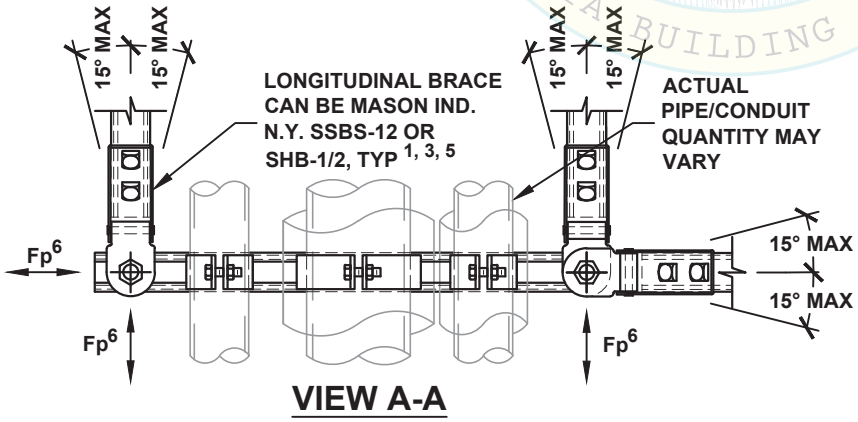

VIEW A-A

NOTES:

1. REF. SECTION A10 OR A20 FOR GENERAL NOTES.
2. PROVIDE ROD STIFFENING ONLY WHERE SEISMIC BRACKETS ARE ATTACHED TO THE ROD AND ROD LENGTH (L) EXCEEDS 25". REF. APPROPRIATE M10 PAGES FOR DETAIL.
3. REF. SECTION A15 OR A25 FOR ALTERNATE ARRANGEMENTS OF SEISMIC BRACES.
4. PROVIDE (1) 1/2" DIA. CONNECTION IN CENTER HOLE WHEN STRUT BRACE IS INSTALLED INSIDE THE BRACKET AND (2) 1/2" DIA. CONNECTIONS IN (2) OUTER HOLES WHEN THE BRACE IS INSTALLED OUTSIDE OF THE BRACKET. REF. X2.3 FOR CONNECTION DETAILS.
5. MW-KY-50 MUST BE USED ON TOP OF BOTTOM SHB WHEN STACKING (2) SHB ON THE SAME ROD. REF X2.4.
6. DESIGN PROFESSIONAL SHALL CONSIDER ECCENTRIC LOAD DISTRIBUTION WHEN DETERMINING THE Fp VALUE USED IN DESIGN.
7. REF. X8.0 - X8.1.1 FOR PIPE/CONDUIT CLAMP OPTIONS. CLAMP RATINGS MAY REDUCE MAX ALLOWABLE Fp.

REVIEWED FOR CODE COMPLIANCE
OPM-0043-13
BY: Jeffrey Y. Kikumoto
DATE: 06/23/2016
CITY OF LA BUILDING CODE

MASON WEST, INC.
1601 E. Miraloma Ave. Placentia, CA 92870
TEL (714) 630 - 0701, www.masonwest.com

Jiefu "Jeff" Zhang, SE
California SE No. S5270

PAGE
F1.22

HANGER ROD DIAMETER = 5/8"

PIPING/CONDUIT TRANSVERSE TRAPEZE SEISMIC SOLID BRACING SYSTEM 100 PLF MAX

KIT OPTIONS
TS20T
TSH520T

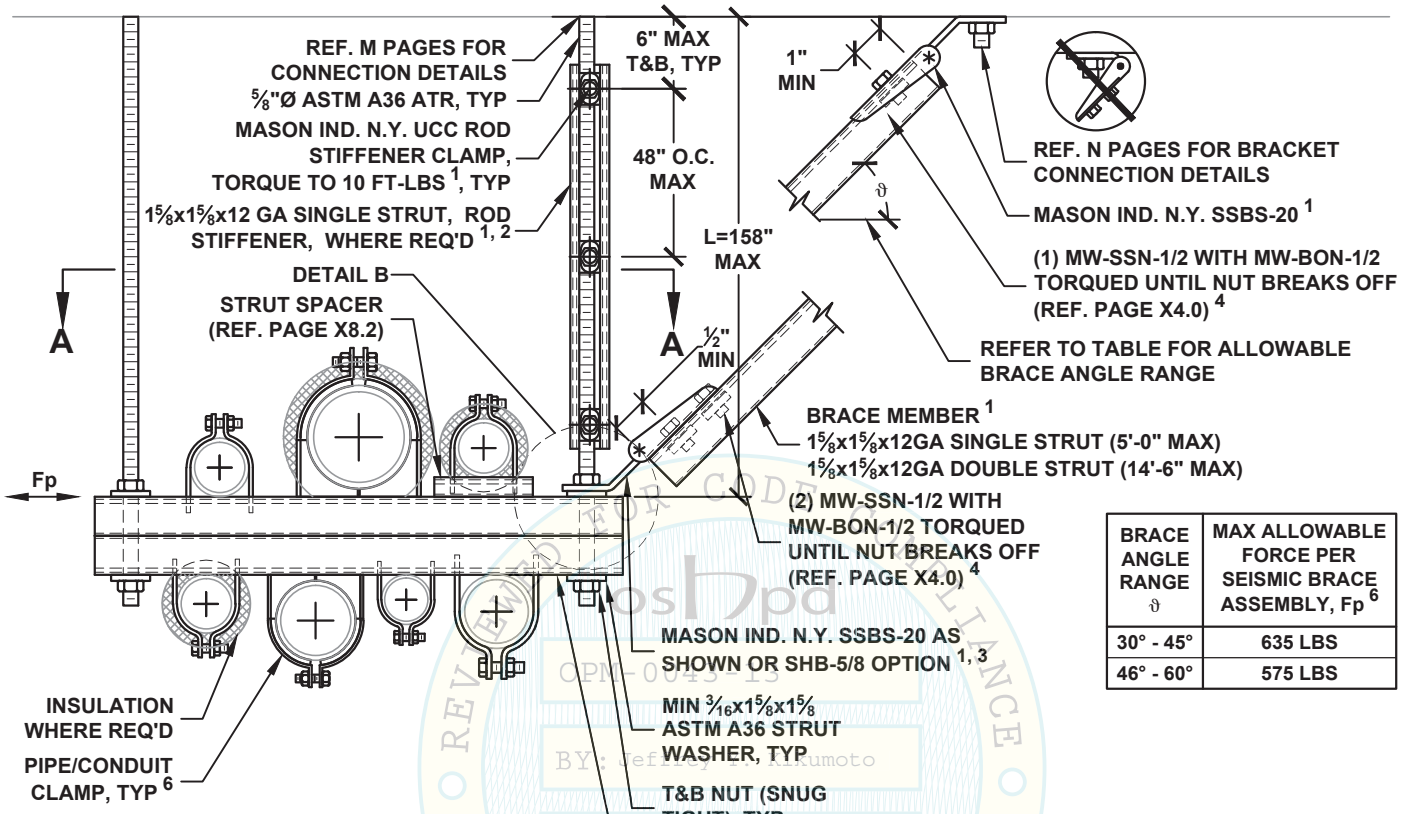

BRACE ANGLE RANGE ϑ	MAX ALLOWABLE FORCE PER SEISMIC BRACE ASSEMBLY, Fp 6
30° - 45°	635 LBS
46° - 60°	575 LBS

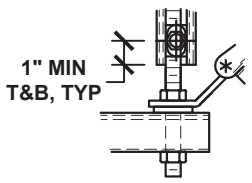

DETAIL B

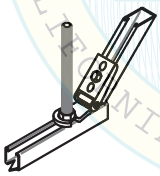

SHB OPTION

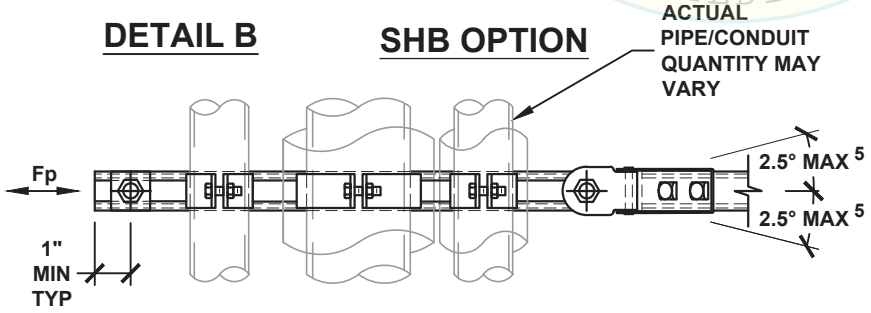

VIEW A-A

NOTES:

1. REF. SECTION A10 OR A20 FOR GENERAL NOTES.
2. PROVIDE ROD STIFFENING ONLY WHERE SEISMIC BRACKETS ARE ATTACHED TO THE ROD AND ROD LENGTH (L) EXCEEDS 31". REF. APPROPRIATE M10 PAGES FOR DETAIL.
3. REF. SECTION A15 OR A25 FOR ALTERNATE ARRANGEMENTS OF SEISMIC BRACES.
4. PROVIDE (1) 1/2" DIA. CONNECTION IN CENTER HOLE WHEN STRUT BRACE IS INSTALLED INSIDE THE BRACKET AND (2) 1/2" DIA. CONNECTIONS IN (2) OUTER HOLES WHEN THE BRACE IS INSTALLED OUTSIDE OF THE BRACKET. REF. X2.3 FOR CONNECTION DETAILS.
5. TO INCREASE ANGLE UP TO 15°, REF. PAGE A14.1 OR A24.2.
6. REF. X8.0 - X8.1.1 FOR PIPE/CONDUIT CLAMP OPTIONS. CLAMP RATINGS MAY REDUCE MAX ALLOWABLE Fp.

OSHPD OPM-0043-13 BY: Jeffrey H. Kikumoto DATE: 06/23/2016 REVIEWED FOR CODE COMPLIANCE CALIFORNIA BUILDING CODE 2013

MASON WEST, INC.
1601 E. Miraloma Ave. Placentia, CA 92870
TEL (714) 630 - 0701, www.masonwest.com

Jiefu "Jeff" Zhang, SE
California SE No. S5270

PAGE
F1.30

HANGER ROD DIAMETER = 5/8"

PIPING/CONDUIT LONGITUDINAL TRAPEZE SEISMIC SOLID BRACING SYSTEM 100 PLF MAX

KIT OPTIONS
TS20L
TSH520L

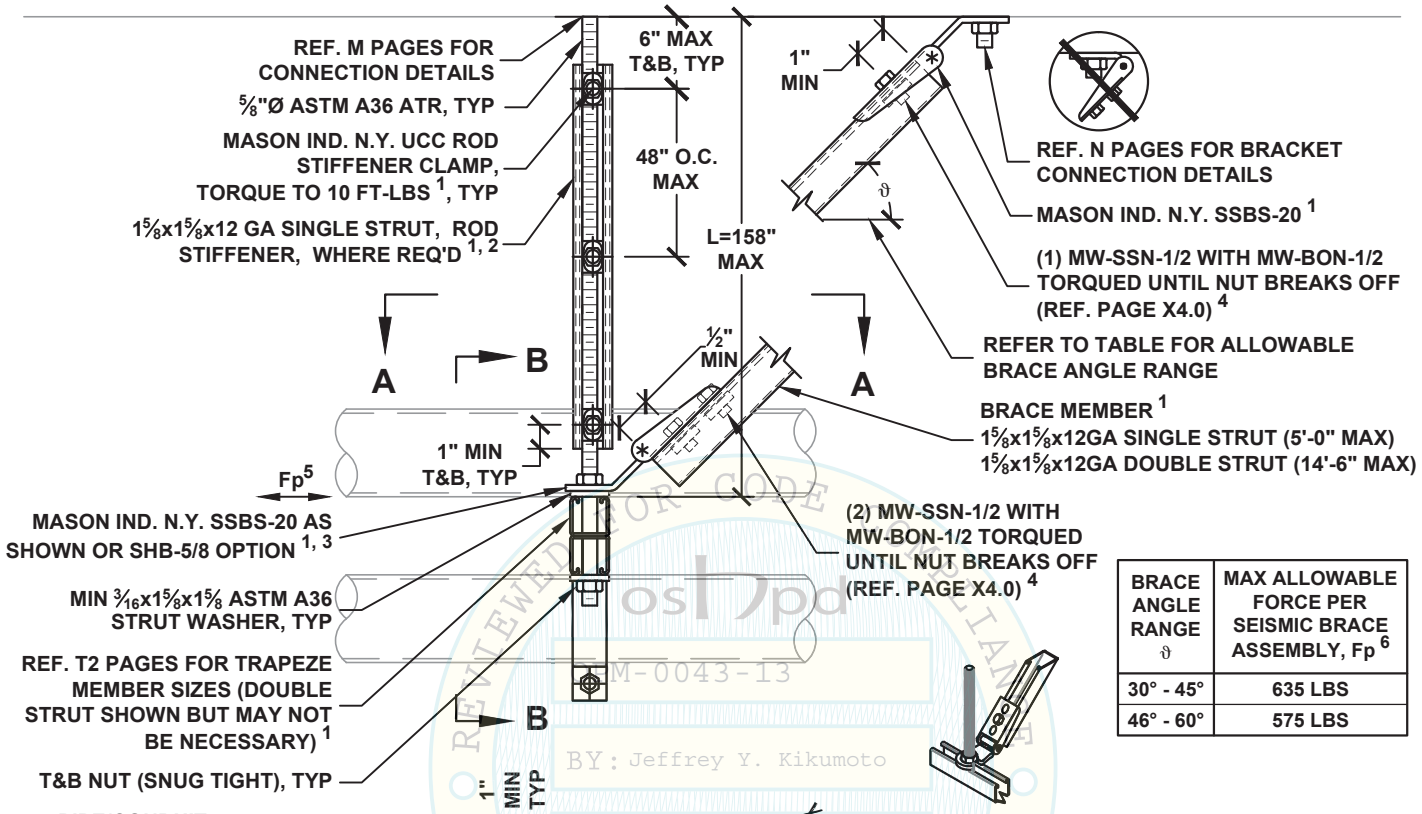

BRACE ANGLE RANGE ϑ	MAX ALLOWABLE FORCE PER SEISMIC BRACE ASSEMBLY, Fp 6
30° - 45°	635 LBS
46° - 60°	575 LBS

SHB OPTION

NOTES:

1. REF. SECTION A10 OR A20 FOR GENERAL NOTES.
2. PROVIDE ROD STIFFENING ONLY WHERE SEISMIC BRACKETS ARE ATTACHED TO THE ROD AND ROD LENGTH (L) EXCEEDS 31". REF. APPROPRIATE M10 PAGES FOR DETAIL.
3. REF. SECTION A15 OR A25 FOR ALTERNATE ARRANGEMENTS OF SEISMIC BRACES.
4. PROVIDE (1) 1/2" DIA. CONNECTION IN CENTER HOLE WHEN STRUT BRACE IS INSTALLED INSIDE THE BRACKET AND (2) 1/2" DIA. CONNECTIONS IN (2) OUTER HOLES WHEN THE BRACE IS INSTALLED OUTSIDE OF THE BRACKET. REF. X2.3 FOR CONNECTION DETAILS.
5. DESIGN PROFESSIONAL SHALL CONSIDER ECCENTRIC LOAD DISTRIBUTION WHEN DETERMINING THE Fp VALUE USED IN DESIGN.
6. REF. X8.0 - X8.1.1 FOR PIPE/CONDUIT CLAMP OPTIONS. CLAMP RATINGS MAY REDUCE MAX ALLOWABLE Fp.

VIEW B-B

VIEW A-A

OSHPD OPM-0043-13 BY: Jeffrey Y. Kikumoto 06/23/2016 REVIEWED FOR CODE COMPLIANCE CALIFORNIA BUILDING CODE

MASON WEST, INC.
1601 E. Miraloma Ave. Placentia, CA 92870
TEL (714) 630 - 0701, www.masonwest.com

Jiefu "Jeff" Zhang, SE
California SE No. S5270

PAGE
F1.31

HANGER ROD DIAMETER = 5/8"

PIPING/CONDUIT ALL-DIRECTIONAL TRAPEZE SEISMIC SOLID BRACING SYSTEM 100 PLF MAX

KIT OPTIONS
TS20A
TSH520A

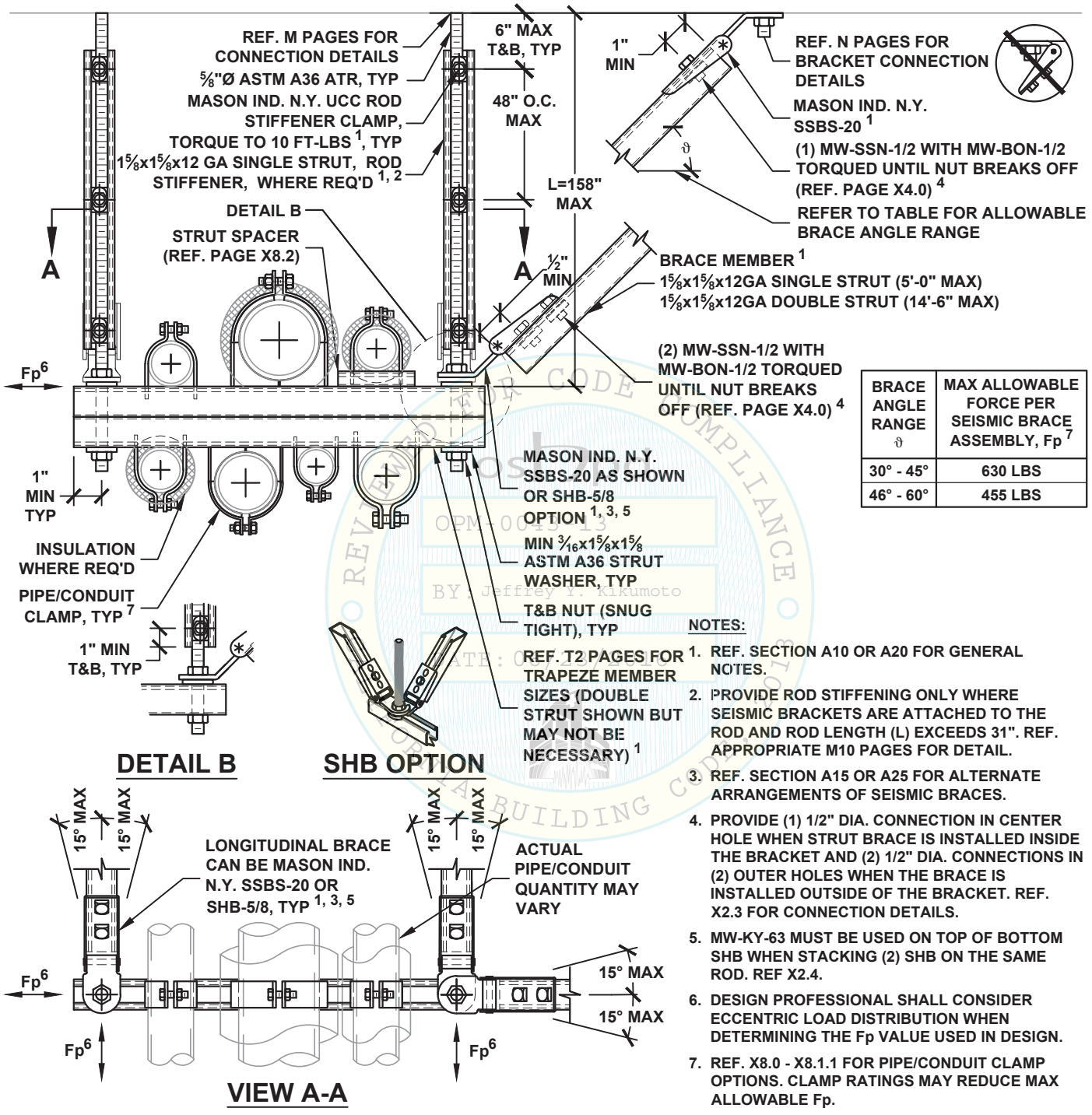

BRACE ANGLE RANGE ϑ	MAX ALLOWABLE FORCE PER SEISMIC BRACE ASSEMBLY, Fp 7
30° - 45°	630 LBS
46° - 60°	455 LBS

DETAIL B

SHB OPTION

VIEW A-A

NOTES:

1. REF. SECTION A10 OR A20 FOR GENERAL NOTES.
2. PROVIDE ROD STIFFENING ONLY WHERE SEISMIC BRACKETS ARE ATTACHED TO THE ROD AND ROD LENGTH (L) EXCEEDS 31". REF. APPROPRIATE M10 PAGES FOR DETAIL.
3. REF. SECTION A15 OR A25 FOR ALTERNATE ARRANGEMENTS OF SEISMIC BRACES.
4. PROVIDE (1) 1/2" DIA. CONNECTION IN CENTER HOLE WHEN STRUT BRACE IS INSTALLED INSIDE THE BRACKET AND (2) 1/2" DIA. CONNECTIONS IN (2) OUTER HOLES WHEN THE BRACE IS INSTALLED OUTSIDE OF THE BRACKET. REF. X2.3 FOR CONNECTION DETAILS.
5. MW-KY-63 MUST BE USED ON TOP OF BOTTOM SHB WHEN STACKING (2) SHB ON THE SAME ROD. REF X2.4.
6. DESIGN PROFESSIONAL SHALL CONSIDER ECCENTRIC LOAD DISTRIBUTION WHEN DETERMINING THE Fp VALUE USED IN DESIGN.
7. REF. X8.0 - X8.1.1 FOR PIPE/CONDUIT CLAMP OPTIONS. CLAMP RATINGS MAY REDUCE MAX ALLOWABLE Fp.

REVIEWED FOR CODE COMPLIANCE
OPM-0043-13
BY: Jeffrey Y. Kikumoto
DATE: 06/23/2016
CALIFORNIA BUILDING CODE

MASON WEST, INC.
1601 E. Miraloma Ave. Placentia, CA 92870
TEL (714) 630 - 0701, www.masonwest.com

Jiefu "Jeff" Zhang, SE
California SE No. S5270

PAGE
F1.32

HANGER ROD DIAMETER = 5/8"

PIPING/CONDUIT TRANSVERSE TRAPEZE SEISMIC SOLID BRACING SYSTEM 100 PLF MAX

KIT OPTIONS
TSH5T

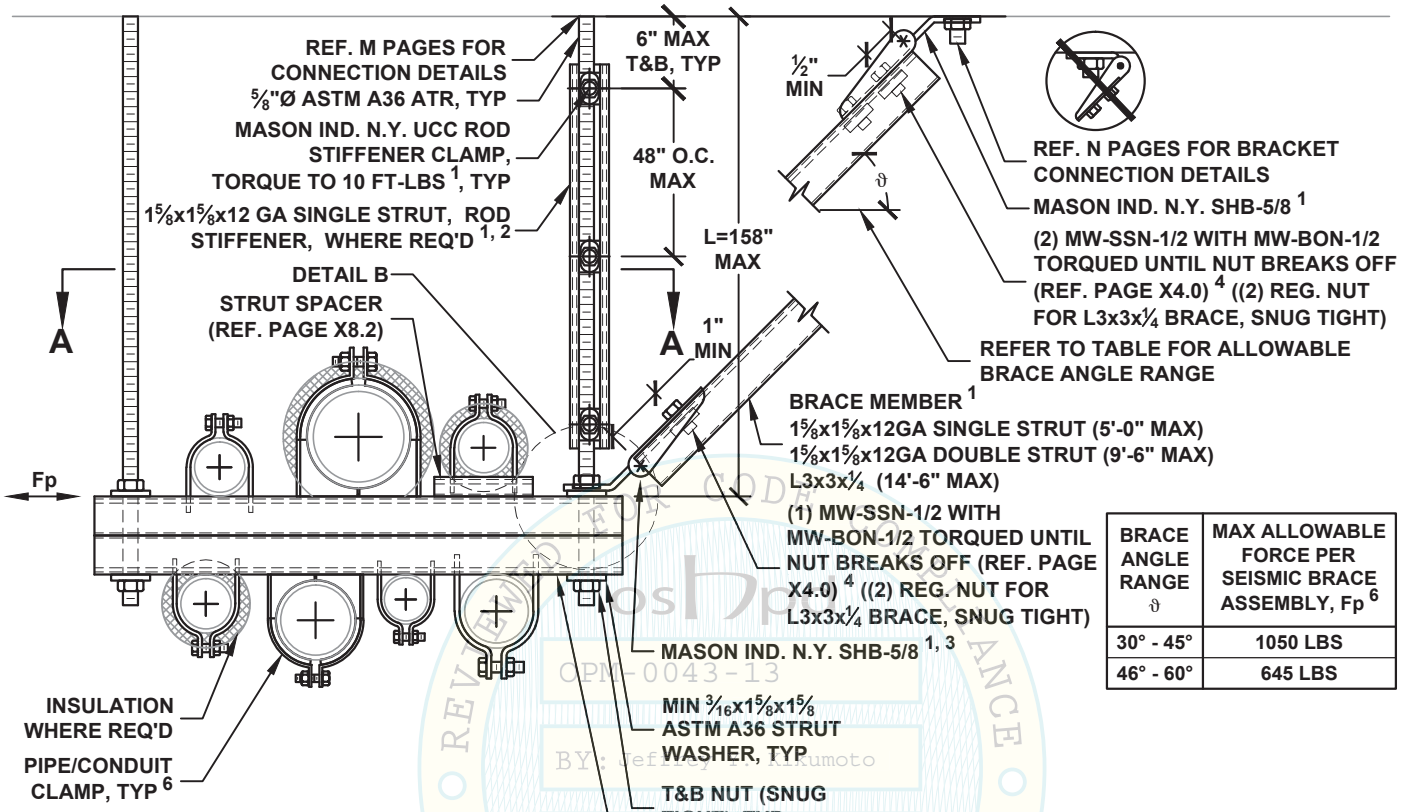

BRACE ANGLE RANGE ϑ	MAX ALLOWABLE FORCE PER SEISMIC BRACE ASSEMBLY, Fp 6
30° - 45°	1050 LBS
46° - 60°	645 LBS

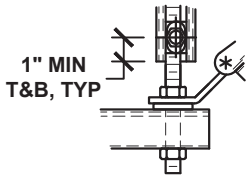

DETAIL B

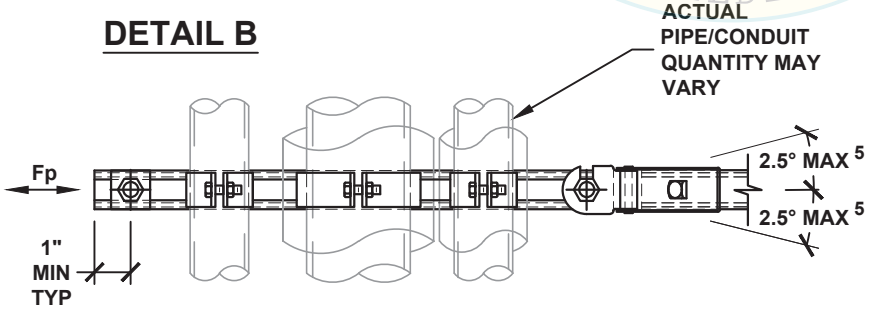

VIEW A-A

NOTES:

1. REF. SECTION A10 OR A20 FOR GENERAL NOTES.
2. PROVIDE ROD STIFFENING ONLY WHERE SEISMIC BRACKETS ARE ATTACHED TO THE ROD AND ROD LENGTH (L) EXCEEDS 31". REF. APPROPRIATE M10 PAGES FOR DETAIL.
3. REF. SECTION A15 OR A25 FOR ALTERNATE ARRANGEMENTS OF SEISMIC BRACES.
4. PROVIDE (1) 1/2" DIA. CONNECTION IN CENTER HOLE WHEN STRUT BRACE IS INSTALLED INSIDE THE BRACKET AND (2) 1/2" DIA. CONNECTIONS IN (2) OUTER HOLES WHEN THE BRACE IS INSTALLED OUTSIDE OF THE BRACKET. REF. X2.3 FOR CONNECTION DETAILS.
5. TO INCREASE ANGLE UP TO 15°, REF. PAGE A14.1 OR A24.2.
6. REF. X8.0 - X8.1.1 FOR PIPE/CONDUIT CLAMP OPTIONS. CLAMP RATINGS MAY REDUCE MAX ALLOWABLE Fp.

OSHPD PREAPPROVED FOR CODE COMPLIANCE
OPM-0043-13
BY: Jeffrey H. Kikumoto
DATE: 06/23/2016
CALIFORNIA BUILDING CODE 2013

MASON WEST, INC.
1601 E. Miraloma Ave. Placentia, CA 92870
TEL (714) 630 - 0701, www.masonwest.com

Jiefu "Jeff" Zhang, SE
California SE No. S5270

PAGE
F1.33

HANGER ROD DIAMETER = 5/8"

PIPING/CONDUIT LONGITUDINAL TRAPEZE SEISMIC SOLID BRACING SYSTEM 100 PLF MAX

KIT OPTIONS
TSH5L

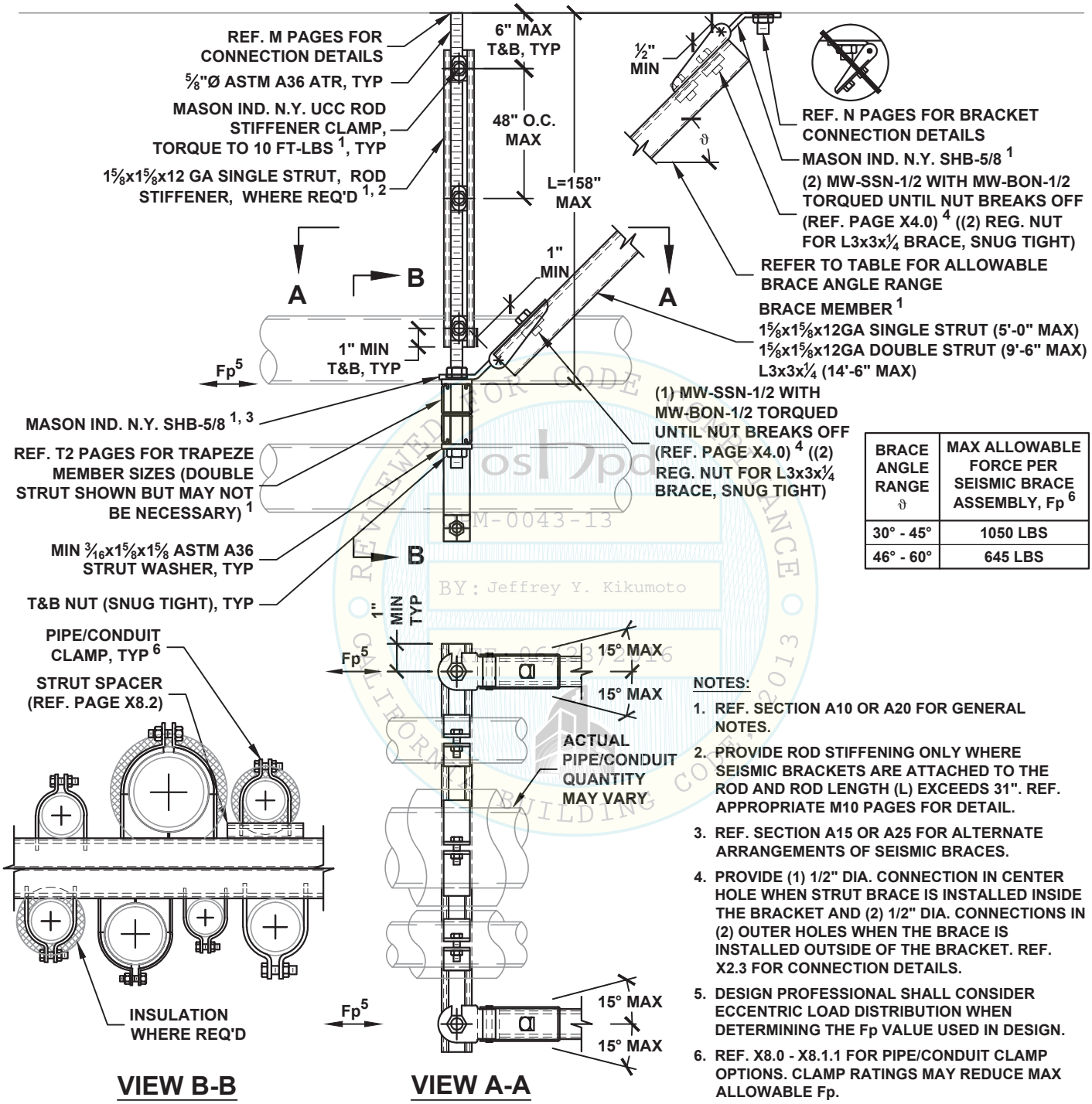

BRACE ANGLE RANGE ϑ	MAX ALLOWABLE FORCE PER SEISMIC BRACE ASSEMBLY, Fp 6
30° - 45°	1050 LBS
46° - 60°	645 LBS

VIEW B-B

VIEW A-A

NOTES:

1. REF. SECTION A10 OR A20 FOR GENERAL NOTES.
2. PROVIDE ROD STIFFENING ONLY WHERE SEISMIC BRACKETS ARE ATTACHED TO THE ROD AND ROD LENGTH (L) EXCEEDS 31". REF. APPROPRIATE M10 PAGES FOR DETAIL.
3. REF. SECTION A15 OR A25 FOR ALTERNATE ARRANGEMENTS OF SEISMIC BRACES.
4. PROVIDE (1) 1/2" DIA. CONNECTION IN CENTER HOLE WHEN STRUT BRACE IS INSTALLED INSIDE THE BRACKET AND (2) 1/2" DIA. CONNECTIONS IN (2) OUTER HOLES WHEN THE BRACE IS INSTALLED OUTSIDE OF THE BRACKET. REF. X2.3 FOR CONNECTION DETAILS.
5. DESIGN PROFESSIONAL SHALL CONSIDER ECCENTRIC LOAD DISTRIBUTION WHEN DETERMINING THE Fp VALUE USED IN DESIGN.
6. REF. X8.0 - X8.1.1 FOR PIPE/CONDUIT CLAMP OPTIONS. CLAMP RATINGS MAY REDUCE MAX ALLOWABLE Fp.

OSHPD PREAPPROVED FOR CODE COMPLIANCE OPM-0043-13 BY: Jeffrey Y. Kikumoto 06/23/2016 CALIFORNIA BUILDING CODE 2013

MASON WEST, INC.
1601 E. Miraloma Ave. Placentia, CA 92870
TEL (714) 630 - 0701, www.masonwest.com

Jiefu "Jeff" Zhang, SE
California SE No. S5270

PAGE
F1.34

HANGER ROD DIAMETER = 5/8"	PIPING/CONDUIT ALL-DIRECTIONAL TRAPEZE SEISMIC SOLID BRACING SYSTEM 100 PLF MAX	KIT OPTIONS TSH5A

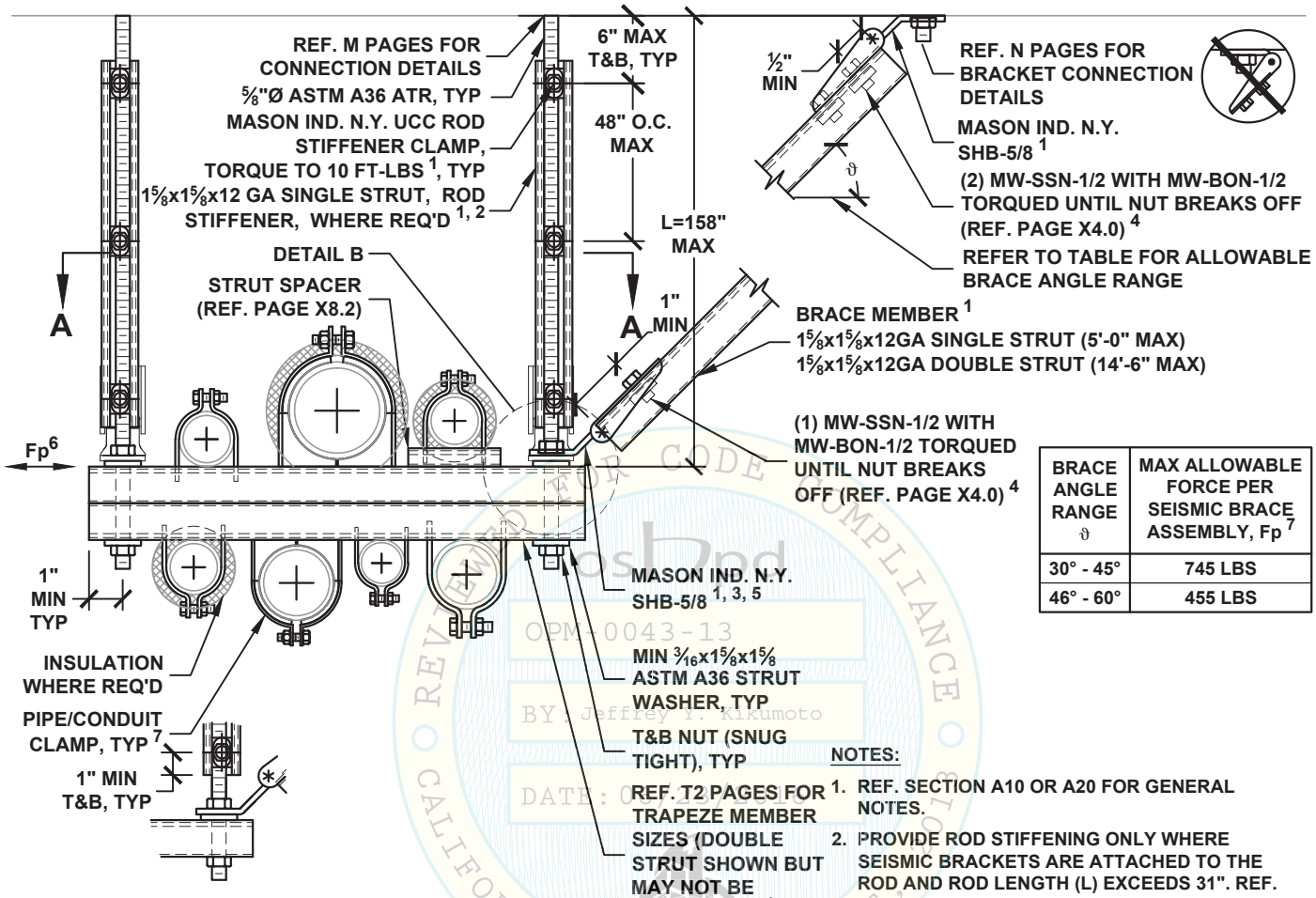

BRACE ANGLE RANGE ϑ	MAX ALLOWABLE FORCE PER SEISMIC BRACE ASSEMBLY, Fp 7
30° - 45°	745 LBS
46° - 60°	455 LBS

DETAIL B

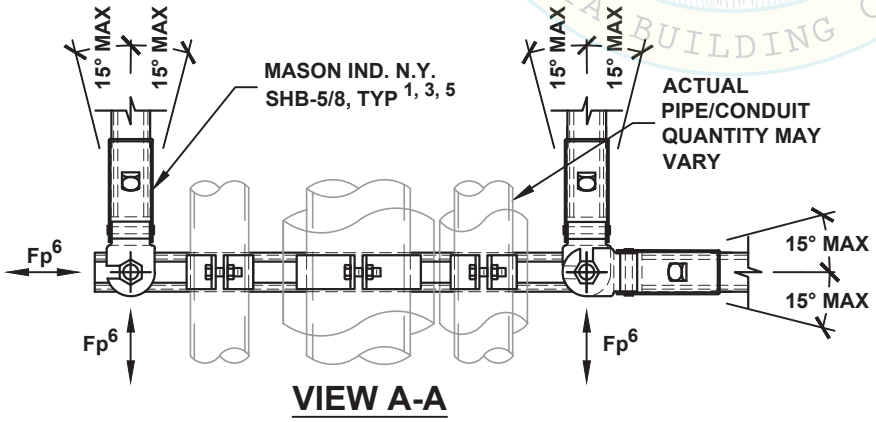

VIEW A-A

NOTES:

1. REF. SECTION A10 OR A20 FOR GENERAL NOTES.
2. PROVIDE ROD STIFFENING ONLY WHERE SEISMIC BRACKETS ARE ATTACHED TO THE ROD AND ROD LENGTH (L) EXCEEDS 31". REF. APPROPRIATE M10 PAGES FOR DETAIL.
3. REF. SECTION A15 OR A25 FOR ALTERNATE ARRANGEMENTS OF SEISMIC BRACES.
4. PROVIDE (1) 1/2" DIA. CONNECTION IN CENTER HOLE WHEN STRUT BRACE IS INSTALLED INSIDE THE BRACKET AND (2) 1/2" DIA. CONNECTIONS IN (2) OUTER HOLES WHEN THE BRACE IS INSTALLED OUTSIDE OF THE BRACKET. REF. X2.3 FOR CONNECTION DETAILS.
5. MW-KY-63 MUST BE USED ON TOP OF BOTTOM SHB WHEN STACKING (2) SHB ON THE SAME ROD. REF X2.4.
6. DESIGN PROFESSIONAL SHALL CONSIDER ECCENTRIC LOAD DISTRIBUTION WHEN DETERMINING THE Fp VALUE USED IN DESIGN.
7. REF. X8.0 - X8.1.1 FOR PIPE/CONDUIT CLAMP OPTIONS. CLAMP RATINGS MAY REDUCE MAX ALLOWABLE Fp.

OPM-0043-13
BY: Jeffrey T. Kikumoto
DATE: 06/23/2016
REVIEWED FOR CODE COMPLIANCE
CALIFORNIA BUILDING CODE

MASON WEST, INC.
1601 E. Miraloma Ave. Placentia, CA 92870
TEL (714) 630 - 0701, www.masonwest.com

Jiefu "Jeff" Zhang, SE
California SE No. S5270

PAGE
F1.35

HANGER ROD DIAMETER = ¾"	PIPING/CONDUIT TRANSVERSE TRAPEZE SEISMIC SOLID BRACING SYSTEM 150 PLF MAX	KIT OPTIONS TS20T TSH620T

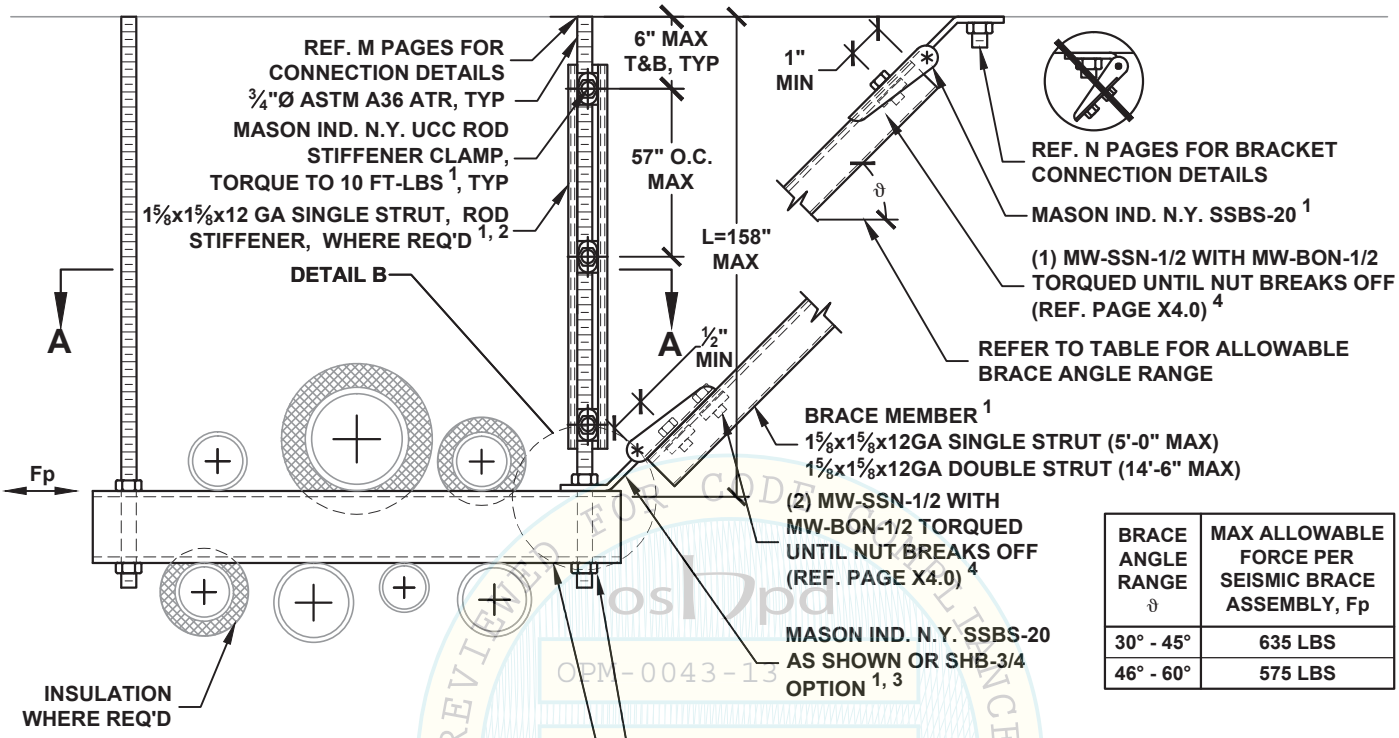

BRACE ANGLE RANGE ϑ	MAX ALLOWABLE FORCE PER SEISMIC BRACE ASSEMBLY, Fp
30° - 45°	635 LBS
46° - 60°	575 LBS

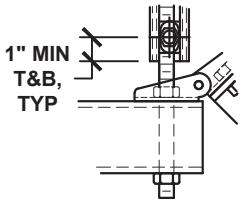

DETAIL B

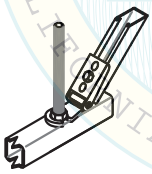

SHB OPTION

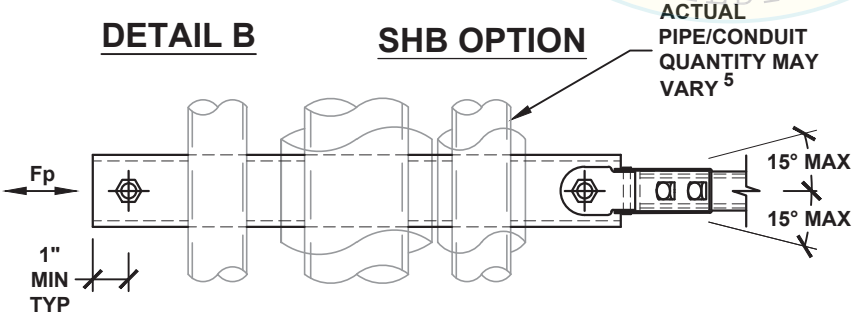

VIEW A-A

NOTES:

1. REF. SECTION A10 OR A20 FOR GENERAL NOTES.
2. PROVIDE ROD STIFFENING ONLY WHERE SEISMIC BRACKETS ARE ATTACHED TO THE ROD AND ROD LENGTH (L) EXCEEDS 37". REF. APPROPRIATE M10 PAGES FOR DETAIL.
3. REF. SECTION A15 OR A25 FOR ALTERNATE ARRANGEMENTS OF SEISMIC BRACES.
4. PROVIDE (1) 1/2" DIA. CONNECTION IN CENTER HOLE WHEN STRUT BRACE IS INSTALLED INSIDE THE BRACKET AND (2) 1/2" DIA. CONNECTIONS IN (2) OUTER HOLES WHEN THE BRACE IS INSTALLED OUTSIDE OF THE BRACKET. REF. X2.3 FOR CONNECTION DETAILS.
5. REF. SECTION A16 OR A26 FOR PIPE/CONDUIT ATTACHMENT OPTIONS.

OSHPD OPM-0043-13 BY Jeffrey Kikumoto DATE: 06/23/2016 REVIEWED FOR CODE COMPLIANCE CALIFORNIA BUILDING CODE, 2013

MASON WEST, INC.
1601 E. Miraloma Ave. Placentia, CA 92870
TEL (714) 630 - 0701, www.masonwest.com

Jiefu "Jeff" Zhang, SE
California SE No. S5270

HANGER ROD DIAMETER = ¾"

PIPING/CONDUIT LONGITUDINAL TRAPEZE SEISMIC SOLID BRACING SYSTEM 150 PLF MAX

KIT OPTIONS
TS20L
TSH620L

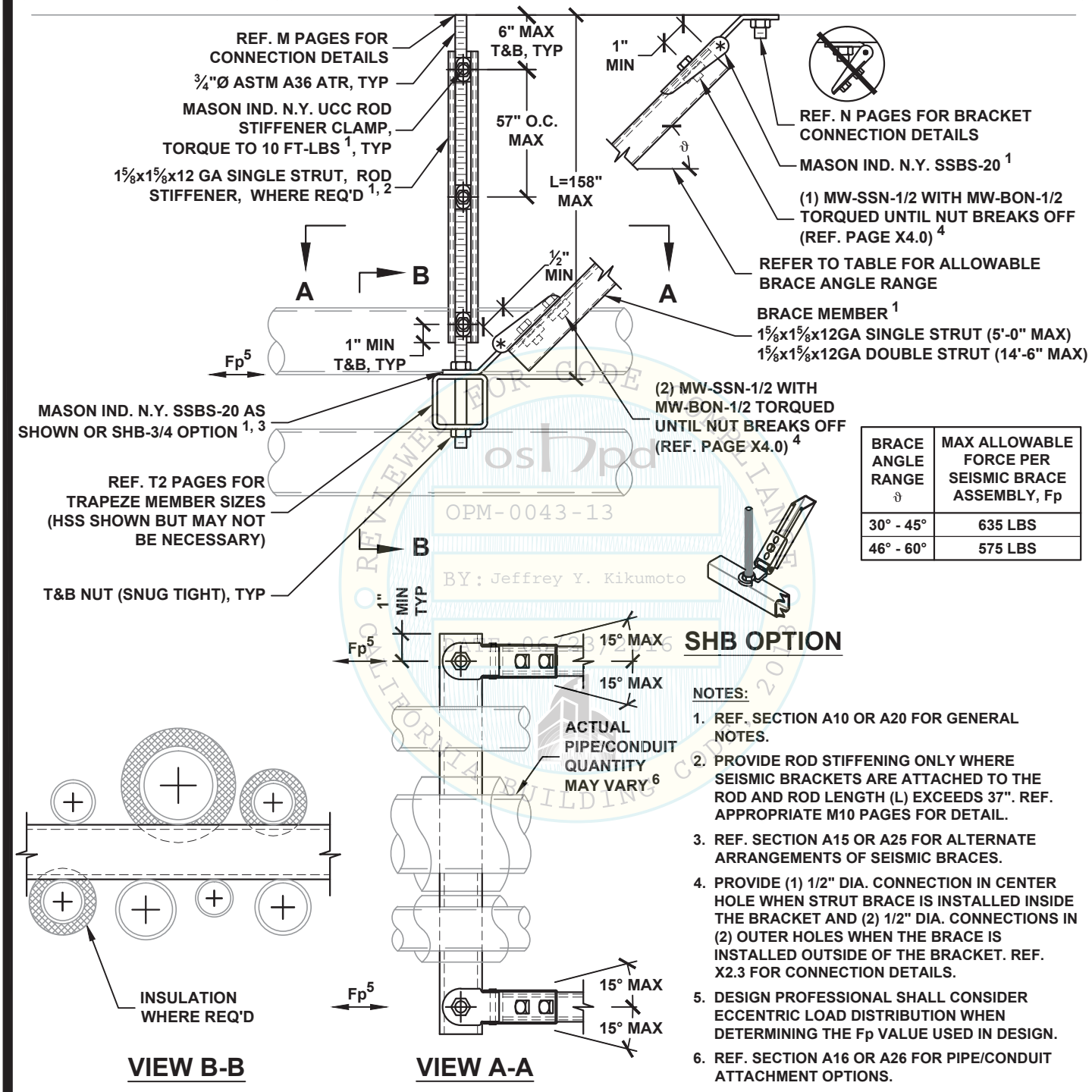

BRACE ANGLE RANGE ϑ	MAX ALLOWABLE FORCE PER SEISMIC BRACE ASSEMBLY, Fp
30° - 45°	635 LBS
46° - 60°	575 LBS

SHB OPTION

VIEW B-B

VIEW A-A

NOTES:

1. REF. SECTION A10 OR A20 FOR GENERAL NOTES.
2. PROVIDE ROD STIFFENING ONLY WHERE SEISMIC BRACKETS ARE ATTACHED TO THE ROD AND ROD LENGTH (L) EXCEEDS 37". REF. APPROPRIATE M10 PAGES FOR DETAIL.
3. REF. SECTION A15 OR A25 FOR ALTERNATE ARRANGEMENTS OF SEISMIC BRACES.
4. PROVIDE (1) 1/2" DIA. CONNECTION IN CENTER HOLE WHEN STRUT BRACE IS INSTALLED INSIDE THE BRACKET AND (2) 1/2" DIA. CONNECTIONS IN (2) OUTER HOLES WHEN THE BRACE IS INSTALLED OUTSIDE OF THE BRACKET. REF. X2.3 FOR CONNECTION DETAILS.
5. DESIGN PROFESSIONAL SHALL CONSIDER ECCENTRIC LOAD DISTRIBUTION WHEN DETERMINING THE Fp VALUE USED IN DESIGN.
6. REF. SECTION A16 OR A26 FOR PIPE/CONDUIT ATTACHMENT OPTIONS.

OSHPD OPM-0043-13 BY: Jeffrey Y. Kikumoto DATE 06/23/2016 REVIEWED FOR CODE COMPLIANCE CALIFORNIA BUILDING CODE 2013

MASON WEST, INC.
1601 E. Miraloma Ave. Placentia, CA 92870
TEL (714) 630 - 0701, www.masonwest.com

Jiefu "Jeff" Zhang, SE
California SE No. S5270

HANGER ROD DIAMETER = ¾"

PIPING/CONDUIT ALL-DIRECTIONAL TRAPEZE SEISMIC SOLID BRACING SYSTEM 150 PLF MAX

KIT OPTIONS
TS20A
TSH620A

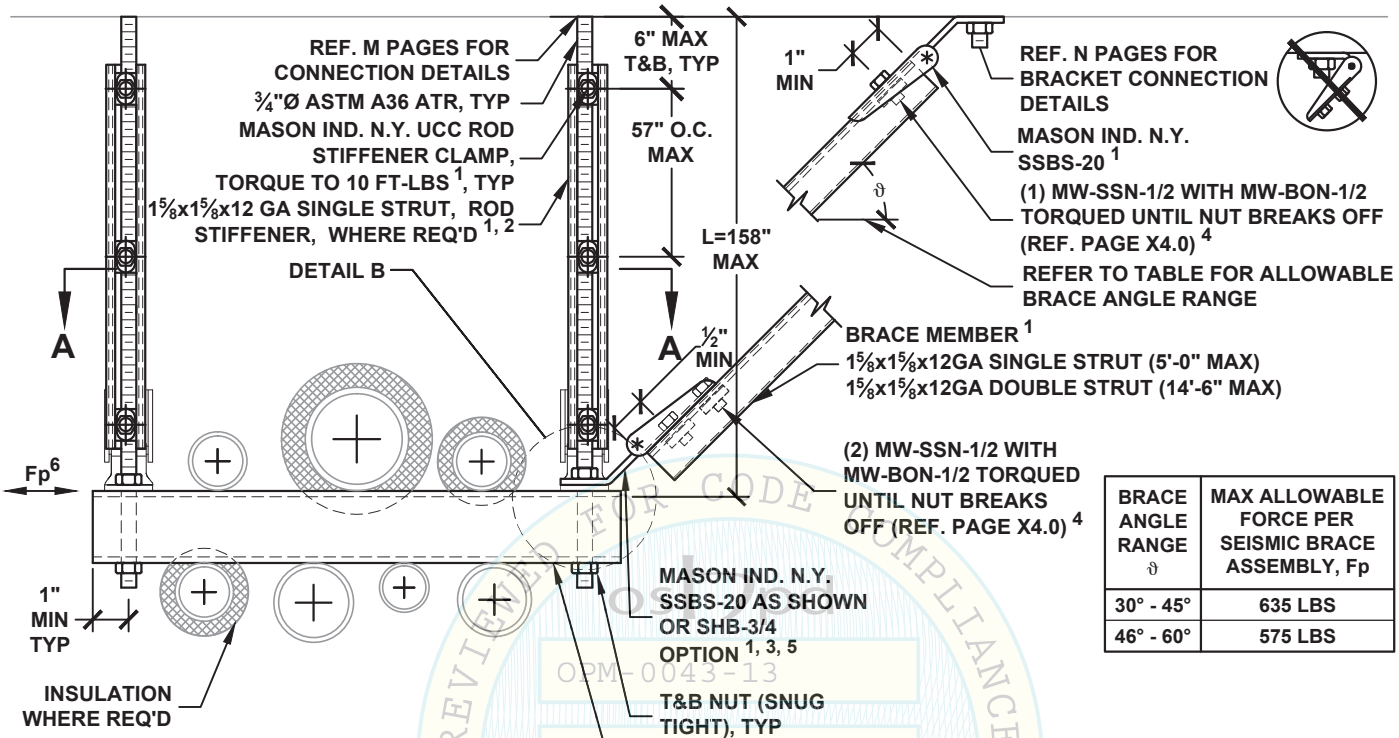

BRACE ANGLE RANGE ϑ	MAX ALLOWABLE FORCE PER SEISMIC BRACE ASSEMBLY, Fp
30° - 45°	635 LBS
46° - 60°	575 LBS

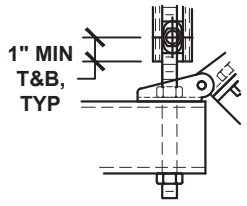

DETAIL B

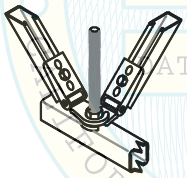

SHB OPTION

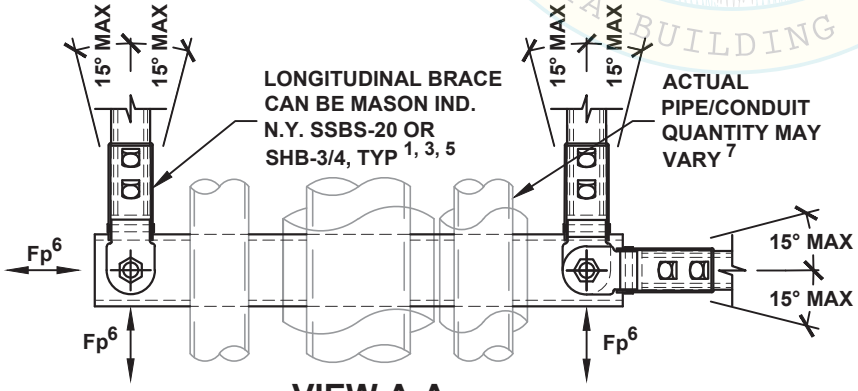

VIEW A-A

NOTES:

1. REF. SECTION A10 OR A20 FOR GENERAL NOTES.
2. PROVIDE ROD STIFFENING ONLY WHERE SEISMIC BRACKETS ARE ATTACHED TO THE ROD AND ROD LENGTH (L) EXCEEDS 37". REF. APPROPRIATE M10 PAGES FOR DETAIL.
3. REF. SECTION A15 OR A25 FOR ALTERNATE ARRANGEMENTS OF SEISMIC BRACES.
4. PROVIDE (1) 1/2" DIA. CONNECTION IN CENTER HOLE WHEN STRUT BRACE IS INSTALLED INSIDE THE BRACKET AND (2) 1/2" DIA. CONNECTIONS IN (2) OUTER HOLES WHEN THE BRACE IS INSTALLED OUTSIDE OF THE BRACKET. REF. X2.3 FOR CONNECTION DETAILS.
5. MW-KY-75 MUST BE USED ON TOP OF BOTTOM SHB WHEN STACKING (2) SHB ON THE SAME ROD. REF X2.4.
6. DESIGN PROFESSIONAL SHALL CONSIDER ECCENTRIC LOAD DISTRIBUTION WHEN DETERMINING THE Fp VALUE USED IN DESIGN.
7. REF. SECTION A16 OR A26 FOR PIPE/CONDUIT ATTACHMENT OPTIONS.

OSHPD REVIEWED FOR CODE COMPLIANCE OPM-0043-13 BY: Jeffrey Y. Kikumoto DATE: 06/23/2016 CALIFORNIA BUILDING CODE 2013

MASON WEST, INC.
1601 E. Miraloma Ave. Placentia, CA 92870
TEL (714) 630 - 0701, www.masonwest.com

Jiefu "Jeff" Zhang, SE
California SE No. S5270

PAGE
F1.42

HANGER ROD DIAMETER = ¾"

PIPING/CONDUIT TRANSVERSE TRAPEZE SEISMIC SOLID BRACING SYSTEM 150 PLF MAX

KIT OPTIONS
TSH6T
TSH65T

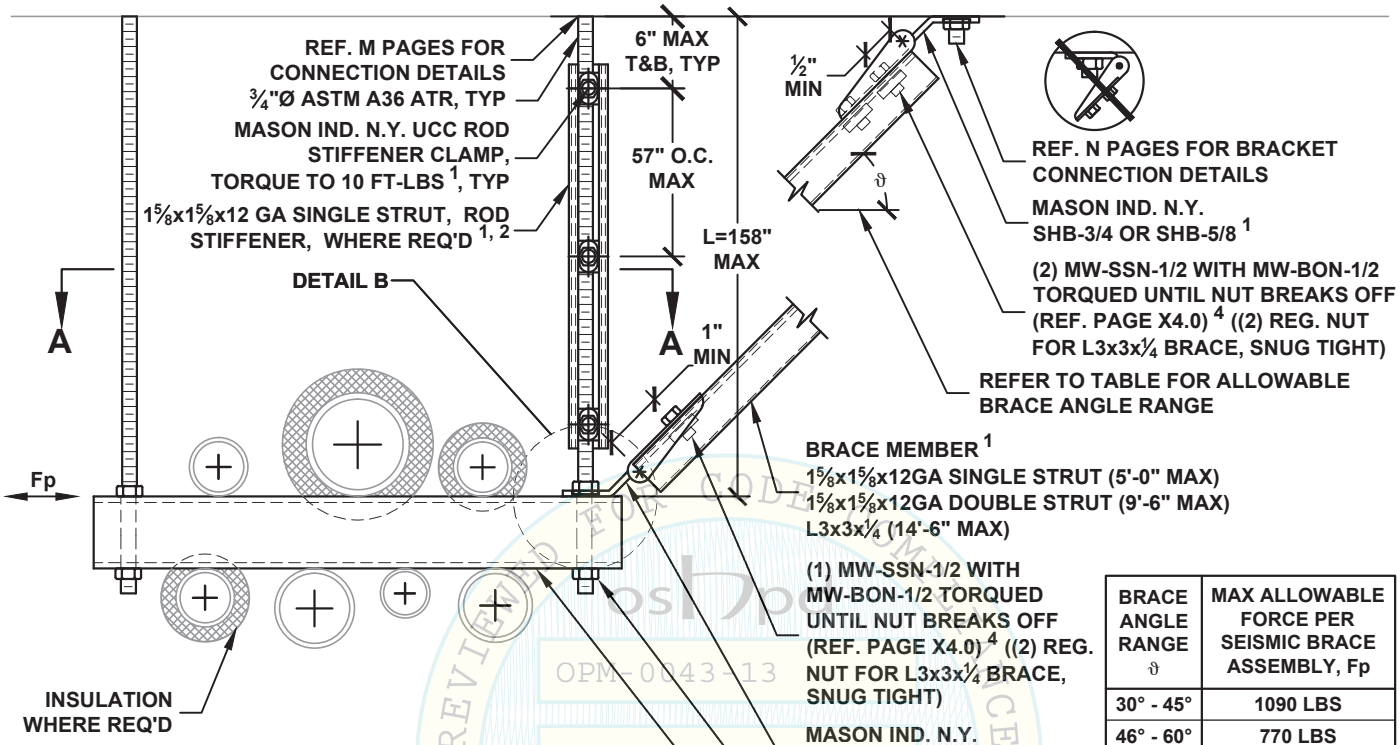

BRACE ANGLE RANGE ϑ	MAX ALLOWABLE FORCE PER SEISMIC BRACE ASSEMBLY, Fp
30° - 45°	1090 LBS
46° - 60°	770 LBS

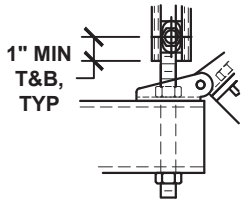

DETAIL B

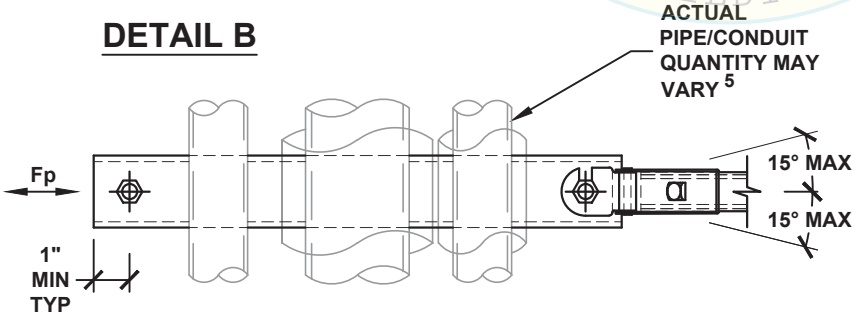

VIEW A-A

NOTES:

1. REF. SECTION A10 OR A20 FOR GENERAL NOTES.
2. PROVIDE ROD STIFFENING ONLY WHERE SEISMIC BRACKETS ARE ATTACHED TO THE ROD AND ROD LENGTH (L) EXCEEDS 37". REF. APPROPRIATE M10 PAGES FOR DETAIL.
3. REF. SECTION A15 OR A25 FOR ALTERNATE ARRANGEMENTS OF SEISMIC BRACES.
4. PROVIDE (1) 1/2" DIA. CONNECTION IN CENTER HOLE WHEN STRUT BRACE IS INSTALLED INSIDE THE BRACKET AND (2) 1/2" DIA. CONNECTIONS IN (2) OUTER HOLES WHEN THE BRACE IS INSTALLED OUTSIDE OF THE BRACKET. REF. X2.3 FOR CONNECTION DETAILS.
5. REF. SECTION A16 OR A26 FOR PIPE/CONDUIT ATTACHMENT OPTIONS.

OSHPD OPM-0043-13 BY: Jeffrey T. Kikumoto DATE: 06/23/2016 REVIEWED FOR CODE COMPLIANCE CALIFORNIA BUILDING CODE

MASON WEST, INC.
1601 E. Miraloma Ave. Placentia, CA 92870
TEL (714) 630 - 0701, www.masonwest.com

Jiefu "Jeff" Zhang, SE
California SE No. S5270

PAGE
F1.43

HANGER ROD DIAMETER = ¾"

PIPING/CONDUIT LONGITUDINAL TRAPEZE SEISMIC SOLID BRACING SYSTEM 150 PLF MAX

KIT OPTIONS
TSH6L
TSH65L

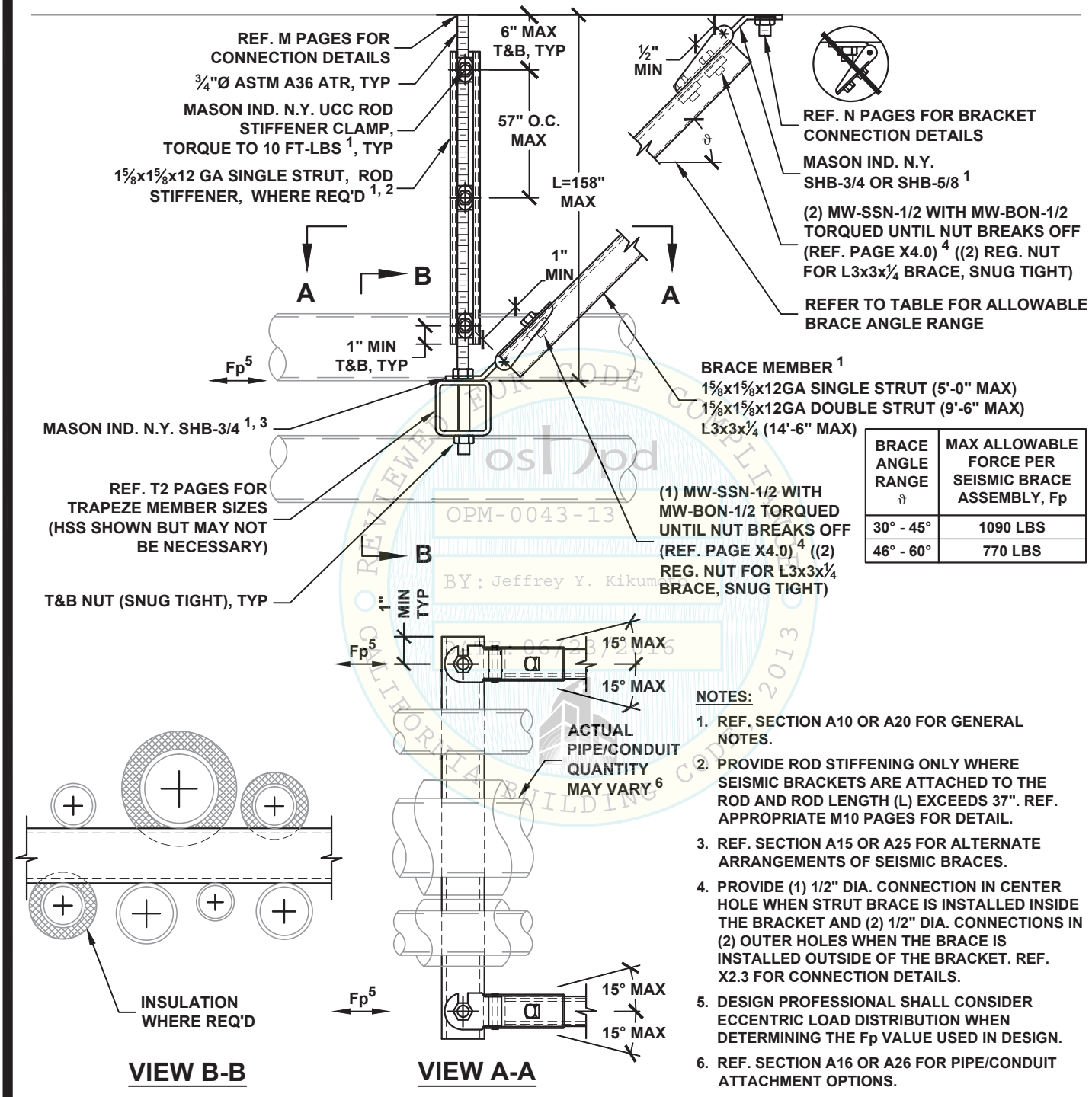

BRACE ANGLE RANGE ϑ	MAX ALLOWABLE FORCE PER SEISMIC BRACE ASSEMBLY, Fp
30° - 45°	1090 LBS
46° - 60°	770 LBS

NOTES:

1. REF. SECTION A10 OR A20 FOR GENERAL NOTES.
2. PROVIDE ROD STIFFENING ONLY WHERE SEISMIC BRACKETS ARE ATTACHED TO THE ROD AND ROD LENGTH (L) EXCEEDS 37". REF. APPROPRIATE M10 PAGES FOR DETAIL.
3. REF. SECTION A15 OR A25 FOR ALTERNATE ARRANGEMENTS OF SEISMIC BRACES.
4. PROVIDE (1) 1/2" DIA. CONNECTION IN CENTER HOLE WHEN STRUT BRACE IS INSTALLED INSIDE THE BRACKET AND (2) 1/2" DIA. CONNECTIONS IN (2) OUTER HOLES WHEN THE BRACE IS INSTALLED OUTSIDE OF THE BRACKET. REF. X2.3 FOR CONNECTION DETAILS.
5. DESIGN PROFESSIONAL SHALL CONSIDER ECCENTRIC LOAD DISTRIBUTION WHEN DETERMINING THE Fp VALUE USED IN DESIGN.
6. REF. SECTION A16 OR A26 FOR PIPE/CONDUIT ATTACHMENT OPTIONS.

OPM-0043-13
BY: Jeffrey Y. Kikumoto
2013 CALIFORNIA BUILDING CODE

MASON WEST, INC.
1601 E. Miraloma Ave. Placentia, CA 92870
TEL (714) 630 - 0701, www.masonwest.com

Jiefu "Jeff" Zhang, SE
California SE No. S5270

PAGE
F1.44

HANGER ROD DIAMETER = ¾"

PIPING/CONDUIT ALL-DIRECTIONAL TRAPEZE SEISMIC SOLID BRACING SYSTEM 150 PLF MAX

KIT OPTIONS
TSH6A
TSH65A

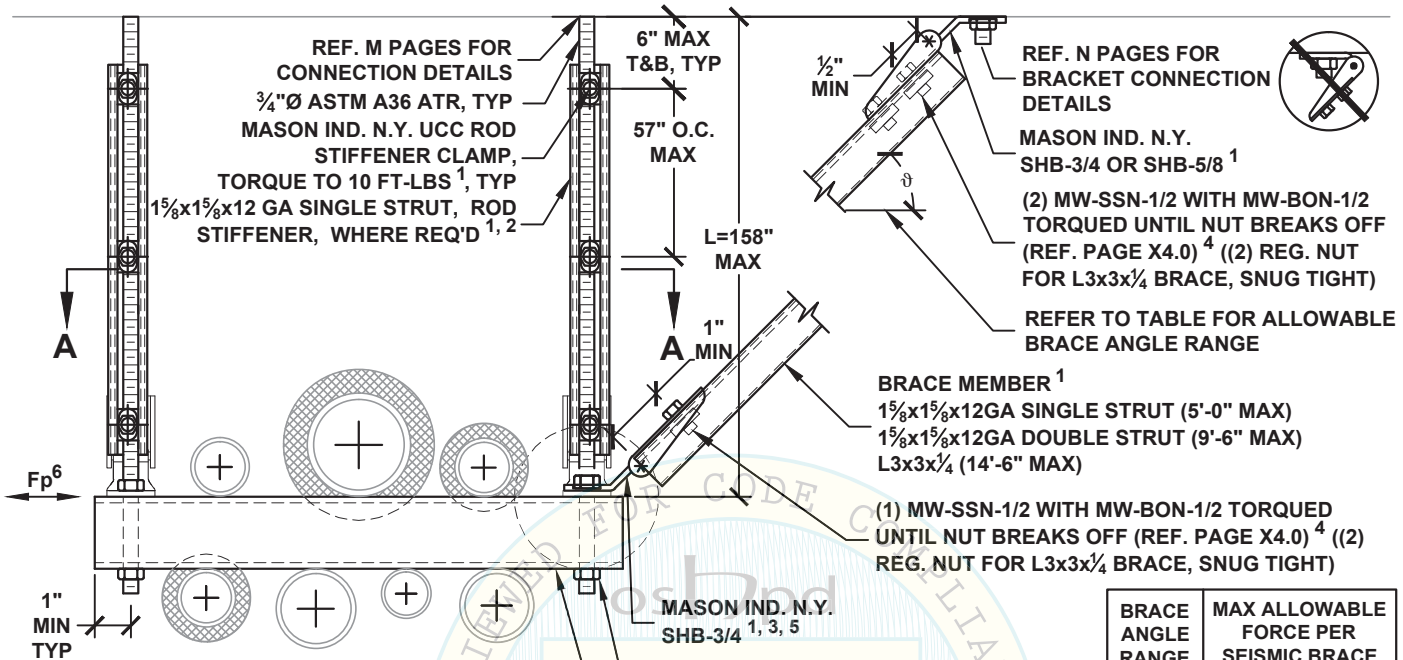

BRACE ANGLE RANGE ϑ	MAX ALLOWABLE FORCE PER SEISMIC BRACE ASSEMBLY, Fp
30° - 45°	1090 LBS
46° - 60°	670 LBS

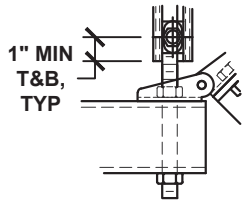

DETAIL B

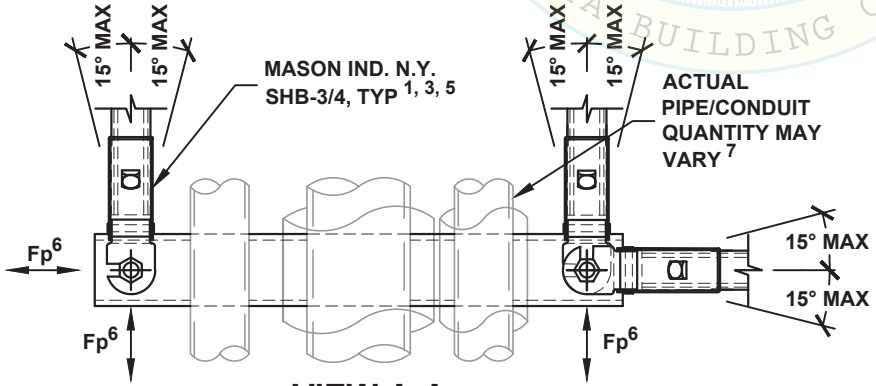

VIEW A-A

NOTES:

1. REF. SECTION A10 OR A20 FOR GENERAL NOTES.
2. PROVIDE ROD STIFFENING ONLY WHERE SEISMIC BRACKETS ARE ATTACHED TO THE ROD AND ROD LENGTH (L) EXCEEDS 37". REF. APPROPRIATE M10 PAGES FOR DETAIL.
3. REF. SECTION A15 OR A25 FOR ALTERNATE ARRANGEMENTS OF SEISMIC BRACES.
4. PROVIDE (1) 1/2" DIA. CONNECTION IN CENTER HOLE WHEN STRUT BRACE IS INSTALLED INSIDE THE BRACKET AND (2) 1/2" DIA. CONNECTIONS IN (2) OUTER HOLES WHEN THE BRACE IS INSTALLED OUTSIDE OF THE BRACKET. REF. X2.3 FOR CONNECTION DETAILS.
5. MW-KY-75 MUST BE USED ON TOP OF BOTTOM SHB WHEN STACKING (2) SHB ON THE SAME ROD. REF X2.4.
6. DESIGN PROFESSIONAL SHALL CONSIDER ECCENTRIC LOAD DISTRIBUTION WHEN DETERMINING THE Fp VALUE USED IN DESIGN.
7. REF. SECTION A16 OR A26 FOR PIPE/CONDUIT ATTACHMENT OPTIONS.

OSHPD OPM-0043-13 BY: Jeffrey Y. Kikumoto DATE: 06/23/2016 REVIEWED FOR CODE COMPLIANCE CALIFORNIA BUILDING CODE 2013

MASON WEST, INC.
1601 E. Miraloma Ave. Placentia, CA 92870
TEL (714) 630 - 0701, www.masonwest.com

Jiefu "Jeff" Zhang, SE
California SE No. S5270

PAGE
F1.45

HANGER ROD DIAMETER = ¾"	PIPING/CONDUIT TRANSVERSE TRAPEZE SEISMIC SOLID BRACING SYSTEM 300 PLF MAX	KIT OPTIONS TS3T

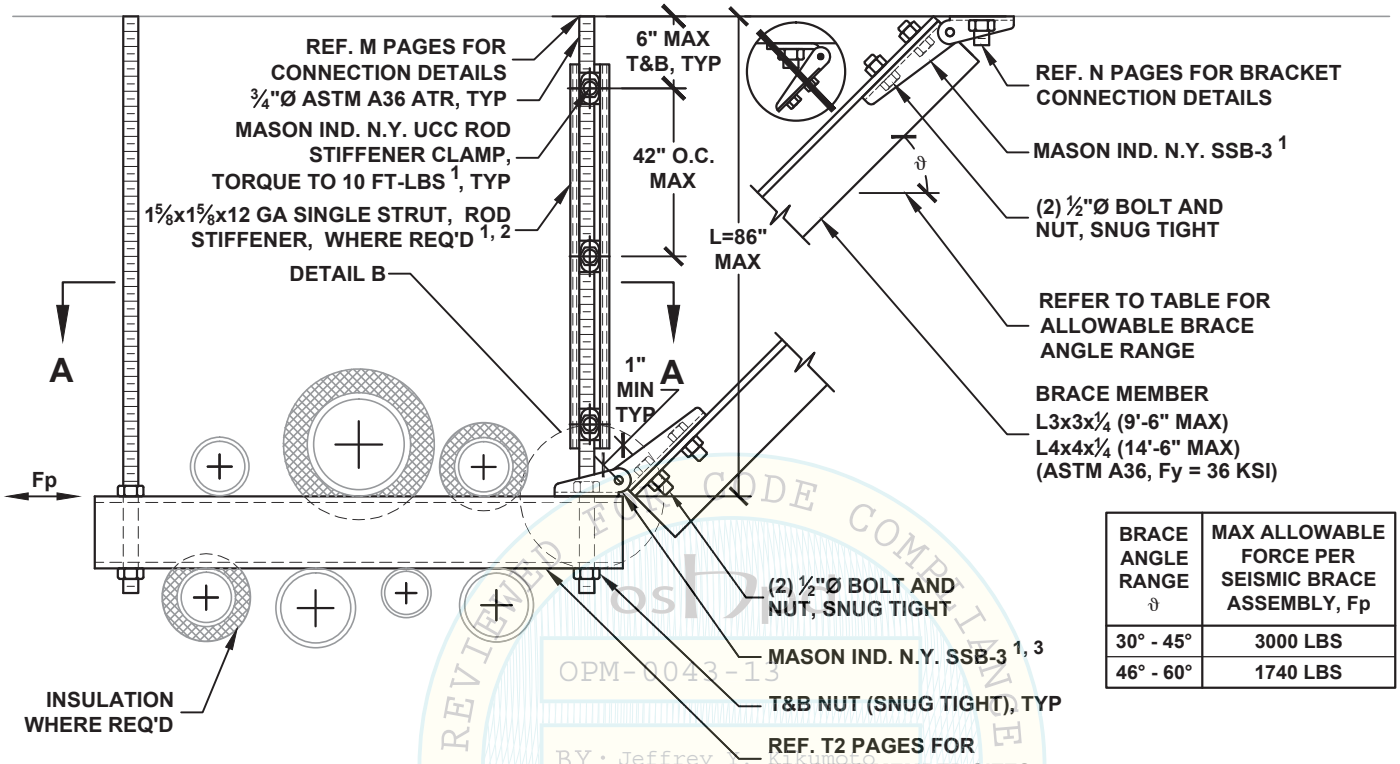

BRACE ANGLE RANGE ϑ	MAX ALLOWABLE FORCE PER SEISMIC BRACE ASSEMBLY, Fp
30° - 45°	3000 LBS
46° - 60°	1740 LBS

REVIEWED FOR CODE COMPLIANCE
CALIFORNIA BUILDING CODE, 2013
OPM-0043-13
BY: Jeffrey K.
DATE: 06/23/2016

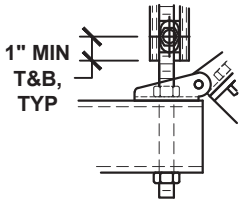

DETAIL B

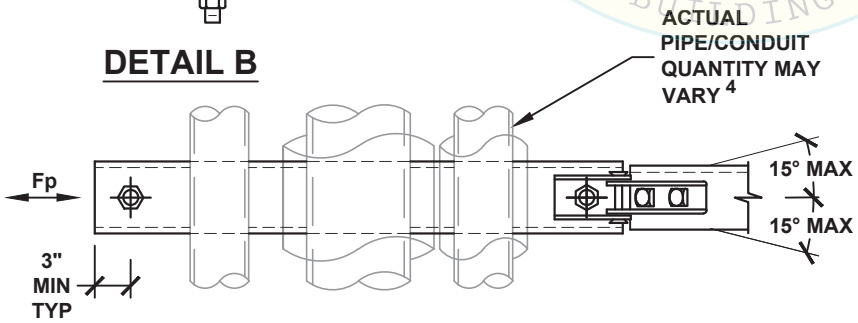

VIEW A-A

NOTES:

1. REF. SECTION A10 OR A20 FOR GENERAL NOTES.
2. PROVIDE ROD STIFFENING ONLY WHERE SEISMIC BRACKETS ARE ATTACHED TO THE ROD AND ROD LENGTH (L) EXCEEDS 27". REF. APPROPRIATE M10 PAGES FOR DETAIL.
3. REF. SECTION A15 OR A25 FOR ALTERNATE ARRANGEMENTS OF SEISMIC BRACES.
4. REF. SECTION A16 OR A26 FOR PIPE/CONDUIT ATTACHMENT OPTIONS.

MASON WEST, INC.
1601 E. Miraloma Ave. Placentia, CA 92870
TEL (714) 630 - 0701, www.masonwest.com

Jiefu "Jeff" Zhang, SE
California SE No. S5270

PAGE
F1.50

HANGER ROD DIAMETER = ¾"	PIPING/CONDUIT LONGITUDINAL TRAPEZE SEISMIC SOLID BRACING SYSTEM 300 PLF MAX	KIT OPTIONS TS3L

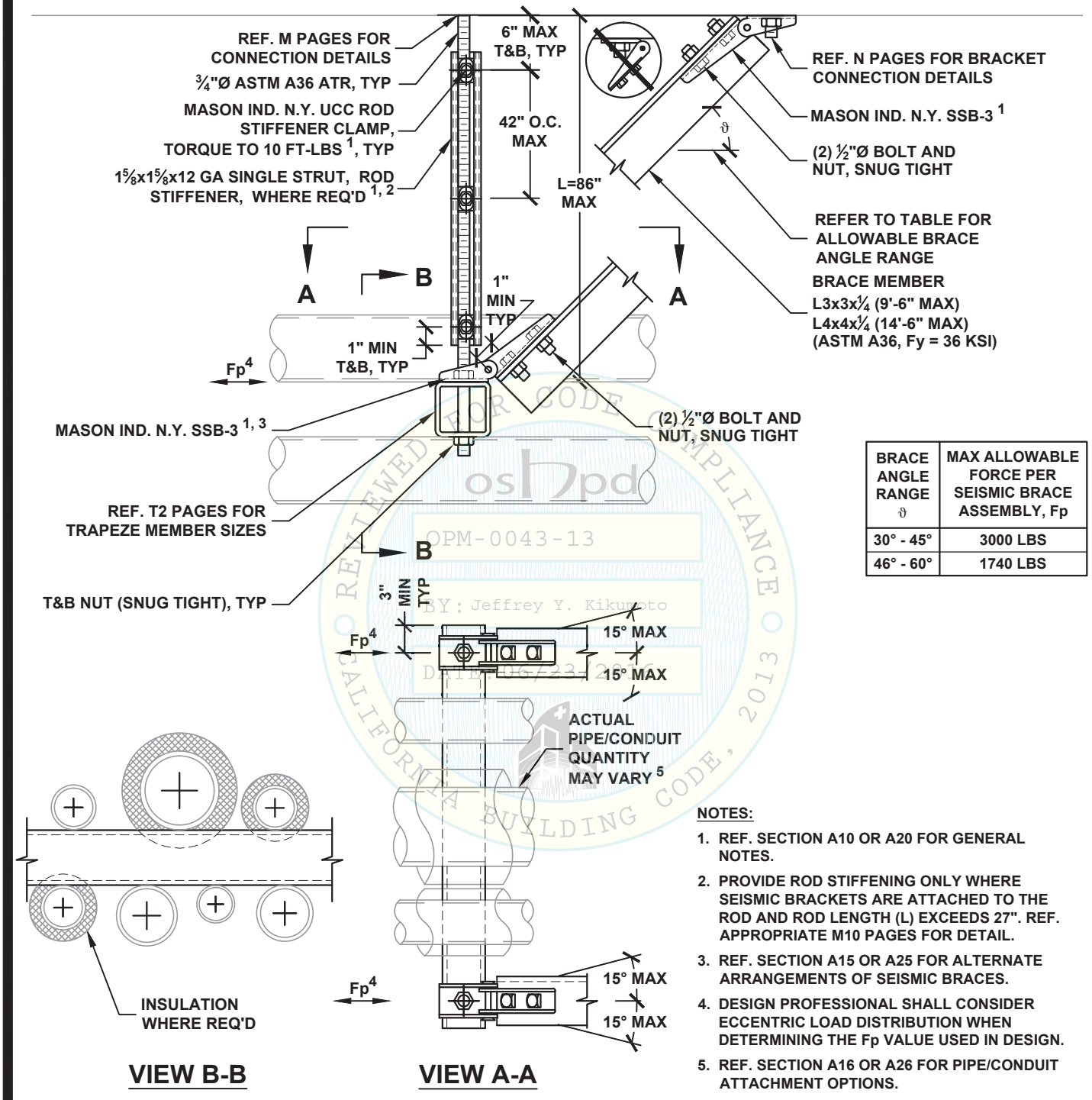

BRACE ANGLE RANGE ϑ	MAX ALLOWABLE FORCE PER SEISMIC BRACE ASSEMBLY, Fp
30° - 45°	3000 LBS
46° - 60°	1740 LBS

VIEW B-B **VIEW A-A**

NOTES:

1. REF. SECTION A10 OR A20 FOR GENERAL NOTES.
2. PROVIDE ROD STIFFENING ONLY WHERE SEISMIC BRACKETS ARE ATTACHED TO THE ROD AND ROD LENGTH (L) EXCEEDS 27". REF. APPROPRIATE M10 PAGES FOR DETAIL.
3. REF. SECTION A15 OR A25 FOR ALTERNATE ARRANGEMENTS OF SEISMIC BRACES.
4. DESIGN PROFESSIONAL SHALL CONSIDER ECCENTRIC LOAD DISTRIBUTION WHEN DETERMINING THE Fp VALUE USED IN DESIGN.
5. REF. SECTION A16 OR A26 FOR PIPE/CONDUIT ATTACHMENT OPTIONS.

OSHPD OPM-0043-13 BY: Jeffrey Y. Kikumoto DATE: 06/23/2016 REVIEWED FOR CODE COMPLIANCE CALIFORNIA BUILDING CODE, 2013

MASON WEST, INC.
1601 E. Miraloma Ave. Placentia, CA 92870
TEL (714) 630 - 0701, www.masonwest.com

Jiefu "Jeff" Zhang, SE
California SE No. S5270

PAGE **F1.51**

HANGER ROD DIAMETER = ¾"	PIPING/CONDUIT ALL-DIRECTIONAL TRAPEZE SEISMIC SOLID BRACING SYSTEM 300 PLF MAX	KIT OPTIONS TS3A

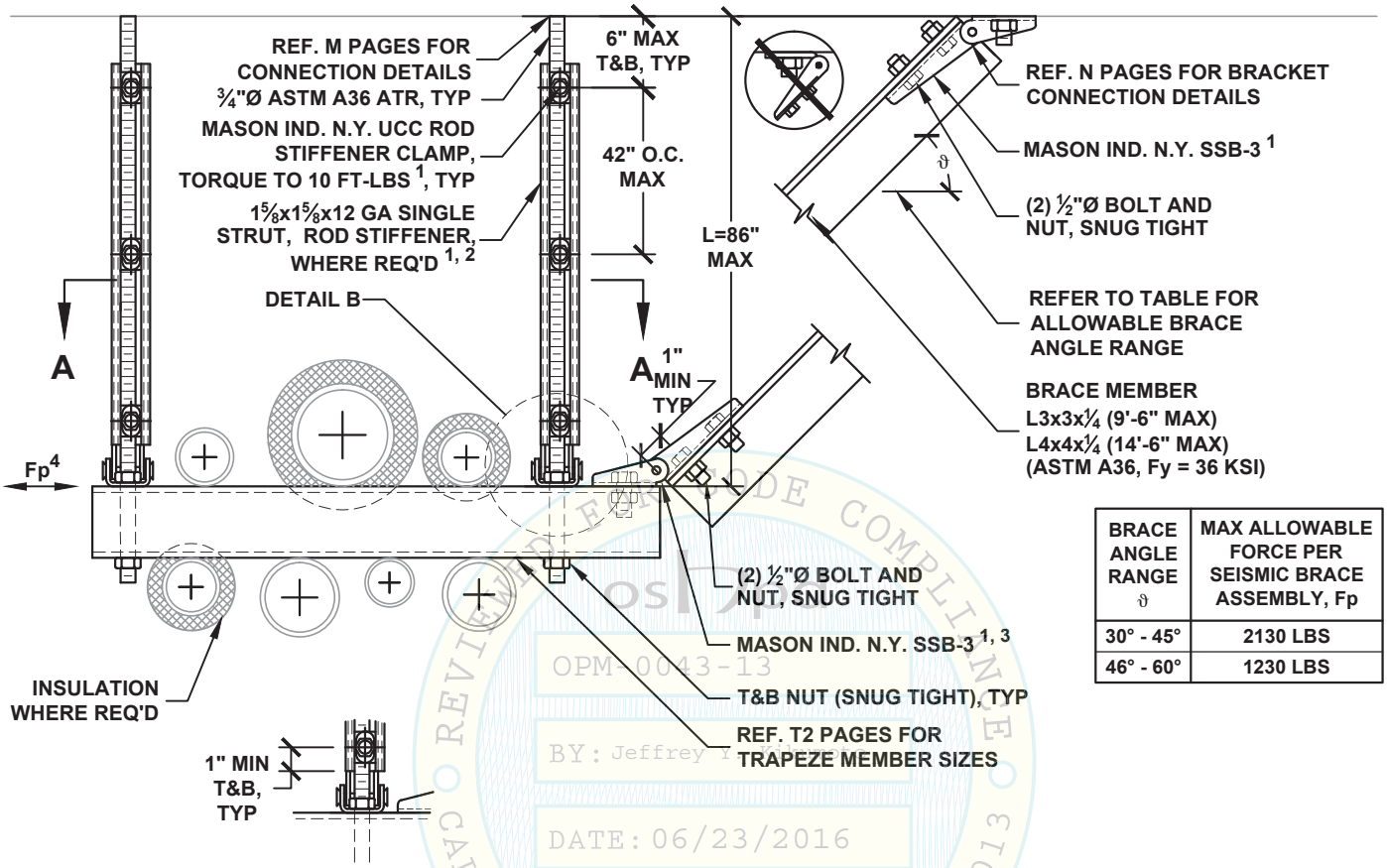

BRACE ANGLE RANGE ϑ	MAX ALLOWABLE FORCE PER SEISMIC BRACE ASSEMBLY, Fp
30° - 45°	2130 LBS
46° - 60°	1230 LBS

DETAIL B

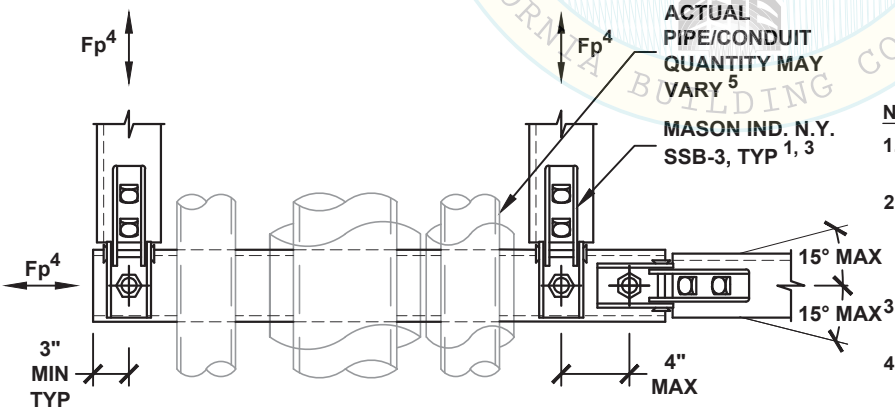

VIEW A-A

NOTES:

1. REF. SECTION A10 OR A20 FOR GENERAL NOTES.
2. PROVIDE ROD STIFFENING ONLY WHERE SEISMIC BRACKETS ARE ATTACHED TO THE ROD AND ROD LENGTH (L) EXCEEDS 27". REF. APPROPRIATE M10 PAGES FOR DETAIL.
3. REF. SECTION A15 OR A25 FOR ALTERNATE ARRANGEMENTS OF SEISMIC BRACES.
4. DESIGN PROFESSIONAL SHALL CONSIDER ECCENTRIC LOAD DISTRIBUTION WHEN DETERMINING THE Fp VALUE USED IN DESIGN.
5. REF. SECTION A16 OR A26 FOR PIPE/CONDUIT ATTACHMENT OPTIONS.

OSHPD
OPM-0043-13
BY: Jeffrey Kikumoto
DATE: 06/23/2016
REVIEWED FOR CODE COMPLIANCE
CALIFORNIA BUILDING CODE, 2013

MASON WEST, INC.
1601 E. Miraloma Ave. Placentia, CA 92870
TEL (714) 630 - 0701, www.masonwest.com

Jiefu "Jeff" Zhang, SE
California SE No. S5270

PAGE
F1.52

HANGER ROD DIAMETER = ¾"	PIPING/CONDUIT TRANSVERSE TRAPEZE SEISMIC SOLID BRACING SYSTEM 300 PLF MAX	KIT OPTIONS TS3T

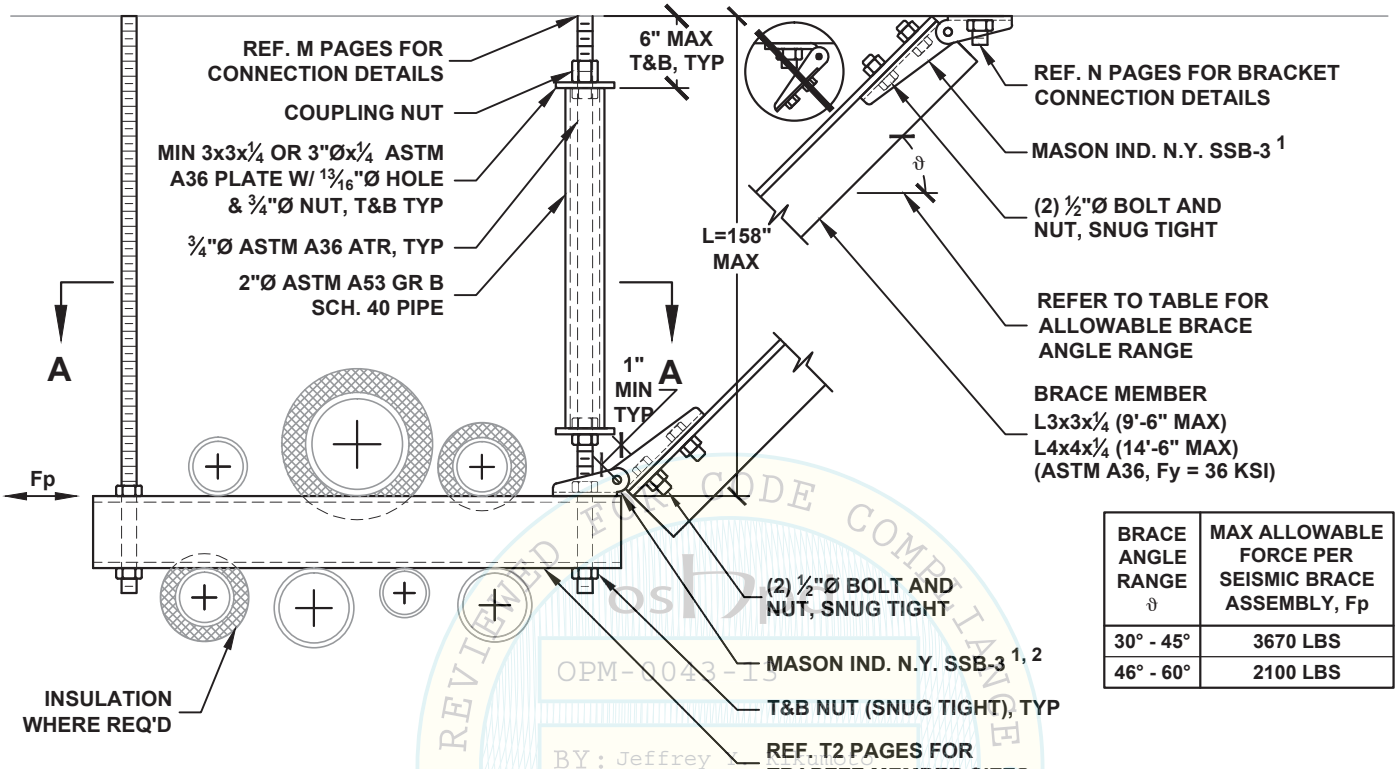

BRACE ANGLE RANGE ϑ	MAX ALLOWABLE FORCE PER SEISMIC BRACE ASSEMBLY, Fp
30° - 45°	3670 LBS
46° - 60°	2100 LBS

REVIEWED FOR CODE COMPLIANCE
CALIFORNIA BUILDING CODE, 2013
OSHPD
OPM-0043-13
BY: Jeffrey K
DATE: 06/23/2016

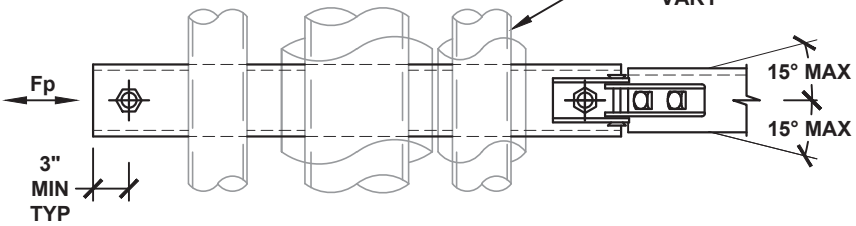

VIEW A-A

NOTES:

1. REF. SECTION A10 OR A20 FOR GENERAL NOTES.
2. REF. SECTION A15 OR A25 FOR ALTERNATE ARRANGEMENTS OF SEISMIC BRACES.
3. REF. SECTION A16 OR A26 FOR PIPE/CONDUIT ATTACHMENT OPTIONS.

MASON WEST, INC.
1601 E. Miraloma Ave. Placentia, CA 92870
TEL (714) 630 - 0701, www.masonwest.com

Jiefu "Jeff" Zhang, SE
California SE No. S5270

PAGE
F1.53

HANGER ROD DIAMETER = ¾"	PIPING/CONDUIT LONGITUDINAL TRAPEZE SEISMIC SOLID BRACING SYSTEM 300 PLF MAX	KIT OPTIONS TS3L

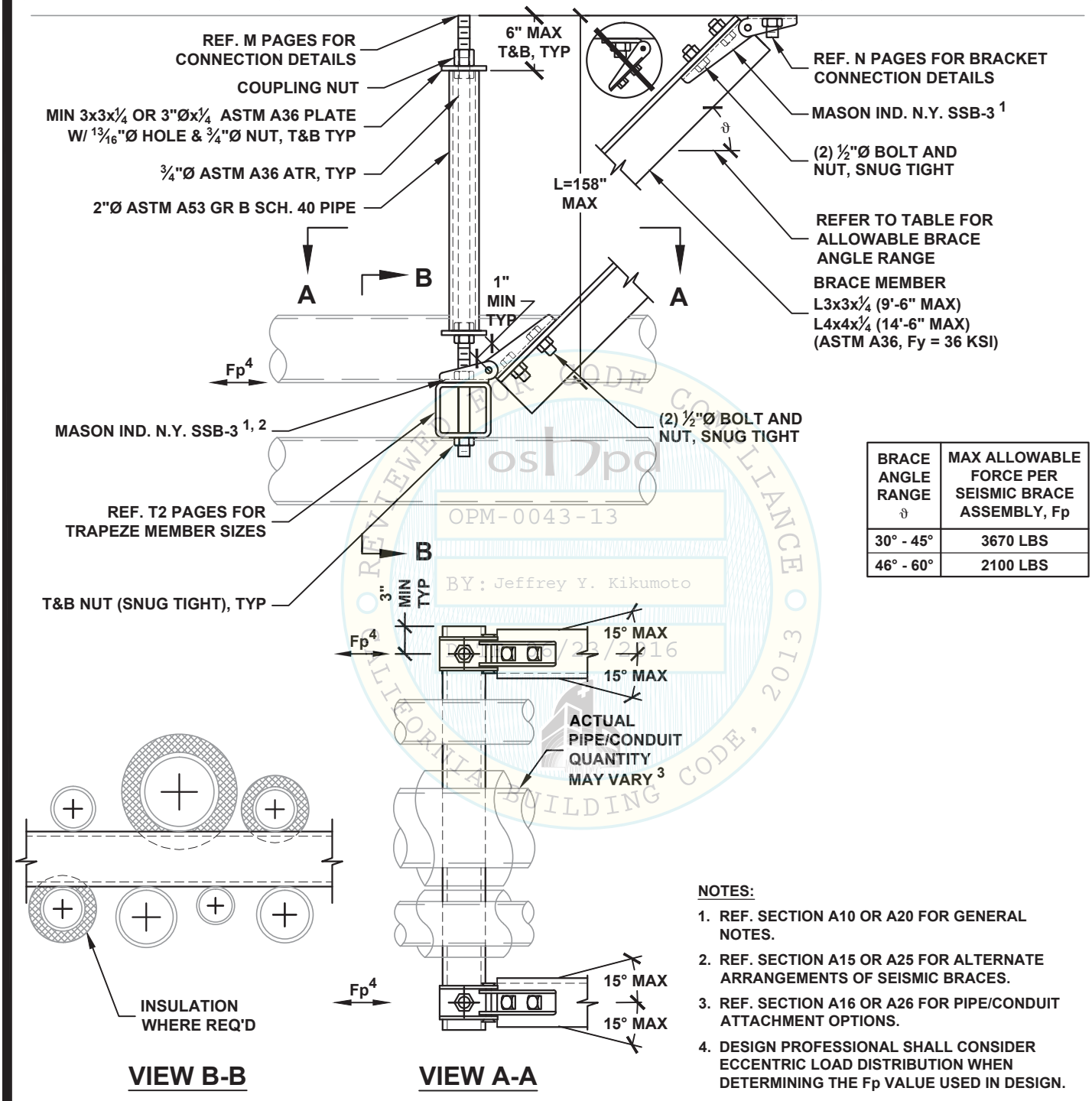

BRACE ANGLE RANGE ϑ	MAX ALLOWABLE FORCE PER SEISMIC BRACE ASSEMBLY, Fp
30° - 45°	3670 LBS
46° - 60°	2100 LBS

OSHPD
OPM-0043-13
BY: Jeffrey Y. Kikumoto
6/23/2016
REVIEWED FOR CODE COMPLIANCE
CALIFORNIA BUILDING CODE, 2013

NOTES:

1. REF. SECTION A10 OR A20 FOR GENERAL NOTES.
2. REF. SECTION A15 OR A25 FOR ALTERNATE ARRANGEMENTS OF SEISMIC BRACES.
3. REF. SECTION A16 OR A26 FOR PIPE/CONDUIT ATTACHMENT OPTIONS.
4. DESIGN PROFESSIONAL SHALL CONSIDER ECCENTRIC LOAD DISTRIBUTION WHEN DETERMINING THE Fp VALUE USED IN DESIGN.

MASON WEST, INC.
1601 E. Miraloma Ave. Placentia, CA 92870
TEL (714) 630 - 0701, www.masonwest.com

Jiefu "Jeff" Zhang, SE
California SE No. S5270

HANGER ROD DIAMETER = ¾"

PIPING/CONDUIT ALL-DIRECTIONAL TRAPEZE SEISMIC SOLID BRACING SYSTEM 300 PLF MAX

KIT OPTIONS
TS3A

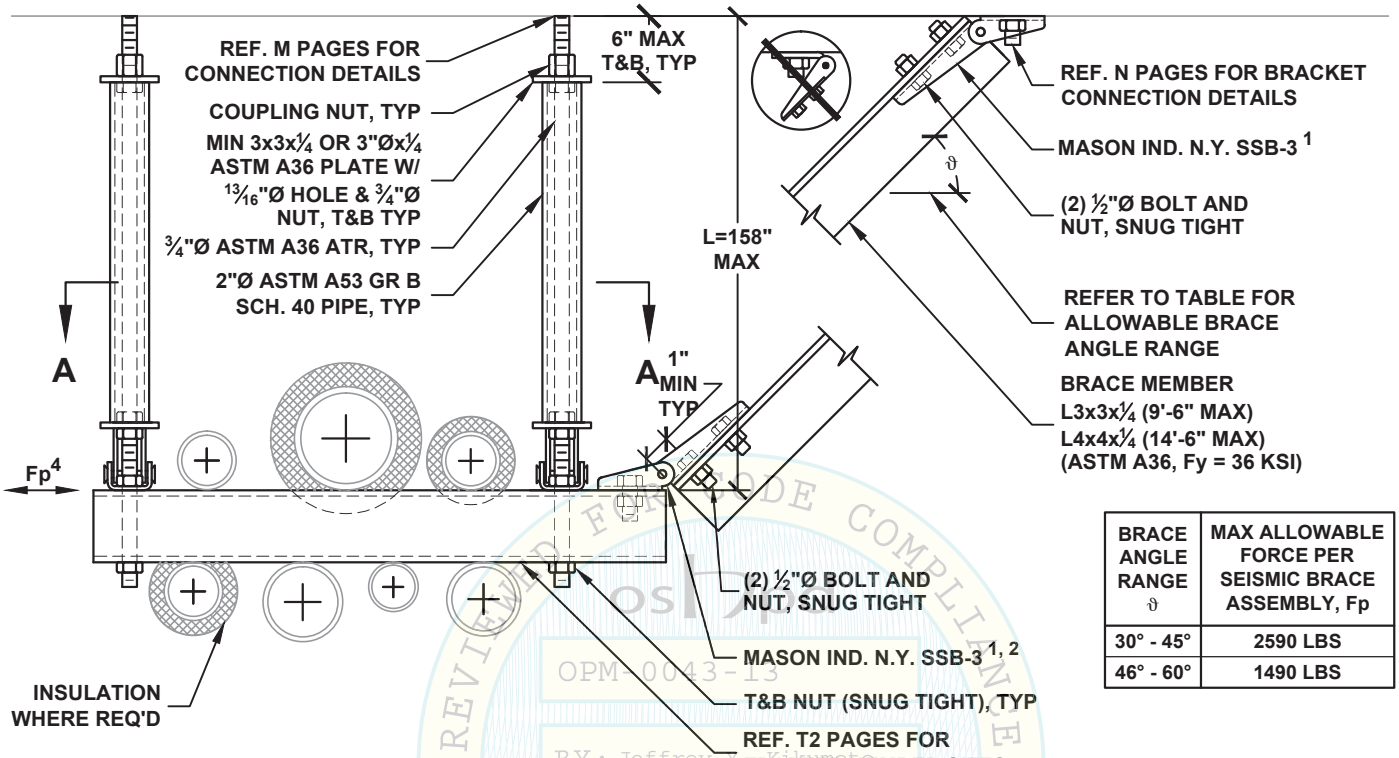

BRACE ANGLE RANGE ϑ	MAX ALLOWABLE FORCE PER SEISMIC BRACE ASSEMBLY, Fp
30° - 45°	2590 LBS
46° - 60°	1490 LBS

OSHPD
OPM-0043-13
BY: Jeffrey Kikumoto
DATE: 06/23/2016
REVIEWED FOR CODE COMPLIANCE
CALIFORNIA BUILDING CODE, 2013

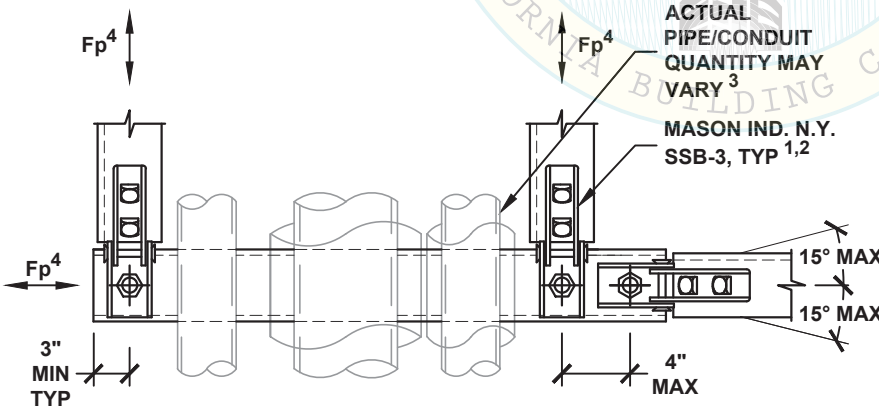

VIEW A-A

NOTES:

1. REF. SECTION A10 OR A20 FOR GENERAL NOTES.
2. REF. SECTION A15 OR A25 FOR ALTERNATE ARRANGEMENTS OF SEISMIC BRACES.
3. REF. SECTION A16 OR A26 FOR PIPE/CONDUIT ATTACHMENT OPTIONS.
4. DESIGN PROFESSIONAL SHALL CONSIDER ECCENTRIC LOAD DISTRIBUTION WHEN DETERMINING THE Fp VALUE USED IN DESIGN.

MASON WEST, INC.
1601 E. Miraloma Ave. Placentia, CA 92870
TEL (714) 630 - 0701, www.masonwest.com

Jiefu "Jeff" Zhang, SE
California SE No. S5270

PAGE
F1.55

HANGER ROD DIAMETER = 1"

PIPING/CONDUIT TRANSVERSE TRAPEZE SEISMIC SOLID BRACING SYSTEM 500 PLF MAX

KIT OPTIONS
TS4T

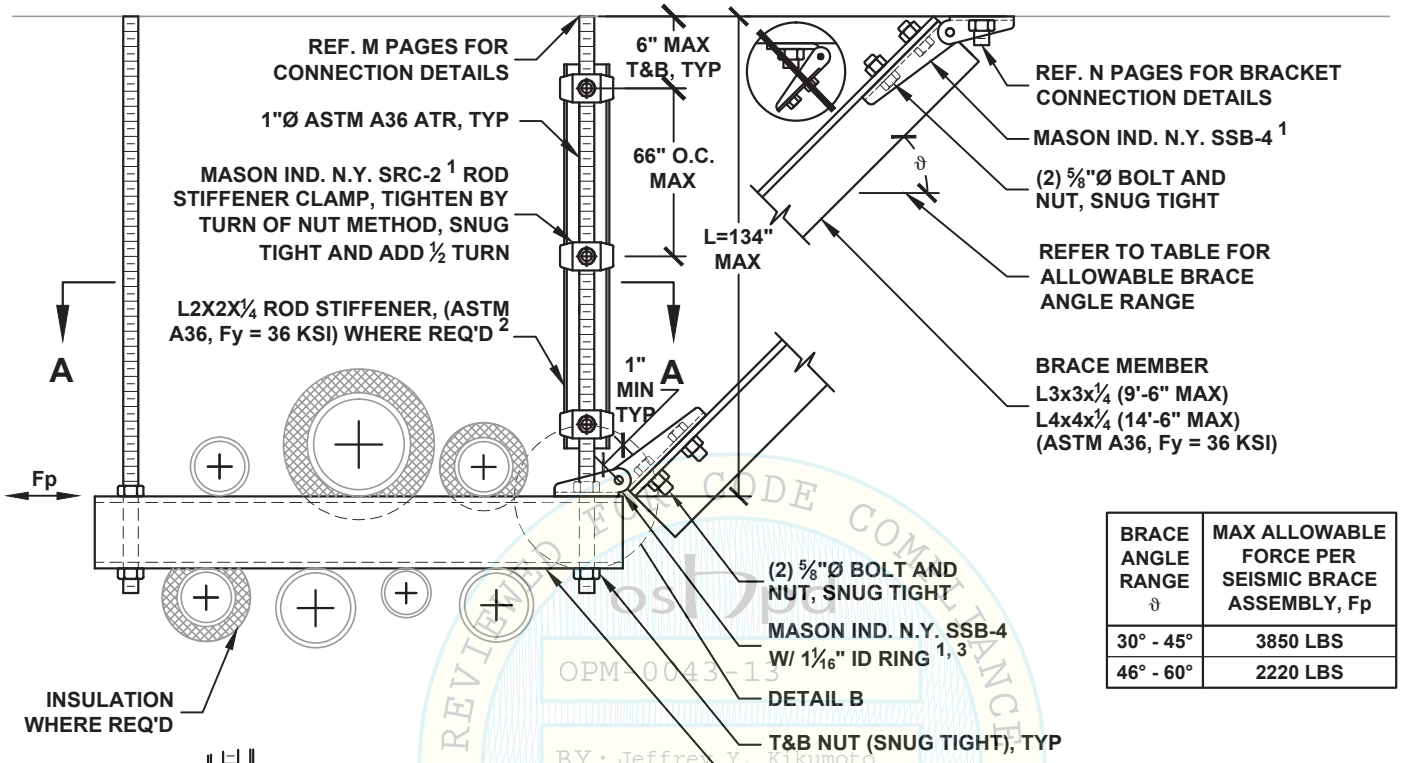

BRACE ANGLE RANGE ϑ	MAX ALLOWABLE FORCE PER SEISMIC BRACE ASSEMBLY, Fp
30° - 45°	3850 LBS
46° - 60°	2220 LBS

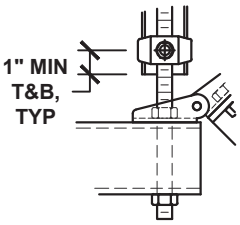

DETAIL B

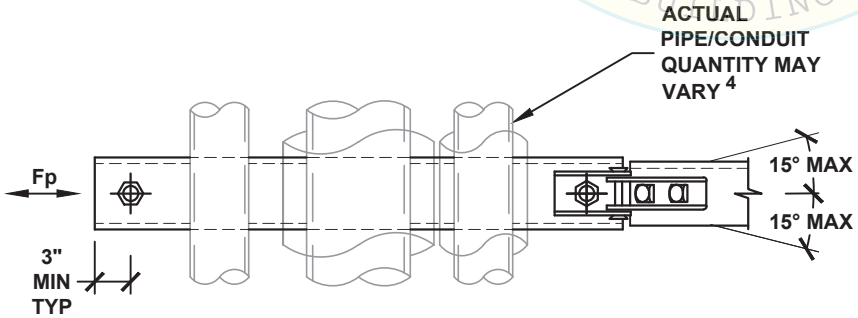

VIEW A-A

NOTES:

1. REF. SECTION A10 OR A20 FOR GENERAL NOTES.
2. PROVIDE ROD STIFFENING ONLY WHERE SEISMIC BRACKETS ARE ATTACHED TO THE ROD AND ROD LENGTH (L) EXCEEDS 43". REF. APPROPRIATE M10 PAGES FOR DETAIL.
3. REF. SECTION A15 OR A25 FOR ALTERNATE ARRANGEMENTS OF SEISMIC BRACES.
4. REF. SECTION A16 OR A26 FOR PIPE/CONDUIT ATTACHMENT OPTIONS.

REVIEWED FOR CODE COMPLIANCE
CALIFORNIA BUILDING CODE, 2013
OPM-0043-13
BY: Jeffrey Y. Kikumoto
DATE: 06/23/2016

MASON WEST, INC.
1601 E. Miraloma Ave. Placentia, CA 92870
TEL (714) 630 - 0701, www.masonwest.com

Jiefu "Jeff" Zhang, SE
California SE No. S5270

PAGE
F1.60

HANGER ROD DIAMETER = 1"	PIPING/CONDUIT LONGITUDINAL TRAPEZE SEISMIC SOLID BRACING SYSTEM 500 PLF MAX	KIT OPTIONS TS4L

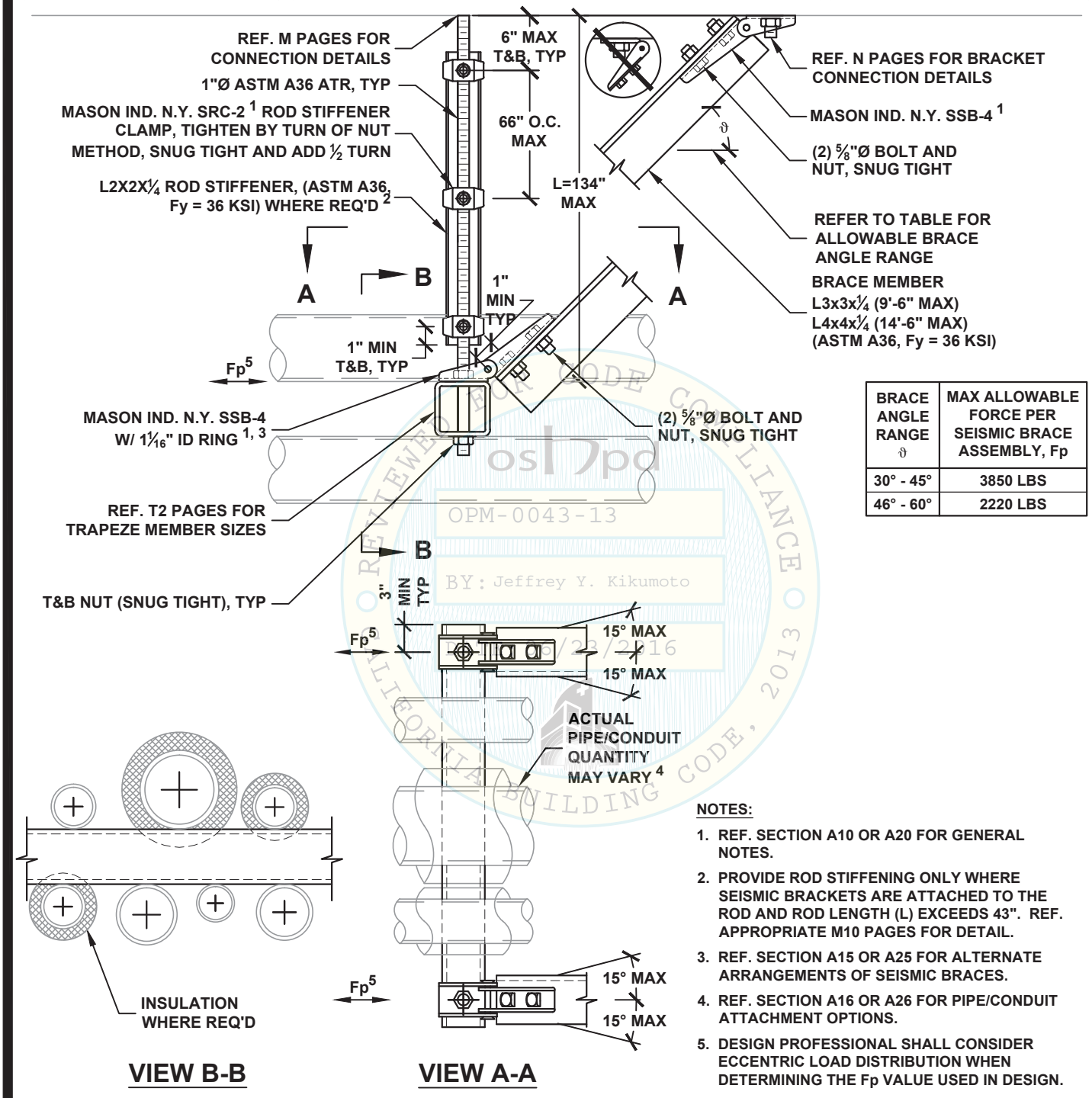

BRACE ANGLE RANGE ϑ	MAX ALLOWABLE FORCE PER SEISMIC BRACE ASSEMBLY, Fp
30° - 45°	3850 LBS
46° - 60°	2220 LBS

OSHPD
OPM-0043-13
BY: Jeffrey Y. Kikumoto
6/23/2016
REVIEWED FOR CODE COMPLIANCE
CALIFORNIA BUILDING CODE, 2013

NOTES:

1. REF. SECTION A10 OR A20 FOR GENERAL NOTES.
2. PROVIDE ROD STIFFENING ONLY WHERE SEISMIC BRACKETS ARE ATTACHED TO THE ROD AND ROD LENGTH (L) EXCEEDS 43". REF. APPROPRIATE M10 PAGES FOR DETAIL.
3. REF. SECTION A15 OR A25 FOR ALTERNATE ARRANGEMENTS OF SEISMIC BRACES.
4. REF. SECTION A16 OR A26 FOR PIPE/CONDUIT ATTACHMENT OPTIONS.
5. DESIGN PROFESSIONAL SHALL CONSIDER ECCENTRIC LOAD DISTRIBUTION WHEN DETERMINING THE Fp VALUE USED IN DESIGN.

MASON WEST, INC.
1601 E. Miraloma Ave. Placentia, CA 92870
TEL (714) 630 - 0701, www.masonwest.com

Jiefu "Jeff" Zhang, SE
California SE No. S5270

HANGER ROD DIAMETER = 1"

PIPING/CONDUIT ALL-DIRECTIONAL TRAPEZE SEISMIC SOLID BRACING SYSTEM 500 PLF MAX

KIT OPTIONS
TS4A

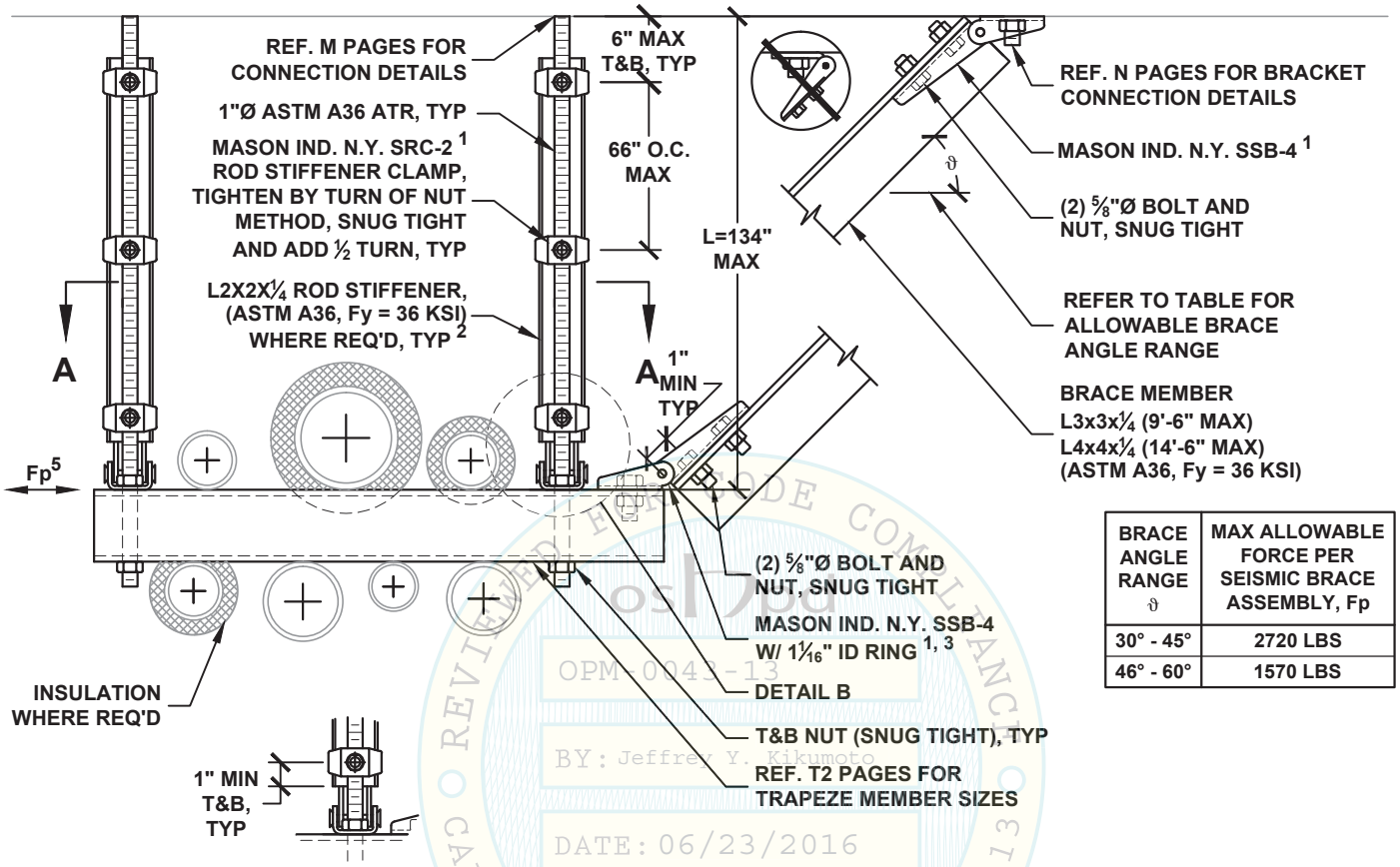

BRACE ANGLE RANGE ϑ	MAX ALLOWABLE FORCE PER SEISMIC BRACE ASSEMBLY, Fp
30° - 45°	2720 LBS
46° - 60°	1570 LBS

DETAIL B

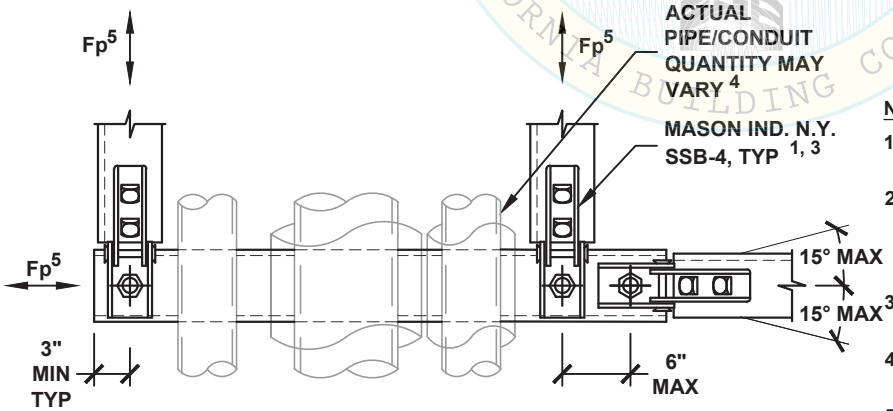

VIEW A-A

NOTES:

1. REF. SECTION A10 OR A20 FOR GENERAL NOTES.
2. PROVIDE ROD STIFFENING ONLY WHERE SEISMIC BRACKETS ARE ATTACHED TO THE ROD AND ROD LENGTH (L) EXCEEDS 43". REF. APPROPRIATE M10 PAGES FOR DETAIL.
3. REF. SECTION A15 OR A25 FOR ALTERNATE ARRANGEMENTS OF SEISMIC BRACES.
4. REF. SECTION A16 OR A26 FOR PIPE/CONDUIT ATTACHMENT OPTIONS.
5. DESIGN PROFESSIONAL SHALL CONSIDER ECCENTRIC LOAD DISTRIBUTION WHEN DETERMINING THE Fp VALUE USED IN DESIGN.

OSHPD
OPM-0043-13
BY: Jeffrey Y. Kikumoto
DATE: 06/23/2016
REVIEWED FOR CODE COMPLIANCE
CALIFORNIA BUILDING CODE, 2013

MASON WEST, INC.
1601 E. Miraloma Ave. Placentia, CA 92870
TEL (714) 630 - 0701, www.masonwest.com

Jiefu "Jeff" Zhang, SE
California SE No. S5270

PAGE
F1.62

HANGER ROD DIAMETER = 1¼"	PIPING/CONDUIT TRANSVERSE TRAPEZE SEISMIC SOLID BRACING SYSTEM 500 PLF MAX	KIT OPTIONS TS4T

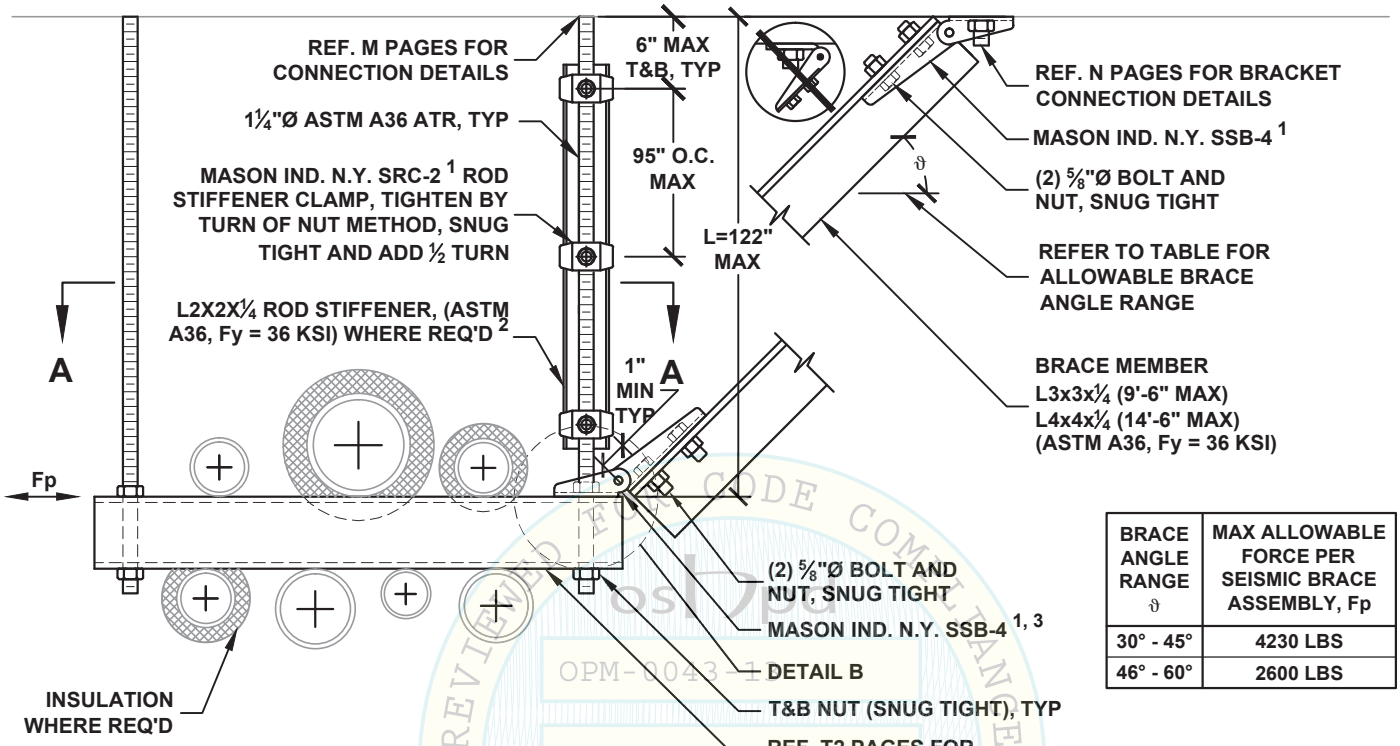

BRACE ANGLE RANGE ϑ	MAX ALLOWABLE FORCE PER SEISMIC BRACE ASSEMBLY, Fp
30° - 45°	4230 LBS
46° - 60°	2600 LBS

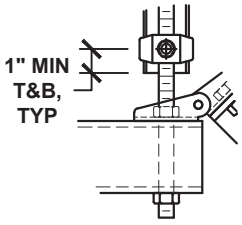

DETAIL B

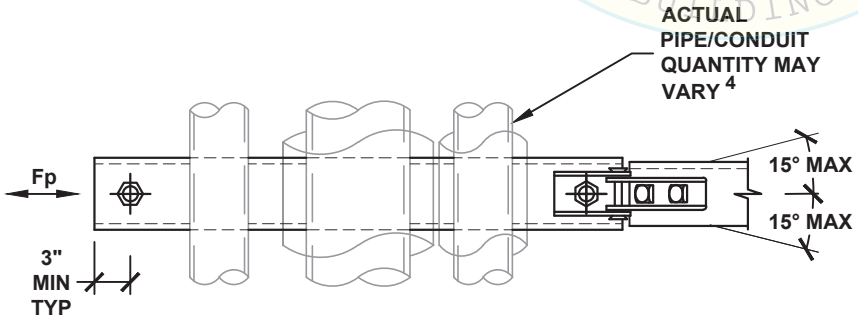

VIEW A-A

NOTES:

1. REF. SECTION A10 OR A20 FOR GENERAL NOTES.
2. PROVIDE ROD STIFFENING ONLY WHERE SEISMIC BRACKETS ARE ATTACHED TO THE ROD AND ROD LENGTH (L) EXCEEDS 62". REF. APPROPRIATE M10 PAGES FOR DETAIL.
3. REF. SECTION A15 OR A25 FOR ALTERNATE ARRANGEMENTS OF SEISMIC BRACES.
4. REF. SECTION A16 OR A26 FOR PIPE/CONDUIT ATTACHMENT OPTIONS.

OSHPD
OPM-0043-13
BY: Jeffrey K.
DATE: 06/23/2016
REVIEWED FOR CODE COMPLIANCE
CALIFORNIA BUILDING CODE, 2013

MASON WEST, INC.
1601 E. Miraloma Ave. Placentia, CA 92870
TEL (714) 630 - 0701, www.masonwest.com

Jiefu "Jeff" Zhang, SE
California SE No. S5270

PAGE
F1.70

HANGER ROD DIAMETER = 1¼"

PIPING/CONDUIT LONGITUDINAL TRAPEZE SEISMIC SOLID BRACING SYSTEM 500 PLF MAX

KIT OPTIONS
TS4L

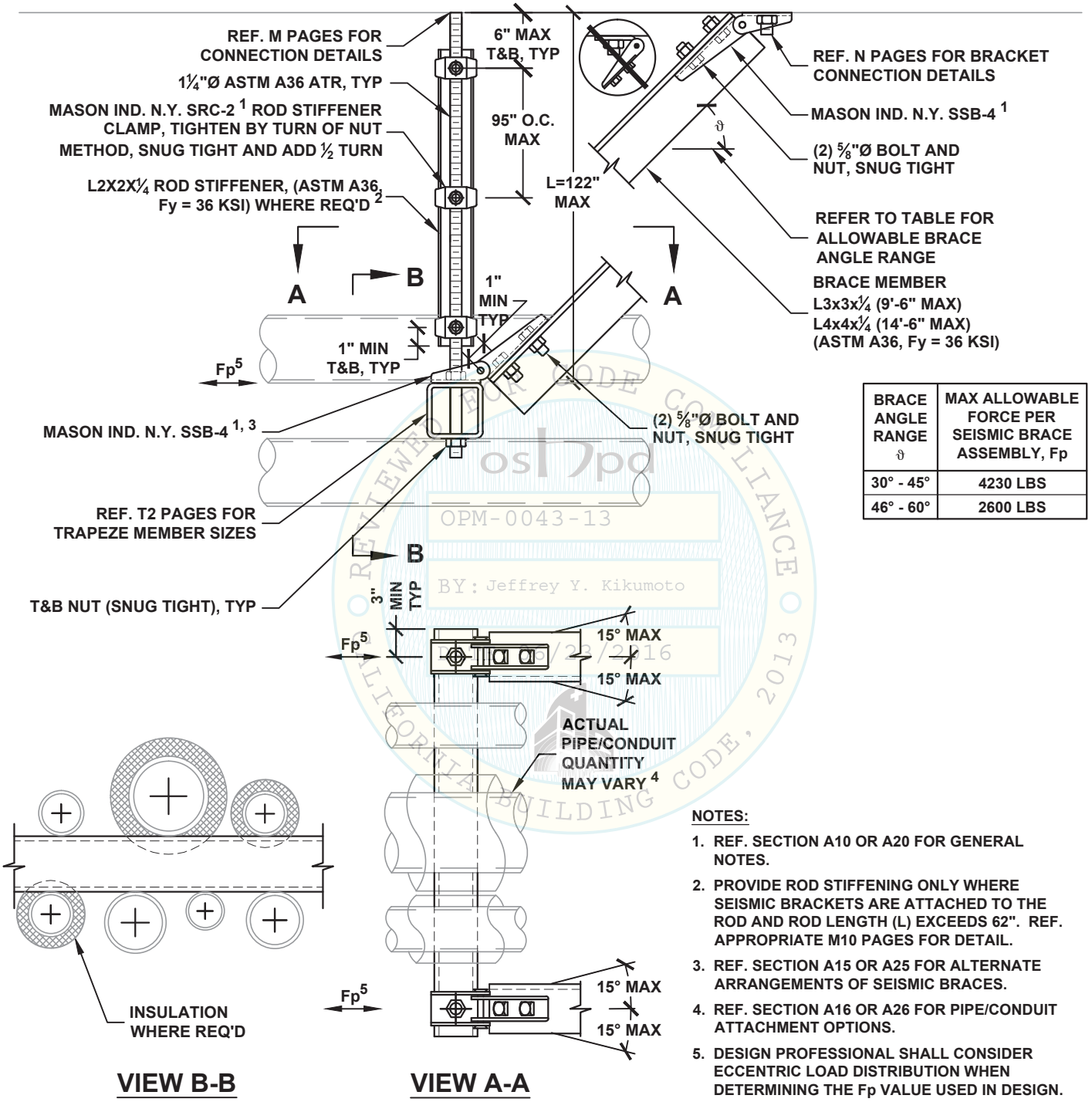

BRACE ANGLE RANGE ϑ	MAX ALLOWABLE FORCE PER SEISMIC BRACE ASSEMBLY, Fp
30° - 45°	4230 LBS
46° - 60°	2600 LBS

REVIEWED FOR CODE COMPLIANCE
OSHPD
OPM-0043-13
BY: Jeffrey Y. Kikumoto
06/23/2016
CALIFORNIA BUILDING CODE, 2013

NOTES:

1. REF. SECTION A10 OR A20 FOR GENERAL NOTES.
2. PROVIDE ROD STIFFENING ONLY WHERE SEISMIC BRACKETS ARE ATTACHED TO THE ROD AND ROD LENGTH (L) EXCEEDS 62". REF. APPROPRIATE M10 PAGES FOR DETAIL.
3. REF. SECTION A15 OR A25 FOR ALTERNATE ARRANGEMENTS OF SEISMIC BRACES.
4. REF. SECTION A16 OR A26 FOR PIPE/CONDUIT ATTACHMENT OPTIONS.
5. DESIGN PROFESSIONAL SHALL CONSIDER ECCENTRIC LOAD DISTRIBUTION WHEN DETERMINING THE Fp VALUE USED IN DESIGN.

MASON WEST, INC.
1601 E. Miraloma Ave. Placentia, CA 92870
TEL (714) 630 - 0701, www.masonwest.com

Jiefu "Jeff" Zhang, SE
California SE No. S5270

PAGE
F1.71

HANGER ROD DIAMETER = 1¼"	PIPING/CONDUIT ALL-DIRECTIONAL TRAPEZE SEISMIC SOLID BRACING SYSTEM 500 PLF MAX	KIT OPTIONS TS4A

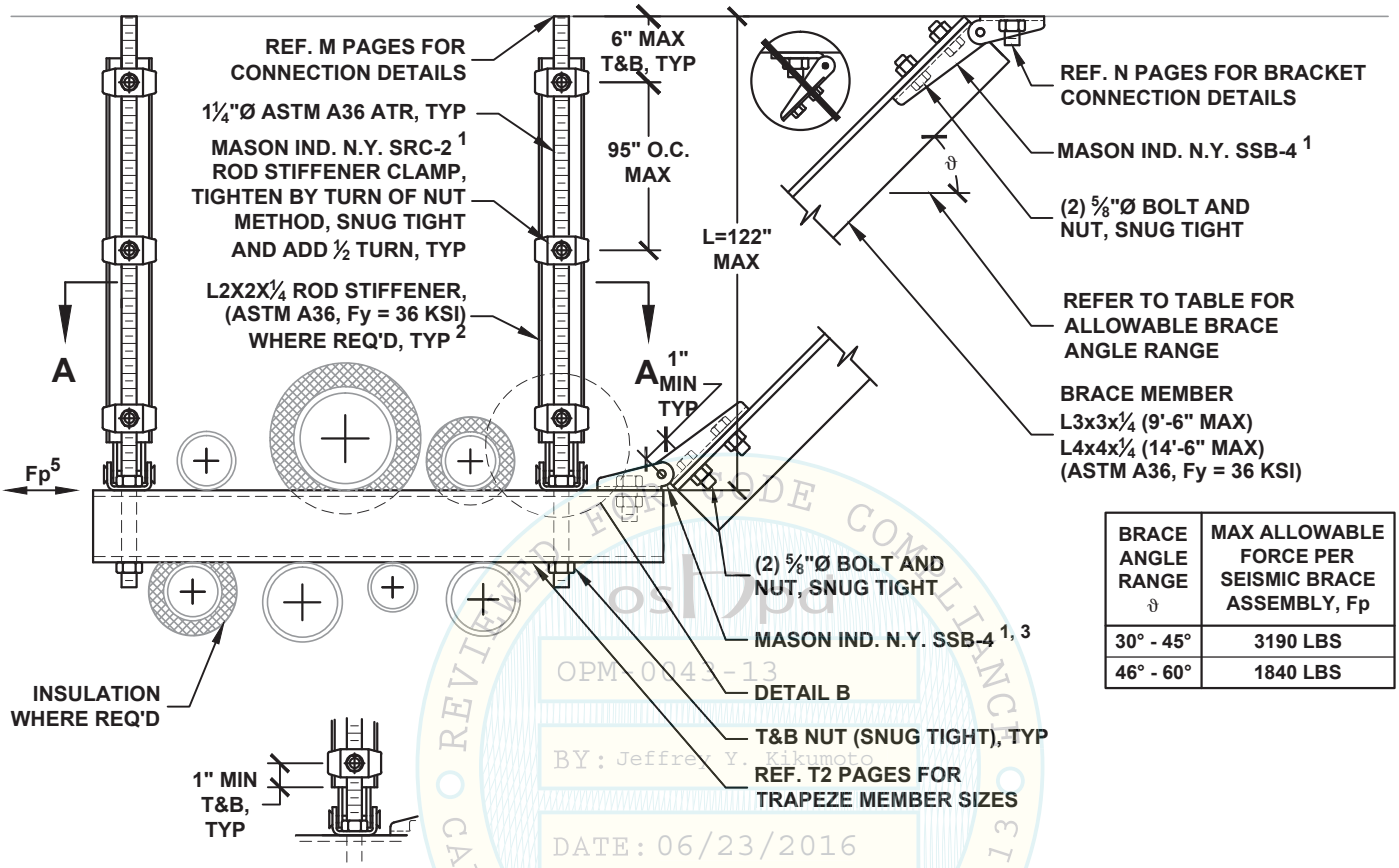

BRACE ANGLE RANGE ϑ	MAX ALLOWABLE FORCE PER SEISMIC BRACE ASSEMBLY, Fp
30° - 45°	3190 LBS
46° - 60°	1840 LBS

DETAIL B

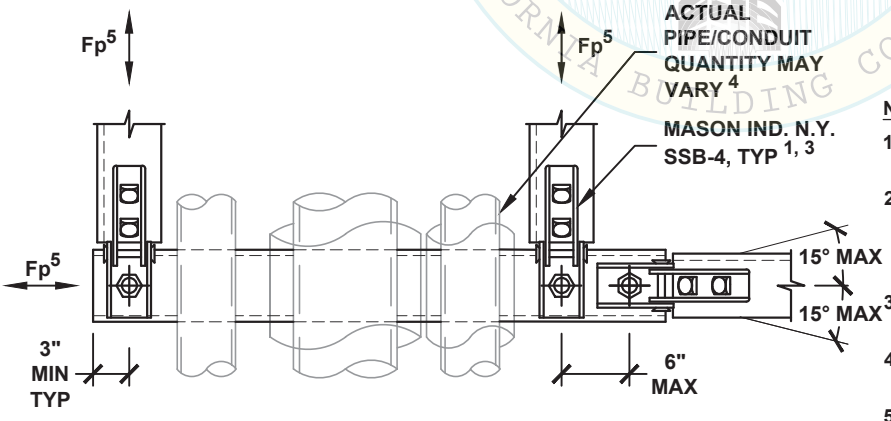

VIEW A-A

NOTES:

1. REF. SECTION A10 OR A20 FOR GENERAL NOTES.
2. PROVIDE ROD STIFFENING ONLY WHERE SEISMIC BRACKETS ARE ATTACHED TO THE ROD AND ROD LENGTH (L) EXCEEDS 62". REF. APPROPRIATE M10 PAGES FOR DETAIL.
3. REF. SECTION A15 OR A25 FOR ALTERNATE ARRANGEMENTS OF SEISMIC BRACES.
4. REF. SECTION A16 OR A26 FOR PIPE/CONDUIT ATTACHMENT OPTIONS.
5. DESIGN PROFESSIONAL SHALL CONSIDER ECCENTRIC LOAD DISTRIBUTION WHEN DETERMINING THE Fp VALUE USED IN DESIGN.

OSHPD
OPM-0043-13
BY: Jeffrey Y. Kikumoto
DATE: 06/23/2016
REVIEWED FOR CODE COMPLIANCE
CALIFORNIA BUILDING CODE, 2013

MASON WEST, INC.
1601 E. Miraloma Ave. Placentia, CA 92870
TEL (714) 630 - 0701, www.masonwest.com

Jiefu "Jeff" Zhang, SE
California SE No. S5270

PAGE
F1.72

HANGER ROD DIAMETER = 1¼"

PIPING/CONDUIT TRANSVERSE TRAPEZE SEISMIC SOLID BRACING SYSTEM 500 PLF MAX

KIT OPTIONS
TS4T

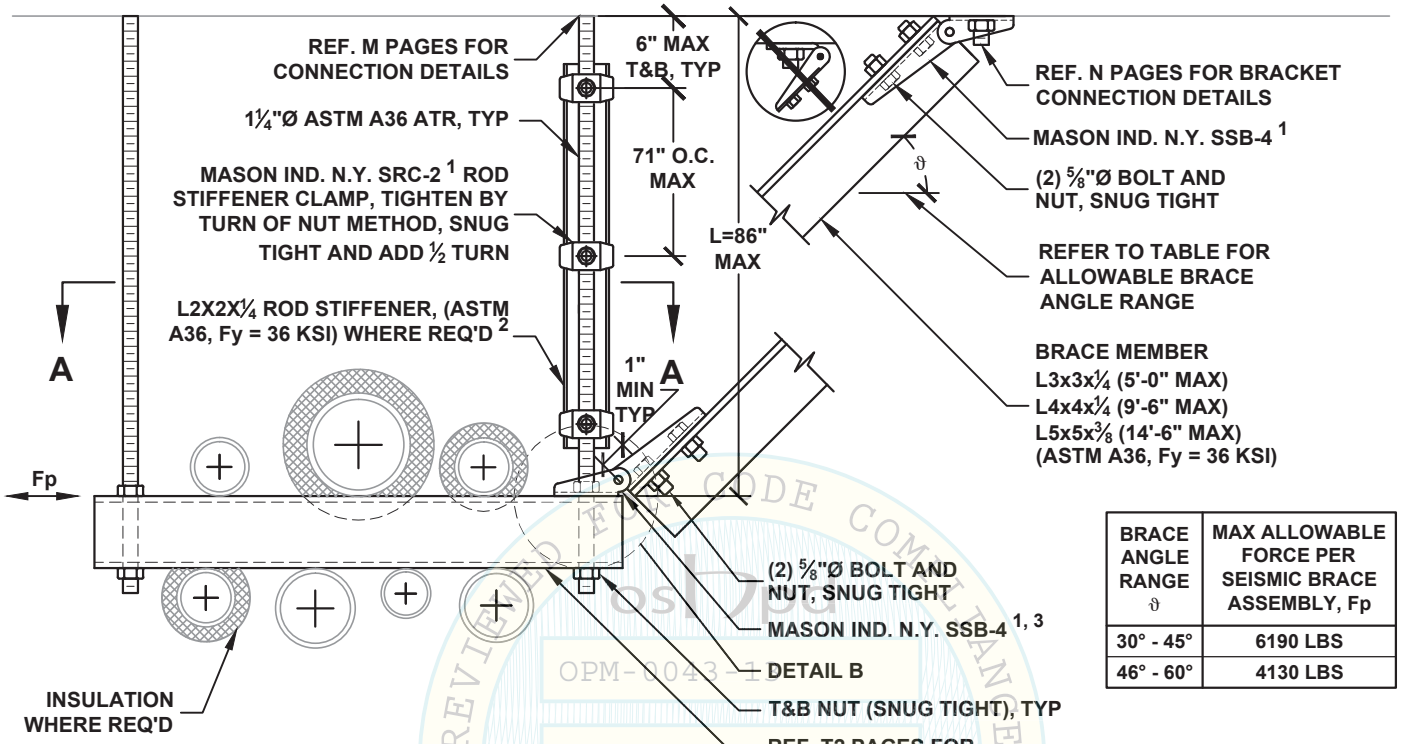

BRACE ANGLE RANGE ϑ	MAX ALLOWABLE FORCE PER SEISMIC BRACE ASSEMBLY, Fp
30° - 45°	6190 LBS
46° - 60°	4130 LBS

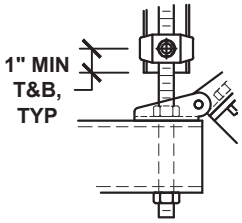

DETAIL B

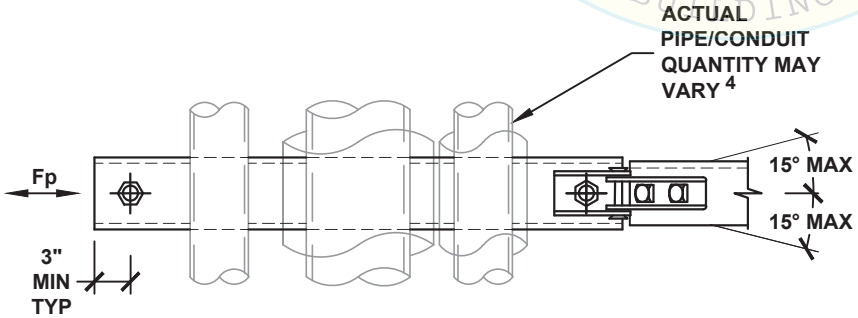

VIEW A-A

NOTES:

1. REF. SECTION A10 OR A20 FOR GENERAL NOTES.
2. PROVIDE ROD STIFFENING ONLY WHERE SEISMIC BRACKETS ARE ATTACHED TO THE ROD AND ROD LENGTH (L) EXCEEDS 46". REF. APPROPRIATE M10 PAGES FOR DETAIL.
3. REF. SECTION A15 OR A25 FOR ALTERNATE ARRANGEMENTS OF SEISMIC BRACES.
4. REF. SECTION A16 OR A26 FOR PIPE/CONDUIT ATTACHMENT OPTIONS.

OSHPD
OPM-0043-13
BY: Jeffrey K.
DATE: 06/23/2016
REVIEWED FOR CODE COMPLIANCE
CALIFORNIA BUILDING CODE, 2013

MASON WEST, INC.
1601 E. Miraloma Ave. Placentia, CA 92870
TEL (714) 630 - 0701, www.masonwest.com

Jiefu "Jeff" Zhang, SE
California SE No. S5270

PAGE
F1.73

HANGER ROD DIAMETER = 1¼"	PIPING/CONDUIT LONGITUDINAL TRAPEZE SEISMIC SOLID BRACING SYSTEM 500 PLF MAX	KIT OPTIONS TS4L

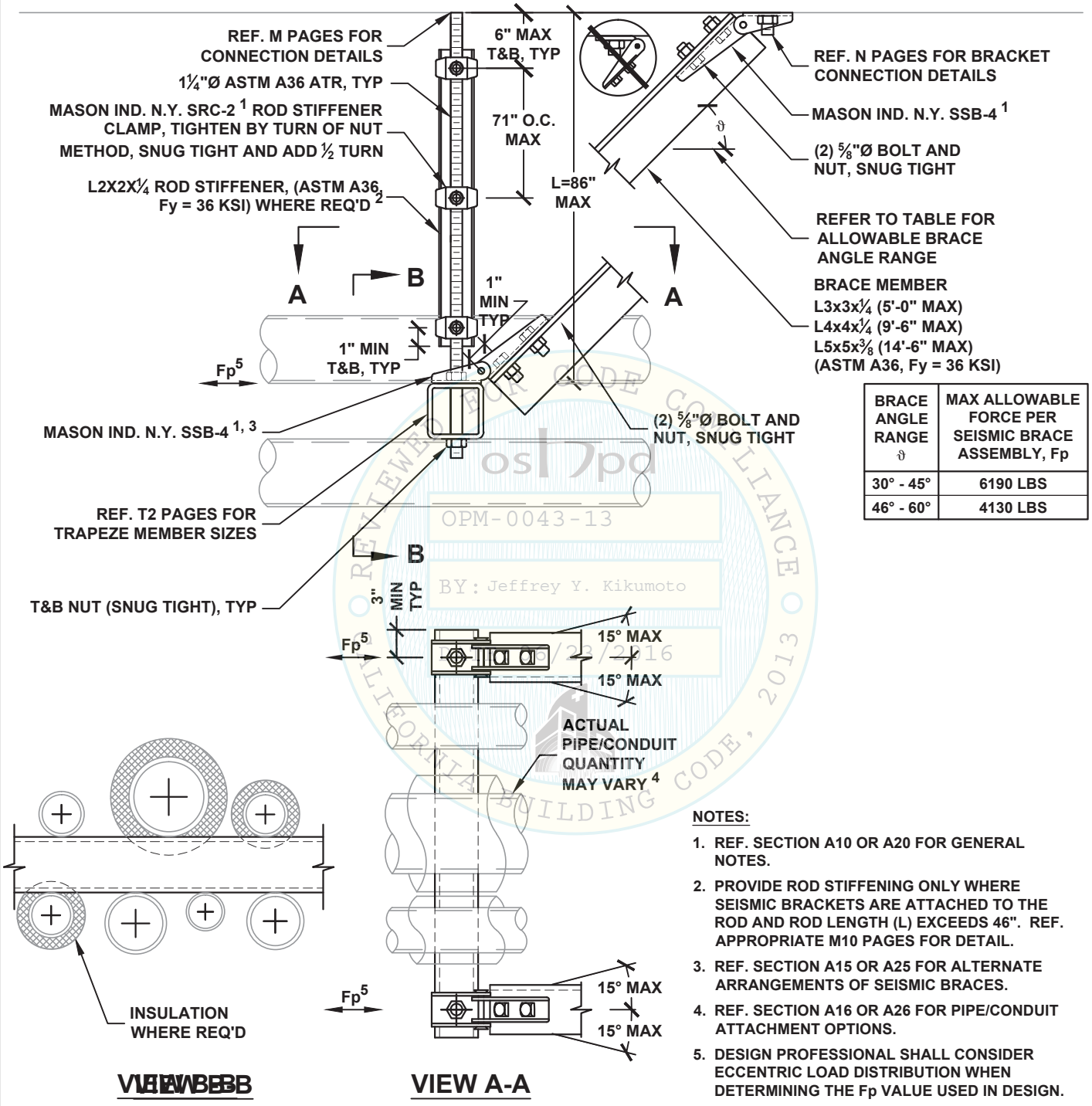

BRACE ANGLE RANGE ϑ	MAX ALLOWABLE FORCE PER SEISMIC BRACE ASSEMBLY, Fp
30° - 45°	6190 LBS
46° - 60°	4130 LBS

OSHPD
OPM-0043-13
BY: Jeffrey Y. Kikumoto
06/23/2016
REVIEWED FOR CODE COMPLIANCE
CALIFORNIA BUILDING CODE, 2013

NOTES:

1. REF. SECTION A10 OR A20 FOR GENERAL NOTES.
2. PROVIDE ROD STIFFENING ONLY WHERE SEISMIC BRACKETS ARE ATTACHED TO THE ROD AND ROD LENGTH (L) EXCEEDS 46". REF. APPROPRIATE M10 PAGES FOR DETAIL.
3. REF. SECTION A15 OR A25 FOR ALTERNATE ARRANGEMENTS OF SEISMIC BRACES.
4. REF. SECTION A16 OR A26 FOR PIPE/CONDUIT ATTACHMENT OPTIONS.
5. DESIGN PROFESSIONAL SHALL CONSIDER ECCENTRIC LOAD DISTRIBUTION WHEN DETERMINING THE Fp VALUE USED IN DESIGN.

MASON WEST, INC.
1601 E. Miraloma Ave. Placentia, CA 92870
TEL (714) 630 - 0701, www.masonwest.com

Jiefu "Jeff" Zhang, SE
California SE No. S5270

HANGER ROD DIAMETER = 1¼"	PIPING/CONDUIT ALL-DIRECTIONAL TRAPEZE SEISMIC SOLID BRACING SYSTEM 500 PLF MAX	KIT OPTIONS TS4A

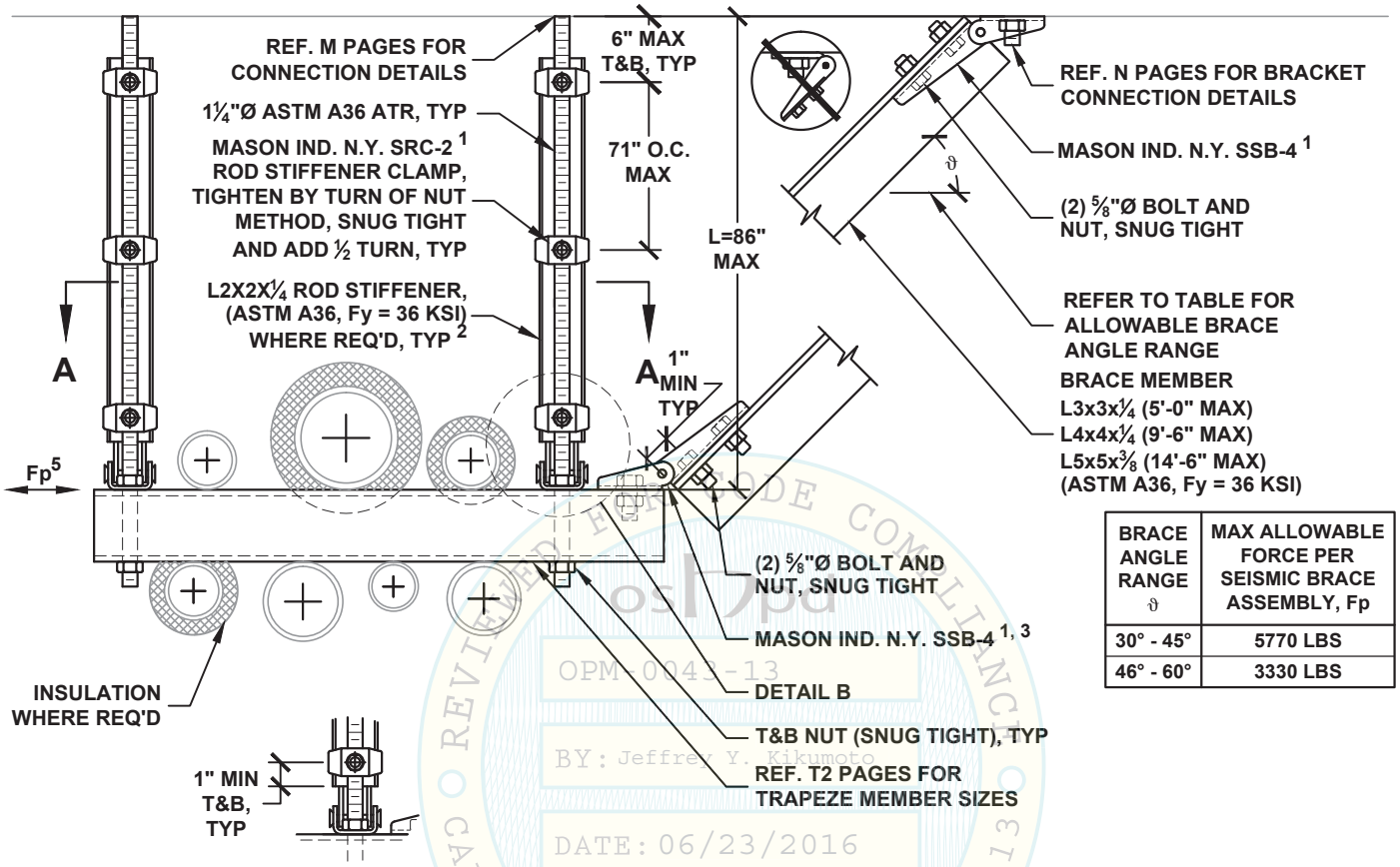

BRACE ANGLE RANGE ϑ	MAX ALLOWABLE FORCE PER SEISMIC BRACE ASSEMBLY, Fp
30° - 45°	5770 LBS
46° - 60°	3330 LBS

DETAIL B

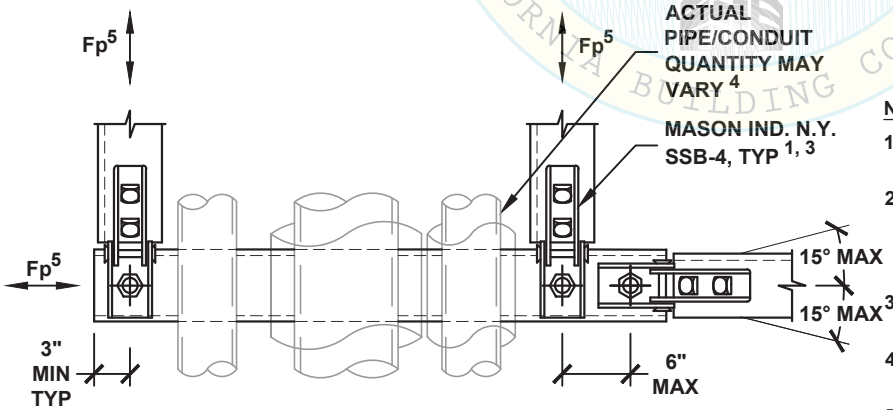

VIEW A-A

NOTES:

1. REF. SECTION A10 OR A20 FOR GENERAL NOTES.
2. PROVIDE ROD STIFFENING ONLY WHERE SEISMIC BRACKETS ARE ATTACHED TO THE ROD AND ROD LENGTH (L) EXCEEDS 46". REF. APPROPRIATE M10 PAGES FOR DETAIL.
3. REF. SECTION A15 OR A25 FOR ALTERNATE ARRANGEMENTS OF SEISMIC BRACES.
4. REF. SECTION A16 OR A26 FOR PIPE/CONDUIT ATTACHMENT OPTIONS.
5. DESIGN PROFESSIONAL SHALL CONSIDER ECCENTRIC LOAD DISTRIBUTION WHEN DETERMINING THE Fp VALUE USED IN DESIGN.

OSHPD
OPM-0043-13
BY: Jeffrey Y. Kikumoto
DATE: 06/23/2016
REVIEWED FOR CODE COMPLIANCE
CALIFORNIA BUILDING CODE, 2013

MASON WEST, INC.
1601 E. Miraloma Ave. Placentia, CA 92870
TEL (714) 630 - 0701, www.masonwest.com

Jiefu "Jeff" Zhang, SE
California SE No. S5270

PAGE
F1.75

HANGER ROD DIAMETER = 3/8"	PIPING/CONDUIT TRANSVERSE TRAPEZE SEISMIC CABLE BRACING SYSTEM 30 PLF MAX	KIT OPTIONS TC0T

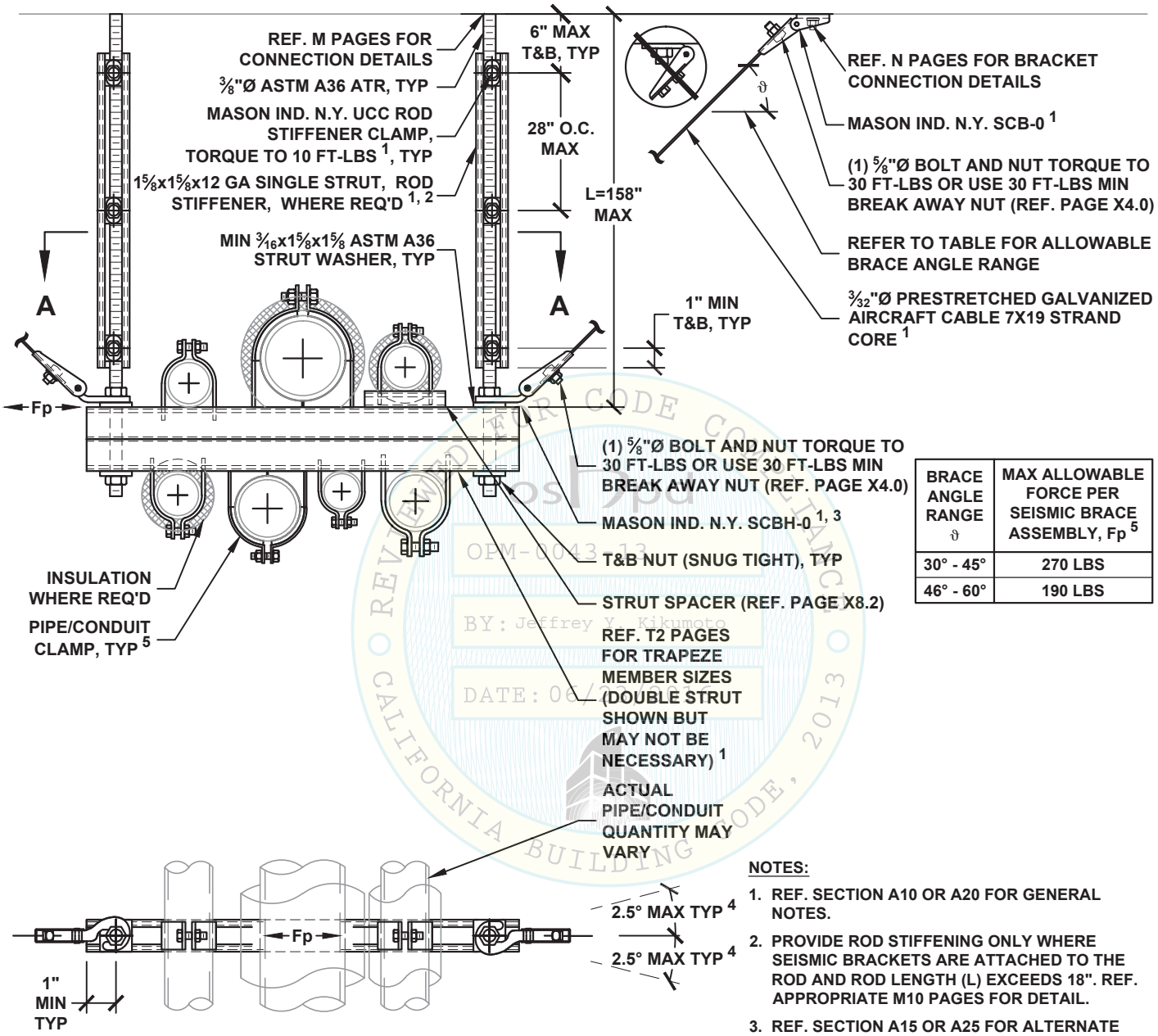

BRACE ANGLE RANGE ϑ	MAX ALLOWABLE FORCE PER SEISMIC BRACE ASSEMBLY, Fp 5
30° - 45°	270 LBS
46° - 60°	190 LBS

VIEW A-A

NOTES:

1. REF. SECTION A10 OR A20 FOR GENERAL NOTES.
2. PROVIDE ROD STIFFENING ONLY WHERE SEISMIC BRACKETS ARE ATTACHED TO THE ROD AND ROD LENGTH (L) EXCEEDS 18". REF. APPROPRIATE M10 PAGES FOR DETAIL.
3. REF. SECTION A15 OR A25 FOR ALTERNATE ARRANGEMENTS OF SEISMIC BRACES.
4. TO INCREASE ANGLE UP TO 15°, REF. PAGE A14.1 OR A24.2.
5. REF. X8.0 - X8.1.1 FOR PIPE/CONDUIT CLAMP OPTIONS. CLAMP RATINGS MAY REDUCE MAX ALLOWABLE Fp.

REVIEWED FOR CODE COMPLIANCE
CALIFORNIA BUILDING CODE, 2013
OPM-0043-13
BY: Jeffrey Y. Kikumoto
DATE: 06/23/2016

MASON WEST, INC.
1601 E. Miraloma Ave. Placentia, CA 92870
TEL (714) 630 - 0701, www.masonwest.com

Jiefu "Jeff" Zhang, SE
California SE No. S5270

PAGE
F2.10

HANGER ROD DIAMETER = 3/8"	PIPING/CONDUIT LONGITUDINAL TRAPEZE SEISMIC CABLE BRACING SYSTEM 30 PLF MAX	KIT OPTIONS TC0L

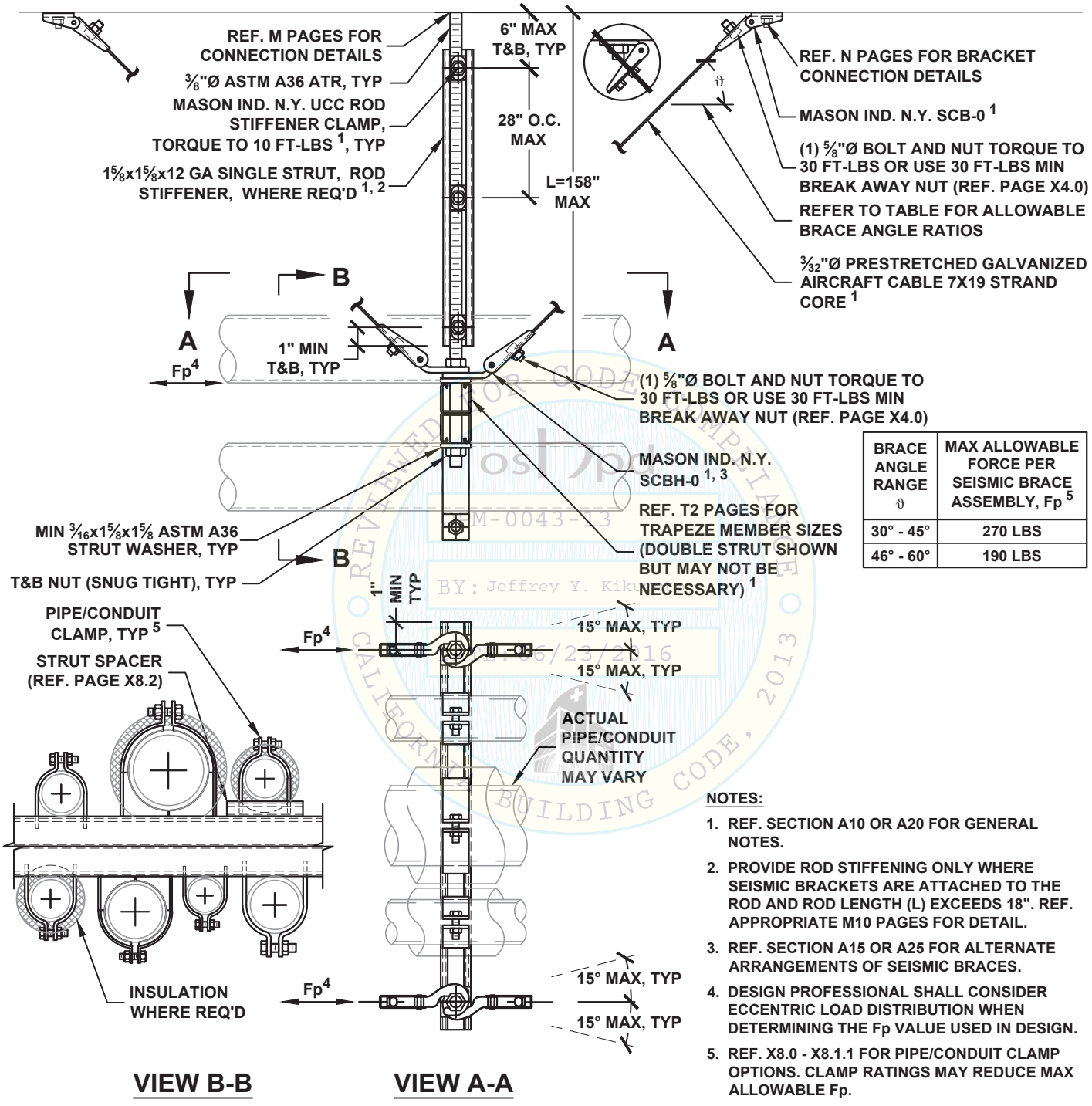

BRACE ANGLE RANGE ϑ	MAX ALLOWABLE FORCE PER SEISMIC BRACE ASSEMBLY, Fp 5
30° - 45°	270 LBS
46° - 60°	190 LBS

VIEW B-B **VIEW A-A**

NOTES:

1. REF. SECTION A10 OR A20 FOR GENERAL NOTES.
2. PROVIDE ROD STIFFENING ONLY WHERE SEISMIC BRACKETS ARE ATTACHED TO THE ROD AND ROD LENGTH (L) EXCEEDS 18". REF. APPROPRIATE M10 PAGES FOR DETAIL.
3. REF. SECTION A15 OR A25 FOR ALTERNATE ARRANGEMENTS OF SEISMIC BRACES.
4. DESIGN PROFESSIONAL SHALL CONSIDER ECCENTRIC LOAD DISTRIBUTION WHEN DETERMINING THE Fp VALUE USED IN DESIGN.
5. REF. X8.0 - X8.1.1 FOR PIPE/CONDUIT CLAMP OPTIONS. CLAMP RATINGS MAY REDUCE MAX ALLOWABLE Fp.

REVIEWED FOR CODE COMPLIANCE
OPM-0043-13
BY: Jeffrey Y. Kikumoto
06/23/2016
CALIFORNIA BUILDING CODE, 2013

MASON WEST, INC.
1601 E. Miraloma Ave. Placentia, CA 92870
TEL (714) 630 - 0701, www.masonwest.com

Jiefu "Jeff" Zhang, SE
California SE No. S5270

PAGE **F2.11**

HANGER ROD DIAMETER = 3/8"

PIPING/CONDUIT ALL-DIRECTIONAL TRAPEZE SEISMIC CABLE BRACING SYSTEM 30 PLF MAX

KIT OPTIONS
TC0A

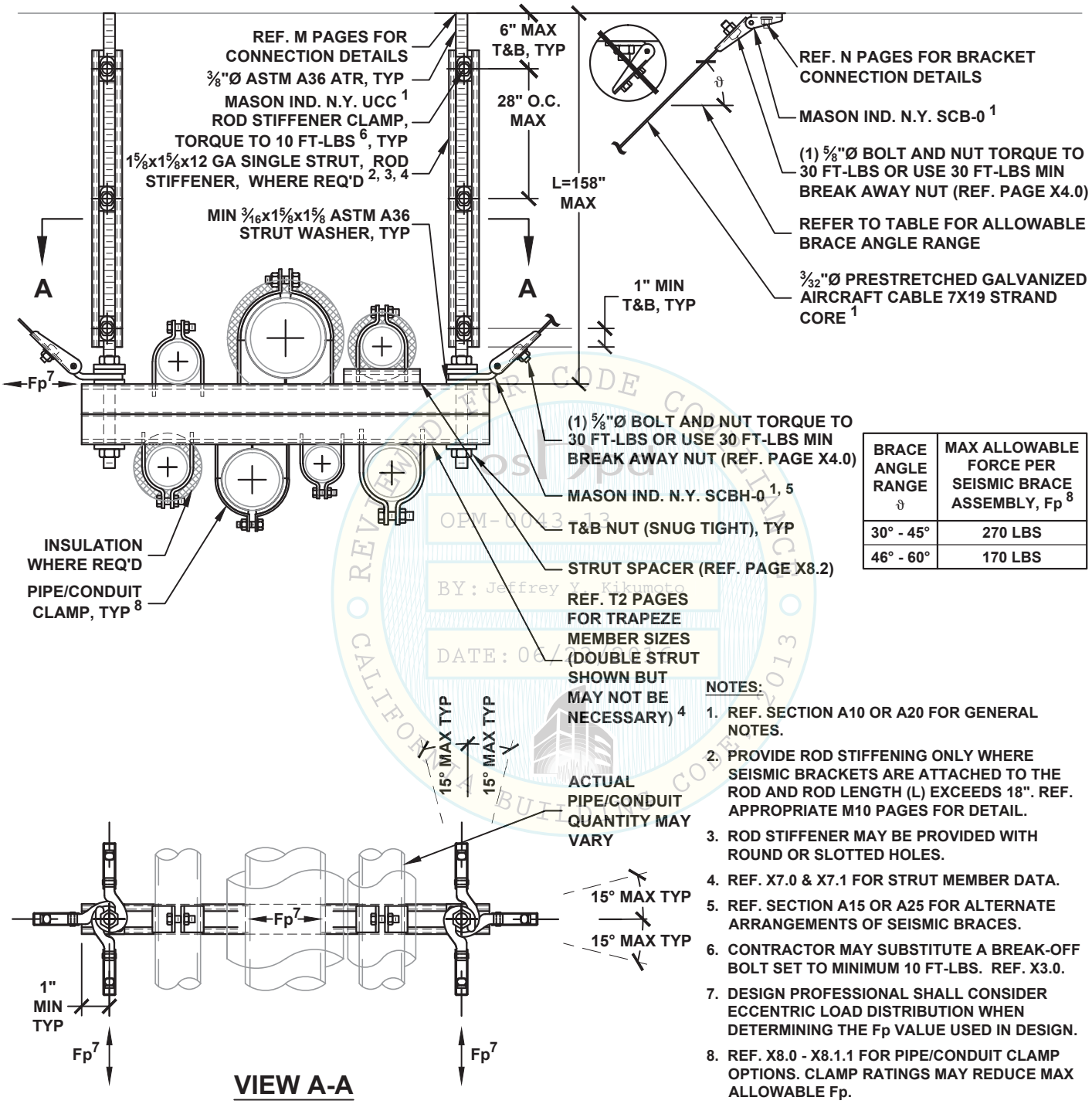

VIEW A-A

BRACE ANGLE RANGE ϑ	MAX ALLOWABLE FORCE PER SEISMIC BRACE ASSEMBLY, Fp 8
30° - 45°	270 LBS
46° - 60°	170 LBS

NOTES:

1. REF. SECTION A10 OR A20 FOR GENERAL NOTES.
2. PROVIDE ROD STIFFENING ONLY WHERE SEISMIC BRACKETS ARE ATTACHED TO THE ROD AND ROD LENGTH (L) EXCEEDS 18". REF. APPROPRIATE M10 PAGES FOR DETAIL.
3. ROD STIFFENER MAY BE PROVIDED WITH ROUND OR SLOTTED HOLES.
4. REF. X7.0 & X7.1 FOR STRUT MEMBER DATA.
5. REF. SECTION A15 OR A25 FOR ALTERNATE ARRANGEMENTS OF SEISMIC BRACES.
6. CONTRACTOR MAY SUBSTITUTE A BREAK-OFF BOLT SET TO MINIMUM 10 FT-LBS. REF. X3.0.
7. DESIGN PROFESSIONAL SHALL CONSIDER ECCENTRIC LOAD DISTRIBUTION WHEN DETERMINING THE Fp VALUE USED IN DESIGN.
8. REF. X8.0 - X8.1.1 FOR PIPE/CONDUIT CLAMP OPTIONS. CLAMP RATINGS MAY REDUCE MAX ALLOWABLE Fp.

REVIEWED FOR CODE COMPLIANCE
OPM-0043-13
BY: Jeffrey Y. Kikumoto
DATE: 06/23/2016
CALIFORNIA BUILDING CODE 2013

MASON WEST, INC.
1601 E. Miraloma Ave. Placentia, CA 92870
TEL (714) 630 - 0701, www.masonwest.com

Jiefu "Jeff" Zhang, SE
California SE No. S5270

HANGER ROD DIAMETER = ½"	PIPING/CONDUIT TRANSVERSE TRAPEZE SEISMIC CABLE BRACING SYSTEM 60 PLF MAX	KIT OPTIONS TC1T

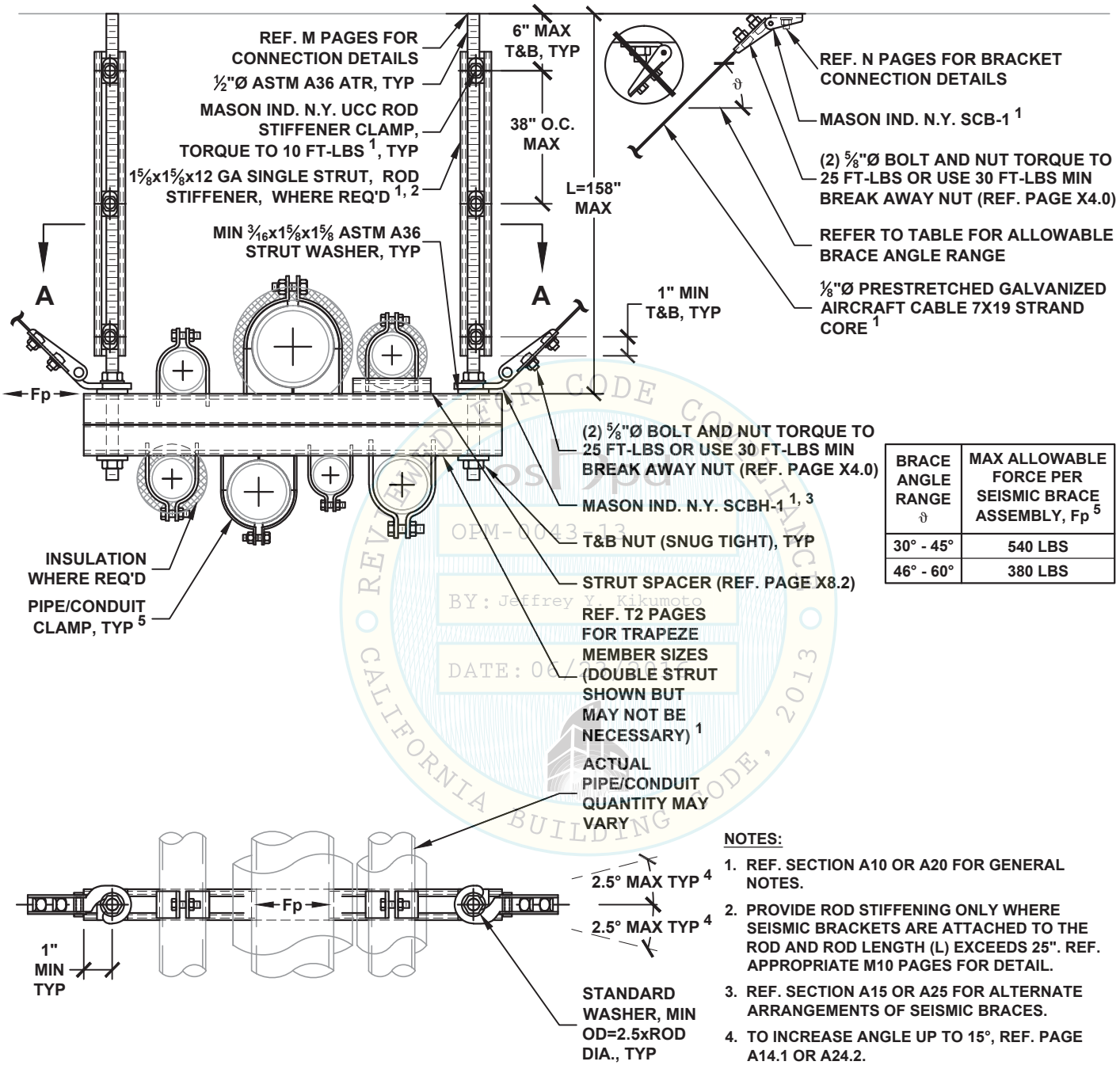

BRACE ANGLE RANGE ϑ	MAX ALLOWABLE FORCE PER SEISMIC BRACE ASSEMBLY, Fp [5]
30° - 45°	540 LBS
46° - 60°	380 LBS

VIEW A-A

NOTES:

1. REF. SECTION A10 OR A20 FOR GENERAL NOTES.
2. PROVIDE ROD STIFFENING ONLY WHERE SEISMIC BRACKETS ARE ATTACHED TO THE ROD AND ROD LENGTH (L) EXCEEDS 25". REF. APPROPRIATE M10 PAGES FOR DETAIL.
3. REF. SECTION A15 OR A25 FOR ALTERNATE ARRANGEMENTS OF SEISMIC BRACES.
4. TO INCREASE ANGLE UP TO 15°, REF. PAGE A14.1 OR A24.2.
5. REF. X8.0 - X8.1.1 FOR PIPE/CONDUIT CLAMP OPTIONS. CLAMP RATINGS MAY REDUCE MAX ALLOWABLE Fp.

REVIEWED FOR CODE COMPLIANCE
CALIFORNIA BUILDING CODE, 2013
OPM-0043-13
BY: Jeffrey Y. Kikumoto
DATE: 06/23/2016

MASON WEST, INC.
1601 E. Miraloma Ave. Placentia, CA 92870
TEL (714) 630 - 0701, www.masonwest.com

Jiefu "Jeff" Zhang, SE
California SE No. S5270

PAGE
F2.20

HANGER ROD DIAMETER = ½"	PIPING/CONDUIT LONGITUDINAL TRAPEZE SEISMIC CABLE BRACING SYSTEM 60 PLF MAX	KIT OPTIONS TC1L

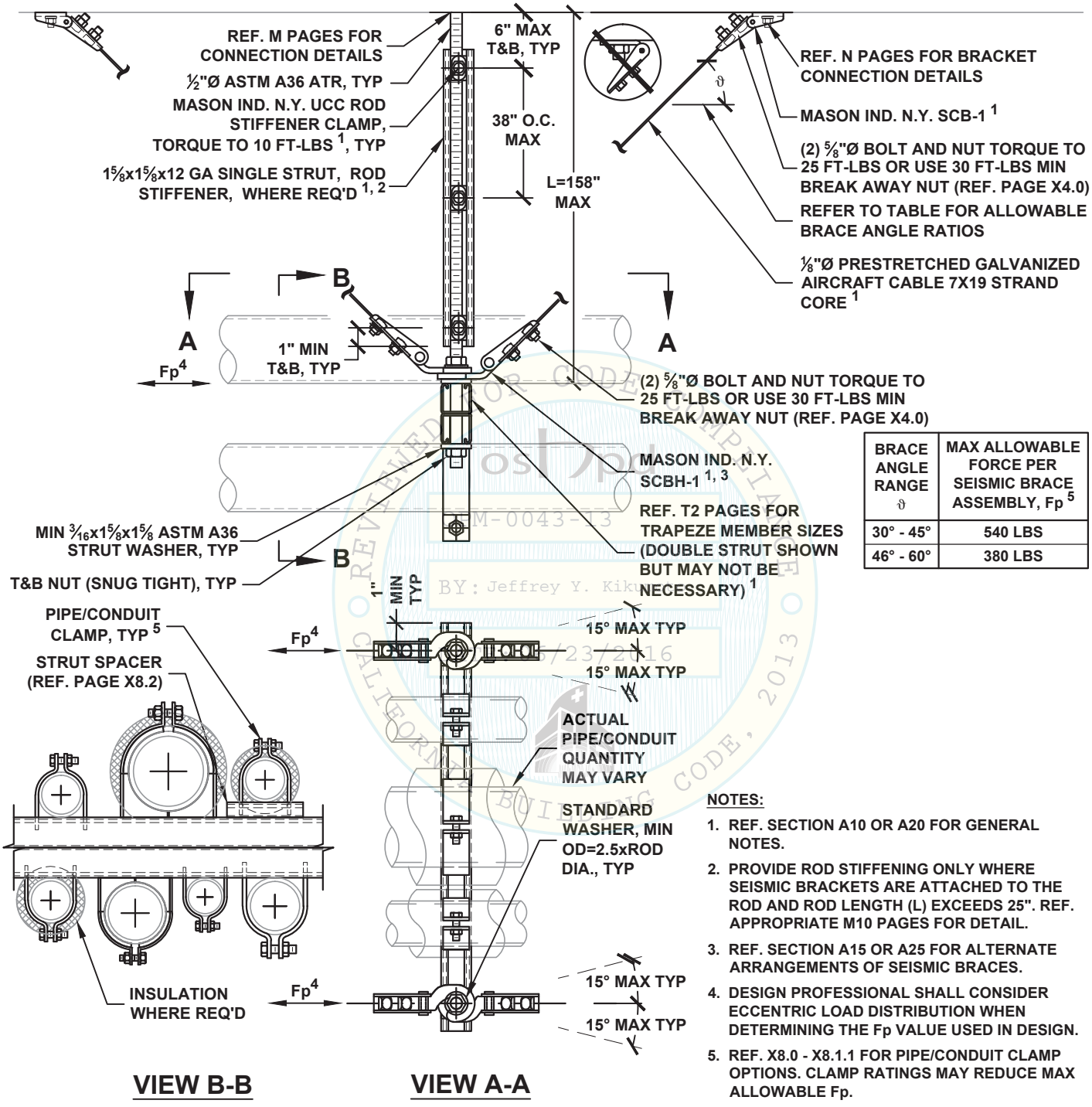

BRACE ANGLE RANGE ϑ	MAX ALLOWABLE FORCE PER SEISMIC BRACE ASSEMBLY, Fp [5]
30° - 45°	540 LBS
46° - 60°	380 LBS

NOTES:

1. REF. SECTION A10 OR A20 FOR GENERAL NOTES.
2. PROVIDE ROD STIFFENING ONLY WHERE SEISMIC BRACKETS ARE ATTACHED TO THE ROD AND ROD LENGTH (L) EXCEEDS 25". REF. APPROPRIATE M10 PAGES FOR DETAIL.
3. REF. SECTION A15 OR A25 FOR ALTERNATE ARRANGEMENTS OF SEISMIC BRACES.
4. DESIGN PROFESSIONAL SHALL CONSIDER ECCENTRIC LOAD DISTRIBUTION WHEN DETERMINING THE Fp VALUE USED IN DESIGN.
5. REF. X8.0 - X8.1.1 FOR PIPE/CONDUIT CLAMP OPTIONS. CLAMP RATINGS MAY REDUCE MAX ALLOWABLE Fp.

REVIEWED FOR CODE COMPLIANCE
OPM-0043-13
BY: Jeffrey Y. Kikumoto
06/23/2016
CALIFORNIA BUILDING CODE, 2013

MASON WEST, INC.
1601 E. Miraloma Ave. Placentia, CA 92870
TEL (714) 630 - 0701, www.masonwest.com

Jiefu "Jeff" Zhang, SE
California SE No. S5270

PAGE
F2.21

HANGER ROD DIAMETER = ½"

PIPING/CONDUIT ALL-DIRECTIONAL TRAPEZE SEISMIC CABLE BRACING SYSTEM 60 PLF MAX

KIT OPTIONS
TC1A

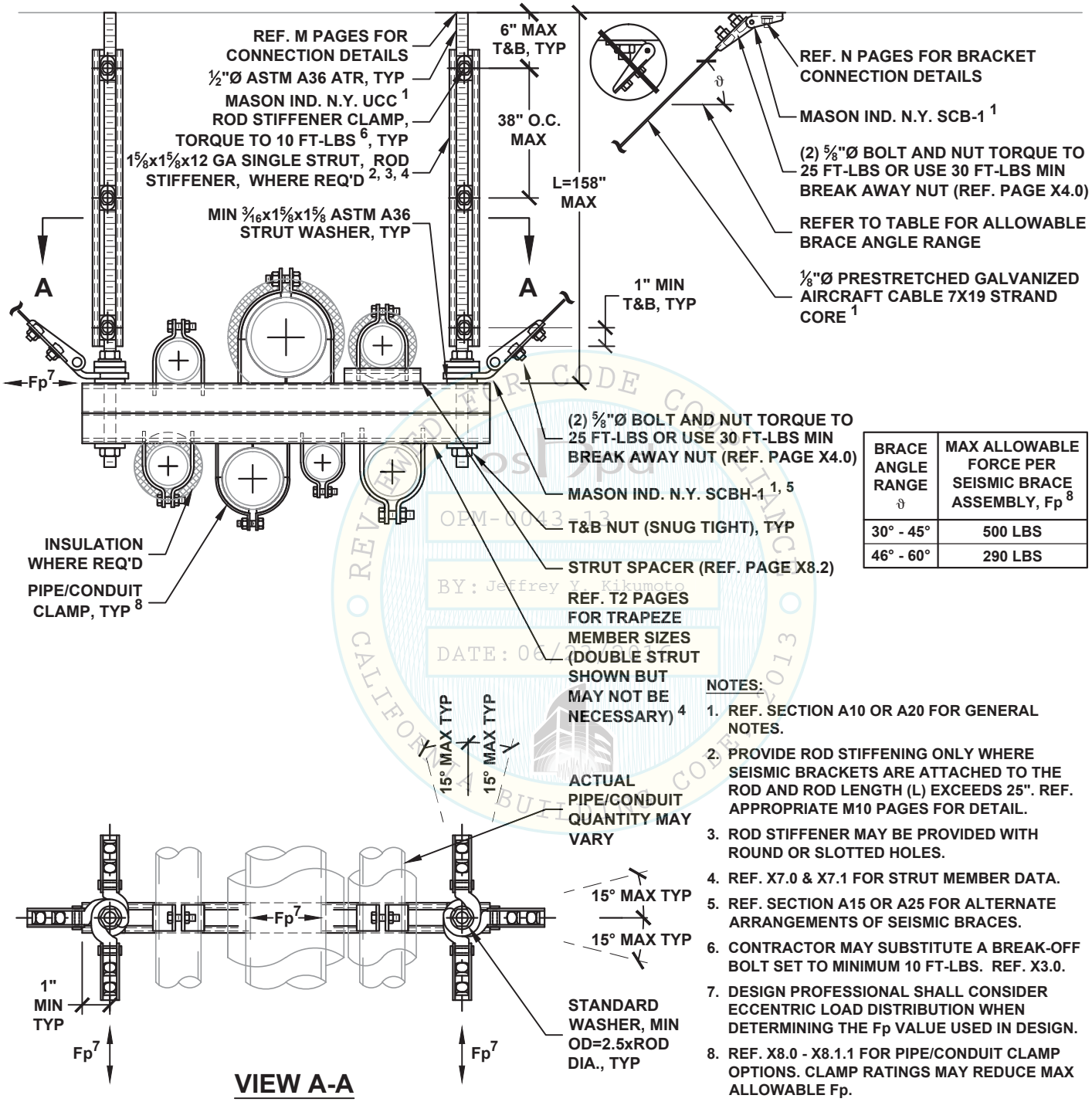

VIEW A-A

BRACE ANGLE RANGE ϑ	MAX ALLOWABLE FORCE PER SEISMIC BRACE ASSEMBLY, Fp 8
30° - 45°	500 LBS
46° - 60°	290 LBS

NOTES:

1. REF. SECTION A10 OR A20 FOR GENERAL NOTES.
2. PROVIDE ROD STIFFENING ONLY WHERE SEISMIC BRACKETS ARE ATTACHED TO THE ROD AND ROD LENGTH (L) EXCEEDS 25". REF. APPROPRIATE M10 PAGES FOR DETAIL.
3. ROD STIFFENER MAY BE PROVIDED WITH ROUND OR SLOTTED HOLES.
4. REF. X7.0 & X7.1 FOR STRUT MEMBER DATA.
5. REF. SECTION A15 OR A25 FOR ALTERNATE ARRANGEMENTS OF SEISMIC BRACES.
6. CONTRACTOR MAY SUBSTITUTE A BREAK-OFF BOLT SET TO MINIMUM 10 FT-LBS. REF. X3.0.
7. DESIGN PROFESSIONAL SHALL CONSIDER ECCENTRIC LOAD DISTRIBUTION WHEN DETERMINING THE Fp VALUE USED IN DESIGN.
8. REF. X8.0 - X8.1.1 FOR PIPE/CONDUIT CLAMP OPTIONS. CLAMP RATINGS MAY REDUCE MAX ALLOWABLE Fp.

REVIEWED FOR CODE COMPLIANCE
CALIFORNIA BUILDING CODE 2013
OPM-0043-13
BY: Jeffrey Y. Kikumoto
DATE: 06/23/2016

MASON WEST, INC.
1601 E. Miraloma Ave. Placentia, CA 92870
TEL (714) 630 - 0701, www.masonwest.com

Jiefu "Jeff" Zhang, SE
California SE No. S5270

PAGE
F2.22

HANGER ROD DIAMETER = 5/8"	PIPING/CONDUIT TRANSVERSE TRAPEZE SEISMIC CABLE BRACING SYSTEM 100 PLF MAX	KIT OPTIONS TC1T

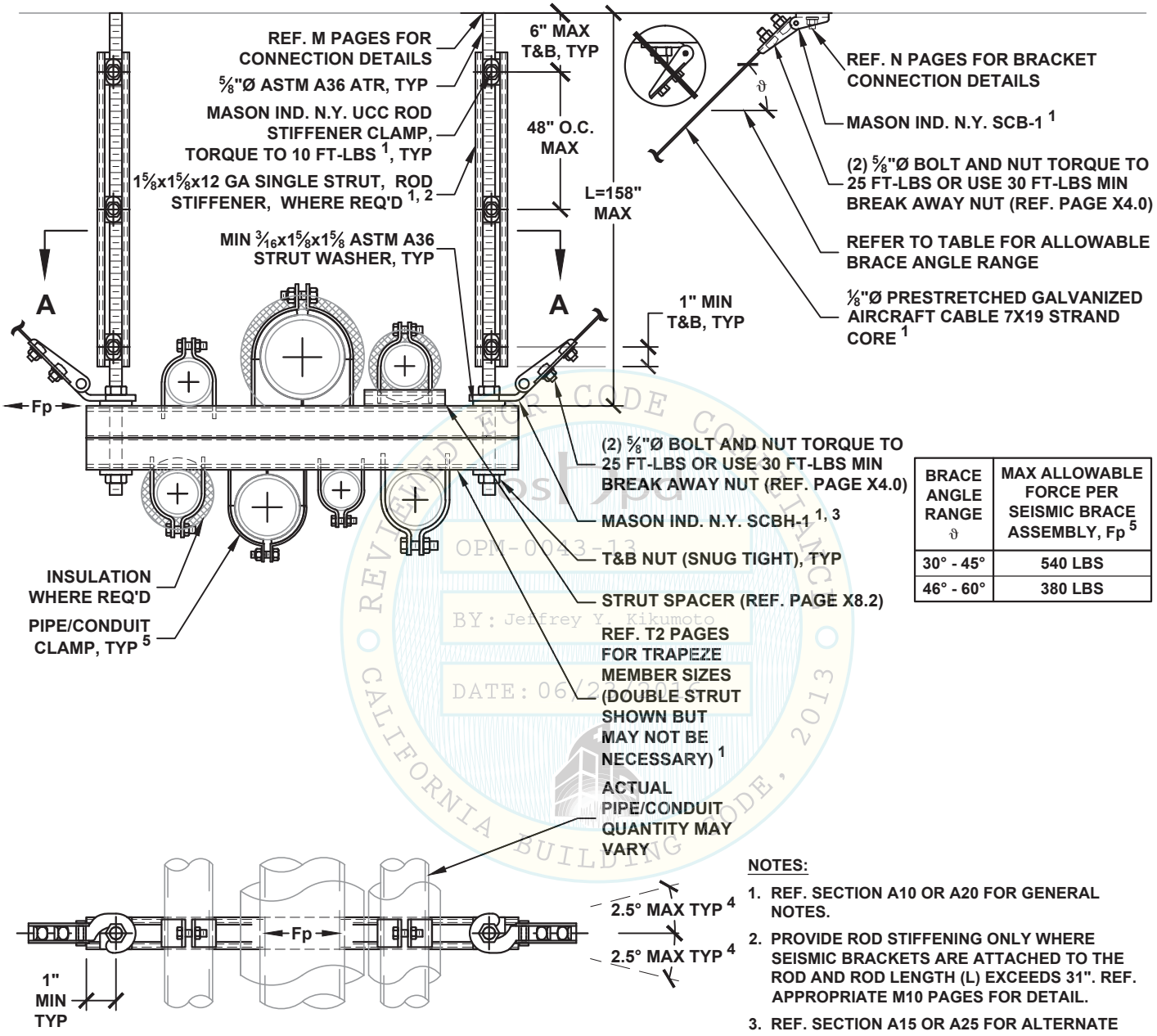

BRACE ANGLE RANGE ϑ	MAX ALLOWABLE FORCE PER SEISMIC BRACE ASSEMBLY, Fp 5
30° - 45°	540 LBS
46° - 60°	380 LBS

VIEW A-A

NOTES:

1. REF. SECTION A10 OR A20 FOR GENERAL NOTES.
2. PROVIDE ROD STIFFENING ONLY WHERE SEISMIC BRACKETS ARE ATTACHED TO THE ROD AND ROD LENGTH (L) EXCEEDS 31". REF. APPROPRIATE M10 PAGES FOR DETAIL.
3. REF. SECTION A15 OR A25 FOR ALTERNATE ARRANGEMENTS OF SEISMIC BRACES.
4. TO INCREASE ANGLE UP TO 15°, REF. PAGE A14.1 OR A24.2.
5. REF. X8.0 - X8.1.1 FOR PIPE/CONDUIT CLAMP OPTIONS. CLAMP RATINGS MAY REDUCE MAX ALLOWABLE Fp.

OSHPD PREAPPROVED OPM-0043-13 BY: Jeffrey Y. Kikumoto DATE: 06/23/2016 REVIEWED FOR CODE COMPLIANCE CALIFORNIA BUILDING CODE, 2013

MASON WEST, INC.
1601 E. Miraloma Ave. Placentia, CA 92870
TEL (714) 630 - 0701, www.masonwest.com

Jiefu "Jeff" Zhang, SE
California SE No. S5270

PAGE
F2.30

HANGER ROD DIAMETER = 5/8"	PIPING/CONDUIT LONGITUDINAL TRAPEZE SEISMIC CABLE BRACING SYSTEM 100 PLF MAX	KIT OPTIONS TC1L

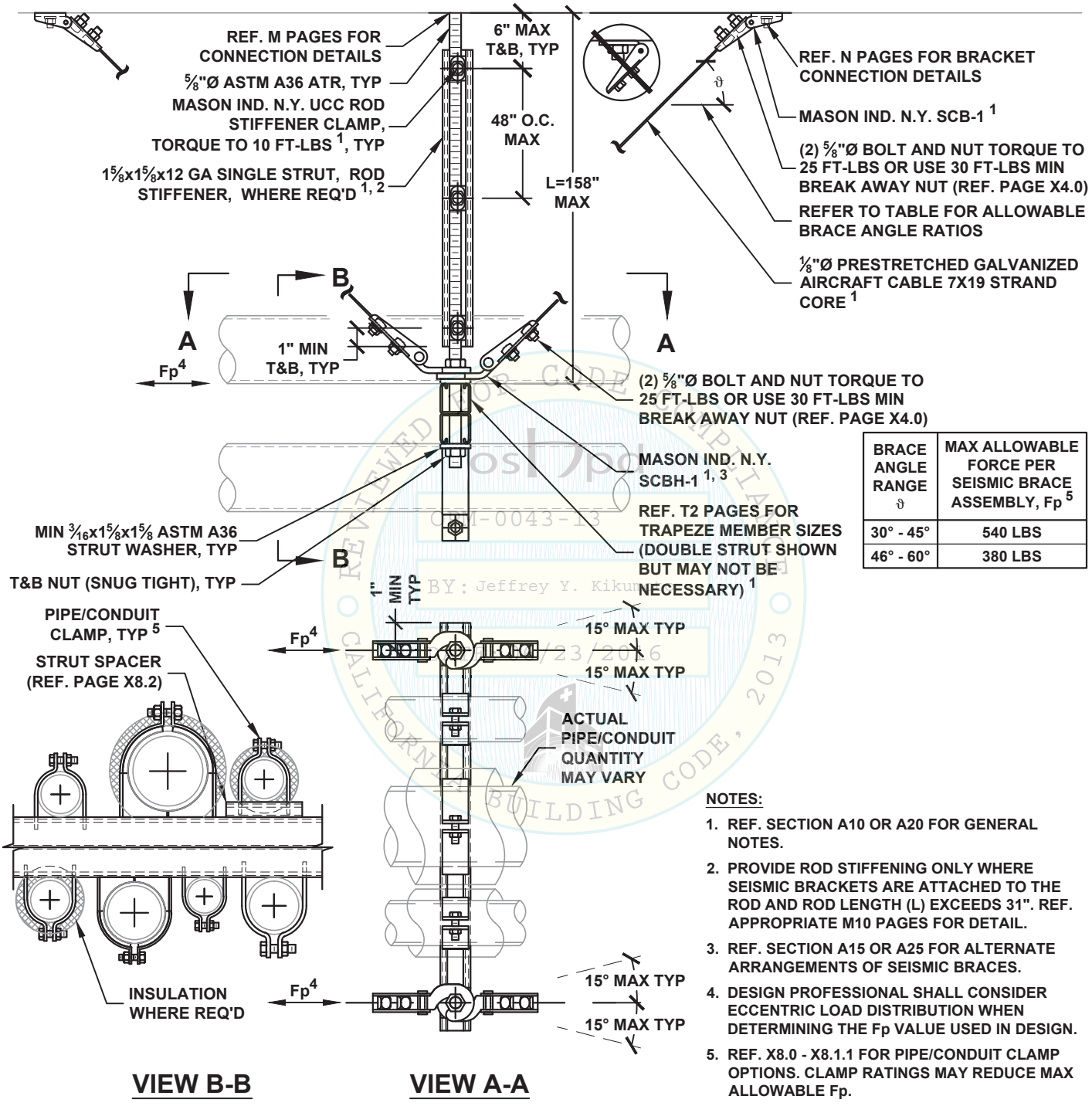

BRACE ANGLE RANGE ϑ	MAX ALLOWABLE FORCE PER SEISMIC BRACE ASSEMBLY, Fp 5
30° - 45°	540 LBS
46° - 60°	380 LBS

NOTES:

1. REF. SECTION A10 OR A20 FOR GENERAL NOTES.
2. PROVIDE ROD STIFFENING ONLY WHERE SEISMIC BRACKETS ARE ATTACHED TO THE ROD AND ROD LENGTH (L) EXCEEDS 31". REF. APPROPRIATE M10 PAGES FOR DETAIL.
3. REF. SECTION A15 OR A25 FOR ALTERNATE ARRANGEMENTS OF SEISMIC BRACES.
4. DESIGN PROFESSIONAL SHALL CONSIDER ECCENTRIC LOAD DISTRIBUTION WHEN DETERMINING THE Fp VALUE USED IN DESIGN.
5. REF. X8.0 - X8.1.1 FOR PIPE/CONDUIT CLAMP OPTIONS. CLAMP RATINGS MAY REDUCE MAX ALLOWABLE Fp.

REVIEWED FOR CODE COMPLIANCE
OPM-0043-13
BY: Jeffrey Y. Kikumoto
06/23/2016
CALIFORNIA BUILDING CODE, 2013

MASON WEST, INC.
1601 E. Miraloma Ave. Placentia, CA 92870
TEL (714) 630 - 0701, www.masonwest.com

Jiefu "Jeff" Zhang, SE
California SE No. S5270

PAGE
F2.31

HANGER ROD DIAMETER = 5/8"

PIPING/CONDUIT ALL-DIRECTIONAL TRAPEZE SEISMIC CABLE BRACING SYSTEM 100 PLF MAX

KIT OPTIONS
TC1A

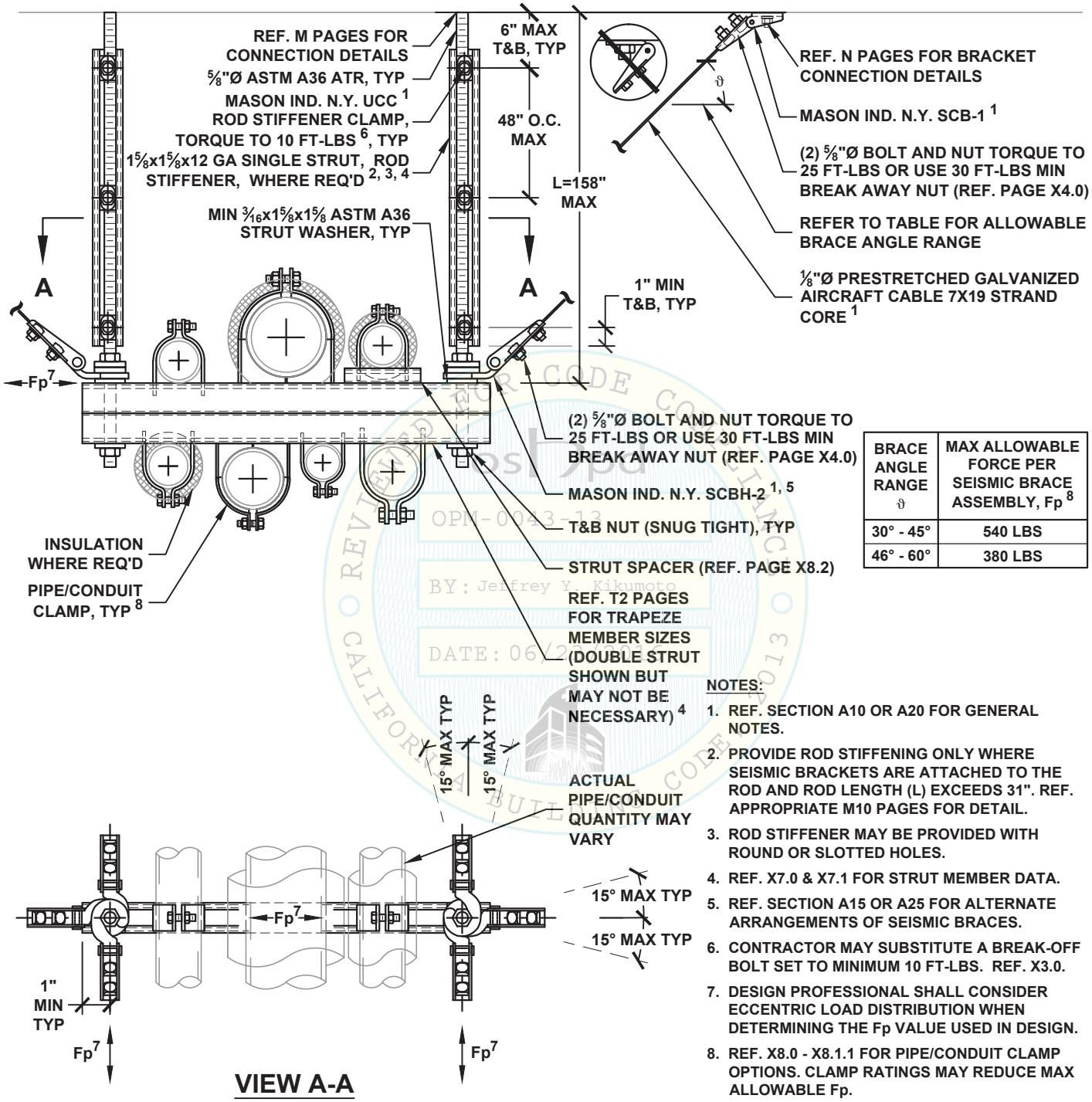

BRACE ANGLE RANGE ϑ	MAX ALLOWABLE FORCE PER SEISMIC BRACE ASSEMBLY, Fp 8
30° - 45°	540 LBS
46° - 60°	380 LBS

VIEW A-A

NOTES:

1. REF. SECTION A10 OR A20 FOR GENERAL NOTES.
2. PROVIDE ROD STIFFENING ONLY WHERE SEISMIC BRACKETS ARE ATTACHED TO THE ROD AND ROD LENGTH (L) EXCEEDS 31". REF. APPROPRIATE M10 PAGES FOR DETAIL.
3. ROD STIFFENER MAY BE PROVIDED WITH ROUND OR SLOTTED HOLES.
4. REF. X7.0 & X7.1 FOR STRUT MEMBER DATA.
5. REF. SECTION A15 OR A25 FOR ALTERNATE ARRANGEMENTS OF SEISMIC BRACES.
6. CONTRACTOR MAY SUBSTITUTE A BREAK-OFF BOLT SET TO MINIMUM 10 FT-LBS. REF. X3.0.
7. DESIGN PROFESSIONAL SHALL CONSIDER ECCENTRIC LOAD DISTRIBUTION WHEN DETERMINING THE Fp VALUE USED IN DESIGN.
8. REF. X8.0 - X8.1.1 FOR PIPE/CONDUIT CLAMP OPTIONS. CLAMP RATINGS MAY REDUCE MAX ALLOWABLE Fp.

REVIEWED FOR CODE COMPLIANCE
OPM-0043-13
BY: Jeffrey Y. Kikumoto
DATE: 06/23/2016
CALIFORNIA BUILDING CODE 2013

MASON WEST, INC.
1601 E. Miraloma Ave. Placentia, CA 92870
TEL (714) 630 - 0701, www.masonwest.com

Jiefu "Jeff" Zhang, SE
California SE No. S5270

HANGER ROD DIAMETER = ¾"

PIPING/CONDUIT TRANSVERSE TRAPEZE SEISMIC CABLE BRACING SYSTEM 150 PLF MAX

KIT OPTIONS
TC2T

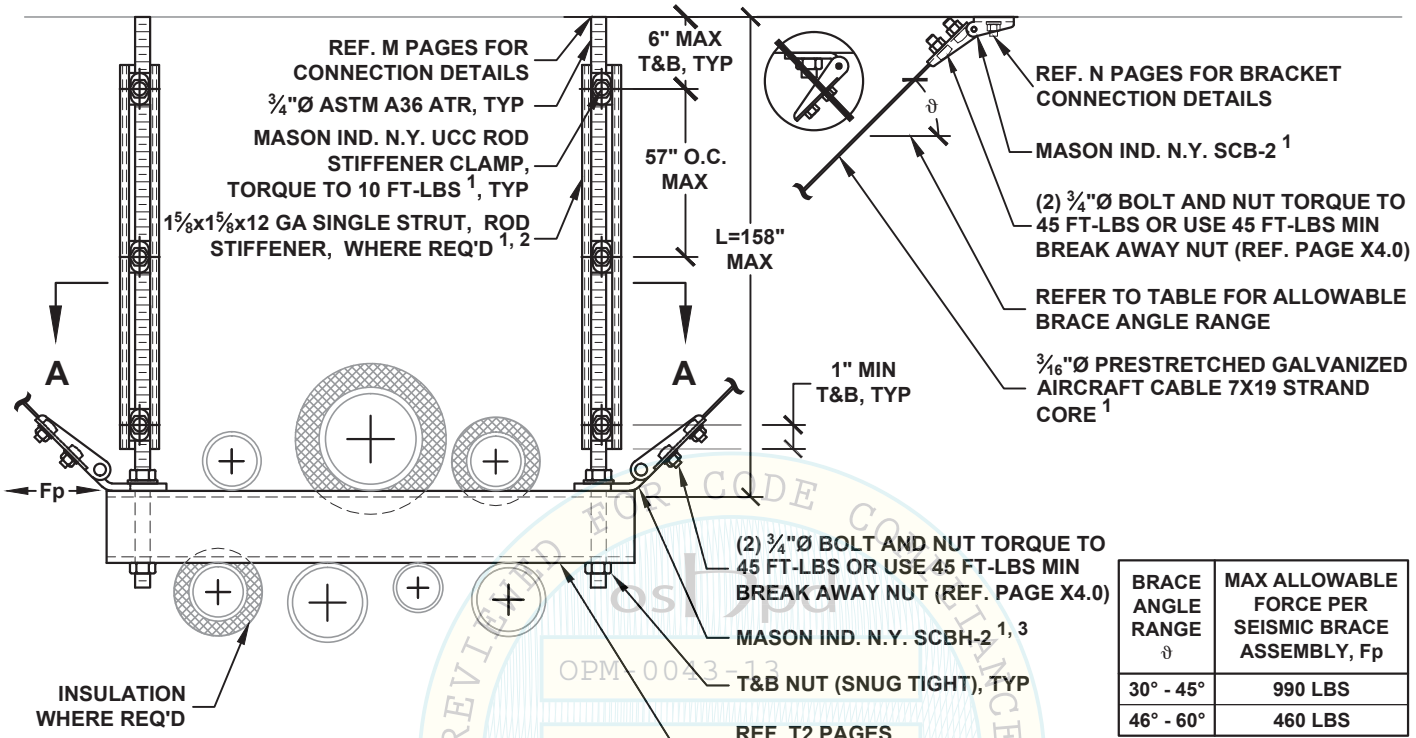

BRACE ANGLE RANGE ϑ	MAX ALLOWABLE FORCE PER SEISMIC BRACE ASSEMBLY, Fp
30° - 45°	990 LBS
46° - 60°	460 LBS

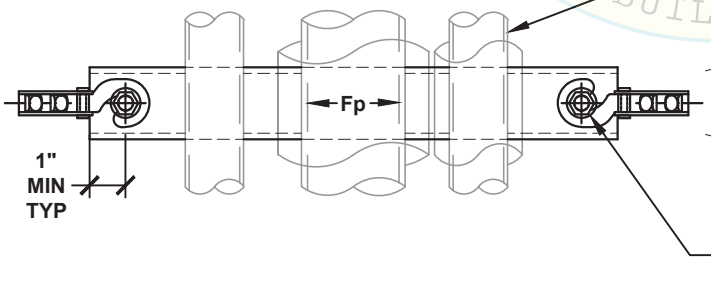

VIEW A-A

NOTES:

1. REF. SECTION A10 OR A20 FOR GENERAL NOTES.
2. PROVIDE ROD STIFFENING ONLY WHERE SEISMIC BRACKETS ARE ATTACHED TO THE ROD AND ROD LENGTH (L) EXCEEDS 37". REF. APPROPRIATE M10 PAGES FOR DETAIL.
3. REF. SECTION A15 OR A25 FOR ALTERNATE ARRANGEMENTS OF SEISMIC BRACES.
4. TO INCREASE ANGLE UP TO 15°, REF. PAGE A14.1 OR A24.2.
5. REF. SECTION A16 OR A26 FOR PIPE/CONDUIT ATTACHMENT OPTIONS.

OSHPD OPM-0043-13 BY: Jeffrey K DATE: 06/2 REVIEWED FOR CODE COMPLIANCE CALIFORNIA BUILDING CODE, 2013

MASON WEST, INC.
1601 E. Miraloma Ave. Placentia, CA 92870
TEL (714) 630 - 0701, www.masonwest.com

Jiefu "Jeff" Zhang, SE
California SE No. S5270

PAGE
F2.40

HANGER ROD DIAMETER = ¾"	PIPING/CONDUIT LONGITUDINAL TRAPEZE SEISMIC CABLE BRACING SYSTEM 150 PLF MAX	KIT OPTIONS TC2L

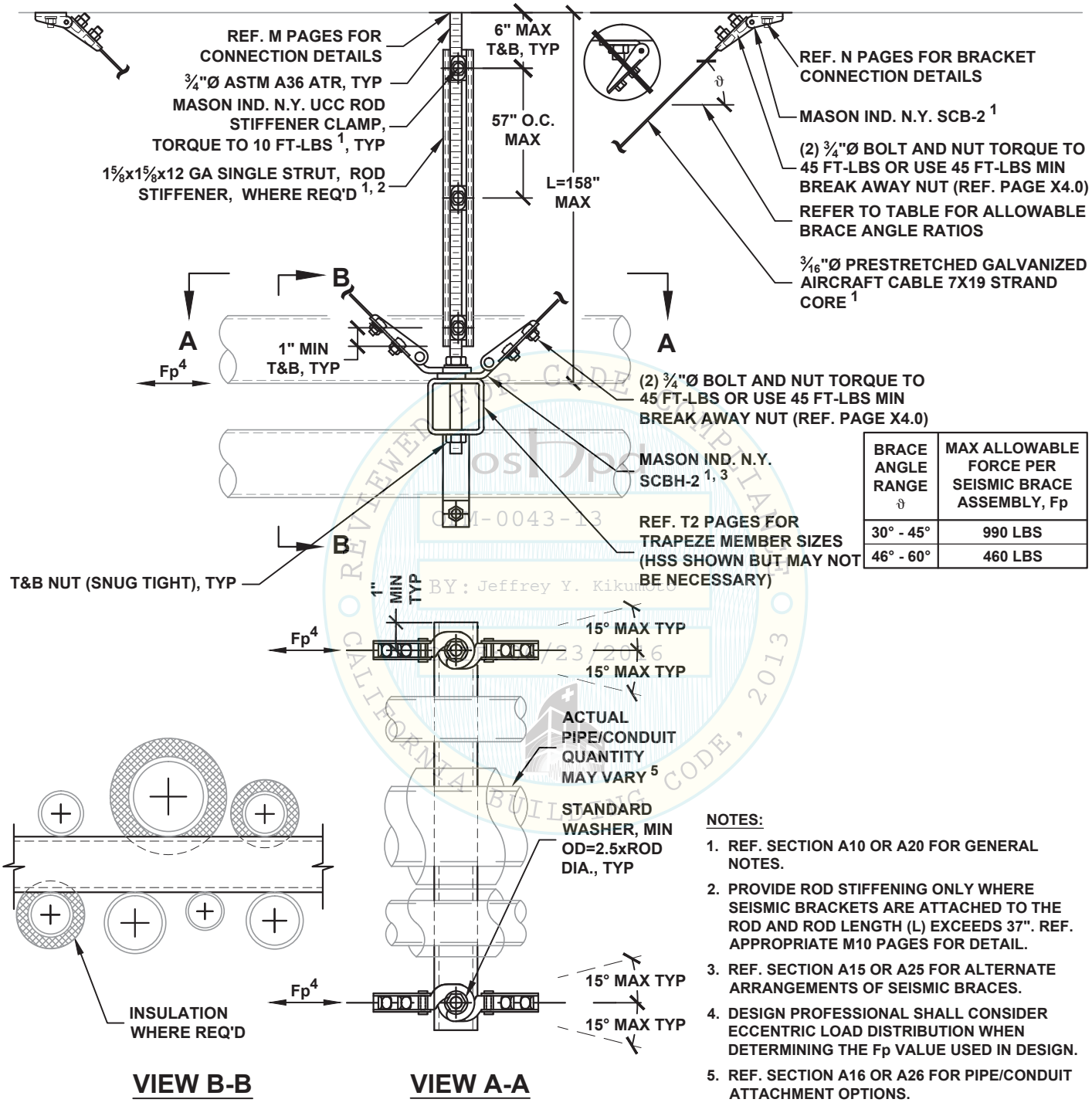

BRACE ANGLE RANGE ϑ	MAX ALLOWABLE FORCE PER SEISMIC BRACE ASSEMBLY, Fp
30° - 45°	990 LBS
46° - 60°	460 LBS

NOTES:

1. REF. SECTION A10 OR A20 FOR GENERAL NOTES.
2. PROVIDE ROD STIFFENING ONLY WHERE SEISMIC BRACKETS ARE ATTACHED TO THE ROD AND ROD LENGTH (L) EXCEEDS 37". REF. APPROPRIATE M10 PAGES FOR DETAIL.
3. REF. SECTION A15 OR A25 FOR ALTERNATE ARRANGEMENTS OF SEISMIC BRACES.
4. DESIGN PROFESSIONAL SHALL CONSIDER ECCENTRIC LOAD DISTRIBUTION WHEN DETERMINING THE Fp VALUE USED IN DESIGN.
5. REF. SECTION A16 OR A26 FOR PIPE/CONDUIT ATTACHMENT OPTIONS.

OSHPD OPM-0043-13 REVIEWED FOR CODE COMPLIANCE BY: Jeffrey Y. Kikumoto 06/23/2016 CALIFORNIA BUILDING CODE, 2013

MASON WEST, INC.
1601 E. Miraloma Ave. Placentia, CA 92870
TEL (714) 630 - 0701, www.masonwest.com

Jiefu "Jeff" Zhang, SE
California SE No. S5270

PAGE **F2.41**

HANGER ROD DIAMETER = ¾"

PIPING/CONDUIT ALL-DIRECTIONAL TRAPEZE SEISMIC CABLE BRACING SYSTEM 150 PLF MAX

KIT OPTIONS
TC2A

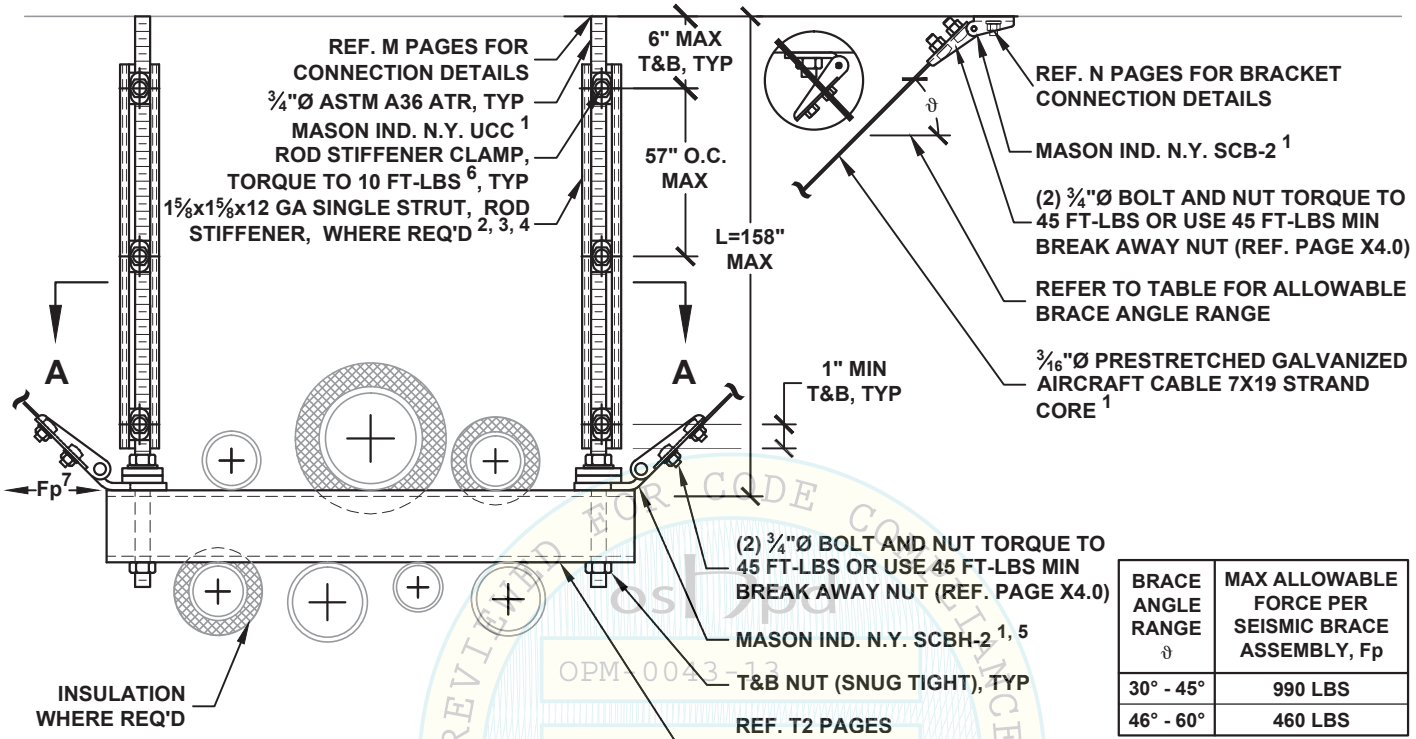

BRACE ANGLE RANGE ϑ	MAX ALLOWABLE FORCE PER SEISMIC BRACE ASSEMBLY, Fp
30° - 45°	990 LBS
46° - 60°	460 LBS

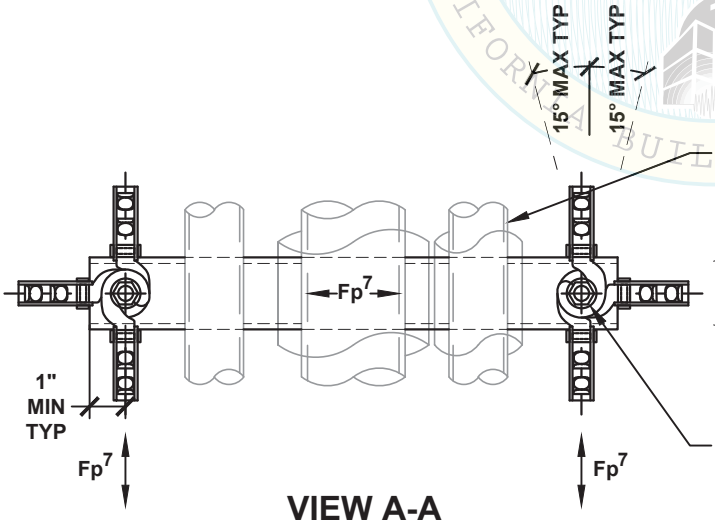

VIEW A-A

NOTES:

1. REF. SECTION A10 OR A20 FOR GENERAL NOTES.
2. PROVIDE ROD STIFFENING ONLY WHERE SEISMIC BRACKETS ARE ATTACHED TO THE ROD AND ROD LENGTH (L) EXCEEDS 37". REF. APPROPRIATE M10 PAGES FOR DETAIL.
3. ROD STIFFENER MAY BE PROVIDED WITH ROUND OR SLOTTED HOLES.
4. REF. X7.0 & X7.1 FOR STRUT MEMBER DATA.
5. REF. SECTION A15 OR A25 FOR ALTERNATE ARRANGEMENTS OF SEISMIC BRACES.
6. CONTRACTOR MAY SUBSTITUTE A BREAK-OFF BOLT SET TO MINIMUM 10 FT-LBS. REF. X3.0.
7. DESIGN PROFESSIONAL SHALL CONSIDER ECCENTRIC LOAD DISTRIBUTION WHEN DETERMINING THE Fp VALUE USED IN DESIGN.
8. REF. SECTION A16 OR A26 FOR PIPE/CONDUIT ATTACHMENT OPTIONS.

OSHPD OPM-0043-13 BY: Jeffrey Kikumoto DATE: 06/23/2016 REVIEWED FOR CODE COMPLIANCE CALIFORNIA BUILDING CODE 2013

MASON WEST, INC.
1601 E. Miraloma Ave. Placentia, CA 92870
TEL (714) 630 - 0701, www.masonwest.com

Jiefu "Jeff" Zhang, SE
California SE No. S5270

PAGE
F2.42

HANGER ROD DIAMETER = ⅜"

PIPING/CONDUIT X-PATTERN TRAPEZE SEISMIC CABLE BRACING SYSTEM 30 PLF MAX

KIT OPTIONS
TC0X

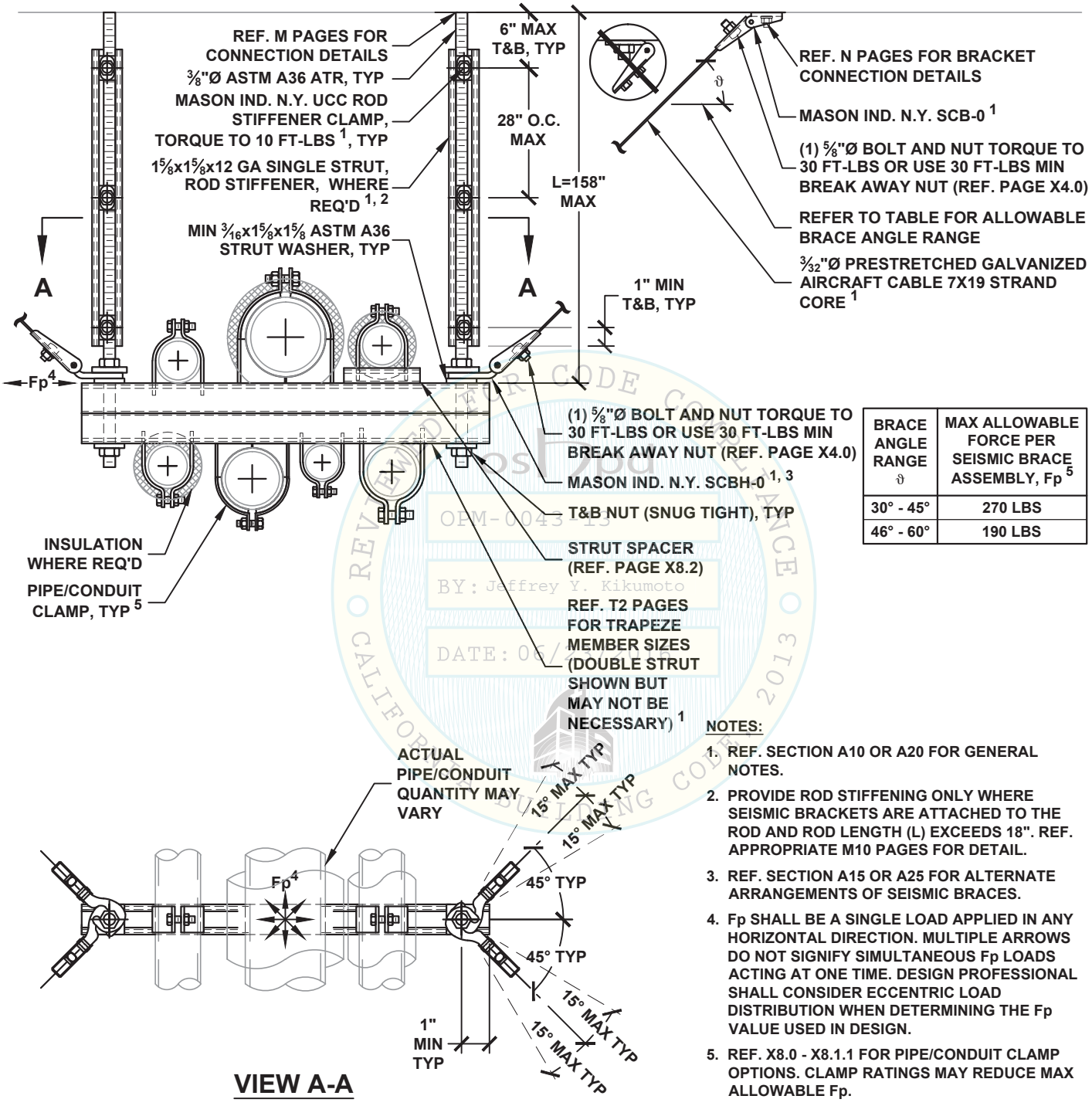

BRACE ANGLE RANGE ϑ	MAX ALLOWABLE FORCE PER SEISMIC BRACE ASSEMBLY, Fp 5
30° - 45°	270 LBS
46° - 60°	190 LBS

VIEW A-A

NOTES:

1. REF. SECTION A10 OR A20 FOR GENERAL NOTES.
2. PROVIDE ROD STIFFENING ONLY WHERE SEISMIC BRACKETS ARE ATTACHED TO THE ROD AND ROD LENGTH (L) EXCEEDS 18". REF. APPROPRIATE M10 PAGES FOR DETAIL.
3. REF. SECTION A15 OR A25 FOR ALTERNATE ARRANGEMENTS OF SEISMIC BRACES.
4. Fp SHALL BE A SINGLE LOAD APPLIED IN ANY HORIZONTAL DIRECTION. MULTIPLE ARROWS DO NOT SIGNIFY SIMULTANEOUS Fp LOADS ACTING AT ONE TIME. DESIGN PROFESSIONAL SHALL CONSIDER ECCENTRIC LOAD DISTRIBUTION WHEN DETERMINING THE Fp VALUE USED IN DESIGN.
5. REF. X8.0 - X8.1.1 FOR PIPE/CONDUIT CLAMP OPTIONS. CLAMP RATINGS MAY REDUCE MAX ALLOWABLE Fp.

OPM-0043-13
BY: Jeffrey Y. Kikumoto
DATE: 06/
REVIEWED FOR CODE COMPLIANCE
CALIFORNIA BUILDING CODE 2013

MASON WEST, INC.
1601 E. Miraloma Ave. Placentia, CA 92870
TEL (714) 630 - 0701, www.masonwest.com

Jiefu "Jeff" Zhang, SE
California SE No. S5270

PAGE
F3.10

HANGER ROD DIAMETER = ½"

PIPING/CONDUIT X-PATTERN TRAPEZE SEISMIC CABLE BRACING SYSTEM 60 PLF MAX

KIT OPTIONS
TC1X

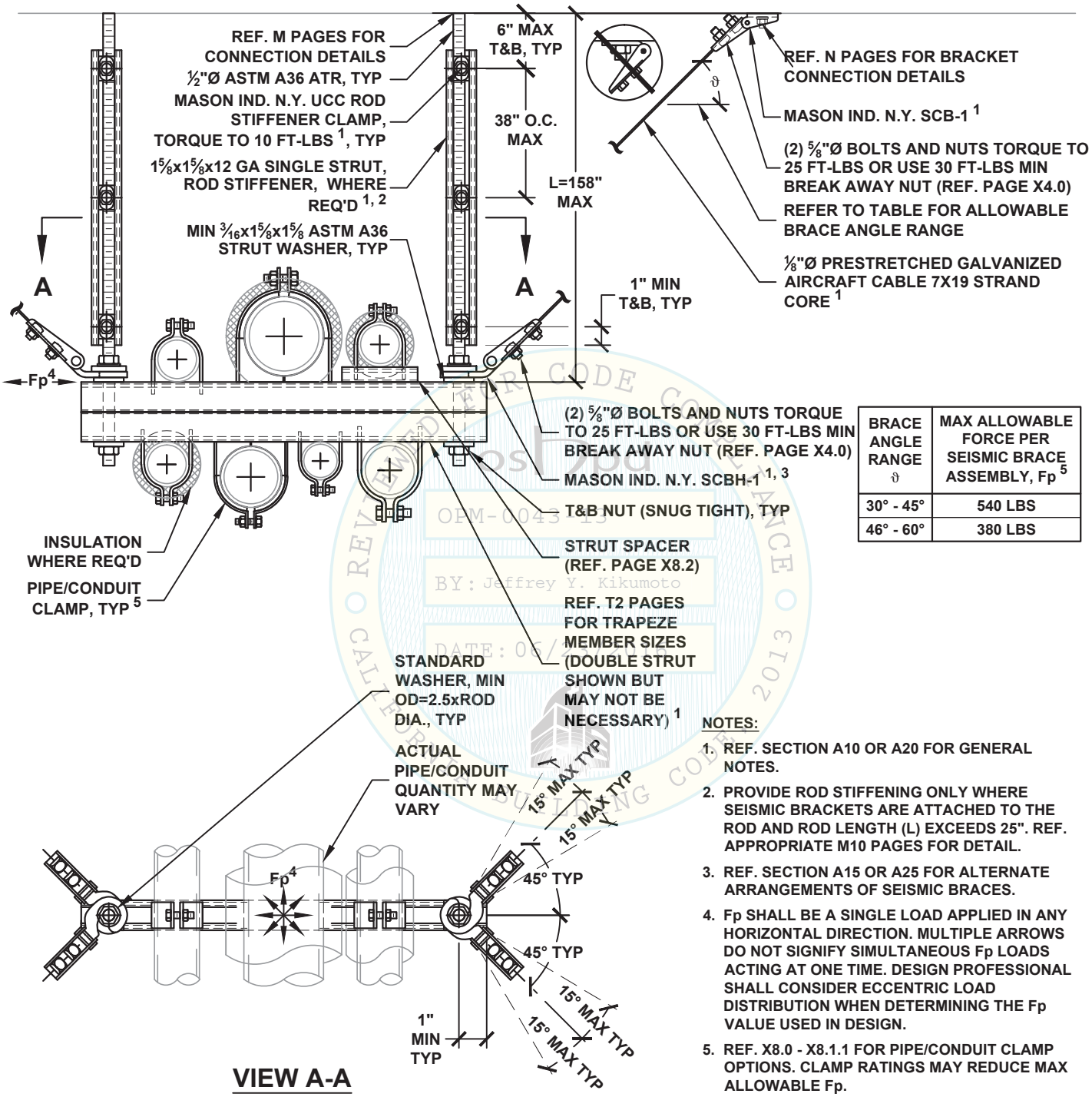

BRACE ANGLE RANGE ϑ	MAX ALLOWABLE FORCE PER SEISMIC BRACE ASSEMBLY, Fp [5]
30° - 45°	540 LBS
46° - 60°	380 LBS

VIEW A-A

NOTES:

1. REF. SECTION A10 OR A20 FOR GENERAL NOTES.
2. PROVIDE ROD STIFFENING ONLY WHERE SEISMIC BRACKETS ARE ATTACHED TO THE ROD AND ROD LENGTH (L) EXCEEDS 25". REF. APPROPRIATE M10 PAGES FOR DETAIL.
3. REF. SECTION A15 OR A25 FOR ALTERNATE ARRANGEMENTS OF SEISMIC BRACES.
4. Fp SHALL BE A SINGLE LOAD APPLIED IN ANY HORIZONTAL DIRECTION. MULTIPLE ARROWS DO NOT SIGNIFY SIMULTANEOUS Fp LOADS ACTING AT ONE TIME. DESIGN PROFESSIONAL SHALL CONSIDER ECCENTRIC LOAD DISTRIBUTION WHEN DETERMINING THE Fp VALUE USED IN DESIGN.
5. REF. X8.0 - X8.1.1 FOR PIPE/CONDUIT CLAMP OPTIONS. CLAMP RATINGS MAY REDUCE MAX ALLOWABLE Fp.

CALIFORNIA BUILDING CODE 2013 COMPLIANCE
OSHPD
OPM-0043-13
BY: Jeffrey Y. Kikumoto
DATE: 06/

MASON WEST, INC.
1601 E. Miraloma Ave. Placentia, CA 92870
TEL (714) 630 - 0701, www.masonwest.com

Jiefu "Jeff" Zhang, SE
California SE No. S5270

PAGE
F3.11

HANGER ROD DIAMETER = 5/8"	PIPING/CONDUIT X-PATTERN TRAPEZE SEISMIC CABLE BRACING SYSTEM 100 PLF MAX	KIT OPTIONS TC1X

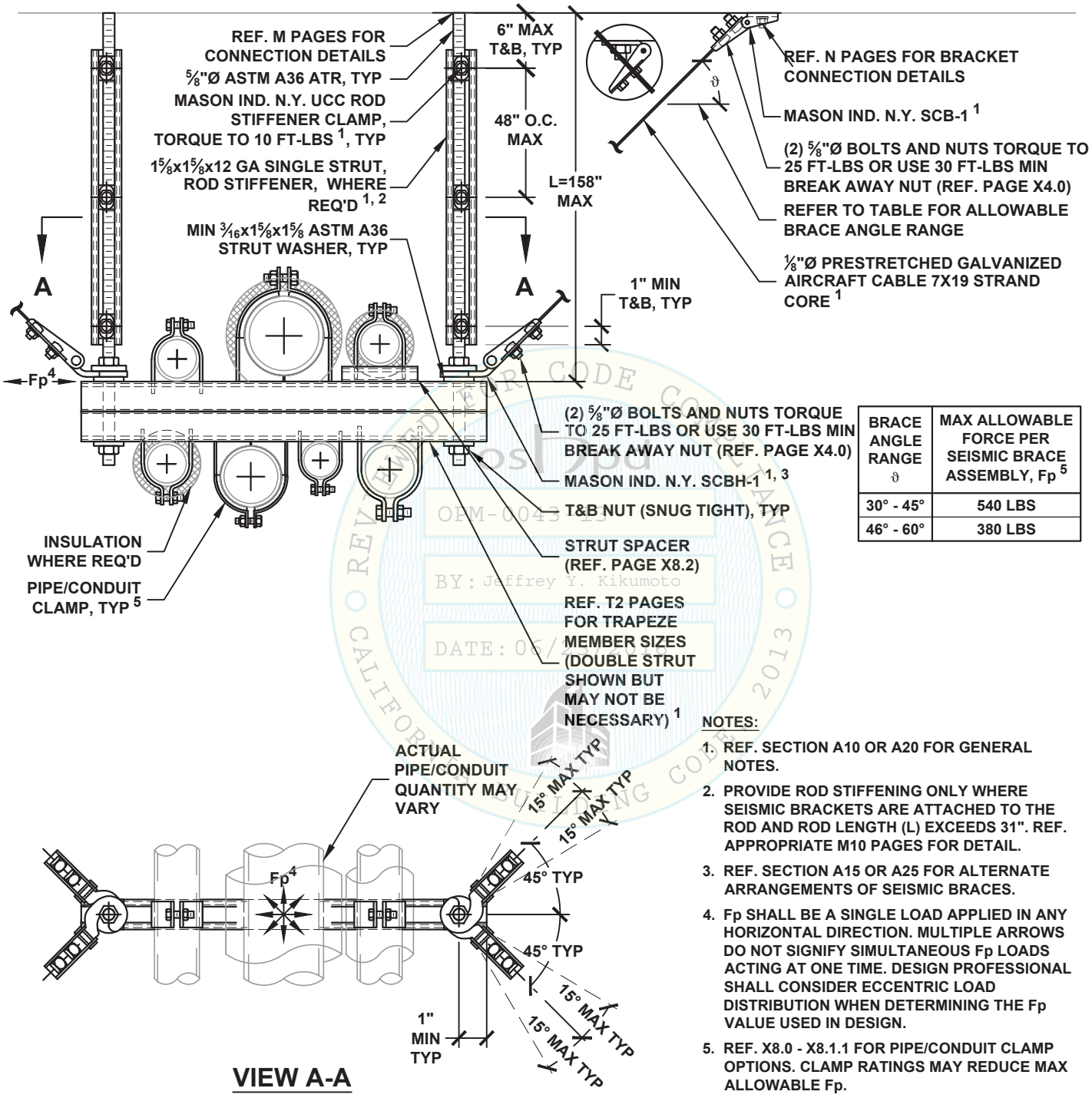

VIEW A-A

BRACE ANGLE RANGE ϑ	MAX ALLOWABLE FORCE PER SEISMIC BRACE ASSEMBLY, Fp 5
30° - 45°	540 LBS
46° - 60°	380 LBS

NOTES:

1. REF. SECTION A10 OR A20 FOR GENERAL NOTES.
2. PROVIDE ROD STIFFENING ONLY WHERE SEISMIC BRACKETS ARE ATTACHED TO THE ROD AND ROD LENGTH (L) EXCEEDS 31". REF. APPROPRIATE M10 PAGES FOR DETAIL.
3. REF. SECTION A15 OR A25 FOR ALTERNATE ARRANGEMENTS OF SEISMIC BRACES.
4. Fp SHALL BE A SINGLE LOAD APPLIED IN ANY HORIZONTAL DIRECTION. MULTIPLE ARROWS DO NOT SIGNIFY SIMULTANEOUS Fp LOADS ACTING AT ONE TIME. DESIGN PROFESSIONAL SHALL CONSIDER ECCENTRIC LOAD DISTRIBUTION WHEN DETERMINING THE Fp VALUE USED IN DESIGN.
5. REF. X8.0 - X8.1.1 FOR PIPE/CONDUIT CLAMP OPTIONS. CLAMP RATINGS MAY REDUCE MAX ALLOWABLE Fp.

OSHPD OPM-0043-13 BY: Jeffrey Y. Kikumoto DATE: 06/23/2016 REVIEWED FOR CODE COMPLIANCE CALIFORNIA BUILDING CODE 2013

MASON WEST, INC.
1601 E. Miraloma Ave. Placentia, CA 92870
TEL (714) 630 - 0701, www.masonwest.com

Jiefu "Jeff" Zhang, SE
California SE No. S5270

PAGE
F3.12

HANGER ROD DIAMETER = ¾"	PIPING/CONDUIT X-PATTERN TRAPEZE SEISMIC CABLE BRACING SYSTEM 150 PLF MAX	KIT OPTIONS TC2X

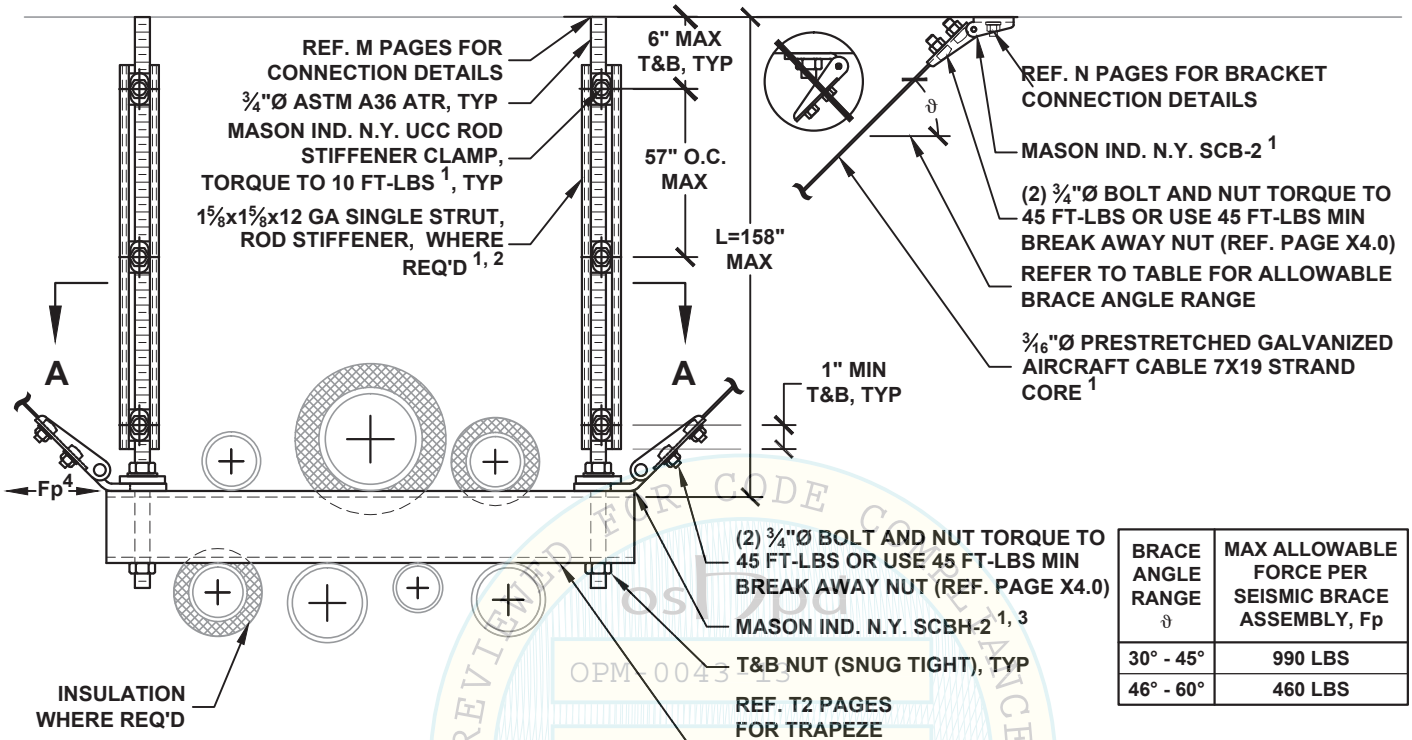

BRACE ANGLE RANGE ϑ	MAX ALLOWABLE FORCE PER SEISMIC BRACE ASSEMBLY, Fp
30° - 45°	990 LBS
46° - 60°	460 LBS

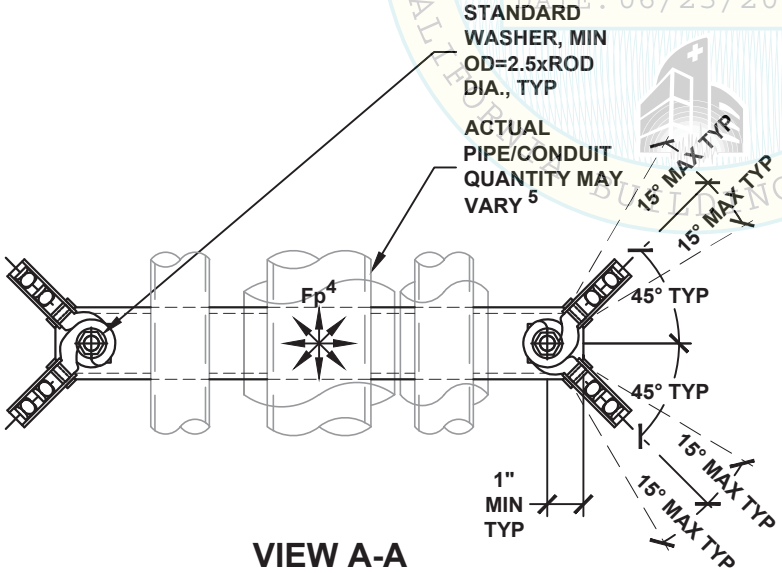

VIEW A-A

NOTES:

1. REF. SECTION A10 OR A20 FOR GENERAL NOTES.
2. PROVIDE ROD STIFFENING ONLY WHERE SEISMIC BRACKETS ARE ATTACHED TO THE ROD AND ROD LENGTH (L) EXCEEDS 37". REF. APPROPRIATE M10 PAGES FOR DETAIL.
3. REF. SECTION A15 OR A25 FOR ALTERNATE ARRANGEMENTS OF SEISMIC BRACES.
4. Fp SHALL BE A SINGLE LOAD APPLIED IN ANY HORIZONTAL DIRECTION. MULTIPLE ARROWS DO NOT SIGNIFY SIMULTANEOUS Fp LOADS ACTING AT ONE TIME. DESIGN PROFESSIONAL SHALL CONSIDER ECCENTRIC LOAD DISTRIBUTION WHEN DETERMINING THE Fp VALUE USED IN DESIGN.
5. REF. SECTION A16 OR A26 FOR PIPE/CONDUIT ATTACHMENT OPTIONS

OSHPD
OPM-0043-13
BY: Jeffrey
DATE: 06/23/2016
REVIEWED FOR CODE COMPLIANCE
CALIFORNIA BUILDING CODE, 2013

MASON WEST, INC.
1601 E. Miraloma Ave. Placentia, CA 92870
TEL (714) 630 - 0701, www.masonwest.com

Jiefu "Jeff" Zhang, SE
California SE No. S5270

PAGE
F3.13

HANGER ROD DIAMETER = ⅜"

PIPING/CONDUIT TRANSVERSE TRAPEZE SEISMIC SOLID BRACING SYSTEM 30 PLF MAX

KIT OPTIONS
TW38T

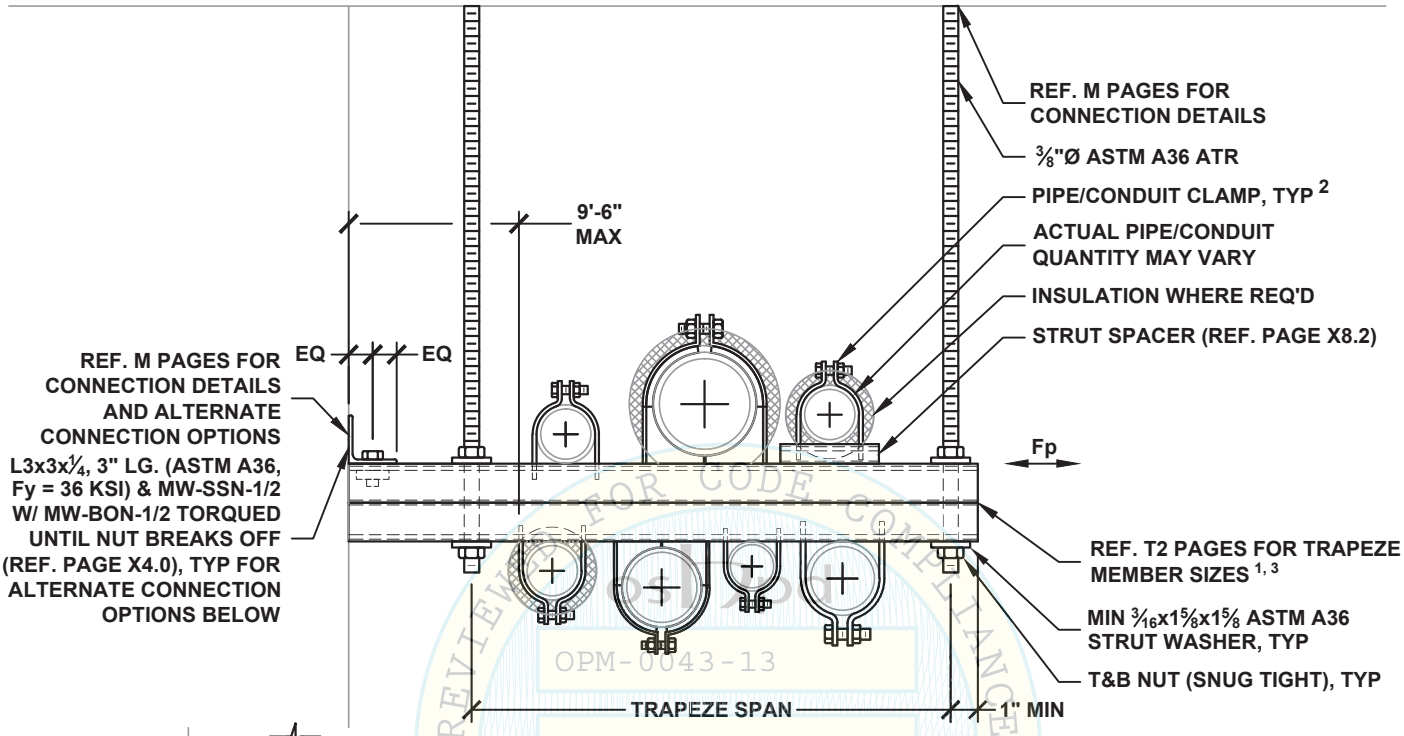

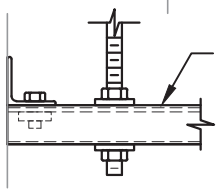

OPTION 1: SINGLE STRUT TRAPEZE

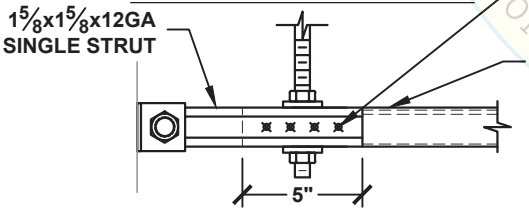

OPTION 2: SINGLE STRUT TRAPEZE

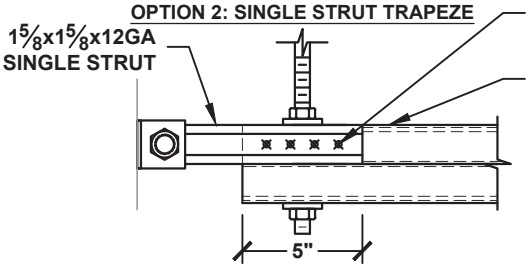

OPTION 3: DOUBLE STRUT TRAPEZE

MAX ALLOWABLE FORCE PER SEISMIC BRACE ASSEMBLY, Fp 2
670 LBS

NOTES:

1. TRAPEZE MEMBER MAY BE PROVIDED WITH ROUND HOLES SIZED FOR HANGER RODS. REF. X7.0 & X7.1 FOR STRUT MEMBER DATA.
2. REF. X8.0 - X8.1.1 FOR PIPE/CONDUIT CLAMP OPTIONS. CLAMP RATINGS MAY REDUCE MAX ALLOWABLE Fp.
3. DOUBLE STRUT TRAPEZE OPTION SHOWN MAY NOT BE NECESSARY.
4. SEPARATE LONGITUDINAL BRACING SHALL BE PROVIDED FOR THE PIPE/CONDUIT RUN AS DISCUSSED IN SECTION A10.

OPM-0043-13
BY: Jeffrey Y. Kikumoto
DATE: 06/23/2016
REVIEWED FOR CODE COMPLIANCE
CALIFORNIA BUILDING CODE, 2013

MASON WEST, INC.
1601 E. Miraloma Ave. Placentia, CA 92870
TEL (714) 630 - 0701, www.masonwest.com

Jiefu "Jeff" Zhang, SE
California SE No. S5270

PAGE
F4.10

HANGER ROD DIAMETER = 3/8"	PIPING/CONDUIT ALL-DIRECTIONAL TRAPEZE SEISMIC SOLID BRACING SYSTEM 30 PLF MAX	KIT OPTIONS TW38A

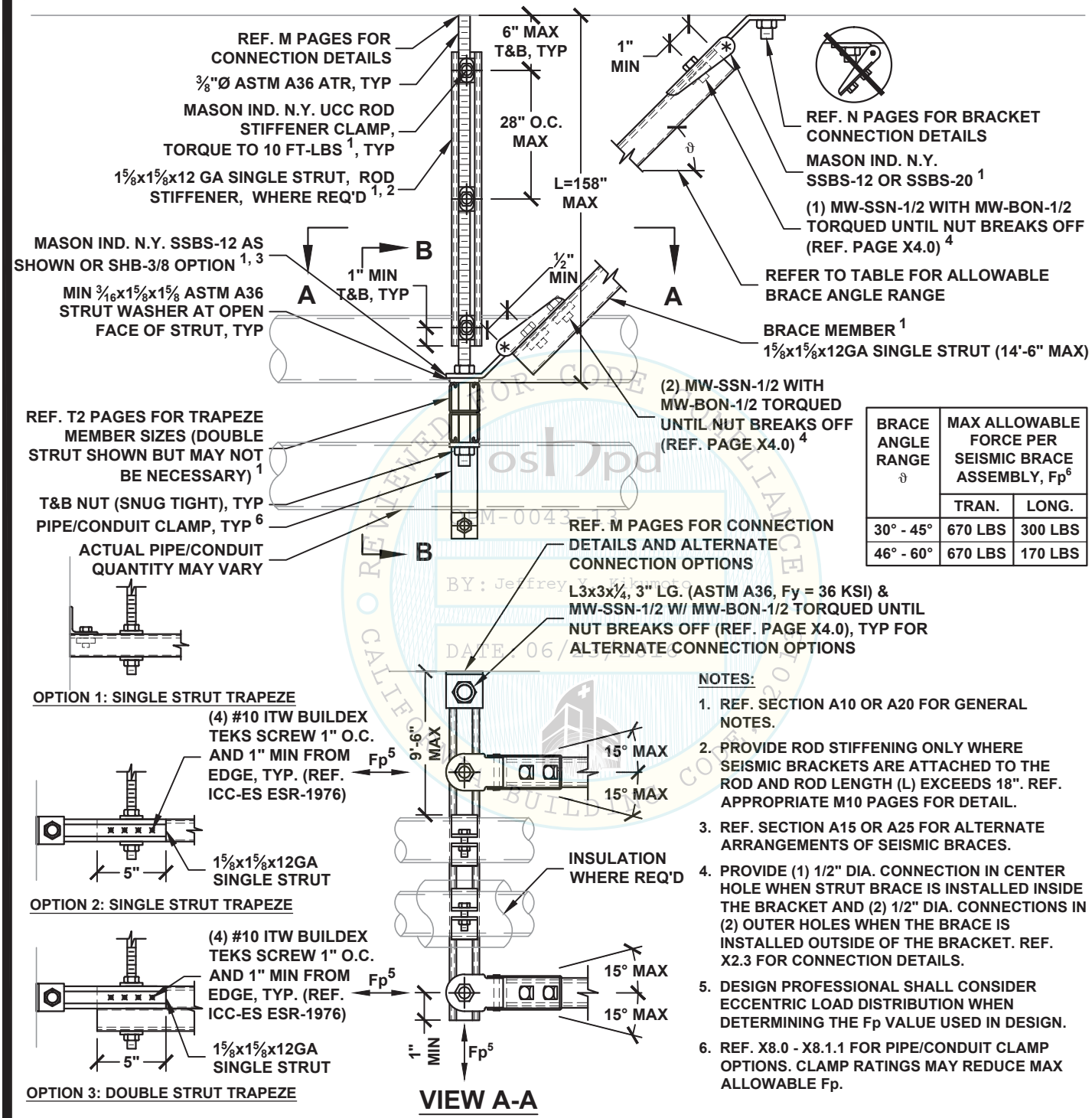

BRACE ANGLE RANGE ϑ	MAX ALLOWABLE FORCE PER SEISMIC BRACE ASSEMBLY, Fp[6]	
	TRAN.	LONG.
30° - 45°	670 LBS	300 LBS
46° - 60°	670 LBS	170 LBS

NOTES:

1. REF. SECTION A10 OR A20 FOR GENERAL NOTES.
2. PROVIDE ROD STIFFENING ONLY WHERE SEISMIC BRACKETS ARE ATTACHED TO THE ROD AND ROD LENGTH (L) EXCEEDS 18". REF. APPROPRIATE M10 PAGES FOR DETAIL.
3. REF. SECTION A15 OR A25 FOR ALTERNATE ARRANGEMENTS OF SEISMIC BRACES.
4. PROVIDE (1) 1/2" DIA. CONNECTION IN CENTER HOLE WHEN STRUT BRACE IS INSTALLED INSIDE THE BRACKET AND (2) 1/2" DIA. CONNECTIONS IN (2) OUTER HOLES WHEN THE BRACE IS INSTALLED OUTSIDE OF THE BRACKET. REF. X2.3 FOR CONNECTION DETAILS.
5. DESIGN PROFESSIONAL SHALL CONSIDER ECCENTRIC LOAD DISTRIBUTION WHEN DETERMINING THE Fp VALUE USED IN DESIGN.
6. REF. X8.0 - X8.1.1 FOR PIPE/CONDUIT CLAMP OPTIONS. CLAMP RATINGS MAY REDUCE MAX ALLOWABLE Fp.

MASON WEST, INC.
1601 E. Miraloma Ave. Placentia, CA 92870
TEL (714) 630 - 0701, www.masonwest.com

Jiefu "Jeff" Zhang, SE
California SE No. S5270

PAGE **F4.12**

OSHPD PREAPPROVED FOR CODE COMPLIANCE OPM-0043-13 BY: Jeffrey Y. Kikumoto DATE: 06/23/2016 CALIFORNIA BUILDING CODE COMPLIANCE

HANGER ROD DIAMETER = ½"	PIPING/CONDUIT TRANSVERSE TRAPEZE SEISMIC SOLID BRACING SYSTEM 50 PLF MAX	KIT OPTIONS TW50T

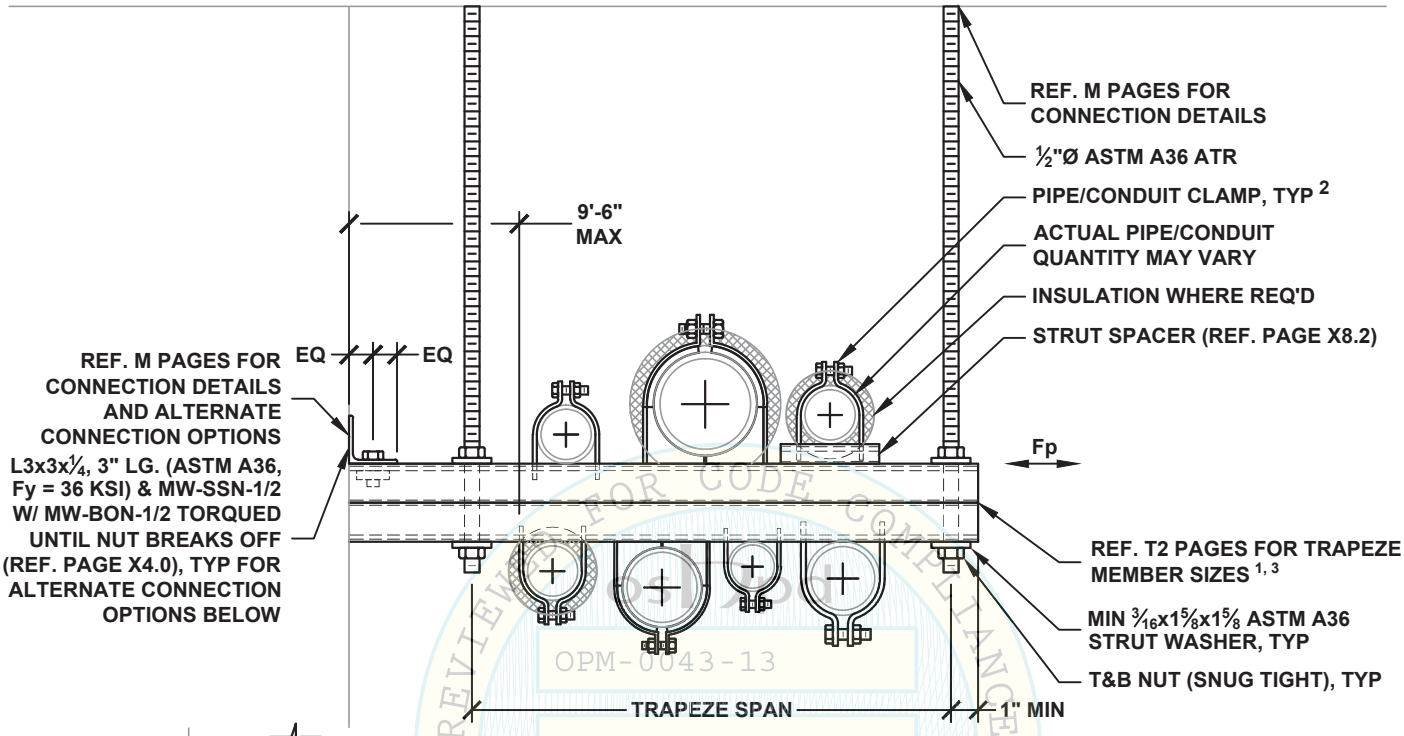

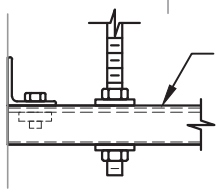

OPTION 1: SINGLE STRUT TRAPEZE

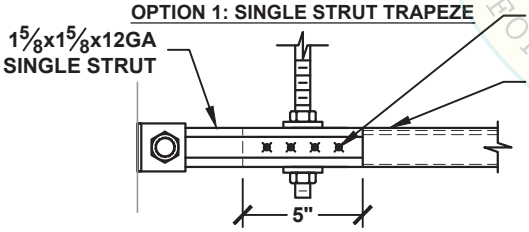

OPTION 2: SINGLE STRUT TRAPEZE

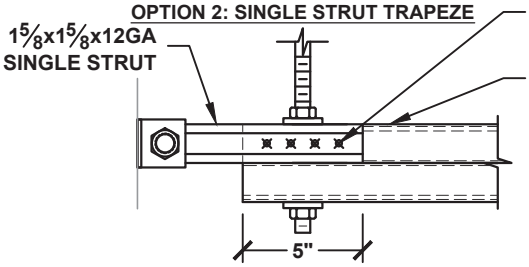

OPTION 3: DOUBLE STRUT TRAPEZE

MAX ALLOWABLE FORCE PER SEISMIC BRACE ASSEMBLY, Fp 2
670 LBS

NOTES:

1. TRAPEZE MEMBER MAY BE PROVIDED WITH ROUND HOLES SIZED FOR HANGER RODS. REF. X7.0 & X7.1 FOR STRUT MEMBER DATA.
2. REF. X8.0 - X8.1.1 FOR PIPE/CONDUIT CLAMP OPTIONS. CLAMP RATINGS MAY REDUCE MAX ALLOWABLE Fp.
3. DOUBLE STRUT TRAPEZE OPTION SHOWN MAY NOT BE NECESSARY.
4. SEPARATE LONGITUDINAL BRACING SHALL BE PROVIDED FOR THE PIPE/CONDUIT RUN AS DISCUSSED IN SECTION A10.

OPM-0043-13
BY: Jeffrey Y. Kikumoto
DATE: 06/23/2016
REVIEWED FOR CODE COMPLIANCE
CALIFORNIA BUILDING CODE, 2013

MASON WEST, INC.
1601 E. Miraloma Ave. Placentia, CA 92870
TEL (714) 630 - 0701, www.masonwest.com

Jiefu "Jeff" Zhang, SE
California SE No. S5270

PAGE
F4.20

HANGER ROD DIAMETER = ½"	PIPING/CONDUIT ALL DIRECTIONAL TRAPEZE SEISMIC SOLID BRACING SYSTEM 60 PLF MAX	KIT OPTIONS TW50A

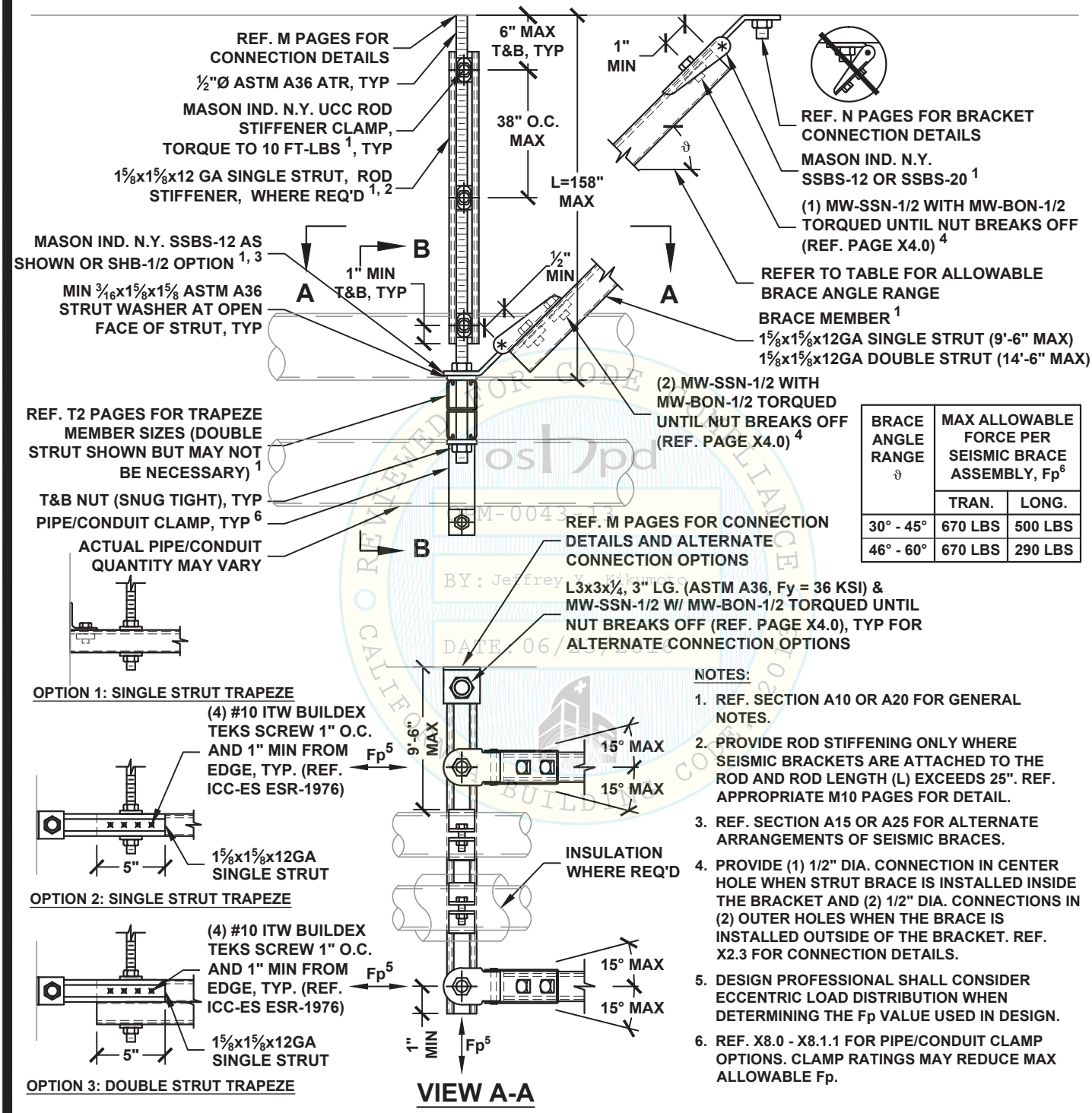

BRACE ANGLE RANGE ϑ	MAX ALLOWABLE FORCE PER SEISMIC BRACE ASSEMBLY, Fp[6]	
	TRAN.	LONG.
30° - 45°	670 LBS	500 LBS
46° - 60°	670 LBS	290 LBS

NOTES:

1. REF. SECTION A10 OR A20 FOR GENERAL NOTES.
2. PROVIDE ROD STIFFENING ONLY WHERE SEISMIC BRACKETS ARE ATTACHED TO THE ROD AND ROD LENGTH (L) EXCEEDS 25". REF. APPROPRIATE M10 PAGES FOR DETAIL.
3. REF. SECTION A15 OR A25 FOR ALTERNATE ARRANGEMENTS OF SEISMIC BRACES.
4. PROVIDE (1) 1/2" DIA. CONNECTION IN CENTER HOLE WHEN STRUT BRACE IS INSTALLED INSIDE THE BRACKET AND (2) 1/2" DIA. CONNECTIONS IN (2) OUTER HOLES WHEN THE BRACE IS INSTALLED OUTSIDE OF THE BRACKET. REF. X2.3 FOR CONNECTION DETAILS.
5. DESIGN PROFESSIONAL SHALL CONSIDER ECCENTRIC LOAD DISTRIBUTION WHEN DETERMINING THE Fp VALUE USED IN DESIGN.
6. REF. X8.0 - X8.1.1 FOR PIPE/CONDUIT CLAMP OPTIONS. CLAMP RATINGS MAY REDUCE MAX ALLOWABLE Fp.

MASON WEST, INC.
1601 E. Miraloma Ave. Placentia, CA 92870
TEL (714) 630 - 0701, www.masonwest.com

Jiefu "Jeff" Zhang, SE
California SE No. S5270

PAGE
F4.22

OSHPD PREAPPROVED FOR CODE COMPLIANCE OPM-0043-13
BY: Jeffrey Y. Kikumoto
DATE: 06/23/2016

HANGER ROD DIAMETER = 5/8"	PIPING/CONDUIT TRANSVERSE TRAPEZE SEISMIC SOLID BRACING SYSTEM 100 PLF MAX	KIT OPTIONS TW63T

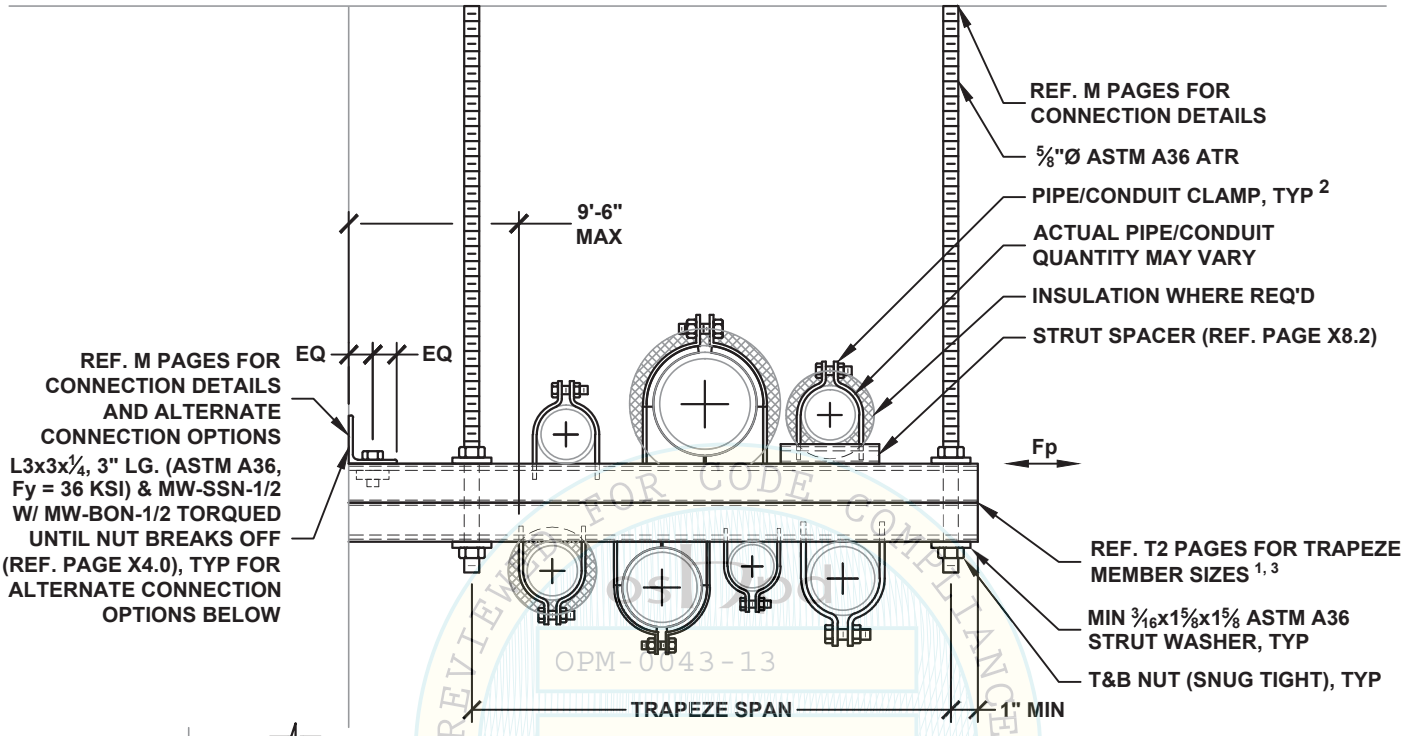

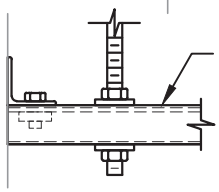

OPTION 1: SINGLE STRUT TRAPEZE

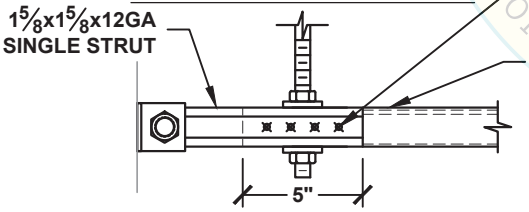

OPTION 2: SINGLE STRUT TRAPEZE

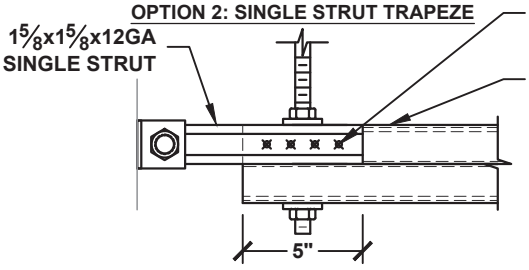

OPTION 3: DOUBLE STRUT TRAPEZE

MAX ALLOWABLE FORCE PER SEISMIC BRACE ASSEMBLY, Fp 2
670 LBS

NOTES:

1. TRAPEZE MEMBER MAY BE PROVIDED WITH ROUND HOLES SIZED FOR HANGER RODS. REF. X7.0 & X7.1 FOR STRUT MEMBER DATA.
2. REF. X8.0 - X8.1.1 FOR PIPE/CONDUIT CLAMP OPTIONS. CLAMP RATINGS MAY REDUCE MAX ALLOWABLE Fp.
3. DOUBLE STRUT TRAPEZE OPTION SHOWN MAY NOT BE NECESSARY.
4. SEPARATE LONGITUDINAL BRACING SHALL BE PROVIDED FOR THE PIPE/CONDUIT RUN AS DISCUSSED IN SECTION A10.

OPM-0043-13
BY: Jeffrey Y. Kikumoto
DATE: 06/23/2016
REVIEWED FOR CODE COMPLIANCE
CALIFORNIA BUILDING CODE, 2013

MASON WEST, INC.
1601 E. Miraloma Ave. Placentia, CA 92870
TEL (714) 630 - 0701, www.masonwest.com

Jiefu "Jeff" Zhang, SE
California SE No. S5270

PAGE
F4.30

HANGER ROD DIAMETER = 5/8"

PIPING/CONDUIT ALL-DIRECTIONAL TRAPEZE SEISMIC SOLID BRACING SYSTEM 100 PLF MAX

KIT OPTIONS
TW63A

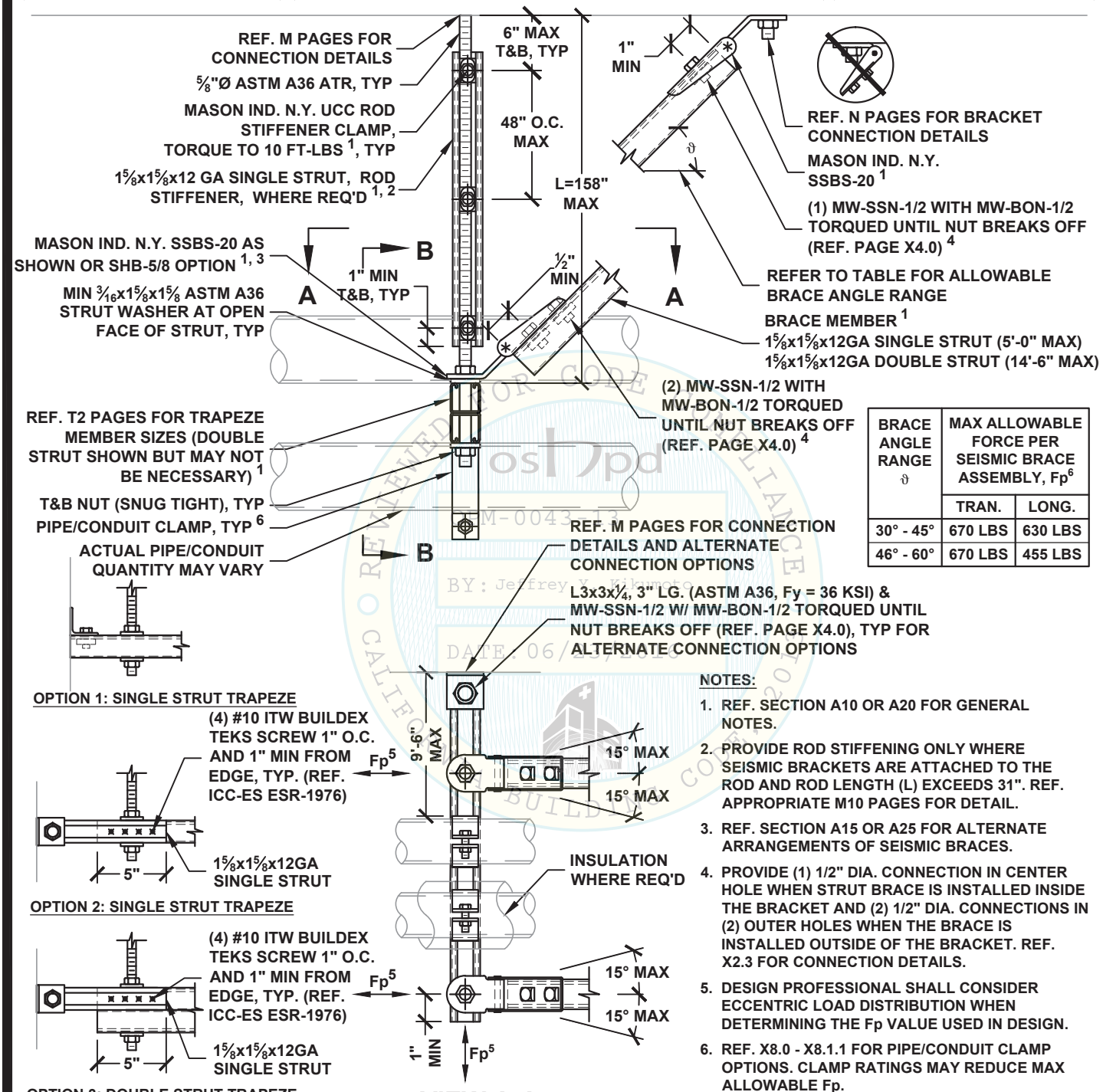

BRACE ANGLE RANGE ϑ	MAX ALLOWABLE FORCE PER SEISMIC BRACE ASSEMBLY, Fp6	
	TRAN.	LONG.
30° - 45°	670 LBS	630 LBS
46° - 60°	670 LBS	455 LBS

NOTES:

1. REF. SECTION A10 OR A20 FOR GENERAL NOTES.
2. PROVIDE ROD STIFFENING ONLY WHERE SEISMIC BRACKETS ARE ATTACHED TO THE ROD AND ROD LENGTH (L) EXCEEDS 31". REF. APPROPRIATE M10 PAGES FOR DETAIL.
3. REF. SECTION A15 OR A25 FOR ALTERNATE ARRANGEMENTS OF SEISMIC BRACES.
4. PROVIDE (1) 1/2" DIA. CONNECTION IN CENTER HOLE WHEN STRUT BRACE IS INSTALLED INSIDE THE BRACKET AND (2) 1/2" DIA. CONNECTIONS IN (2) OUTER HOLES WHEN THE BRACE IS INSTALLED OUTSIDE OF THE BRACKET. REF. X2.3 FOR CONNECTION DETAILS.
5. DESIGN PROFESSIONAL SHALL CONSIDER ECCENTRIC LOAD DISTRIBUTION WHEN DETERMINING THE Fp VALUE USED IN DESIGN.
6. REF. X8.0 - X8.1.1 FOR PIPE/CONDUIT CLAMP OPTIONS. CLAMP RATINGS MAY REDUCE MAX ALLOWABLE Fp.

MASON WEST, INC.
1601 E. Miraloma Ave. Placentia, CA 92870
TEL (714) 630 - 0701, www.masonwest.com

Jiefu "Jeff" Zhang, SE
California SE No. S5270

PAGE
F4.32

HANGER DESIGNATION, ATTACHMENT AND SECTION NOTES

PIPE OR CONDUIT SIZE	HANGER ROD SIZE	
	DESIGNATION	DIAMETER (INCH)
UP TO 2"	38	3/8
2½" TO 3"	50	1/2
4" TO 5"	63	5/8
6" TO 18"	75	3/4
10" TO 12"	88	7/8
14" TO 18"	100	1
20" TO 24"	125	1¼

LEGEND (HANGER ATTACHMENT TYPE)

X

- ### — DENOTES ATR HANGER SIZE
- X — DENOTES VERTICAL LOAD RATING

VERTICAL LOAD RATING	
DESIGNATION	MAXIMUM ALLOWABLE LOAD (LBS)
A	75
B	125
C	175
D	250
E	350
F	450
G	575
H	700
J	850
K	1000
L	1250
M	1600
N	2000
P	2500
Q	3500
R	5000
S	7500
T	11000

DISTRITUBTION SYSTEM			HANGER ROD SIZE	
PIPE/CONDUIT	DUCTWORK	CABLE TRAY	DESIGNATION	DIAMETER (INCH)
30 LBS/FT	30 LBS/FT	20 LBS/FT	38	3/8
60 LBS/FT	60 LBS/FT	45 LBS/FT	50	1/2
100 LBS/FT	100 LBS/FT	85 LBS/FT	63	5/8
300 LBS/FT			75	3/4
500 LBS/FT			100	1
500 LBS/FT			125	1¼

NOTES:

1 - "M" SERIES PAGES ARE COMPRISED OF HANGER ANCHORAGE CAPACITIES FOR VARIOUS TYPES OF ANCHORAGE CONDITIONS AT SEISMIC BRACE LOCATIONS ONLY. EACH HANGER ATTACHMENT TYPE IS DESIGNATED BY A SET OF NUMBERS AND A LETTER. THE NUMBERS REPRESENTS THE HANGER ROD SIZE (FOUND IN THE HANGER ROD SIZE TABLE) AND THE LETTER REPRESENTS THE MAXIMUM ALLOWABLE LOAD (FOUND IN THE VERTICAL LOAD RATING TABLE).

EXAMPLE: 38H REPRESENTS HANGER ROD SIZE OF ⅜"Ø WITH A MAXIMUM ALLOWABLE VERTICAL LOAD RATING OF 700 LBS.

2 - HANGER ANCHORAGE ATTACHMENTS TO STRUCTURE MAY BE USED WITH ANY ONE OF "M" SERIES PAGES, PROVIDED HANGER ATTACHMENT SIZE IS APPROPRIATE FOR THE APPLICATION AND THE ALLOWABLE VERTICAL LOAD CAPACITY IS MET.

3 - STRUCTURAL ENGINEER OF RECORD TO VERIFY ADEQUACY OF THE STRUCTURE FROM LOADING IMPOSED BY VERTICAL HANGER ATTACHMENT.

4 - WHERE ROD STIFFENER IS REQUIRED, SEE M10.12.

5 - THREADED ROD ENGAGEMENT INTO MW-PAL-A-CS AND MW-PAL-A-MD SHALL BE MINIMUM OF ONE ROD DIAMETER. ROD INSTALLATION TO MW-PAL-A-CS AND MW-PAL-A-MD SHALL BE SNUG TIGHT.

6 - HANGER ROD MAY BE INSTALLED UP TO 6 DEGREES FROM PERPENDICULAR TO CONCRETE SURFACE.

7 - WHEN CONCRETE ANCHORS ARE INSTALLED AT THE BOTTOM OF THE CONCRETE FILLED METAL DECK, MINIMUM END DISTANCE AND SPACING REQUIREMENTS ARE ALONG FLUTE LENGTH ONLY.

8 - SEE X7.0 AND X7.1 FOR STRUT MEMBER DATA.

9 - ALL-THREAD RODS MUST BE MADE OF A36 STEEL AND ROD COUPLERS MUST CONFORM TO ASTM A563 STEEL WITH A MINIMUM OF 58 KSI TENSILE STRENGTH. MINIMUM ENGAGEMENT INTO ROD COUPLER MUST BE EQUAL TO THE ATR DIAMETER. ATR HANGER IS PERMITTED FOR COMPRESSION AND TENSION LOADING CONDITIONS ONLY; NO SHEAR LOADING.

10 - ALL CONCRETE FLAT SLABS, WALLS, AND BEAMS MUST HAVE A MINIMUM OF #4 BAR OR GREATER BETWEEN THE ANCHOR AND THE EDGE OF CONCRETE.

11 - DESIGN IS CONTROLLED BY SEISMIC FORCES. NON-SEISMIC FORCES SUCH AS GRAVITY ARE OUTSIDE THE SCOPE OF THIS OPM.

12 - ON PAGES M1.XX AND M2.XX, THE DESIGN PROFESSIONAL SHALL USE THE ALLOWABLE VERTICAL LOADS UNDER OVERSTRENGTH FACTOR Ω_0 =2.5 UNLESS THE VERTICAL SUPPORT COMPLIES WITH ONE OF THE CONDITIONS LISTED IN ACI 318-11 APPENDIX D, SECTION D.3.3.4.3.

13 - POST-INSTALLED ANCHORS MAY BE INSTALLED A MINIMUM OF 3 BOLT DIAMETERS AWAY FROM ABANDONED HOLES, AND A MINIMUM OF 1.5 BOLT DIAMETERS AWAY FROM DRYPACK MORTAR FILLED HOLES. DRYPACK MORTAR SHALL HAVE A COMPRESSIVE STRENGTH EQUAL OR GREATER THAN THE CONCRETE STRENGTH IN WHICH IT IS BEING USED.

14 - THE HANGER ROD AT SEISMIC BRACE LOCATIONS IS SUBJECTED TO GRAVITY LOADS AS WELL AS LATERAL AND VERTICAL SEISMIC LOADS AND HAS BEEN DESIGNED FOR SUCH COMBINED LOADING IN COMPLIANCE WITH THE CALIFORNIA BUILDING CODE, CALIFORNIA OSHPD AND STANDARD STRUCTURAL STEEL PRACTICES AND ARE NOT SUBJECT TO THE HANGER ROD DIAMETERS DESIGNED FOR GRAVITY LOADS ONLY THAT MAY BE OUTLINED IN PROJECT SPECIFICATIONS, CODE DOCUMENTS, TRADE GUIDELINES, ETC. IN ORDER TO ENSURE THE DELIVERY OF SEISMIC BRACE COMPONENTS THAT MATCH FIELD ERECTED HANGERS, ALL HANGER RODS FOR INDIVIDUAL PIPES AND TRAPEZED SYSTEMS AT SEISMIC BRACE LOCATIONS SHOULD ADHERE TO THE TABLES ABOVE.

MASON WEST, INC.
1601 E. Miraloma Ave. Placentia, CA 92870
TEL (714) 630 - 0701, www.masonwest.com

Jiefu "Jeff" Zhang, SE
California SE No. S5270

PAGE
M0.00

HANGER ATTACHMENT
TO CONCRETE SLAB AND BEAM WITH
(1) MW-PAL-A-CS CONCRETE INSERT

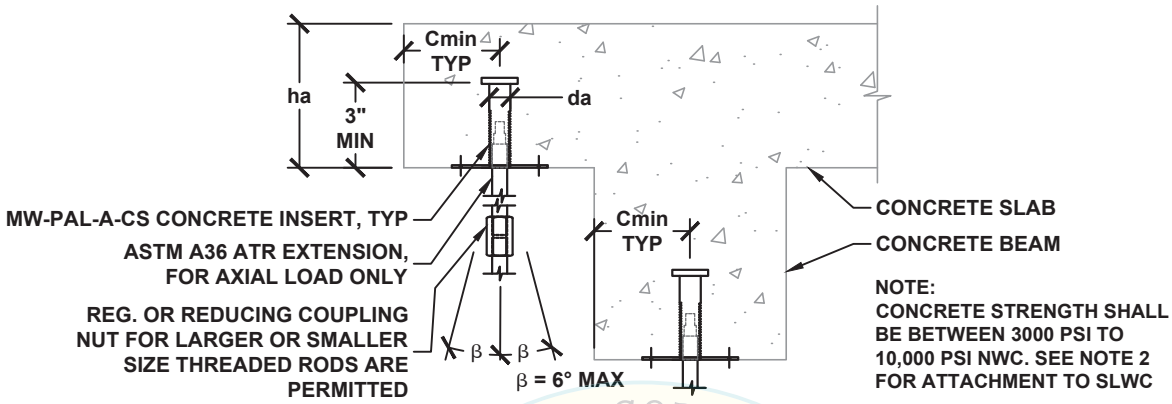

REVIEWED FOR CODE COMPLIANCE
CALIFORNIA BUILDING CODE 2013
oshpd
OPM 0043 13
BY: Jeffrey Y. Kikumoto
DATE: 06/23/2016

HANGER ATTACHMENT TYPE	ALLOWABLE VERTICAL LOAD Ta [1,2] LBS	ATR HANGER DIA. INCH	MW-PAL-A-CS CONCRETE INSERT (REFER TO PAGES X5.0.CS & X5.2.1)				
			DIA. da INCH	MIN EFF. EMBED. hef INCH	MIN BASE TH. ha INCH	MIN EDGE Cmin INCH	MIN SPACING Smin INCH
38A TO 38N	2210	3/8	7/8	3	4½	4½	9
50A TO 50P	3020	½					
63A TO 63P	3020	5/8					

SEE DETAIL M0.00 FOR SECTION NOTES

[1] ALLOWABLE LOADS HAVE BEEN INCREASED BY A FACTOR OF 1.2 FOR LOAD COMBINATIONS INCLUDING OVERSTRENGTH, Ω_0, PER ASCE 7-10 SEC. 12.14.3.2.3.

[2] FOR SLWC SLAB AND BEAM, REDUCE ALLOWABLE VERTICAL LOAD BY MULTIPLYING ALLOWABLE LOAD BY A FACTOR OF 0.85.

MASON WEST, INC.
1601 E. Miraloma Ave. Placentia, CA 92870
TEL (714) 630 - 0701, www.masonwest.com

Jiefu "Jeff" Zhang, SE
California SE No. S5270

PAGE
M1.10

HANGER ATTACHMENT TO CONCRETE SLAB AND BEAM WITH (2) MW-PAL-A-CS CONCRETE INSERTS

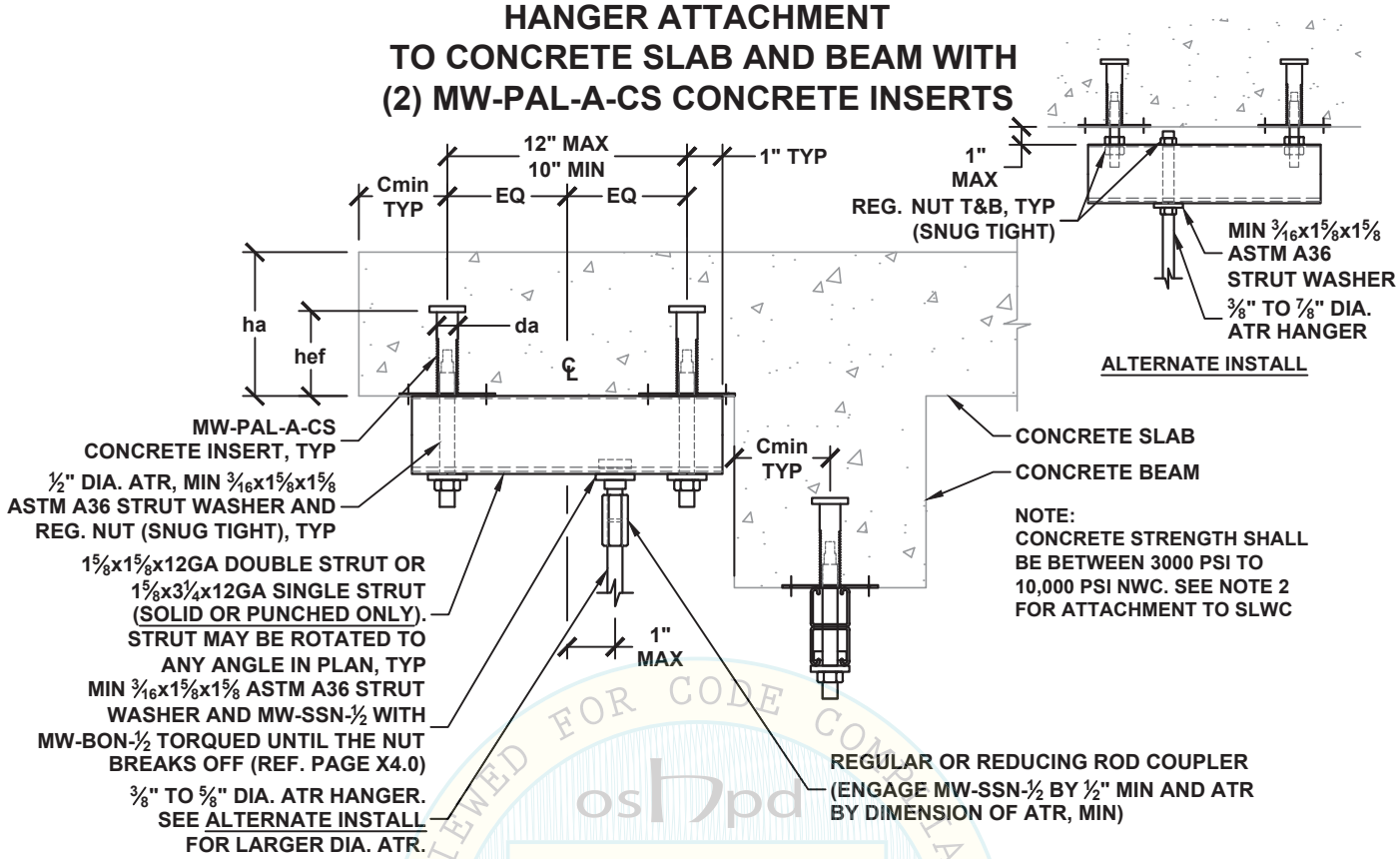

HANGER ATTACHMENT TYPE	STEEL COMPONENT ALLOWABLE VERTICAL LOAD Ta (LBS)	HANGER ATTACHMENT TYPE	CONCRETE INSERT ALLOWABLE VERTICAL LOAD Tac [1,2] (LBS)	ATR HANGER DIA. (INCH)	MW-PAL-A-CS CONCRETE INSERT (REFER TO PAGES X5.0.CS & X5.2.1)				
					DIA. da (INCH)	MIN EFF. EMBED. hef INCH	MIN BASE TH. ha INCH	MIN EDGE Cmin (INCH)	MIN SPACING Smin (INCH)
38A TO 38N	2400	38A TO 38R	5030	⅜	⅞	3	6	4½	9
50A TO 50P	2620	50A TO 50R	5030	½					
63A TO 63P	2620	63A TO 63R	5030	⅝					
75A TO 75P	2620	75A TO 75R	5030	¾					
88A TO 88P	2620	88A TO 88R	5030	⅞					

SEE DETAIL M0.00 FOR SECTION NOTES

[1] ALLOWABLE LOADS HAVE BEEN INCREASED BY A FACTOR OF 1.2 FOR LOAD COMBINATIONS INCLUDING OVERSTRENGTH, Ω_0, PER ASCE 7-10 SEC. 12.14.3.2.3.

[2] FOR SLWC SLAB AND BEAM, REDUCE CONCRETE INSERT ALLOWABLE VERTICAL LOAD BY MULTIPLYING ALLOWABLE LOAD BY A FACTOR OF 0.85.

OPM-0043-13 REVIEWED FOR CODE COMPLIANCE BY: Jeffrey Kikumoto DATE: 06/23/2016 OSHPD

MASON WEST, INC.
1601 E. Miraloma Ave. Placentia, CA 92870
TEL (714) 630 - 0701, www.masonwest.com

Jiefu "Jeff" Zhang, SE
California SE No. S5270

PAGE
M1.12

HANGER ATTACHMENT
TO CONCRETE SLAB AND BEAM WITH
(2) MW-PAL-A-CS CONCRETE INSERTS

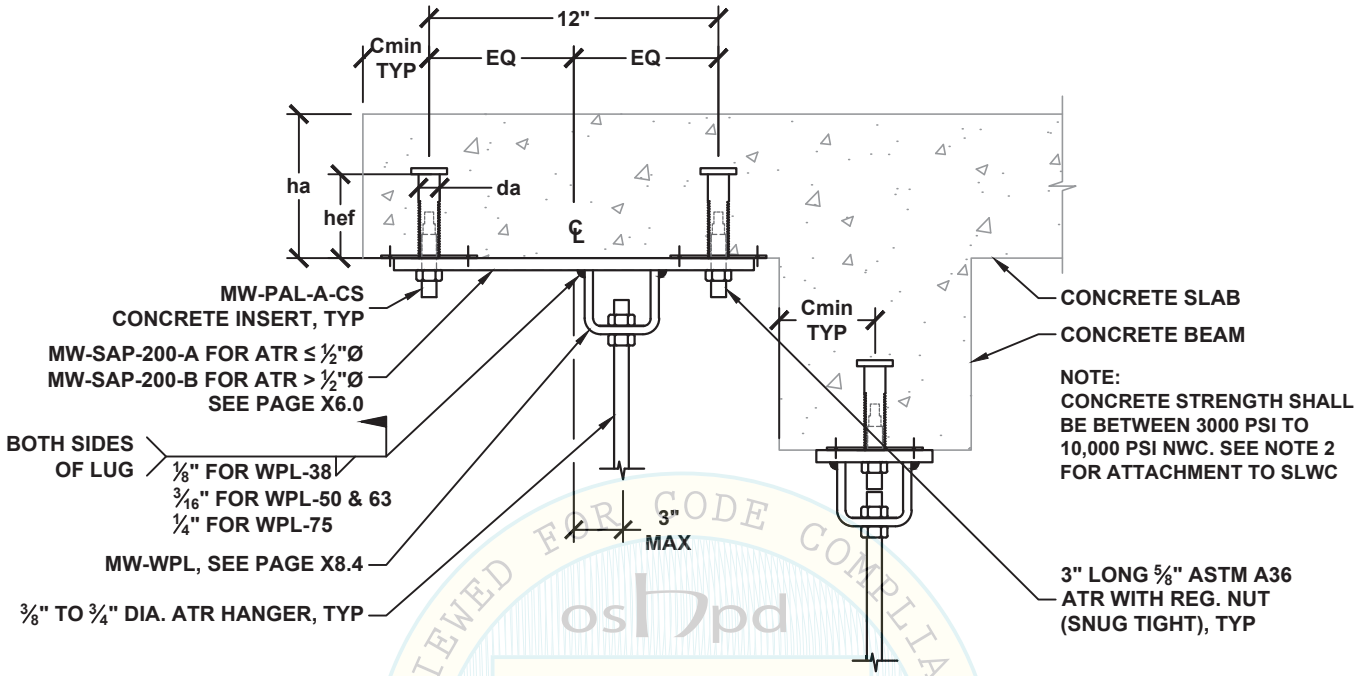

OPM-0043-13
BY: Jeffrey Y. Kikumoto
DATE: 06/23/2016
REVIEWED FOR CODE COMPLIANCE
CALIFORNIA BUILDING CODE 2013

HANGER ATTACHMENT TYPE	STEEL COMPONENT ALLOWABLE VERTICAL LOAD Ta (LBS)	HANGER ATTACHMENT TYPE	CONCRETE INSERT ALLOWABLE VERTICAL LOAD Tac [1,2] (LBS)	ATR HANGER DIA. (INCH)	MW-PAL-A-CS CONCRETE INSERT (REFER TO PAGES X5.0.CS & X5.2.1)				
					DIA. da (INCH)	MIN EFF. EMBED. hef INCH	MIN BASE TH. ha INCH	MIN EDGE Cmin (INCH)	MIN SPACING Smin (INCH)
38A TO 38H	720	38A TO 38Q	4030	⅜	⅞	3	6	4½	9
50A TO 50K	1080	50A TO 50Q	4030	½					
63A TO 63M	1930	63A TO 63Q	4030	⅝					
75A TO 75M	1930	75A TO 75Q	4030	¾					

SEE DETAIL M0.00 FOR SECTION NOTES

[1] ALLOWABLE LOADS HAVE BEEN INCREASED BY A FACTOR OF 1.2 FOR LOAD COMBINATIONS INCLUDING OVERSTRENGTH, Ω_0, PER ASCE 7-10 SEC. 12.14.3.2.3.

[2] FOR SLWC SLAB AND BEAM, REDUCE CONCRETE INSERT ALLOWABLE VERTICAL LOAD BY MULTIPLYING ALLOWABLE LOAD BY A FACTOR OF 0.85.

MASON WEST, INC.
1601 E. Miraloma Ave. Placentia, CA 92870
TEL (714) 630 - 0701, www.masonwest.com

Jiefu "Jeff" Zhang, SE
California SE No. S5270

PAGE
M1.13

HANGER ATTACHMENT TO CONCRETE SLAB AND BEAM WITH (4) MW-PAL-A-CS CONCRETE INSERTS

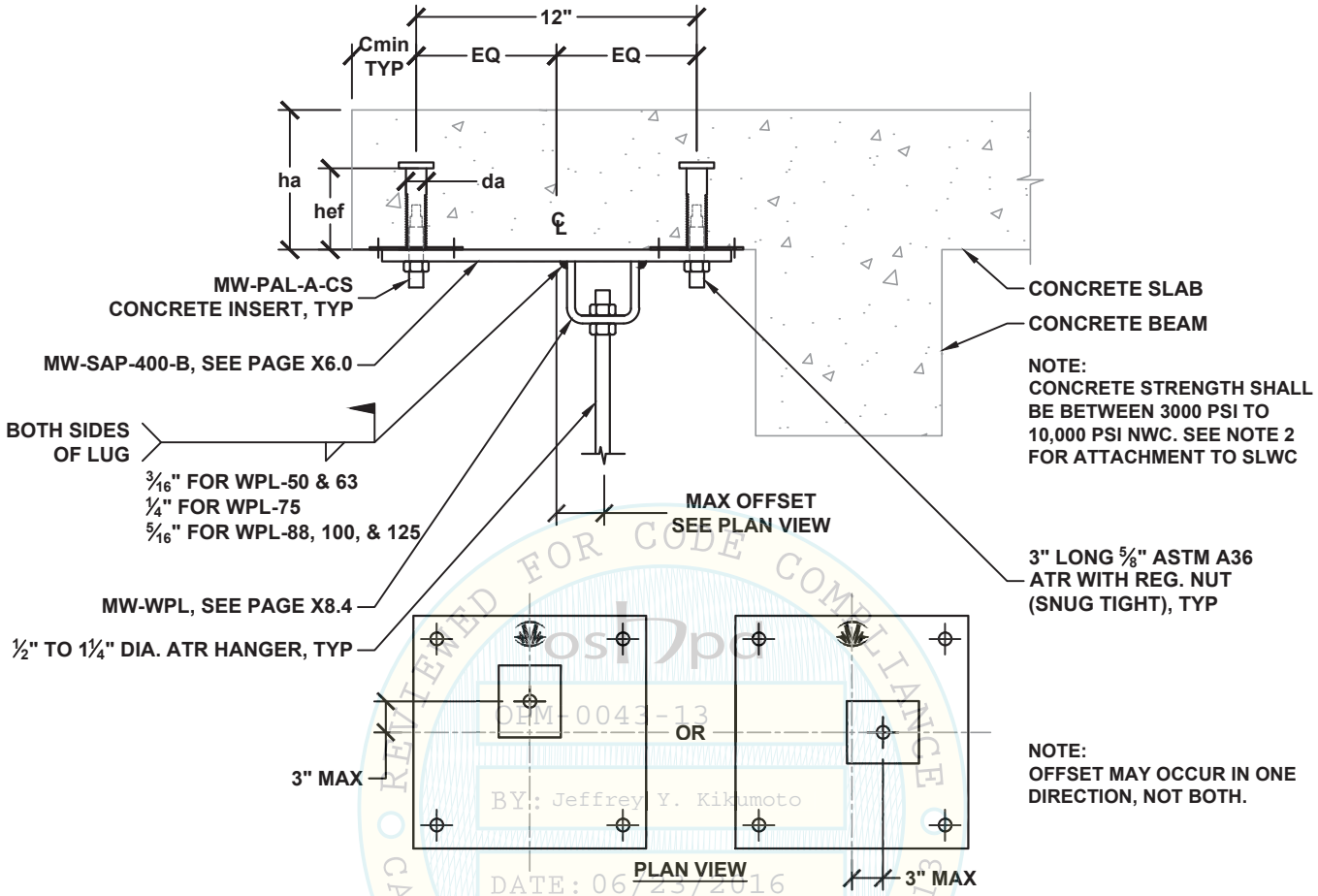

REVIEWED FOR CODE COMPLIANCE
OPM-0043-13
BY: Jeffrey Y. Kikumoto
DATE: 06/23/2016
CALIFORNIA BUILDING CODE 2013

HANGER ATTACHMENT TYPE	STEEL COMPONENT ALLOWABLE VERTICAL LOAD Ta LBS	HANGER ATTACHMENT TYPE	CONCRETE INSERT ALLOWABLE VERTICAL LOAD Tac [1,2] LBS	ATR HANGER DIA. (INCH)	MW-PAL-A-CS CONCRETE INSERT (REFER TO PAGES X5.0.CS & X5.2.1)				
					DIA. da (INCH)	MIN EFF. EMBED. hef INCH	MIN BASE TH. ha INCH	MIN EDGE Cmin (INCH)	MIN SPACING Smin (INCH)
50A TO 50L	1320	50A TO 50S	8050	1/2	7/8	3	6	4 1/2	9
63A TO 63P	2880	63A TO 63S	8050	5/8					
75A TO 75Q	3600	75A TO 75S	8050	3/4					
88A TO 88Q	3600	88A TO 88S	8050	7/8					
100A TO 100Q	3600	100A TO 100S	8050	1					
125A TO 125Q	3600	125A TO 125S	8050	1 1/4					

SEE DETAIL M0.00 FOR SECTION NOTES

[1] ALLOWABLE LOADS HAVE BEEN INCREASED BY A FACTOR OF 1.2 FOR LOAD COMBINATIONS INCLUDING OVERSTRENGTH, Ω_0, PER ASCE 7-10 SEC. 12.14.3.2.3.

[2] FOR SLWC SLAB AND BEAM, REDUCE CONCRETE INSERT ALLOWABLE VERTICAL LOAD BY MULTIPLYING ALLOWABLE LOAD BY A FACTOR OF 0.85.

MASON WEST, INC.
1601 E. Miraloma Ave. Placentia, CA 92870
TEL (714) 630 - 0701, www.masonwest.com

Jiefu "Jeff" Zhang, SE
California SE No. S5270

HANGER ATTACHMENT TO CONCRETE SLAB AND BEAM WITH (1) HILTI KB-TZ CONCRETE ANCHOR

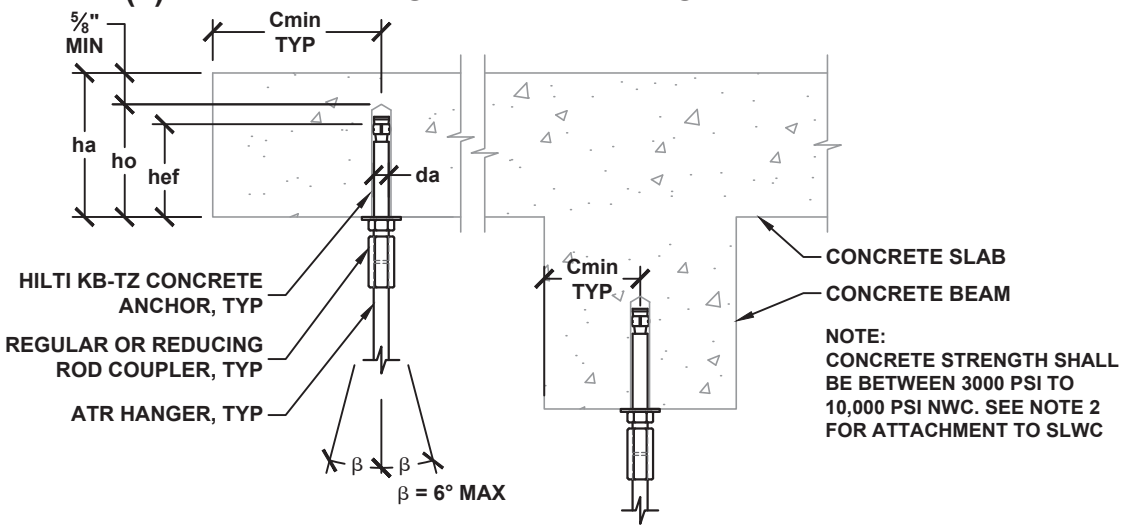

HANGER ATTACHMENT TYPE	ALLOWABLE VERTICAL LOAD Ta [1,2] LBS	ATR HANGER DIA. INCH	HILTI KB-TZ CONCRETE ANCHOR (ICC ESR-1917) SPECIAL INSPECTION REQ'D						
			DIA. da INCH	MIN EFF. EMBED. hef INCH	MIN HOLE DEPTH ho INCH	MIN BASE TH. ha INCH	MIN EDGE Cmin INCH	MIN SPACING Smin INCH	TORQUE REQ'D FT-LBS
38A TO 38K	1020	3/8	3/8	2	2 5/8	4	4 1/2	6	25
38A TO 38K	1080	3/8							
50A TO 50K	1080	1/2	1/2	2	2 5/8	4	4 1/2	6	40
63A TO 63K	1080	5/8							
38A TO 38N	2200	3/8							
50A TO 50N	2200	1/2	1/2	3 1/4	4	6	6	9 3/4	40
63A TO 63N	2200	5/8							
50A TO 50N	2110	1/2							
63A TO 63N	2110	5/8	5/8	3 1/8	3 3/4	5	6	9 3/8	60
75A TO 75N	2110	3/4							
50A TO 50N	3050	1/2							
63A TO 63P	3050	5/8	5/8	4	4 3/4	6	12	12	60
75A TO 75P	3050	3/4							
63A TO 63P	2770	5/8							
75A TO 75P	2770	3/4	3/4	3 3/4	4 5/8	6	12	11 1/4	110
88A TO 88P	2770	7/8							
63A TO 63Q	3950	5/8							
75A TO 75Q	3950	3/4	3/4	4 3/4	5 3/4	8	12	14 1/4	110
88A TO 88Q	3950	7/8							

REVIEWED FOR CODE COMPLIANCE
OSHPD
OPM-0043-13
REVIEWED BY: Jeffrey Y. Kikumoto
DATE: 06/23/2016
CALIFORNIA BUILDING CODE, 2013 CBC

SEE DETAIL M0.00 FOR SECTION NOTES

[1] ALLOWABLE LOADS HAVE BEEN INCREASED BY A FACTOR OF 1.2 FOR LOAD COMBINATIONS INCLUDING OVERSTRENGTH, Ω_0, PER ASCE 7-10 SEC. 12.14.3.2.3.

[2] FOR SLWC SLAB AND BEAM, REDUCE ALLOWABLE VERTICAL LOAD BY MULTIPLYING ALLOWABLE LOAD BY A FACTOR OF 0.6.

MASON WEST, INC.
1601 E. Miraloma Ave. Placentia, CA 92870
TEL (714) 630 - 0701, www.masonwest.com

Jiefu "Jeff" Zhang, SE
California SE No. S5270

HANGER ATTACHMENT TO CONCRETE SLAB AND BEAM WITH (2) HILTI KB-TZ CONCRETE ANCHORS

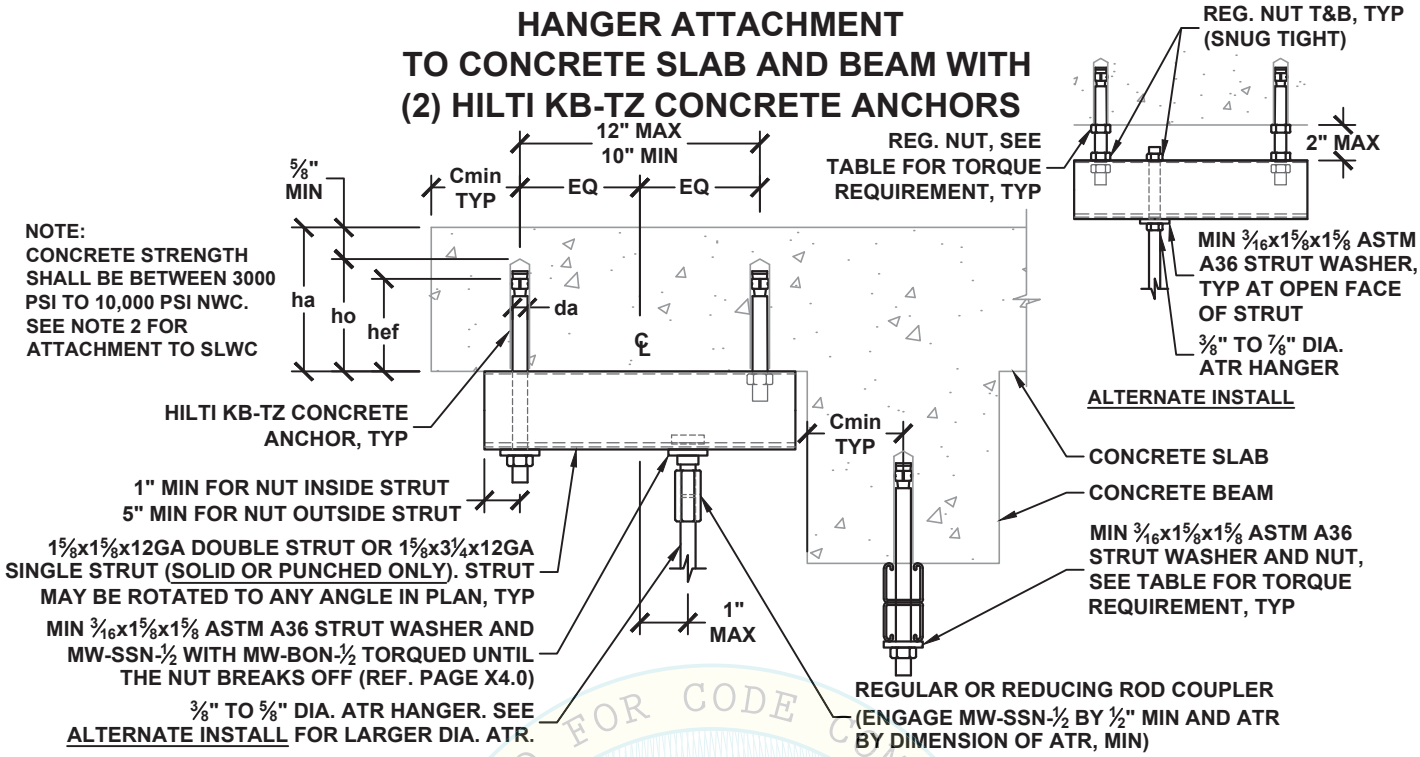

HANGER ATTACHMENT TYPE	STEEL COMPONENT ALLOWABLE VERTICAL LOAD Ta LBS	HANGER ATTACHMENT TYPE	CONCRETE ANCHOR ALLOWABLE VERTICAL LOAD Tac [1,2] LBS	ATR HANGER DIA. INCH	HILTI KB-TZ CONCRETE ANCHORS (ICC ESR-1917) SPECIAL INSPECTION REQ'D						
					DIA. da INCH	MIN EFF. EMBED. hef INCH	MIN HOLE DEPTH ho INCH	MIN BASE TH. ha INCH	MIN EDGE Cmin INCH	MIN SPACING Smin INCH	TORQUE REQ'D FT-LBS
38A TO 38N	2400	38A TO 38M	1700	3/8	3/8	2	2 5/8	4	4 1/2	6	25
50A TO 50P	2620	50A TO 50M	1700	1/2							
63A TO 63P	2620	63A TO 63M	1700	5/8							
75A TO 75P	2620	75A TO 75M	1700	3/4							
88A TO 88P	2620	88A TO 88M	1700	7/8							
38A TO 38N	2400	38A TO 38M	1800	3/8	1/2	2	2 5/8	4	4 1/2	6	40
50A TO 50P	2620	50A TO 50M	1800	1/2							
63A TO 63P	2620	63A TO 63M	1800	5/8							
75A TO 75P	2620	75A TO 75M	1800	3/4							
88A TO 88P	2620	88A TO 88M	1800	7/8							
38A TO 38N	2400	38A TO 38Q	3670	3/8	1/2	3 1/4	4	6	6	9 3/4	40
50A TO 50P	2620	50A TO 50Q	3670	1/2							
63A TO 63P	2620	63A TO 63Q	3670	5/8							
75A TO 75P	2620	75A TO 75Q	3670	3/4							
88A TO 88P	2620	88A TO 88Q	3670	7/8							

SEE DETAIL M0.00 FOR SECTION NOTES

[1] ALLOWABLE LOADS HAVE BEEN INCREASED BY A FACTOR OF 1.2 FOR LOAD COMBINATIONS INCLUDING OVERSTRENGTH, Ω_0, PER ASCE 7-10 SEC. 12.14.3.2.3.

[2] FOR SLWC SLAB AND BEAM, REDUCE CONCRETE ANCHOR ALLOWABLE VERTICAL LOAD BY MULTIPLYING ALLOWABLE LOAD BY A FACTOR OF 0.6.

OSHPD OPM-0043-13 Reviewed by: Jeffrey Y. Kikumoto DATE: 06/23/2016 CODE: 2013 CALIFORNIA BUILDING CODE

MASON WEST, INC.
1601 E. Miraloma Ave. Placentia, CA 92870
TEL (714) 630 - 0701, www.masonwest.com

Jiefu "Jeff" Zhang, SE
California SE No. S5270

PAGE
M1.21

HANGER ATTACHMENT TO CONCRETE SLAB AND BEAM WITH (2) HILTI KB-TZ CONCRETE ANCHORS

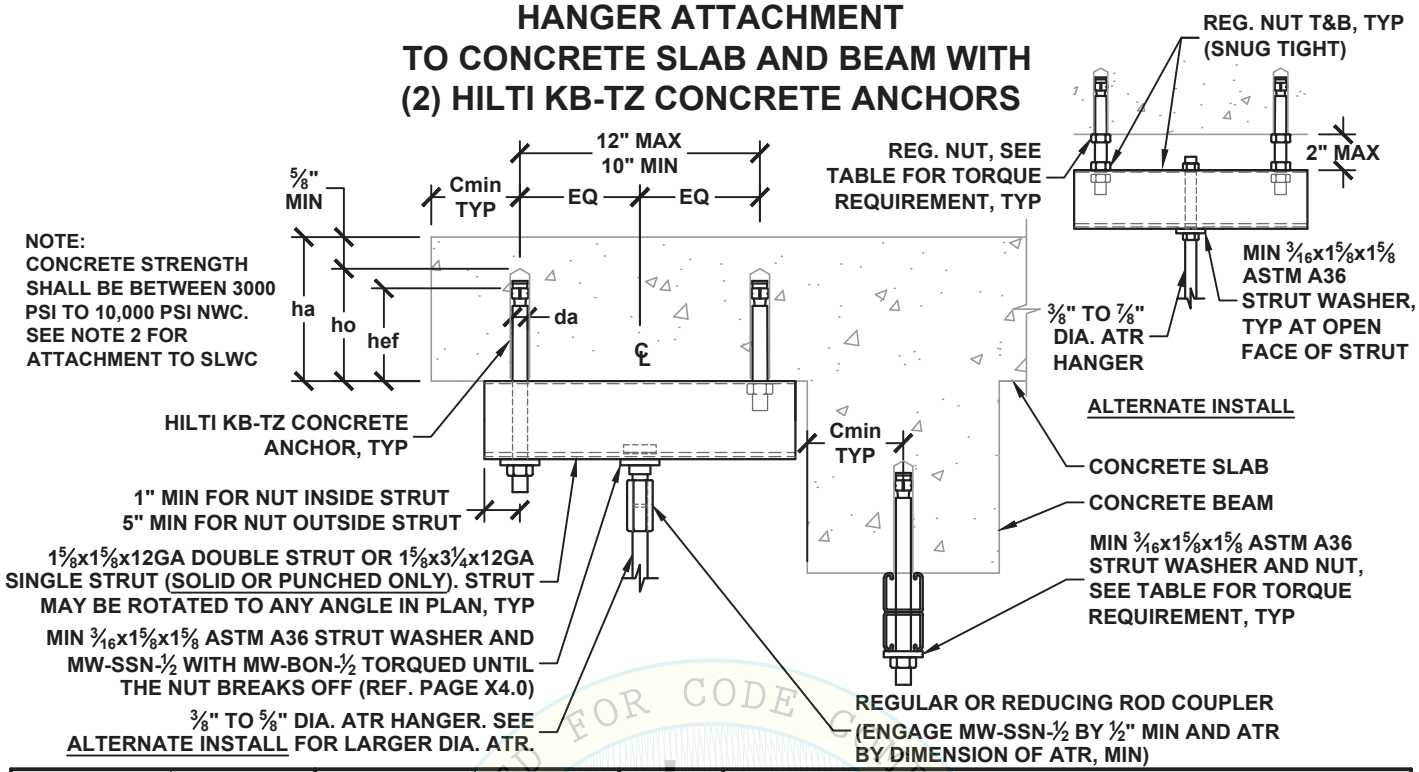

HANGER ATTACHMENT TYPE	STEEL COMPONENT ALLOWABLE VERTICAL LOAD Ta LBS	HANGER ATTACHMENT TYPE	CONCRETE ANCHOR ALLOWABLE VERTICAL LOAD Tac [1,2] LBS	ATR HANGER DIA. INCH	HILTI KB-TZ CONCRETE ANCHORS (ICC ESR-1917) SPECIAL INSPECTION REQ'D						
					DIA. da INCH	MIN EFF. EMBED. hef INCH	MIN HOLE DEPTH ho INCH	MIN BASE TH. ha INCH	MIN EDGE Cmin INCH	MIN SPACING Smin INCH	TORQUE REQ'D FT-LBS
38A TO 38N	2400	38A TO 38N	2040	3/8	3/8	2	2 5/8	4	4 1/2	6	25
50A TO 50P	2620	50A TO 50N	2040	1/2							
63A TO 63P	2620	63A TO 63N	2040	5/8							
75A TO 75P	2620	75A TO 75N	2040	3/4							
88A TO 88P	2620	88A TO 88N	2040	7/8							
38A TO 38N	2400	38A TO 38N	2160	3/8	1/2	2	2 5/8	4	4 1/2	6	40
50A TO 50P	2620	50A TO 50N	2160	1/2							
63A TO 63P	2620	63A TO 63N	2160	5/8							
75A TO 75P	2620	75A TO 75N	2160	3/4							
88A TO 88P	2620	88A TO 88N	2160	7/8							
38A TO 38N	2400	38A TO 38Q	4400	3/8	1/2	3 1/4	4	6	6	9 3/4	40
50A TO 50P	2620	50A TO 50Q	4400	1/2							
63A TO 63P	2620	63A TO 63Q	4400	5/8							
75A TO 75P	2620	75A TO 75Q	4400	3/4							
88A TO 88P	2620	88A TO 88Q	4400	7/8							

SEE DETAIL M0.00 FOR SECTION NOTES

[1] ALLOWABLE LOADS HAVE BEEN INCREASED BY A FACTOR OF 1.2 FOR LOAD COMBINATIONS INCLUDING OVERSTRENGTH, Ω_0, PER ASCE 7-10 SEC. 12.14.3.2.3.

[2] FOR SLWC SLAB AND BEAM, REDUCE CONCRETE ANCHOR ALLOWABLE VERTICAL LOAD BY MULTIPLYING ALLOWABLE LOAD BY A FACTOR OF 0.6.

MASON WEST, INC.
1601 E. Miraloma Ave. Placentia, CA 92870
TEL (714) 630 - 0701, www.masonwest.com

Jiefu "Jeff" Zhang, SE
California SE No. S5270

PAGE
M1.21.1

OSHPD OPM-0043-13 REVIEWED FOR CODE COMPLIANCE BY: Jeffrey K. Kikumoto DATE: 06/23/2016 CALIFORNIA BUILDING CODE, 2013

HANGER ATTACHMENT TO CONCRETE SLAB AND BEAM WITH (2) HILTI KB-TZ CONCRETE ANCHORS

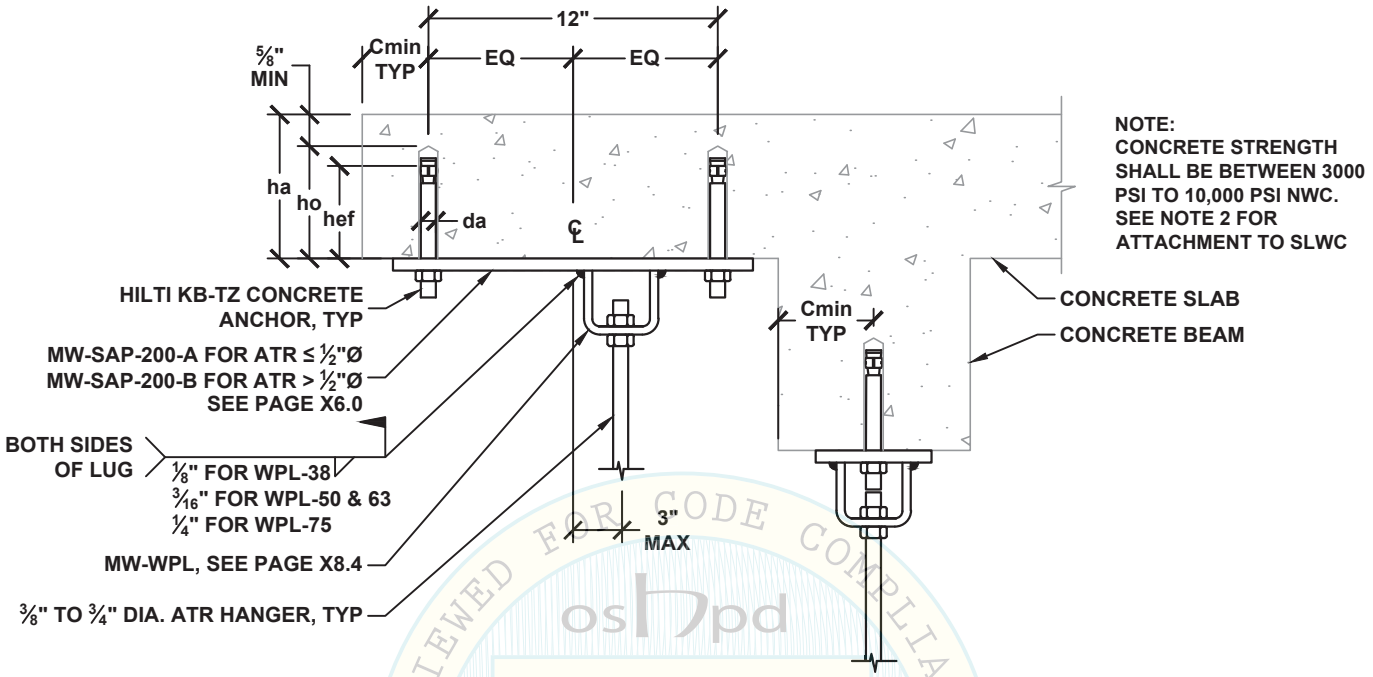

oshpd
OPM 0043-13
Jeffrey Y. Kikumoto
DATE 06/23/2016
REVIEWED FOR CODE COMPLIANCE
CALIFORNIA BUILDING CODE

HANGER ATTACHMENT TYPE	STEEL COMPONENT ALLOWABLE VERTICAL LOAD Ta LBS	HANGER ATTACHMENT TYPE	CONCRETE ANCHOR ALLOWABLE VERTICAL LOAD Tac [1,2] LBS	ATR HANGER DIA. INCH	HILTI KB-TZ CONCRETE ANCHORS (ICC ESR-1917) SPECIAL INSPECTION REQ'D						
					DIA. da INCH	MIN EFF. EMBED. hef INCH	MIN HOLE DEPTH ho INCH	MIN BASE TH. ha INCH	MIN EDGE Cmin INCH	MIN SPACING Smin INCH	TORQUE REQ'D FT-LBS
38A TO 38H	720	38A TO 38P	2810	⅜	⅝	3⅛	3¾	5	6	9⅜	60
50A TO 50K	1080	50A TO 50P	2810	½							
63A TO 63M	1930	63A TO 63P	2810	⅝							
75A TO 75M	1930	75A TO 75P	2810	¾							
38A TO 38H	720	38A TO 38Q	4070	⅜	⅝	4	4¾	6	12	12	60
50A TO 50K	1080	50A TO 50Q	4070	½							
63A TO 63M	1930	63A TO 63Q	4070	⅝							
75A TO 75M	1930	75A TO 75Q	4070	¾							

SEE DETAIL M0.00 FOR SECTION NOTES

[1] ALLOWABLE LOADS HAVE BEEN INCREASED BY A FACTOR OF 1.2 FOR LOAD COMBINATIONS INCLUDING OVERSTRENGTH, Ω_0, PER ASCE 7-10 SEC. 12.14.3.2.3.

[2] FOR SLWC SLAB AND BEAM, REDUCE CONCRETE ANCHOR ALLOWABLE VERTICAL LOAD BY MULTIPLYING ALLOWABLE LOAD BY A FACTOR OF 0.6.

MASON WEST, INC.
1601 E. Miraloma Ave. Placentia, CA 92870
TEL (714) 630 - 0701, www.masonwest.com

Jiefu "Jeff" Zhang, SE
California SE No. S5270

PAGE
M1.22

HANGER ATTACHMENT TO CONCRETE SLAB AND BEAM WITH (4) HILTI KB-TZ CONCRETE ANCHORS

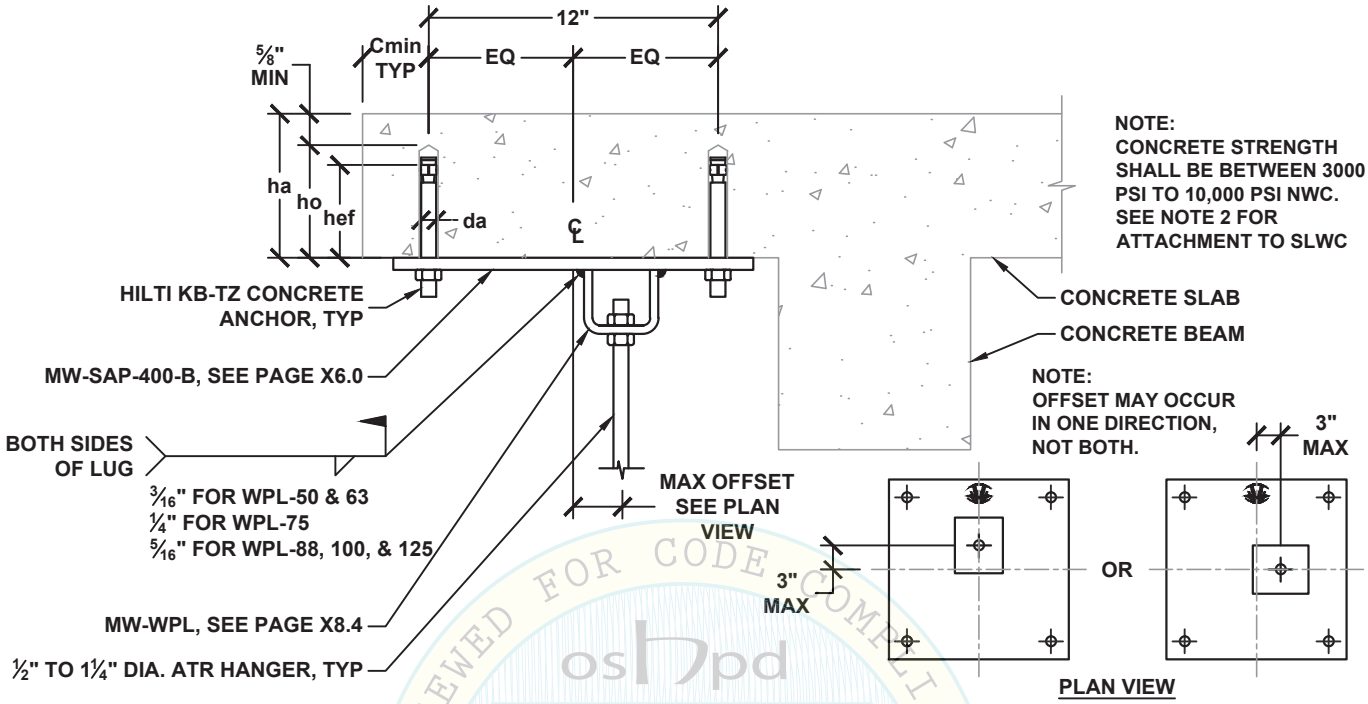

HANGER ATTACHMENT TYPE	STEEL COMPONENT ALLOWABLE VERTICAL LOAD Ta LBS	HANGER ATTACHMENT TYPE	CONCRETE ANCHOR ALLOWABLE VERTICAL LOAD Tac [1,2] LBS	ATR HANGER DIA. INCH	HILTI KB-TZ CONCRETE ANCHORS (ICC ESR-1917) SPECIAL INSPECTION REQ'D						
					DIA. da INCH	MIN EFF. EMBED. hef INCH	MIN HOLE DEPTH ho INCH	MIN BASE TH. ha INCH	MIN EDGE Cmin INCH	MIN SPACING Smin INCH	TORQUE REQ'D FT-LBS
50A TO 50L	1320	50A TO 50R	5630	½	⅝	3⅛	3¾	5	6	9⅜	60
63A TO 63P	2880	63A TO 63R	5630	⅝							
75A TO 75Q	3600	75A TO 75R	5630	¾							
88A TO 88Q	3600	88A TO 88R	5630	⅞							
100A TO 100Q	3600	100A TO 100R	5630	1							
125A TO 125Q	3600	125A TO 125R	5630	1¼							
50A TO 50L	1320	50A TO 50S	8130	½	⅝	4	4¾	6	12	12	60
63A TO 63P	2880	63A TO 63S	8130	⅝							
75A TO 75Q	3600	75A TO 75S	8130	¾							
88A TO 88Q	3600	88A TO 88S	8130	⅞							
100A TO 100Q	3600	100A TO 100S	8130	1							
125A TO 125Q	3600	125A TO 125S	8130	1¼							

SEE DETAIL M0.00 FOR SECTION NOTES

[1] ALLOWABLE LOADS HAVE BEEN INCREASED BY A FACTOR OF 1.2 FOR LOAD COMBINATIONS INCLUDING OVERSTRENGTH, Ω_0, PER ASCE 7-10 SEC. 12.14.3.2.3.

[2] FOR SLWC SLAB AND BEAM, REDUCE CONCRETE ANCHOR ALLOWABLE VERTICAL LOAD BY MULTIPLYING ALLOWABLE LOAD BY A FACTOR OF 0.6.

OPM-0043-13
DATE: 06/23/2016
Jeffrey Y. Kikumoto
REVIEWED FOR CODE COMPLIANCE WITH THE CALIFORNIA BUILDING CODE, 2013

MASON WEST, INC.
1601 E. Miraloma Ave. Placentia, CA 92870
TEL (714) 630 - 0701, www.masonwest.com

Jiefu "Jeff" Zhang, SE
California SE No. S5270

PAGE
M1.23

HANGER ATTACHMENT
TO CONCRETE SLAB AND BEAM WITH
(1) POWER-STUD+ SD1 CONCRETE ANCHOR

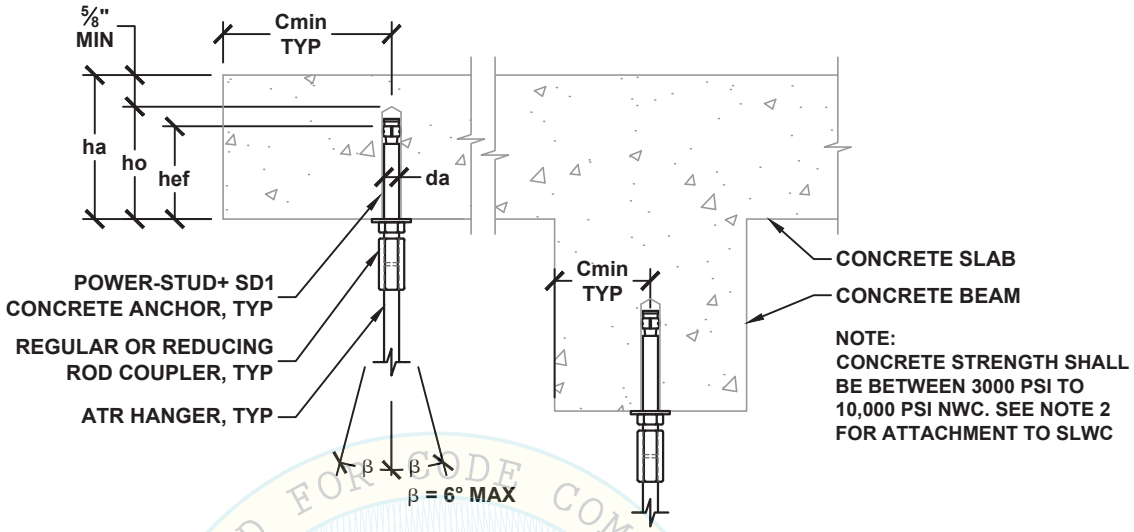

REVIEWED FOR CODE COMPLIANCE
CALIFORNIA BUILDING CODES
oshpd
OPM-0043-13
BY: Jeffrey Y. Kikumoto
DATE: 06/2

HANGER ATTACHMENT TYPE	ALLOWABLE VERTICAL LOAD Ta [1,2] LBS	ATR HANGER DIA. INCH	POWER-STUD+ SD1 CONCRETE ANCHOR (ICC ESR-2818) SPECIAL INSPECTION REQ'D						
			DIA. da INCH	MIN EFF. EMBED. hef INCH	MIN HOLE DEPTH ho INCH	MIN BASE TH. ha INCH	MIN EDGE Cmin INCH	MIN SPACING Smin INCH	TORQUE REQ'D FT-LBS
38A TO 38J	910	3/8	3/8	2	2 5/8	4	4 1/2	6	20
38A TO 38K	1120	3/8	1/2	3 1/4	4	6	4 1/2	9 3/4	40
50A TO 50K	1120	1/2							
63A TO 63K	1120	5/8							
50A TO 50M	1740	1/2	5/8	2 3/4	3 3/4	6	6	8 1/4	80
63A TO 63M	1740	5/8							
75A TO 75M	1740	3/4							

SEE DETAIL M0.00 FOR SECTION NOTES

[1] ALLOWABLE LOADS HAVE BEEN INCREASED BY A FACTOR OF 1.2 FOR LOAD COMBINATIONS INCLUDING OVERSTRENGTH, Ω_0, PER ASCE 7-10 SEC. 12.14.3.2.3.

[2] FOR SLWC SLAB AND BEAM, REDUCE ALLOWABLE VERTICAL LOAD BY MULTIPLYING ALLOWABLE LOAD BY A FACTOR OF 0.6.

MASON WEST, INC.
1601 E. Miraloma Ave. Placentia, CA 92870
TEL (714) 630 - 0701, www.masonwest.com

Jiefu "Jeff" Zhang, SE
California SE No. S5270

PAGE
M1.30

HANGER ATTACHMENT TO CONCRETE SLAB AND BEAM WITH (2) POWER-STUD+ SD1 CONCRETE ANCHORS

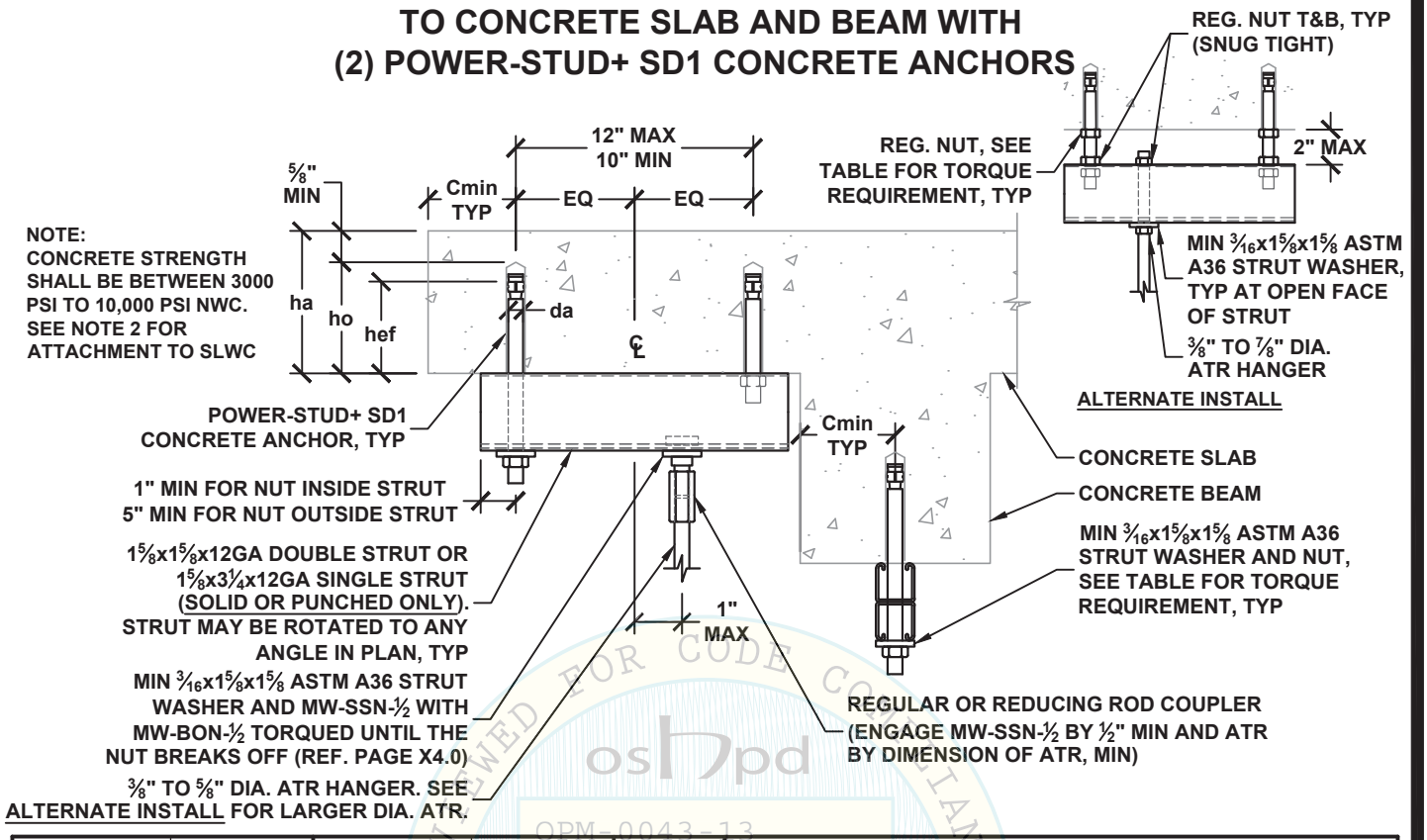

HANGER ATTACHMENT TYPE	STEEL COMPONENT ALLOWABLE VERTICAL LOAD Ta LBS	HANGER ATTACHMENT TYPE	CONCRETE ANCHOR ALLOWABLE VERTICAL LOAD Tac [1,2] LBS	ATR HANGER DIA. INCH	POWER-STUD+ SD1 CONCRETE ANCHORS (ICC ESR-2818) SPECIAL INSPECTION REQ'D						
					DIA. da INCH	MIN EFF. EMBED. hef INCH	MIN HOLE DEPTH ho INCH	MIN BASE TH. ha INCH	MIN EDGE Cmin INCH	MIN SPACING Smin INCH	TORQUE REQ'D FT-LBS
38A TO 38N	2400	38A TO 38L	1520	3/8	3/8	2	2 5/8	4	4 1/2	6	20
50A TO 50P	2620	50A TO 50L	1520	1/2							
63A TO 63P	2620	63A TO 63L	1520	5/8							
75A TO 75P	2620	75A TO 75L	1520	3/4							
88A TO 88P	2620	88A TO 88L	1520	7/8							
38A TO 38N	2400	38A TO 38M	1870	3/8	1/2	3 1/4	4	6	4 1/2	9 3/4	40
50A TO 50P	2620	50A TO 50M	1870	1/2							
63A TO 63P	2620	63A TO 63M	1870	5/8							
75A TO 75P	2620	75A TO 75M	1870	3/4							
88A TO 88P	2620	88A TO 88M	1870	7/8							

SEE DETAIL M0.00 FOR SECTION NOTES

[1] ALLOWABLE LOADS HAVE BEEN INCREASED BY A FACTOR OF 1.2 FOR LOAD COMBINATIONS INCLUDING OVERSTRENGTH, Ω_0, PER ASCE 7-10 SEC. 12.14.3.2.3.

[2] FOR SLWC SLAB AND BEAM, REDUCE CONCRETE ANCHOR ALLOWABLE VERTICAL LOAD BY MULTIPLYING ALLOWABLE LOAD BY A FACTOR OF 0.6.

MASON WEST, INC.
1601 E. Miraloma Ave. Placentia, CA 92870
TEL (714) 630 - 0701, www.masonwest.com

Jiefu "Jeff" Zhang, SE
California SE No. S5270

PAGE
M1.31

OPM-0043-13
Reviewed for Code Compliance by Jeffrey Y. Kikumoto
DATE 06/23/2016

HANGER ATTACHMENT TO CONCRETE SLAB AND BEAM WITH (2) POWER-STUD+ SD1 CONCRETE ANCHORS

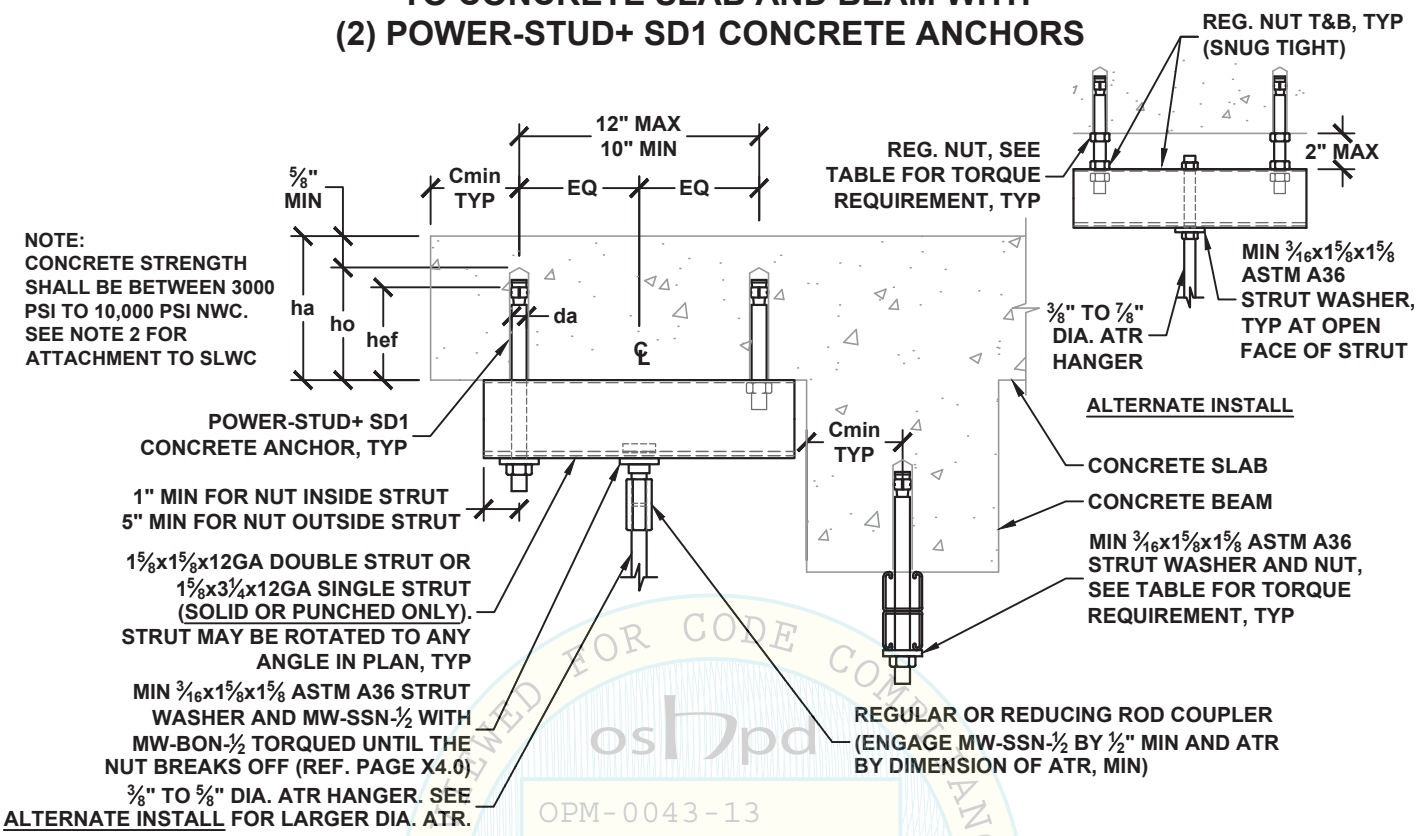

REVIEWED FOR CODE COMPLIANCE
OPM-0043-13
BY: Jeffrey Y. Kikumoto
DATE: 06/23/2016
CALIFORNIA BUILDING CODE 2013

HANGER ATTACHMENT TYPE	STEEL COMPONENT ALLOWABLE VERTICAL LOAD Ta LBS	HANGER ATTACHMENT TYPE	CONCRETE ANCHOR ALLOWABLE VERTICAL LOAD Tac [1,2] LBS	ATR HANGER DIA. INCH	POWER-STUD+ SD1 CONCRETE ANCHORS (ICC ESR-2818) SPECIAL INSPECTION REQ'D						
					DIA. da INCH	MIN EFF. EMBED. hef INCH	MIN HOLE DEPTH ho INCH	MIN BASE TH. ha INCH	MIN EDGE Cmin INCH	MIN SPACING Smin INCH	TORQUE REQ'D FT-LBS
38A TO 38N	2400	38A TO 38M	1820	3/8	3/8	2	2 5/8	4	4 1/2	6	20
50A TO 50P	2620	50A TO 50M	1820	1/2							
63A TO 63P	2620	63A TO 63M	1820	5/8							
75A TO 75P	2620	75A TO 75M	1820	3/4							
88A TO 88P	2620	88A TO 88N	1820	7/8							
38A TO 38N	2400	38A TO 38N	2240	3/8	1/2	3 1/4	4	6	4 1/2	9 3/4	40
50A TO 50P	2620	50A TO 50N	2240	1/2							
63A TO 63P	2620	63A TO 63N	2240	5/8							
75A TO 75P	2620	75A TO 75N	2240	3/4							
88A TO 88P	2620	88A TO 88N	2240	7/8							

SEE DETAIL M0.00 FOR SECTION NOTES

[1] ALLOWABLE LOADS HAVE BEEN INCREASED BY A FACTOR OF 1.2 FOR LOAD COMBINATIONS INCLUDING OVERSTRENGTH, Ω_0, PER ASCE 7-10 SEC. 12.14.3.2.3.

[2] FOR SLWC SLAB AND BEAM, REDUCE CONCRETE ANCHOR ALLOWABLE VERTICAL LOAD BY MULTIPLYING ALLOWABLE LOAD BY A FACTOR OF 0.6.

MASON WEST, INC.
1601 E. Miraloma Ave. Placentia, CA 92870
TEL (714) 630 - 0701, www.masonwest.com

Jiefu "Jeff" Zhang, SE
California SE No. S5270

PAGE
M1.31.1

HANGER ATTACHMENT
TO CONCRETE SLAB AND BEAM WITH
(2) POWER-STUD+ SD1 CONCRETE ANCHORS

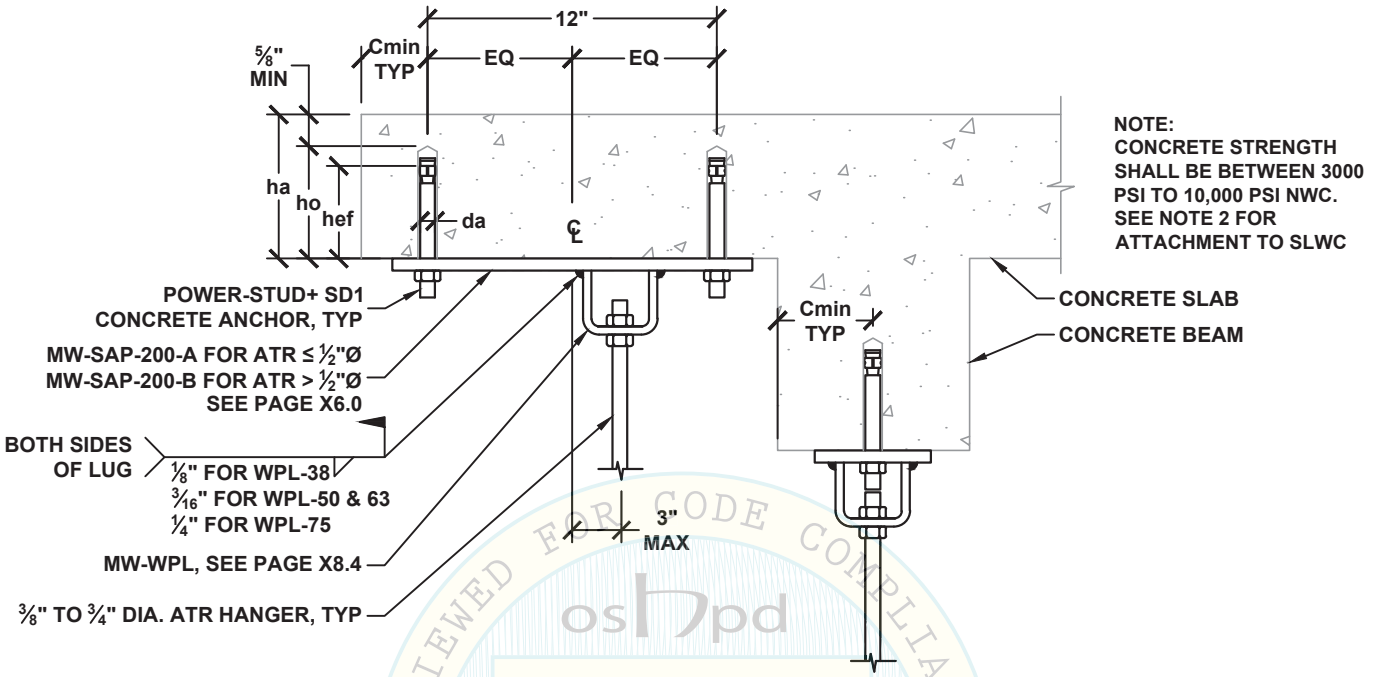

REVIEWED FOR CODE COMPLIANCE
CALIFORNIA BUILDING CODE 2013
oshpd
OPM-0043-13
BY: Jeffrey Y. Kikumoto
DATE: 06/23/2016

HANGER ATTACHMENT TYPE	STEEL COMPONENT ALLOWABLE VERTICAL LOAD Ta LBS	HANGER ATTACHMENT TYPE	CONCRETE ANCHOR ALLOWABLE VERTICAL LOAD Tac [1,2] LBS	ATR HANGER DIA. INCH	POWER-STUD+ SD1 CONCRETE ANCHORS (ICC ESR-2818) SPECIAL INSPECTION REQ'D						
					DIA. da INCH	MIN EFF. EMBED. hef INCH	MIN HOLE DEPTH ho INCH	MIN BASE TH. ha INCH	MIN EDGE Cmin INCH	MIN SPACING Smin INCH	TORQUE REQ'D FT-LBS
38A TO 38H	720	38A TO 38N	2320	⅜	⅝	2¾	3¾	6	6	8¼	80
50A TO 50K	1080	50A TO 50N	2320	½							
63A TO 63M	1930	63A TO 63N	2320	⅝							
75A TO 75M	1930	75A TO 75N	2320	¾							

SEE DETAIL M0.00 FOR SECTION NOTES

[1] ALLOWABLE LOADS HAVE BEEN INCREASED BY A FACTOR OF 1.2 FOR LOAD COMBINATIONS INCLUDING OVERSTRENGTH, Ω_0, PER ASCE 7-10 SEC. 12.14.3.2.3.

[2] FOR SLWC SLAB AND BEAM, REDUCE CONCRETE ANCHOR ALLOWABLE VERTICAL LOAD BY MULTIPLYING ALLOWABLE LOAD BY A FACTOR OF 0.6.

MASON WEST, INC.
1601 E. Miraloma Ave. Placentia, CA 92870
TEL (714) 630 - 0701, www.masonwest.com

Jiefu "Jeff" Zhang, SE
California SE No. S5270

PAGE
M1.32

HANGER ATTACHMENT TO CONCRETE SLAB AND BEAM WITH (4) POWER-STUD+ SD1 CONCRETE ANCHORS

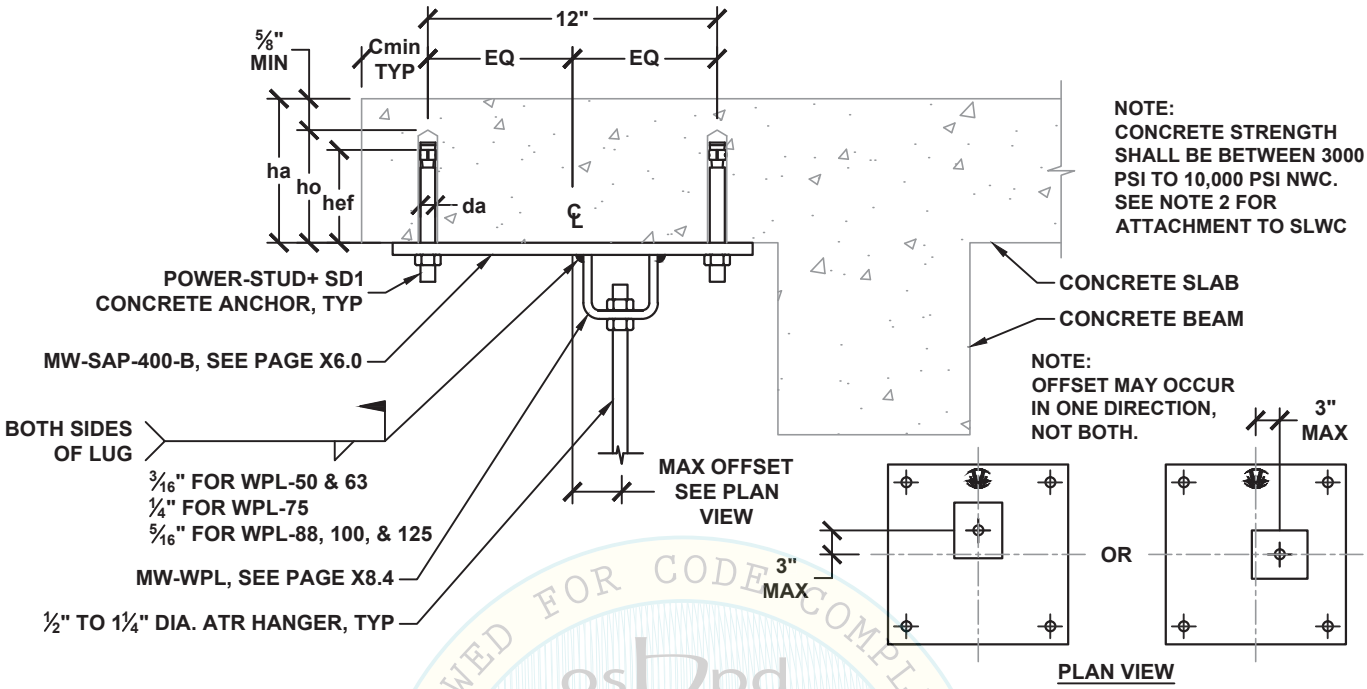

OSHPD
OPM-0043-13
BY: Jeffrey Y. Kikumoto
DATE: 06/23/2016
REVIEWED FOR CODE COMPLIANCE

HANGER ATTACHMENT TYPE	STEEL COMPONENT ALLOWABLE VERTICAL LOAD Ta LBS	HANGER ATTACHMENT TYPE	CONCRETE ANCHOR ALLOWABLE VERTICAL LOAD Tac [1,2] LBS	ATR HANGER DIA. INCH	POWER-STUD+ SD1 CONCRETE ANCHORS (ICC ESR-2818) SPECIAL INSPECTION REQ'D						
					DIA. da INCH	MIN EFF. EMBED. hef INCH	MIN HOLE DEPTH ho INCH	MIN BASE TH. ha INCH	MIN EDGE Cmin INCH	MIN SPACING Smin INCH	TORQUE REQ'D FT-LBS
50A TO 50L	1320	50A TO 50Q	4640	1/2	5/8	2 3/4	3 3/4	6	6	8 1/4	80
63A TO 63P	2880	63A TO 63Q	4640	5/8							
75A TO 75Q	3600	75A TO 75Q	4640	3/4							
88A TO 88Q	3600	88A TO 88Q	4640	7/8							
100A TO 100Q	3600	100A TO 100Q	4640	1							
125A TO 125Q	3600	125A TO 125Q	4640	1 1/4							

SEE DETAIL M0.00 FOR SECTION NOTES

[1] ALLOWABLE LOADS HAVE BEEN INCREASED BY A FACTOR OF 1.2 FOR LOAD COMBINATIONS INCLUDING OVERSTRENGTH, Ω_0, PER ASCE 7-10 SEC. 12.14.3.2.3.

[2] FOR SLWC SLAB AND BEAM, REDUCE CONCRETE ANCHOR ALLOWABLE VERTICAL LOAD BY MULTIPLYING ALLOWABLE LOAD BY A FACTOR OF 0.6.

MASON WEST, INC.
1601 E. Miraloma Ave. Placentia, CA 92870
TEL (714) 630 - 0701, www.masonwest.com

Jiefu "Jeff" Zhang, SE
California SE No. S5270

HANGER ATTACHMENT TO CONCRETE SLAB AND BEAM WITH (1) MASON IND. N.Y. SAS(E) CONCRETE ANCHOR

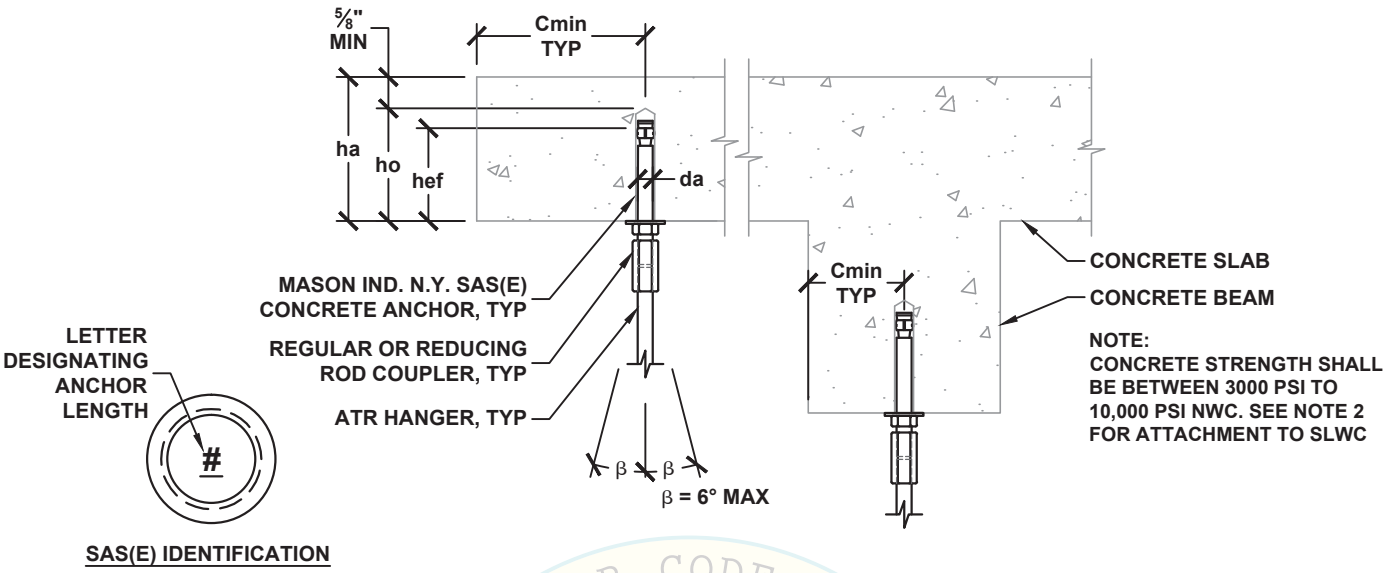

HANGER ATTACHMENT TYPE	ALLOWABLE VERTICAL LOAD Ta [1,2] LBS	ATR HANGER DIA. INCH	MASON IND. N.Y. SAS(E) CONCRETE ANCHORS (ICC ESR-3037) SPECIAL INSPECTION REQ'D						
			DIA. da INCH	MIN EFF. EMBED. hef INCH	MIN HOLE DEPTH ho INCH	MIN BASE TH. ha INCH	MIN EDGE Cmin INCH	MIN SPACING Smin INCH	TORQUE REQ'D FT-LBS
38A TO 38K	1240	⅜	⅜	2½	3	4½	6	7½	30
38A TO 38L	1290	⅜	½	2¼	3	4½	7	6¾	60
50A TO 50L	1290	½							
63A TO 63L	1290	⅝							
38A TO 38M	1680	⅜	½	3⅜	4⅛	6	7	10⅛	60
50A TO 50M	1680	½							
63A TO 63M	1680	⅝							
50A TO 50P	3090	½	⅝	4½	5⅜	8	7	13½	90
63A TO 63P	3090	⅝							
75A TO 75P	3090	¾							
63A TO 63Q	3810	⅝	¾	5	6	9	7	15	150
75A TO 75Q	3810	¾							
88A TO 88Q	3810	⅞							

SEE DETAIL M0.00 FOR SECTION NOTES

[1] ALLOWABLE LOADS HAVE BEEN INCREASED BY A FACTOR OF 1.2 FOR LOAD COMBINATIONS INCLUDING OVERSTRENGTH, Ω_0, PER ASCE 7-10 SEC. 12.14.3.2.3.

[2] FOR SLWC SLAB AND BEAM, REDUCE ALLOWABLE VERTICAL LOAD BY MULTIPLYING ALLOWABLE LOAD BY A FACTOR OF 0.6.

REVIEWED FOR CODE COMPLIANCE
OSHPD
OPM-0043-13
BY: Jeffrey Kikumoto
DATE: 06/23/2016
CALIFORNIA BUILDING CODE

MASON WEST, INC.
1601 E. Miraloma Ave. Placentia, CA 92870
TEL (714) 630 - 0701, www.masonwest.com

Jiefu "Jeff" Zhang, SE
California SE No. S5270

HANGER ATTACHMENT TO CONCRETE SLAB AND BEAM WITH (2) MASON IND. N.Y. SAS(E) CONCRETE ANCHORS

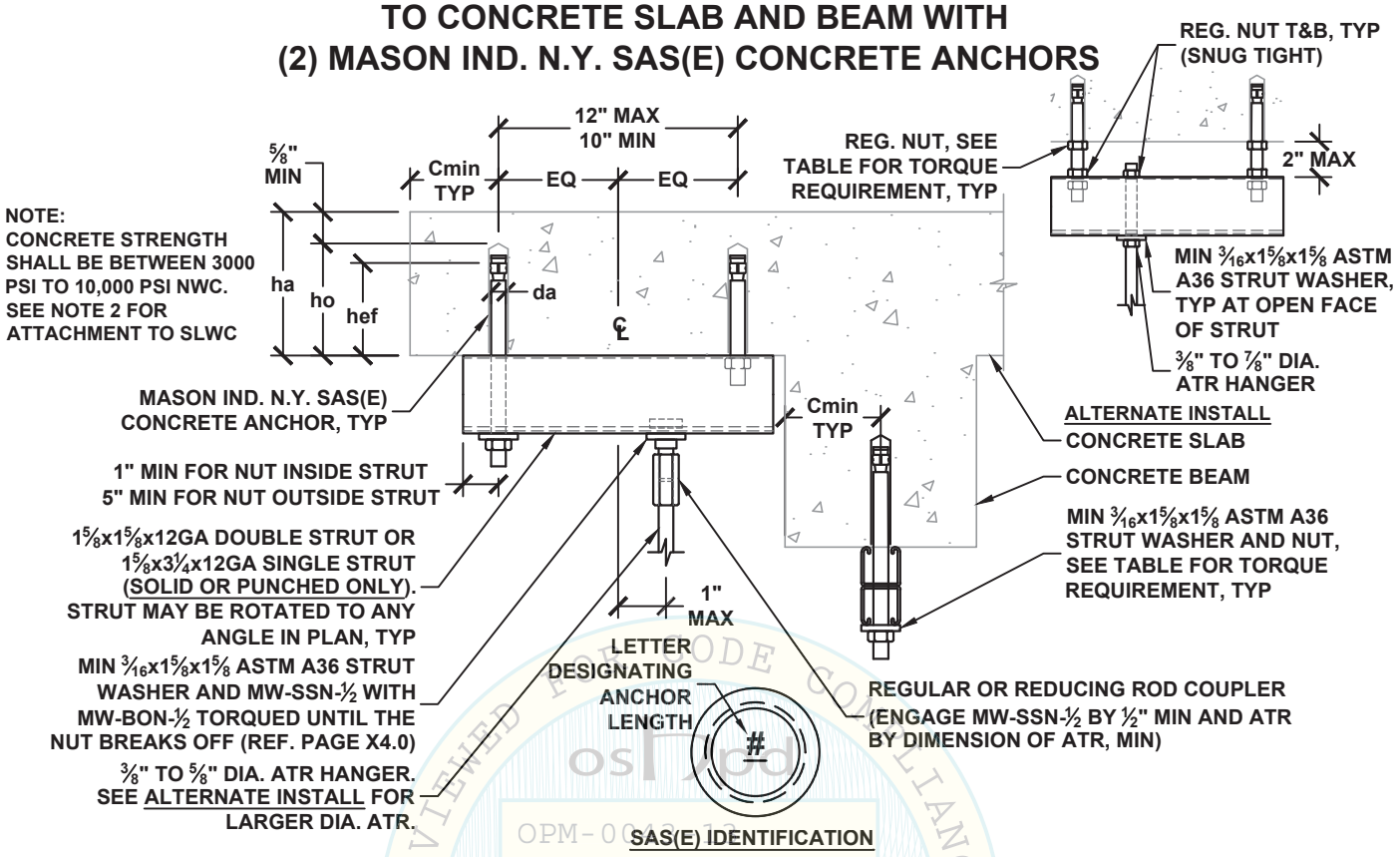

HANGER ATTACHMENT TYPE	STEEL COMPONENT ALLOWABLE VERTICAL LOAD Ta LBS	HANGER ATTACHMENT TYPE	CONCRETE ANCHOR ALLOWABLE VERTICAL LOAD Tac [1,2] LBS	ATR HANGER DIA. INCH	MASON IND. N.Y. SAS(E) CONCRETE ANCHORS (ICC ESR-3037) SPECIAL INSPECTION REQ'D						
					DIA. da INCH	MIN EFF. EMBED. hef INCH	MIN HOLE DEPTH ho INCH	MIN BASE TH. ha INCH	MIN EDGE Cmin INCH	MIN SPACING Smin INCH	TORQUE REQ'D FT-LBS
38A TO 38N	2400	38A TO 38N	2070	3/8	3/8	2½	3	4½	6	7½	30
50A TO 50P	2620	50A TO 50N	2070	½							
63A TO 63P	2620	63A TO 63N	2070	5/8							
75A TO 75P	2620	75A TO 75N	2070	¾							
88A TO 88P	2620	88A TO 88N	2070	7/8							
38A TO 38N	2400	38A TO 38N	2150	3/8	½	2¼	3	4½	7	6¾	60
50A TO 50P	2620	50A TO 50N	2150	½							
63A TO 63P	2620	63A TO 63N	2150	5/8							
75A TO 75P	2620	75A TO 75N	2150	¾							
88A TO 88P	2620	88A TO 88N	2150	7/8							

SEE DETAIL M0.00 FOR SECTION NOTES

[1] ALLOWABLE LOADS HAVE BEEN INCREASED BY A FACTOR OF 1.2 FOR LOAD COMBINATIONS INCLUDING OVERSTRENGTH, Ω_0, PER ASCE 7-10 SEC. 12.14.3.2.3.

[2] FOR SLWC SLAB AND BEAM, REDUCE CONCRETE ANCHOR ALLOWABLE VERTICAL LOAD BY MULTIPLYING ALLOWABLE LOAD BY A FACTOR OF 0.6.

MASON WEST, INC.
1601 E. Miraloma Ave. Placentia, CA 92870
TEL (714) 630 - 0701, www.masonwest.com

Jiefu "Jeff" Zhang, SE
California SE No. S5270

PAGE
M1.41

OSHPD REVIEWED FOR CODE COMPLIANCE
OPM-0043-13
BY: Jeffrey Y. Kikumoto
DATE: 06/23/2016
CALIFORNIA BUILDING CODE 2013

HANGER ATTACHMENT TO CONCRETE SLAB AND BEAM WITH (2) MASON IND. N.Y. SAS(E) CONCRETE ANCHORS

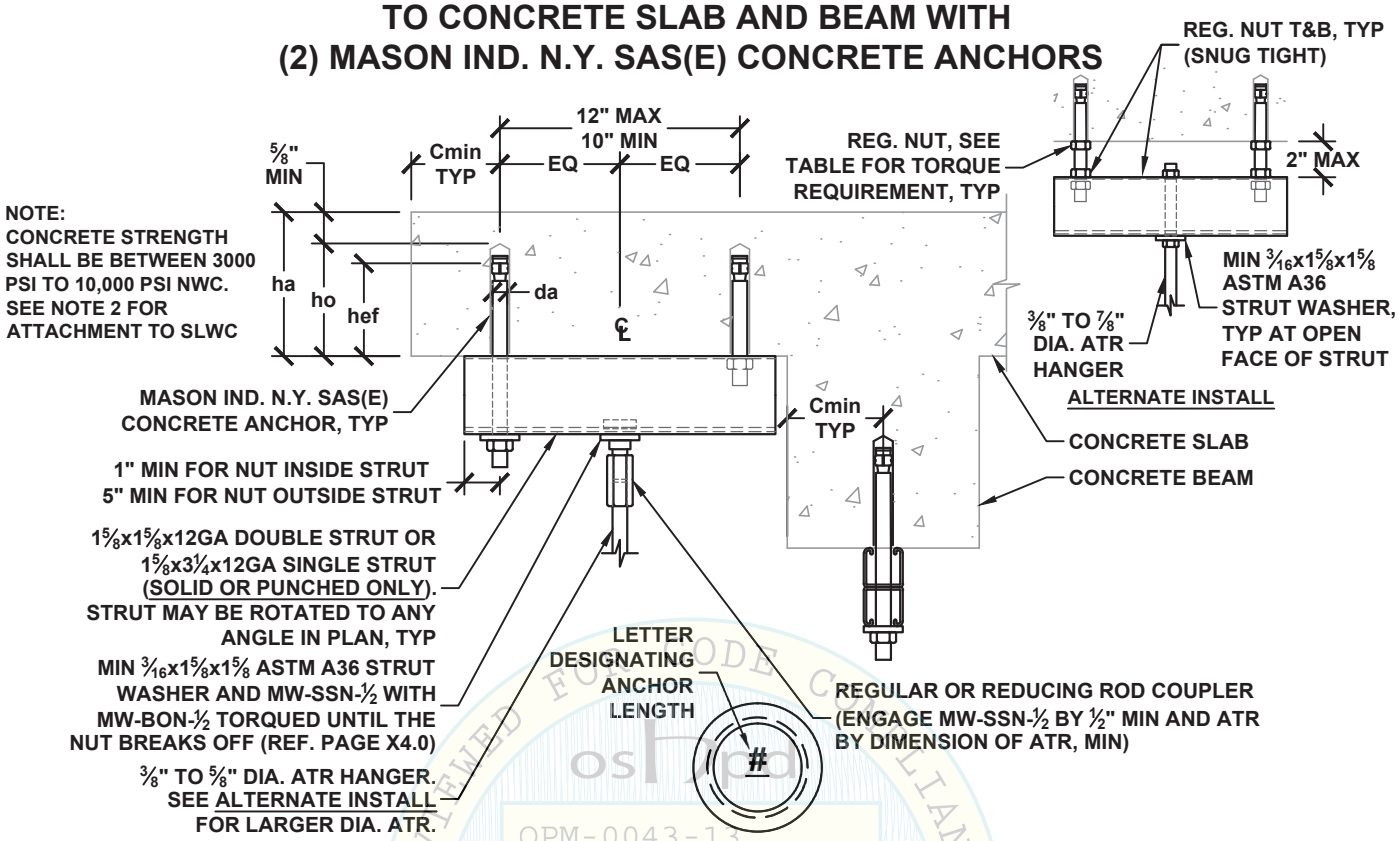

SAS(E) IDENTIFICATION

HANGER ATTACHMENT TYPE	STEEL COMPONENT ALLOWABLE VERTICAL LOAD Ta LBS	HANGER ATTACHMENT TYPE	CONCRETE ANCHOR ALLOWABLE VERTICAL LOAD Tac [1,2] LBS	ATR HANGER DIA. INCH	MASON IND. N.Y. SAS(E) CONCRETE ANCHORS (ICC ESR-3037) SPECIAL INSPECTION REQ'D						
					DIA. da INCH	MIN EFF. EMBED. hef INCH	MIN HOLE DEPTH ho INCH	MIN BASE TH. ha INCH	MIN EDGE Cmin INCH	MIN SPACING Smin INCH	TORQUE REQ'D FT-LBS
38A TO 38N	2400	38A TO 38N	2480	3/8	3/8	2 1/2	3	4 1/2	6	7 1/2	30
50A TO 50P	2620	50A TO 50N	2480	1/2							
63A TO 63P	2620	63A TO 63N	2480	5/8							
75A TO 75P	2620	75A TO 75N	2480	3/4							
88A TO 88P	2620	88A TO 88N	2480	7/8							
38A TO 38N	2400	38A TO 38P	2580	3/8	1/2	2 1/4	3	4 1/2	7	6 3/4	60
50A TO 50P	2620	50A TO 50P	2580	1/2							
63A TO 63P	2620	63A TO 63P	2580	5/8							
75A TO 75P	2620	75A TO 75P	2580	3/4							
88A TO 88P	2620	88A TO 88P	2580	7/8							

SEE DETAIL M0.00 FOR SECTION NOTES

[1] ALLOWABLE LOADS HAVE BEEN INCREASED BY A FACTOR OF 1.2 FOR LOAD COMBINATIONS INCLUDING OVERSTRENGTH, Ω_0, PER ASCE 7-10 SEC. 12.14.3.2.3.

[2] FOR SLWC SLAB AND BEAM, REDUCE CONCRETE ANCHOR ALLOWABLE VERTICAL LOAD BY MULTIPLYING ALLOWABLE LOAD BY A FACTOR OF 0.6.

MASON WEST, INC.
1601 E. Miraloma Ave. Placentia, CA 92870
TEL (714) 630 - 0701, www.masonwest.com

Jiefu "Jeff" Zhang, SE
California SE No. S5270

PAGE
M1.41.1

OPM-0043-13 BY: Jeffrey Y. Kikumoto DATE: 06/23/2016 REVIEWED FOR CODE COMPLIANCE CALIFORNIA BUILDING CODE 2013

HANGER ATTACHMENT TO CONCRETE SLAB AND BEAM WITH (2) MASON IND. N.Y. SAS(E) CONCRETE ANCHORS

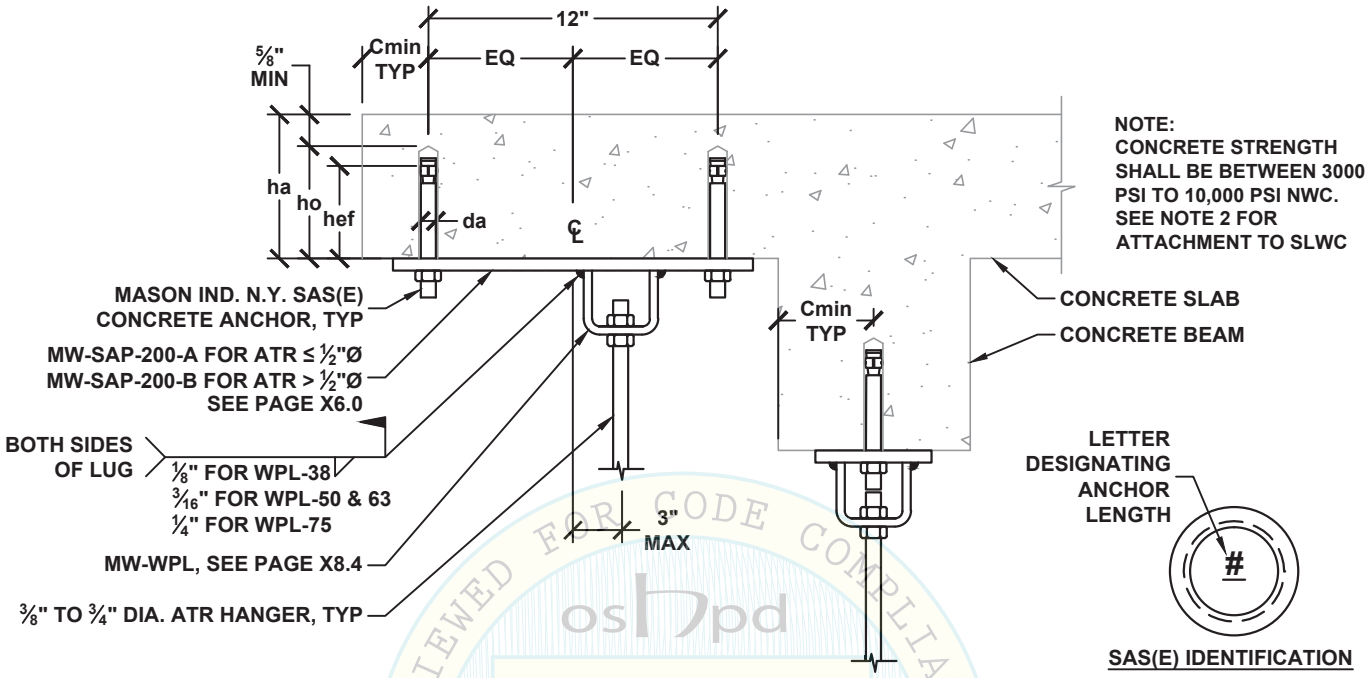

REVIEWED FOR CODE COMPLIANCE
CALIFORNIA BUILDING CODE 2013
oshpd
OPM-0043-13
BY: Jeffrey Y. Kikumoto
DATE: 06/23/2016

HANGER ATTACHMENT TYPE	STEEL COMPONENT ALLOWABLE VERTICAL LOAD Ta LBS	HANGER ATTACHMENT TYPE	CONCRETE ACHOR ALLOWABLE VERTICAL LOAD Tac [1,2] LBS	ATR HANGER DIA. INCH	MASON IND. N.Y. SAS(E) CONCRETE ANCHORS (ICC ESR-3037) SPECIAL INSPECTION REQ'D						
					DIA. da INCH	MIN EFF. EMBED. hef INCH	MIN HOLE DEPTH ho INCH	MIN BASE TH. ha INCH	MIN EDGE Cmin INCH	MIN SPACING Smin INCH	TORQUE REQ'D FT-LBS
38A TO 38H	720	38A TO 38H	4120	⅜	⅝	4½	5⅜	8	7	13½	90
50A TO 50K	1080	50A TO 50K	4120	½							
63A TO 63M	1930	63A TO 63M	4120	⅝							
75A TO 75M	1930	75A TO 75M	4120	¾							

SEE DETAIL M0.00 FOR SECTION NOTES

[1] ALLOWABLE LOADS HAVE BEEN INCREASED BY A FACTOR OF 1.2 FOR LOAD COMBINATIONS INCLUDING OVERSTRENGTH, Ω_0, PER ASCE 7-10 SEC. 12.14.3.2.3.

[2] FOR SLWC SLAB AND BEAM, REDUCE CONCRETE ANCHOR ALLOWABLE VERTICAL LOAD BY MULTIPLYING ALLOWABLE LOAD BY A FACTOR OF 0.6.

MASON WEST, INC.
1601 E. Miraloma Ave. Placentia, CA 92870
TEL (714) 630 - 0701, www.masonwest.com

Jiefu "Jeff" Zhang, SE
California SE No. S5270

PAGE
M1.42

HANGER ATTACHMENT TO CONCRETE SLAB AND BEAM WITH (4) MASON IND. N.Y. SAS(E) CONCRETE ANCHORS

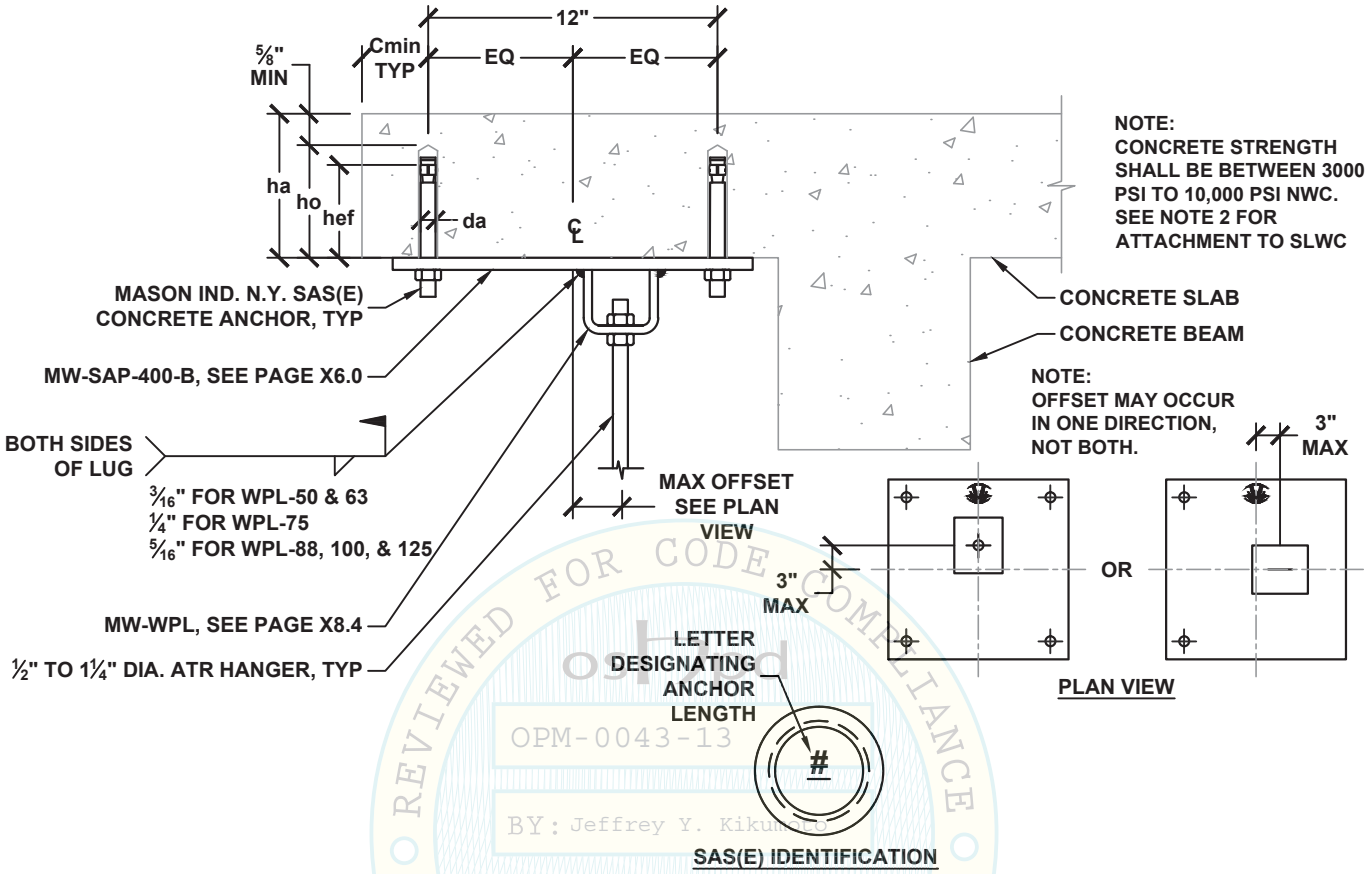

OSHPD
OPM-0043-13
BY: Jeffrey Y. Kikumoto
DATE: 06/23/2016
REVIEWED FOR CODE COMPLIANCE
CALIFORNIA BUILDING CODE

HANGER ATTACHMENT TYPE	STEEL COMPONENT ALLOWABLE VERTICAL LOAD Ta LBS	HANGER ATTACHMENT TYPE	CONCRETE ANCHOR ALLOWABLE VERTICAL LOAD Tac [1,2] LBS	ATR HANGER DIA. INCH	MASON IND. N.Y. SAS(E) CONCRETE ANCHORS (ICC ESR-3037) SPECIAL INSPECTION REQ'D						
					DIA. da INCH	MIN EFF. EMBED. hef INCH	MIN HOLE DEPTH ho INCH	MIN BASE TH. ha INCH	MIN EDGE Cmin INCH	MIN SPACING Smin INCH	TORQUE REQ'D FT-LBS
50A TO 50L	1320	50A TO 50S	8240	½	⅝	4½	5⅜	8	7	13½	90
63A TO 63P	2880	63A TO 63S	8240	⅝							
75A TO 75Q	3600	75A TO 75S	8240	¾							
88A TO 88Q	3600	88A TO 88S	8240	⅞							
100A TO 100Q	3600	100A TO 100S	8240	1							
125A TO 125Q	3600	125A TO 125S	8240	1¼							

SEE DETAIL M0.00 FOR SECTION NOTES

[1] ALLOWABLE LOADS HAVE BEEN INCREASED BY A FACTOR OF 1.2 FOR LOAD COMBINATIONS INCLUDING OVERSTRENGTH, Ω_0, PER ASCE 7-10 SEC. 12.14.3.2.3.

[2] FOR SLWC SLAB AND BEAM, REDUCE CONCRETE ANCHOR ALLOWABLE VERTICAL LOAD BY MULTIPLYING ALLOWABLE LOAD BY A FACTOR OF 0.6.

MASON WEST, INC.
1601 E. Miraloma Ave. Placentia, CA 92870
TEL (714) 630 - 0701, www.masonwest.com

Jiefu "Jeff" Zhang, SE
California SE No. S5270

PAGE
M1.43

HANGER ATTACHMENT TO CONCRETE SLAB AND BEAM WITH (1) POWER-STUD+ SD2 CONCRETE ANCHOR

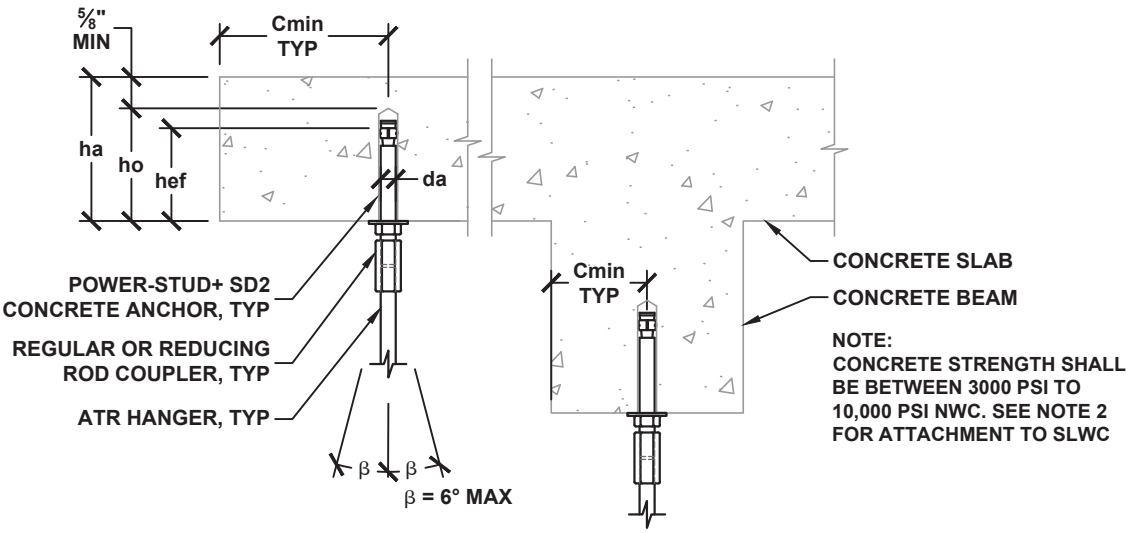

HANGER ATTACHMENT TYPE	ALLOWABLE VERTICAL LOAD Ta [1,2] LBS	MIN ATR HANGER DIA. INCH	POWER-STUD+ SD2 CONCRETE ANCHOR (ICC ESR-2502) SPECIAL INSPECTION REQ'D						
			DIA. da INCH	MIN EFF. EMBED. hef INCH	MIN HOLE DEPTH ho INCH	MIN BASE TH. ha INCH	MIN EDGE Cmin INCH	MIN SPACING Smin INCH	TORQUE REQ'D FT-LBS
38A TO 38J	970	3/8	3/8	2	2 5/8	4	4 1/2	6	20
38A TO 38K	1080	3/8							
50A TO 50K	1080	1/2	1/2	2	2 3/4	4 1/2	4 1/2	6	40
63A TO 63K	1080	5/8							
38A TO 38M	1960	3/8							
50A TO 50M	1960	1/2	1/2	3 1/4	4	6	6	9 3/4	40
63A TO 63M	1960	5/8							
50A TO 50N	2230	1/2							
63A TO 63N	2230	5/8	5/8	3 1/4	4 1/4	6	6	9 3/4	60
75A TO 75N	2230	3/4							
50A TO 50P	3340	1/2							
63A TO 63P	3340	5/8	5/8	4 1/4	5 1/4	6 1/2	12	12 3/4	60
75A TO 75P	3340	3/4							
63A TO 63P	2770	5/8							
75A TO 75P	2770	3/4	3/4	3 3/4	5	7	12	11 1/4	110
88A TO 88P	2770	7/8							

SEE DETAIL M0.00 FOR SECTION NOTES

[1] ALLOWABLE LOADS HAVE BEEN INCREASED BY A FACTOR OF 1.2 FOR LOAD COMBINATIONS INCLUDING OVERSTRENGTH, Ω_0, PER ASCE 7-10 SEC. 12.14.3.2.3.

[2] FOR SLWC SLAB AND BEAM, REDUCE ALLOWABLE VERTICAL LOAD BY MULTIPLYING ALLOWABLE LOAD BY A FACTOR OF 0.68.

REVIEWED FOR CODE COMPLIANCE
OPM-0043-13
BY: Jeffrey T. Kikumoto
DATE: 06/23/2016
CALIFORNIA BUILDING CODE, 2013

MASON WEST, INC.
1601 E. Miraloma Ave. Placentia, CA 92870
TEL (714) 630 - 0701, www.masonwest.com

Jiefu "Jeff" Zhang, SE
California SE No. S5270

PAGE
M1.60

HANGER ATTACHMENT TO CONCRETE SLAB AND BEAM WITH (2) POWER-STUD+ SD2 CONCRETE ANCHORS

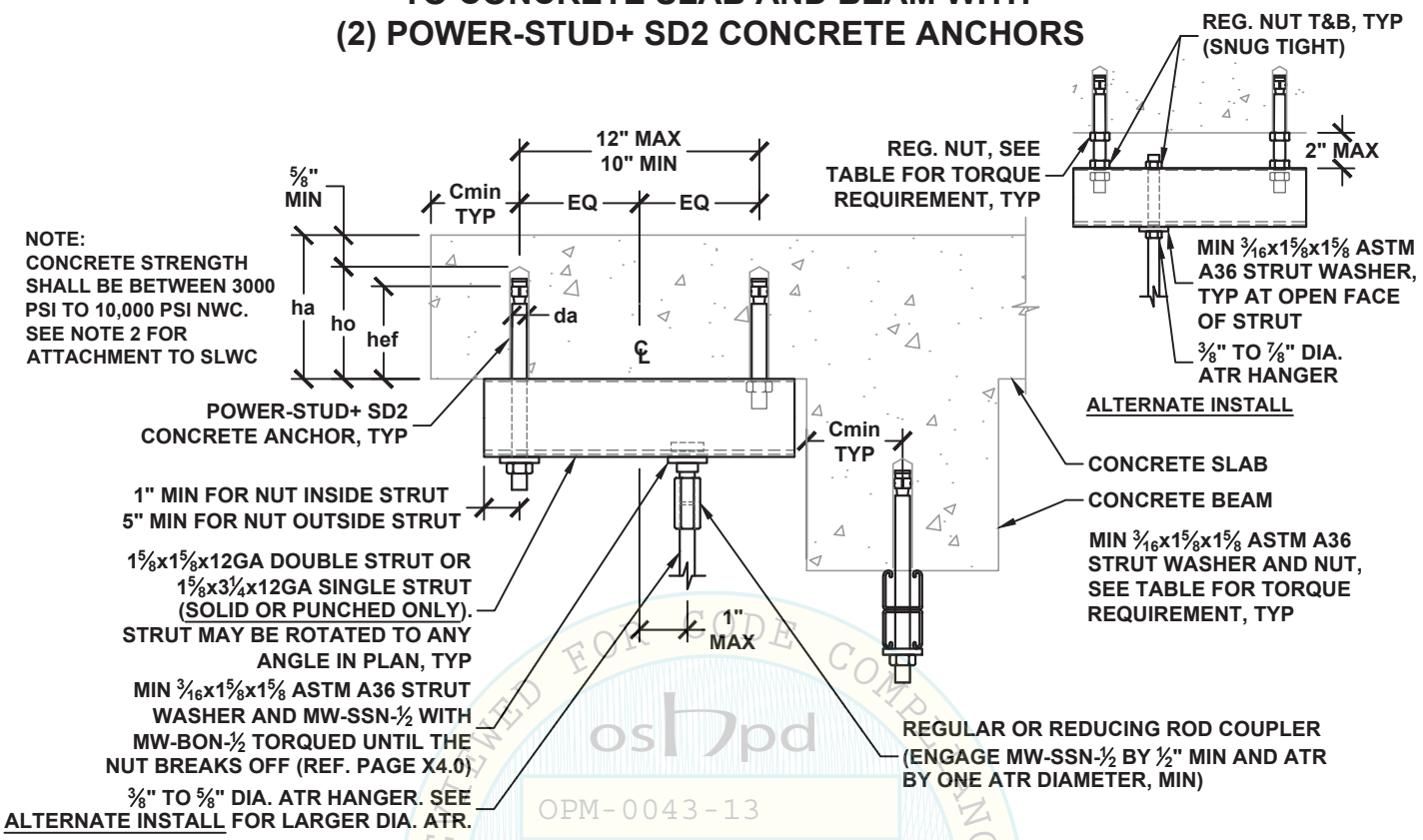

HANGER ATTACHMENT TYPE	STEEL COMPONENT ALLOWABLE VERTICAL LOAD Ta LBS	HANGER ATTACHMENT TYPE	CONCRETE ANCHOR ALLOWABLE VERTICAL LOAD Tac [1,2] LBS	ATR HANGER DIA. INCH	POWER-STUD+ SD2 CONCRETE ANCHOR (ICC ESR-2502) SPECIAL INSPECTION REQ'D						
					DIA. da INCH	MIN EFF. EMBED. hef INCH	MIN HOLE DEPTH ho INCH	MIN BASE TH. ha INCH	MIN EDGE Cmin INCH	MIN SPACING Smin INCH	TORQUE REQ'D FT-LBS
38A TO 38N	2400	38A TO 38M	1620	3/8	3/8	2	2 5/8	4	4 1/2	6	20
50A TO 50P	2620	50A TO 50M	1620	1/2							
63A TO 63P	2620	63A TO 63M	1620	5/8							
75A TO 75P	2620	75A TO 75M	1620	3/4							
88A TO 88P	2620	88A TO 88M	1620	7/8							
38A TO 38N	2400	38A TO 38P	3270	3/8	1/2	3 1/4	4	6	6	9 3/4	40
50A TO 50P	2620	50A TO 50P	3270	1/2							
63A TO 63P	2620	63A TO 63P	3270	5/8							
75A TO 75P	2620	75A TO 75P	3270	3/4							
88A TO 88P	2620	88A TO 88P	3270	7/8							

SEE DETAIL M0.00 FOR SECTION NOTES

[1] ALLOWABLE LOADS HAVE BEEN INCREASED BY A FACTOR OF 1.2 FOR LOAD COMBINATIONS INCLUDING OVERSTRENGTH, Ω_0, PER ASCE 7-10 SEC. 12.14.3.2.3.

[2] FOR SLWC SLAB AND BEAM, REDUCE CONCRETE ANCHOR ALLOWABLE VERTICAL LOAD BY MULTIPLYING ALLOWABLE LOAD BY A FACTOR OF 0.68.

[3] ATR HANGER PERMITTED FOR COMPRESSION AND TENSION LOADING CONDITIONS ONLY. NO SHEAR LOADING.

MASON WEST, INC.
1601 E. Miraloma Ave. Placentia, CA 92870
TEL (714) 630 - 0701, www.masonwest.com

Jiefu "Jeff" Zhang, SE
California SE No. S5270

PAGE
M1.61

OPM-0043-13
BY: Jeffrey Y. Kikumoto
DATE: 06/23/2016
CALIFORNIA BUILDING CODE 2013

HANGER ATTACHMENT TO CONCRETE SLAB AND BEAM WITH (2) POWER-STUD+ SD2 CONCRETE ANCHORS

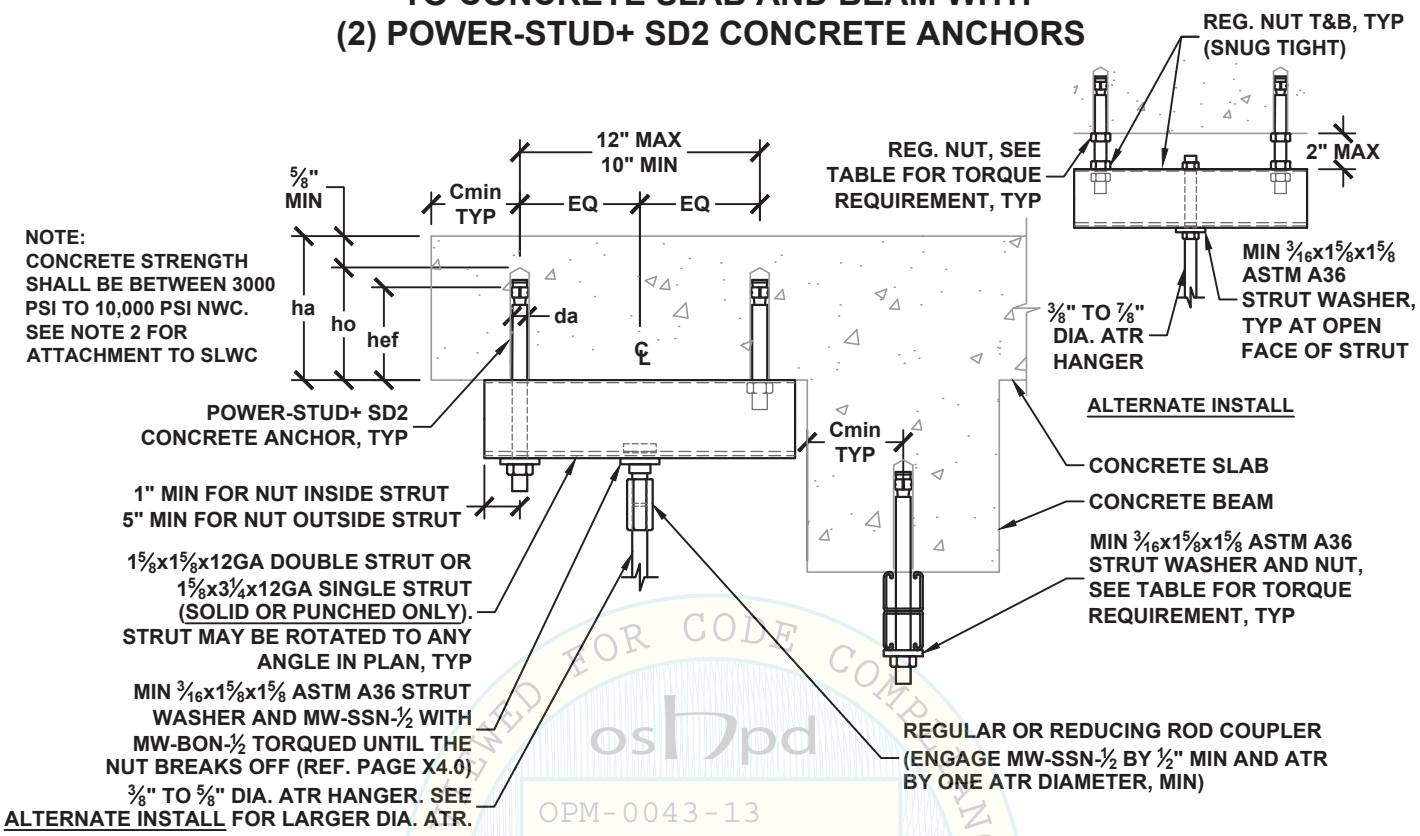

OPM-0043-13
BY: Jeffrey Y. Kikumoto
DATE: 06/23/2016
REVIEWED FOR CODE COMPLIANCE
CALIFORNIA BUILDING CODE 2013

HANGER ATTACHMENT TYPE	STEEL COMPONENT ALLOWABLE VERTICAL LOAD Ta LBS	HANGER ATTACHMENT TYPE	CONCRETE ANCHOR ALLOWABLE VERTICAL LOAD Tac [1,2] LBS	ATR HANGER DIA. INCH	POWER-STUD+ SD2 CONCRETE ANCHOR (ICC ESR-2502) SPECIAL INSPECTION REQ'D						
					DIA. da INCH	MIN EFF. EMBED. hef INCH	MIN HOLE DEPTH ho INCH	MIN BASE TH. ha INCH	MIN EDGE Cmin INCH	MIN SPACING Smin INCH	TORQUE REQ'D FT-LBS
38A TO 38N	2400	38A TO 38M	1940	3/8	3/8	2	2 5/8	4	4 1/2	6	20
50A TO 50P	2620	50A TO 50M	1940	1/2							
63A TO 63P	2620	63A TO 63M	1940	5/8							
75A TO 75P	2620	75A TO 75M	1940	3/4							
88A TO 88P	2620	88A TO 88M	1940	7/8							
38A TO 38N	2400	38A TO 38Q	3920	3/8	1/2	3 1/4	4	6	6	9 3/4	40
50A TO 50P	2620	50A TO 50Q	3920	1/2							
63A TO 63P	2620	63A TO 63Q	3920	5/8							
75A TO 75P	2620	75A TO 75Q	3920	3/4							
88A TO 88P	2620	88A TO 88Q	3920	7/8							

SEE DETAIL M0.00 FOR SECTION NOTES

[1] ALLOWABLE LOADS HAVE BEEN INCREASED BY A FACTOR OF 1.2 FOR LOAD COMBINATIONS INCLUDING OVERSTRENGTH, Ω_0, PER ASCE 7-10 SEC. 12.14.3.2.3.

[2] FOR SLWC SLAB AND BEAM, REDUCE CONCRETE ANCHOR ALLOWABLE VERTICAL LOAD BY MULTIPLYING ALLOWABLE LOAD BY A FACTOR OF 0.68.

MASON WEST, INC.
1601 E. Miraloma Ave. Placentia, CA 92870
TEL (714) 630 - 0701, www.masonwest.com

Jiefu "Jeff" Zhang, SE
California SE No. S5270

PAGE
M1.61.1

HANGER ATTACHMENT
TO CONCRETE SLAB AND BEAM WITH
(2) POWER-STUD+ SD2 CONCRETE ANCHORS

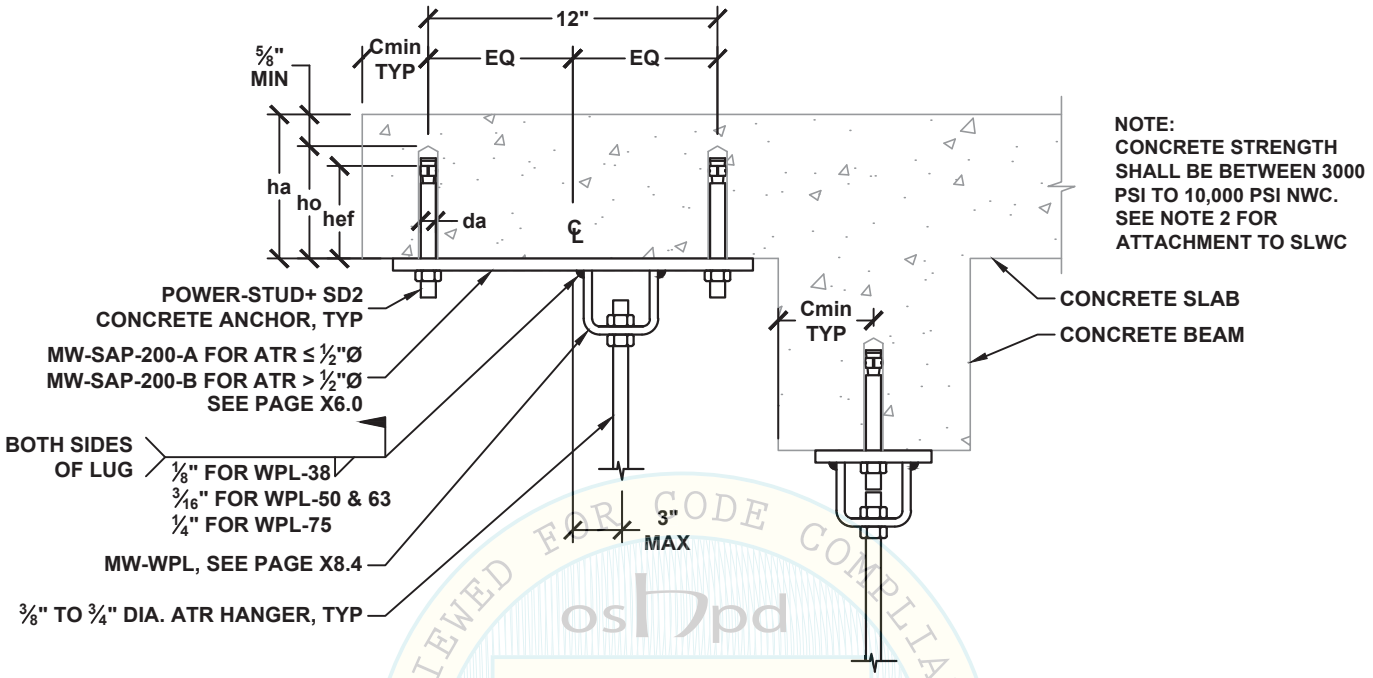

HANGER ATTACHMENT TYPE	STEEL COMPONENT ALLOWABLE VERTICAL LOAD Ta LBS	HANGER ATTACHMENT TYPE	CONCRETE ANCHOR ALLOWABLE VERTICAL LOAD Tac [1,2] LBS	ATR HANGER DIA. INCH	POWER-STUD+ SD2 CONCRETE ANCHOR (ICC ESR-2502) SPECIAL INSPECTION REQ'D						
					DIA. da INCH	MIN EFF. EMBED. hef INCH	MIN HOLE DEPTH ho INCH	MIN BASE TH. ha INCH	MIN EDGE Cmin INCH	MIN SPACING Smin INCH	TORQUE REQ'D FT-LBS
38A TO 38H	720	38A TO 38P	2970	⅜	⅝	3¼	4¼	6	6	9¾	60
50A TO 50K	1080	50A TO 50P	2970	½							
63A TO 63M	1930	63A TO 63P	2970	⅝							
75A TO 75M	1930	75A TO 75P	2970	¾							
38A TO 38H	720	38A TO 38Q	4450	⅜	⅝	4¼	5¼	6½	12	12¾	60
50A TO 50K	1080	50A TO 50Q	4450	½							
63A TO 63M	1930	63A TO 63Q	4450	⅝							
75A TO 75M	1930	75A TO 75Q	4450	¾							

SEE DETAIL M0.00 FOR SECTION NOTES

[1] ALLOWABLE LOADS HAVE BEEN INCREASED BY A FACTOR OF 1.2 FOR LOAD COMBINATIONS INCLUDING OVERSTRENGTH, Ω_0, PER ASCE 7-10 SEC. 12.14.3.2.3.

[2] FOR SLWC SLAB AND BEAM, REDUCE CONCRETE ANCHOR ALLOWABLE VERTICAL LOAD BY MULTIPLYING ALLOWABLE LOAD BY A FACTOR OF 0.68.

OPM 0043-13 Jeffrey Y. Kikumoto DATE 06/23/2016 REVIEWED FOR CODE COMPLIANCE CALIFORNIA BUILDING CODE, 2013

MASON WEST, INC.
1601 E. Miraloma Ave. Placentia, CA 92870
TEL (714) 630 - 0701, www.masonwest.com

Jiefu "Jeff" Zhang, SE
California SE No. S5270

PAGE
M1.62

HANGER ATTACHMENT TO CONCRETE SLAB AND BEAM WITH (4) POWER-STUD+ SD2 CONCRETE ANCHORS

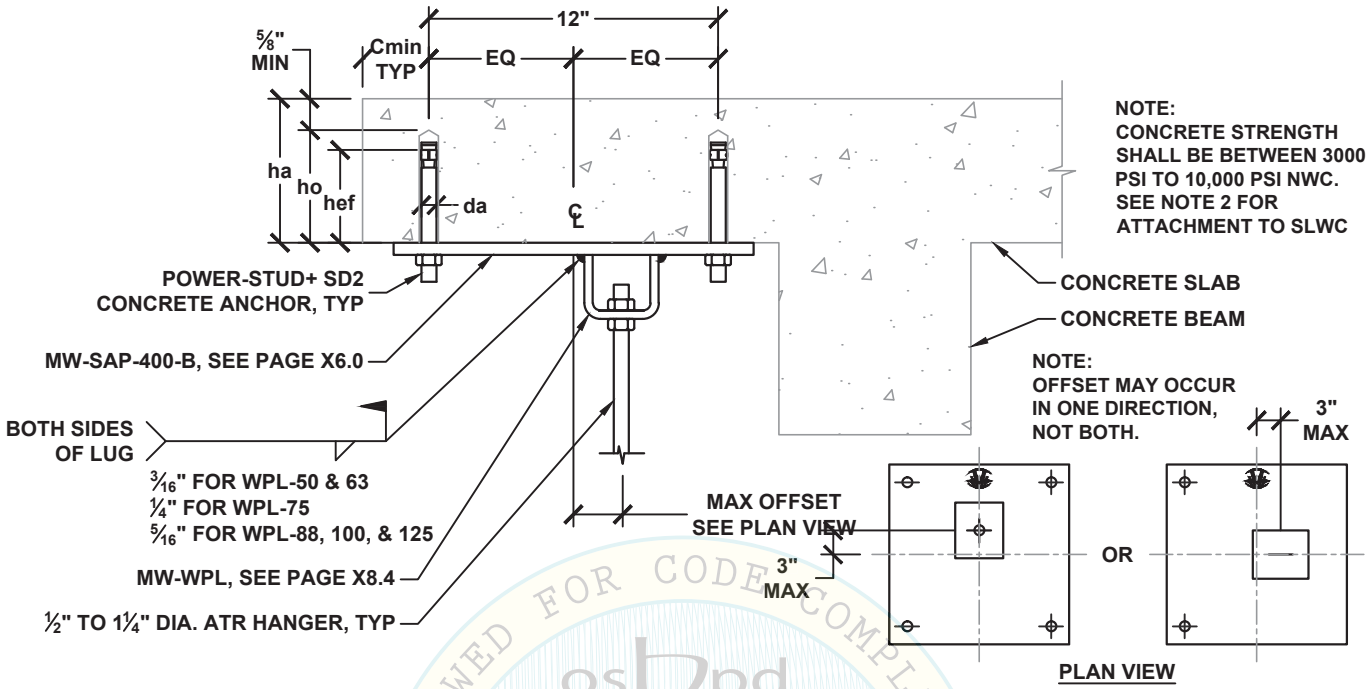

HANGER ATTACHMENT TYPE	STEEL COMPONENT ALLOWABLE VERTICAL LOAD Ta LBS	HANGER ATTACHMENT TYPE	CONCRETE ANCHOR ALLOWABLE VERTICAL LOAD Tac [1,2] LBS	ATR HANGER DIA. INCH	POWER-STUD+ SD2 CONCRETE ANCHOR (ICC ESR-2502) SPECIAL INSPECTION REQ'D						
					DIA. da INCH	MIN EFF. EMBED. hef INCH	MIN HOLE DEPTH ho INCH	MIN BASE TH. ha INCH	MIN EDGE Cmin INCH	MIN SPACING Smin INCH	TORQUE REQ'D FT-LBS
50A TO 50L	1320	50A TO 50R	5950	1/2	5/8	3 1/4	4 1/4	6	6	9 3/4	60
63A TO 63P	2880	63A TO 63R	5950	5/8							
75A TO 75Q	3600	75A TO 75R	5950	3/4							
88A TO 88Q	3600	88A TO 88R	5950	7/8							
100A TO 100Q	3600	100A TO 100R	5950	1							
125A TO 125Q	3600	125A TO 125R	5950	1 1/4							
50A TO 50L	1320	50A TO 50S	8910	1/2	5/8	4 1/4	5 1/4	6 1/2	12	12 3/4	60
63A TO 63P	2880	63A TO 63S	8910	5/8							
75A TO 75Q	3600	75A TO 75S	8910	3/4							
88A TO 88Q	3600	88A TO 88S	8910	7/8							
100A TO 100Q	3600	100A TO 100S	8910	1							
125A TO 125Q	3600	125A TO 125S	8910	1 1/4							

SEE DETAIL M0.00 FOR SECTION NOTES

[1] ALLOWABLE LOADS HAVE BEEN INCREASED BY A FACTOR OF 1.2 FOR LOAD COMBINATIONS INCLUDING OVERSTRENGTH, Ω_0, PER ASCE 7-10 SEC. 12.14.3.2.3.

[2] FOR SLWC SLAB AND BEAM, REDUCE CONCRETE ANCHOR ALLOWABLE VERTICAL LOAD BY MULTIPLYING ALLOWABLE LOAD BY A FACTOR OF 0.68.

OSHPD OPM-0043-13 Reviewed for Code Compliance by Jeffrey Y. Kikumoto DATE: 06/23/2016 OSHPD BUILDING CODE, 2013

MASON WEST, INC.
1601 E. Miraloma Ave. Placentia, CA 92870
TEL (714) 630 - 0701, www.masonwest.com

Jiefu "Jeff" Zhang, SE
California SE No. S5270

PAGE
M1.63

HANGER ATTACHMENT
TO CONCRETE FILLED METAL DECK WITH
(1) MW-PAL-A-MD CONCRETE INSERT AT LOWER FLUTE

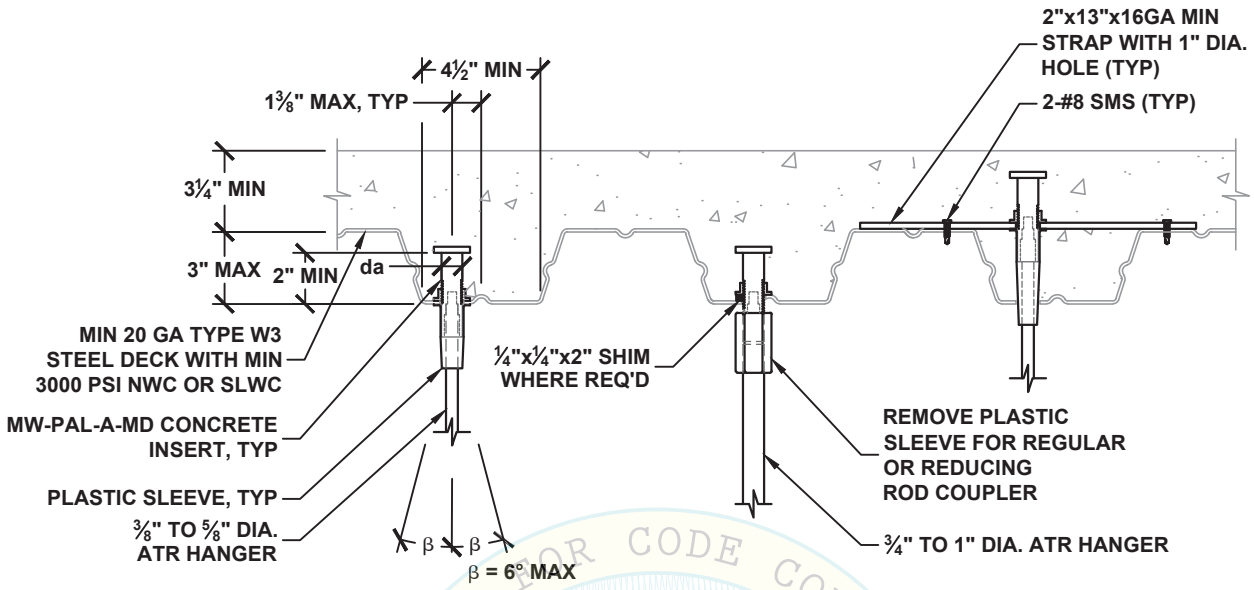

HANGER ATTACHMENT TYPE	ALLOWABLE VERTICAL LOAD Ta [1] LBS	ATR HANGER DIA. INCH	MW-PAL-A-MD CONCRETE INSERT (REFER TO PAGES X5.0.MD & X5.1)		
			DIA. da INCH	MIN SPACING Smin INCH	MIN END DIST. Cmin INCH
38A TO 38J	930	⅜	⅞	6¾	5¼
50A TO 50J	930	½			
63A TO 63J	930	⅝			
75A TO 75J	930	¾			
88A TO 88J	930	⅞			
100A TO 100J	930	1			

SEE DETAIL M0.00 FOR SECTION NOTES

[1] ALLOWABLE LOADS HAVE BEEN INCREASED BY A FACTOR OF 1.2 FOR LOAD COMBINATIONS INCLUDING OVERSTRENGTH, Ω_0, PER ASCE 7-10 SEC. 12.14.3.2.3.

REVIEWED FOR CODE COMPLIANCE
CALIFORNIA BUILDING CODE 2013
OPM-0043-13
Reviewed by: Jeffrey Kikumoto
DATE: 06/23/2016

MASON WEST, INC.
1601 E. Miraloma Ave. Placentia, CA 92870
TEL (714) 630 - 0701, www.masonwest.com

Jiefu "Jeff" Zhang, SE
California SE No. S5270

PAGE
M2.10

HANGER ATTACHMENT
TO CONCRETE FILLED METAL DECK WITH
(1) MW-PAL-A-MD CONCRETE INSERT AT UPPER FLUTE

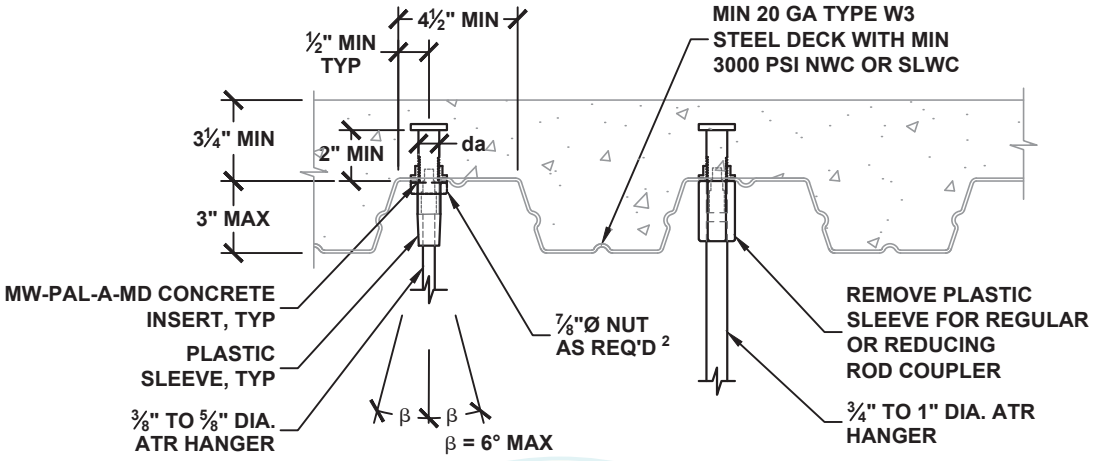

HANGER ATTACHMENT TYPE	ALLOWABLE VERTICAL LOAD Ta [1] LBS	ATR HANGER DIA. INCH	MW-PAL-A-MD CONCRETE INSERT (REFER TO PAGES X5.0.MD & X5.1)		
			DIA. da INCH	MIN SPACING Smin INCH	MIN END DIST. Cmin INCH
38A TO 38N	2030	⅜	⅞	6¾	5¼
50A TO 50P	2590	½			
63A TO 63P	2590	⅝			
75A TO 75P	2590	¾			
88A TO 88P	2590	⅞			
100A TO 100P	2590	1			

SEE DETAIL M0.00 FOR SECTION NOTES

[1] ALLOWABLE LOADS HAVE BEEN INCREASED BY A FACTOR OF 1.2 FOR LOAD COMBINATIONS INCLUDING OVERSTRENGTH, Ω_0, PER ASCE 7-10 SEC. 12.14.3.2.3.

[2] ⅞"Ø NUT IS ONLY REQUIRED WHERE THE MW-PAL-A INSERT IS INSTALLED AT THE UPPER FLUTE AND THERE IS A VERTICAL UPWARD LOAD Nc EXCEEDING 555 LBS IN STRENGTH DESIGN or 390 LBS IN ALLOWABLE STRESS DESIGN. NUT SHALL BE REG., JAM OR SLIP-ON TYPE.

REVIEWED FOR CODE COMPLIANCE
OPM-0043-13
Reviewed by Jeffrey Kikumoto
DATE: 06/23/2016
CALIFORNIA BUILDING CODE 2013

MASON WEST, INC.
1601 E. Miraloma Ave. Placentia, CA 92870
TEL (714) 630 - 0701, www.masonwest.com

Jiefu "Jeff" Zhang, SE
California SE No. S5270

PAGE
M2.11

HANGER ATTACHMENT
TO CONCRETE FILLED METAL DECK
WITH (2) MW-PAL-A-MD CONCRETE INSERT AT LOWER FLUTE

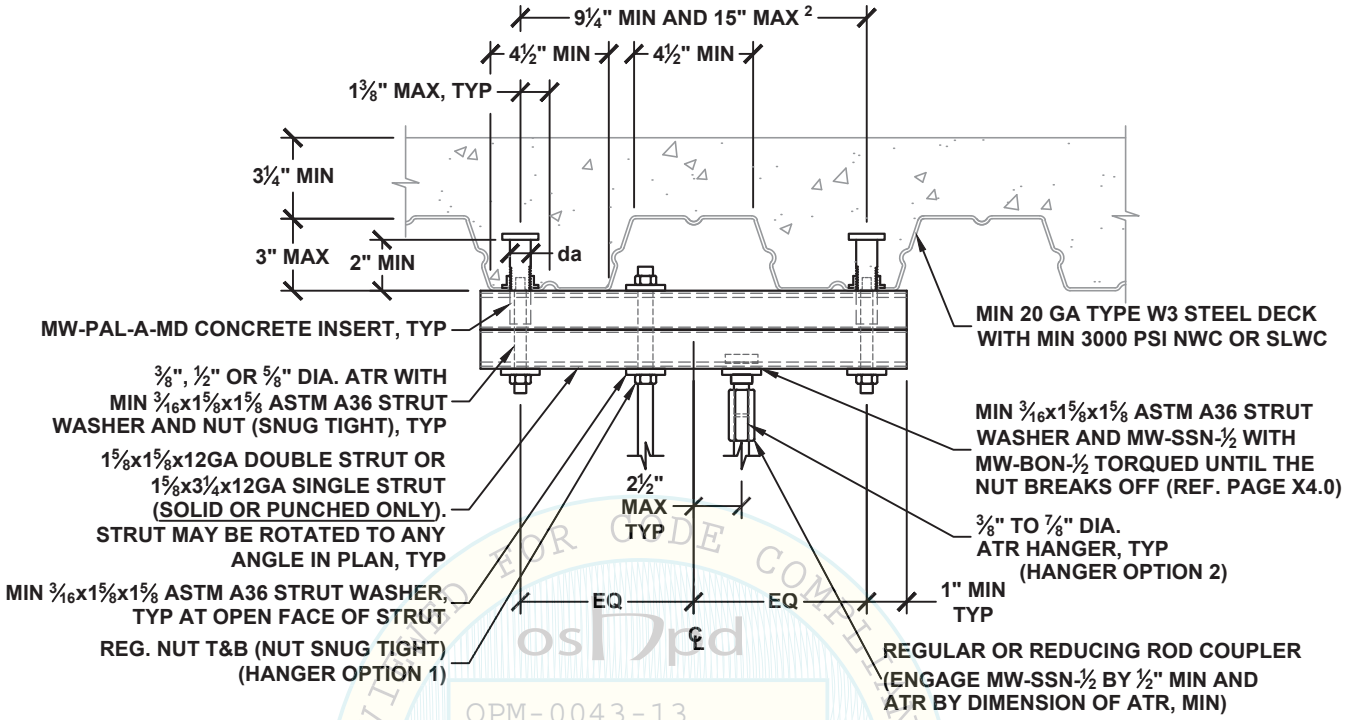

osDpd
OPM-0043-13
BY: Jeffrey Y. Kikumoto
DATE: 06/23/2016
REVIEWED FOR CODE COMPLIANCE
CALIFORNIA BUILDING CODE, 2013

HANGER ATTACHMENT TYPE	STEEL COMPONENT ALLOWABLE VERTICAL LOAD Ta LBS	HANGER ATTACHMENT TYPE	CONCRETE INSERT ALLOWABLE VERTICAL LOAD Tac [1] LBS	ATR HANGER DIA. INCH	MW-PAL-A-MD CONCRETE INSERT (REFER TO PAGES X5.0.MD & X5.1)		
					DIA. da INCH	MIN SPACING Smin INCH	MIN END DIST. Cmin INCH
38A TO 38N	2400	38A TO 38K	1210	⅜	⅞	6¾	5¼
50A TO 50P	2620	50A TO 50K	1210	½			
63A TO 63P	2620	63A TO 63K	1210	⅝			
75A TO 75P	2620	75A TO 75K	1210	¾			
88A TO 88P	2620	88A TO 88K	1210	⅞			

SEE DETAIL M0.00 FOR SECTION NOTES

[1] ALLOWABLE LOADS HAVE BEEN INCREASED BY A FACTOR OF 1.2 FOR LOAD COMBINATIONS INCLUDING OVERSTRENGTH, Ω_0, PER ASCE 7-10 SEC. 12.14.3.2.3.

[2] WHEN THE BOLT CENTERLINE DISTANCE EXCEEDS 14¾", THE STRUT MUST BE ROTATED TO COMPLY TO THE DETAIL.

MASON WEST, INC.
1601 E. Miraloma Ave. Placentia, CA 92870
TEL (714) 630 - 0701, www.masonwest.com

Jiefu "Jeff" Zhang, SE
California SE No. S5270

HANGER ATTACHMENT
TO CONCRETE FILLED METAL DECK
WITH (2) MW-PAL-A-MD CONCRETE INSERT AT LOWER FLUTE

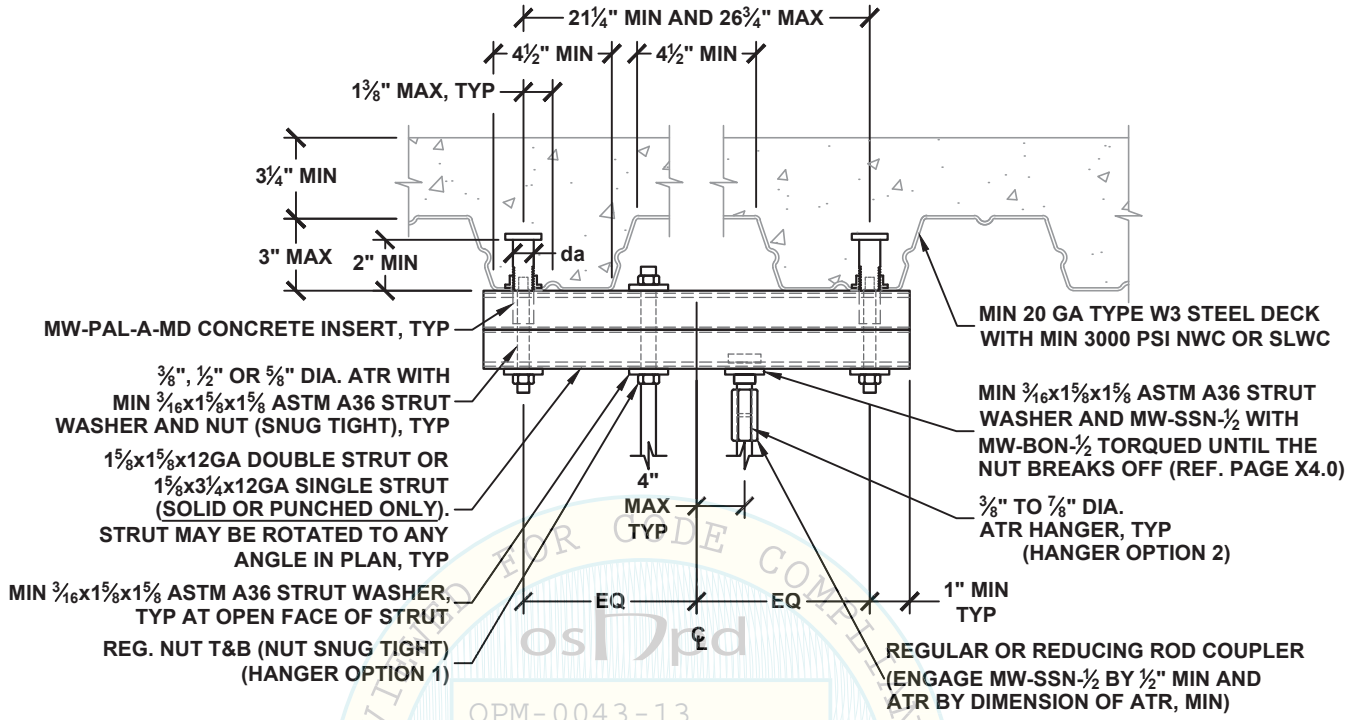

osDpd
OPM-0043-13
BY: Jeffrey Y. Kikumoto
DATE: 06/23/2016
REVIEWED FOR CODE COMPLIANCE
CALIFORNIA BUILDING CODE, 2013

HANGER ATTACHMENT TYPE	STEEL COMPONENT ALLOWABLE VERTICAL LOAD Ta LBS	HANGER ATTACHMENT TYPE	CONCRETE INSERT ALLOWABLE VERTICAL LOAD Tac [1] LBS	ATR HANGER DIA. INCH	MW-PAL-A-MD CONCRETE INSERT (REFER TO PAGES X5.0.MD & X5.1)		
					DIA. da INCH	MIN SPACING Smin INCH	MIN END DIST. Cmin INCH
38A TO 38M	1810	38A TO 38L	1350	⅜	⅞	6¾	5¼
50A TO 50M	1810	50A TO 50L	1350	½			
63A TO 63M	1810	63A TO 63L	1350	⅝			
75A TO 75M	1810	75A TO 75L	1350	¾			
88A TO 88M	1810	88A TO 88L	1350	⅞			

SEE DETAIL M0.00 FOR SECTION NOTES

[1] ALLOWABLE LOADS HAVE BEEN INCREASED BY A FACTOR OF 1.2 FOR LOAD COMBINATIONS INCLUDING OVERSTRENGTH, Ω_0, PER ASCE 7-10 SEC. 12.14.3.2.3.

MASON WEST, INC.
1601 E. Miraloma Ave. Placentia, CA 92870
TEL (714) 630 - 0701, www.masonwest.com

Jiefu "Jeff" Zhang, SE
California SE No. S5270

PAGE
M2.12.1

HANGER ATTACHMENT
TO CONCRETE FILLED METAL DECK
WITH (2) MW-PAL-A-MD CONCRETE INSERT AT LOWER FLUTE

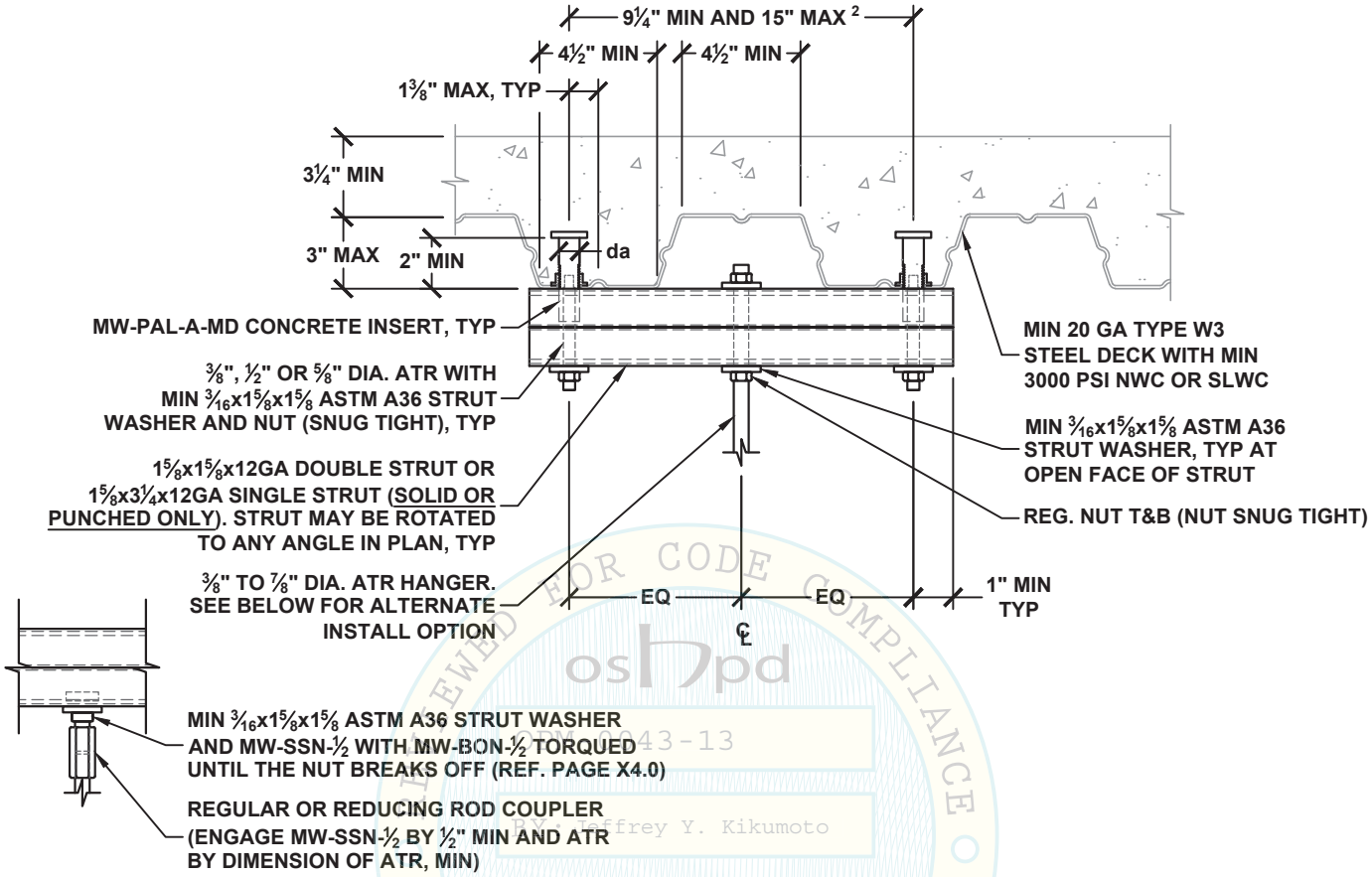

ALTERNATE HANGER INSTALL

HANGER ATTACHMENT TYPE	STEEL COMPONENT ALLOWABLE VERTICAL LOAD Ta LBS	HANGER ATTACHMENT TYPE	CONCRETE INSERT ALLOWABLE VERTICAL LOAD Tac [1] LBS	ATR HANGER DIA. INCH	MW-PAL-A-MD CONCRETE INSERT (REFER TO PAGES X5.0.MD & X5.1)		
					DIA. da INCH	MIN SPACING Smin INCH	MIN END DIST. Cmin INCH
38A TO 38N	2400	38A TO 38M	1860	⅜	⅞	6¾	5¼
50A TO 50P	2620	50A TO 50M	1860	½			
63A TO 63P	2620	63A TO 63M	1860	⅝			
75A TO 75P	2620	75A TO 75M	1860	¾			
88A TO 88P	2620	88A TO 88M	1860	⅞			

SEE DETAIL M0.00 FOR SECTION NOTES

[1] ALLOWABLE LOADS HAVE BEEN INCREASED BY A FACTOR OF 1.2 FOR LOAD COMBINATIONS INCLUDING OVERSTRENGTH, Ω_0, PER ASCE 7-10 SEC. 12.14.3.2.3.

[2] WHEN THE BOLT CENTERLINE DISTANCE EXCEEDS 14¾", THE STRUT MUST BE ROTATED TO COMPLY TO THE DETAIL.

REVIEWED FOR CODE COMPLIANCE
OSHPD
OPM-0043-13
By: Jeffrey Y. Kikumoto
DATE: 06/23/2016
CALIFORNIA BUILDING CODE 2013

MASON WEST, INC.
1601 E. Miraloma Ave. Placentia, CA 92870
TEL (714) 630 - 0701, www.masonwest.com

Jiefu "Jeff" Zhang, SE
California SE No. S5270

PAGE
M2.12.2

HANGER ATTACHMENT
TO CONCRETE FILLED METAL DECK
WITH (2) MW-PAL-A-MD CONCRETE INSERT AT LOWER FLUTE

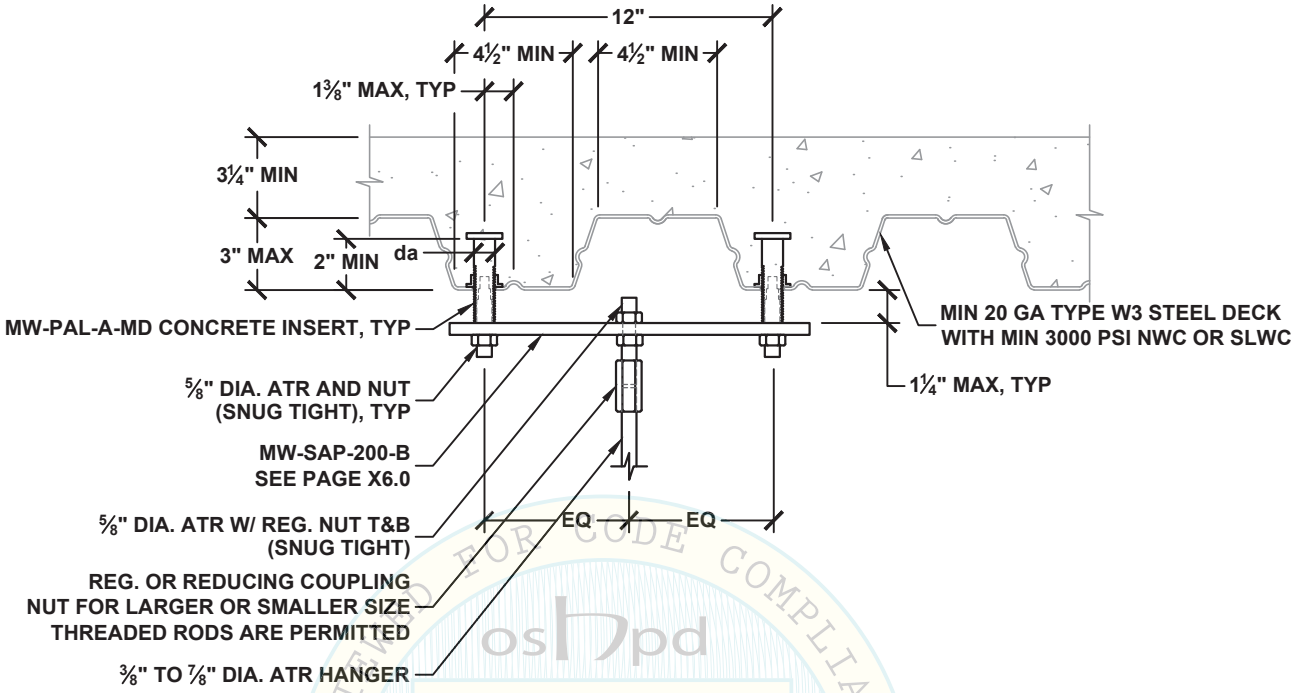

REVIEWED FOR CODE COMPLIANCE
CALIFORNIA BUILDING CODE, 2013
oshpd
OPM-0043-13
BY: Jeffrey Y. Kikumoto
DATE: 06/23/2016

HANGER ATTACHMENT TYPE	STEEL COMPONENT ALLOWABLE VERTICAL LOAD Ta LBS	HANGER ATTACHMENT TYPE	CONCRETE INSERT ALLOWABLE VERTICAL LOAD Tac [1] LBS	ATR HANGER DIA. INCH	MW-PAL-A-MD CONCRETE INSERT (REFER TO PAGES X5.0.MD & X5.1)		
					DIA. da INCH	MIN SPACING Smin INCH	MIN END DIST. Cmin INCH
38A TO 38M	1930	38A TO 38M	1860	⅜	⅞	6¾	5¼
50A TO 50M	1930	50A TO 50M	1860	½			
63A TO 63M	1930	63A TO 63M	1860	⅝			
75A TO 75M	1930	75A TO 75M	1860	¾			
88A TO 88M	1930	88A TO 88M	1860	⅞			

SEE DETAIL M0.00 FOR SECTION NOTES

[1] ALLOWABLE LOADS HAVE BEEN INCREASED BY A FACTOR OF 1.2 FOR LOAD COMBINATIONS INCLUDING OVERSTRENGTH, Ω_0, PER ASCE 7-10 SEC. 12.14.3.2.3.

MASON WEST, INC.
1601 E. Miraloma Ave. Placentia, CA 92870
TEL (714) 630 - 0701, www.masonwest.com

Jiefu "Jeff" Zhang, SE
California SE No. S5270

HANGER ATTACHMENT
TO CONCRETE FILLED METAL DECK
WITH (4) MW-PAL-A-MD CONCRETE INSERT AT LOWER FLUTE

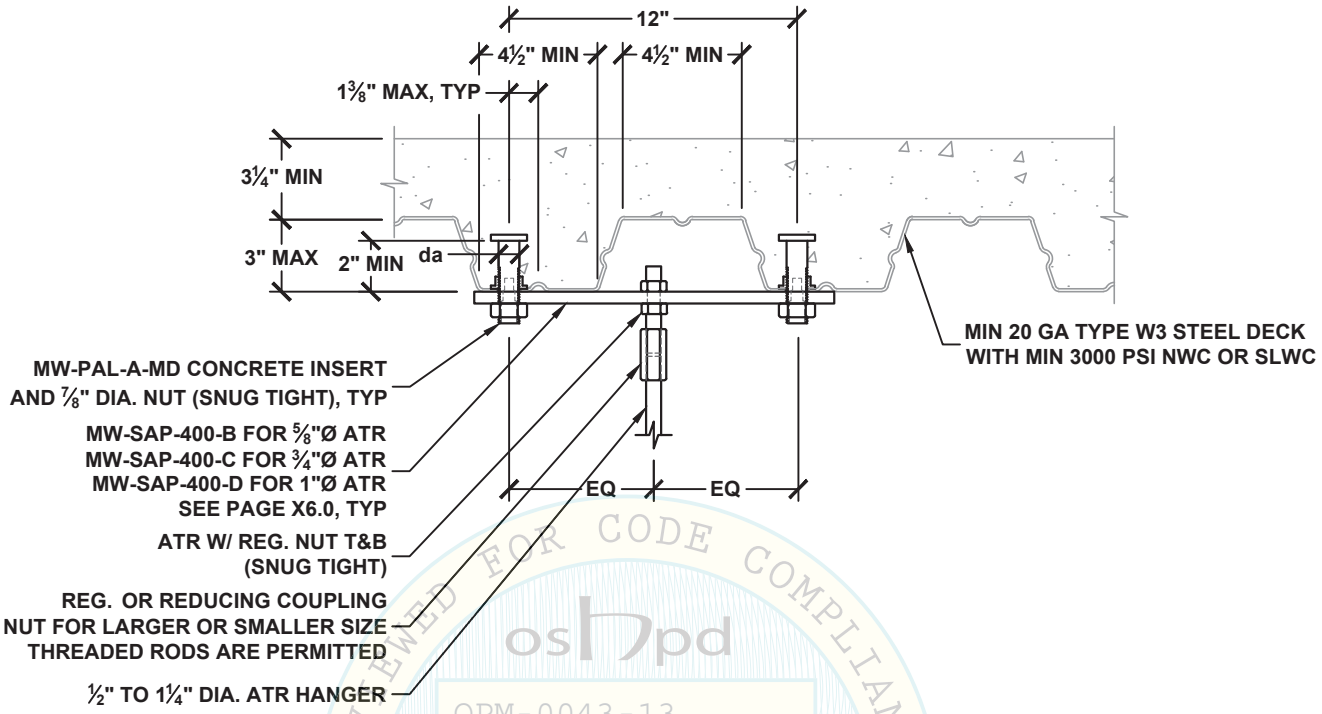

HANGER ATTACHMENT TYPE	STEEL COMPONENT ALLOWABLE VERTICAL LOAD Ta LBS	HANGER ATTACHMENT TYPE	CONCRETE INSERT ALLOWABLE VERTICAL LOAD Tac [1] LBS	ATR HANGER DIA. INCH	MW-PAL-A-MD CONCRETE INSERT (REFER TO PAGES X5.0.MD & X5.1)		
					DIA. da INCH	MIN SPACING Smin INCH	MIN END DIST. Cmin INCH
50A TO 50Q	3600	50A TO 50Q	3720	½	⅞	6¾	5¼
63A TO 63Q	3600	63A TO 63Q	3720	⅝			
75A TO 75Q	3500	75A TO 75Q	3720	¾			
88A TO 88Q	3500	88A TO 88Q	3720	⅞			
100A TO 100Q	3500	100A TO 100Q	3720	1			
125A TO 125Q	3500	125A TO 125Q	3720	1¼			

SEE DETAIL M0.00 FOR SECTION NOTES

[1] ALLOWABLE LOADS HAVE BEEN INCREASED BY A FACTOR OF 1.2 FOR LOAD COMBINATIONS INCLUDING OVERSTRENGTH, Ω_0, PER ASCE 7-10 SEC. 12.14.3.2.3.

REVIEWED FOR CODE COMPLIANCE
OSHPD
OPM-0043-13
BY: Jeffrey Y. Kikumoto
DATE: 06/23/2016
CALIFORNIA BUILDING CODE, 2013

MASON WEST, INC.
1601 E. Miraloma Ave. Placentia, CA 92870
TEL (714) 630 - 0701, www.masonwest.com

Jiefu "Jeff" Zhang, SE
California SE No. S5270

PAGE
M2.14

HANGER ATTACHMENT
TO CONCRETE FILLED METAL DECK
WITH (1) HILTI KB-TZ CONCRETE ANCHOR

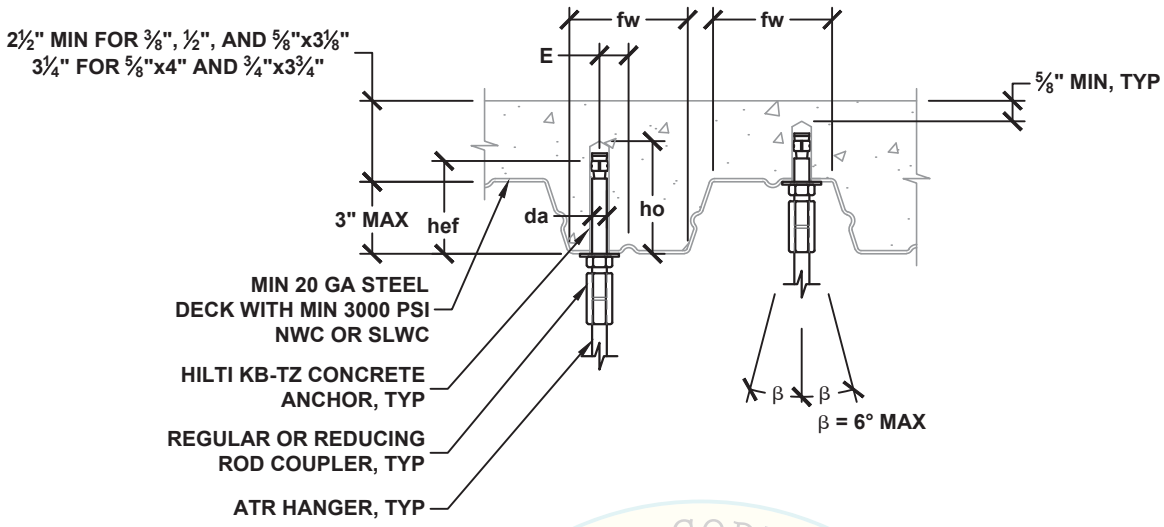

MIN FLUTE WIDTH fw INCH	MAX OFFSET E INCH
3⅞	15/16
4½	1

HANGER ATTACHMENT TYPE	ALLOWABLE VERTICAL LOAD Ta [1] LBS	MIN ATR HANGER DIA. INCH	HILTI KB-TZ CONCRETE ANCHOR (ICC ESR-1917) SPECIAL INSPECTION REQ'D					
			DIA. da INCH	MIN EFF. EMBED hef INCH	MIN HOLE DEPTH ho INCH	MIN SPACING Smin INCH	MIN END DIST. Cmin INCH	TORQUE REQ'D FT-LBS
38A TO 38G	580	⅜	⅜	2	2⅝	MAX OF: 3*hef OR 1.5*FLUTE WIDTH	3⅜	25
38A TO38G	580	⅜	½	2	2⅝		3⅜	40
50A TO 50G	580	½						
63A TO 63G	580	⅝						
38A TO 38K	1070	⅜	½	3¼	4		4⅞	40
50A TO 50K	1070	½						
63A TO 63K	1070	⅝						
50A TO 50H	820	½	⅝	3⅛	3¾		4 11/16	60
63A TO 63H	820	⅝						
75A TO 75H	820	¾						
50A TO 50L	1590	½	⅝	4	4¾		6	60
63A TO 63L	1590	⅝						
75A TO 75L	1590	¾						
63A TO 63L	1300	⅝	¾	3¾	4½		5⅝	110
75A TO 75L	1300	¾						
88A TO 88L	1300	⅞						

SEE DETAIL M0.00 FOR SECTION NOTES

[1] ALLOWABLE LOADS HAVE BEEN INCREASED BY A FACTOR OF 1.2 FOR LOAD COMBINATIONS INCLUDING OVERSTRENGTH, Ω_0, PER ASCE 7-10 SEC. 12.14.3.2.3.

REVIEWED FOR CODE COMPLIANCE
OPM-0043-13
By Jeffrey Kikumoto
DATE: 06/23/2016
CALIFORNIA BUILDING CODE, 2013

MASON WEST, INC.
1601 E. Miraloma Ave. Placentia, CA 92870
TEL (714) 630 - 0701, www.masonwest.com

Jiefu "Jeff" Zhang, SE
California SE No. S5270

HANGER ATTACHMENT TO CONCRETE FILLED METAL DECK WITH (2) HILTI KB-TZ CONCRETE ANCHORS

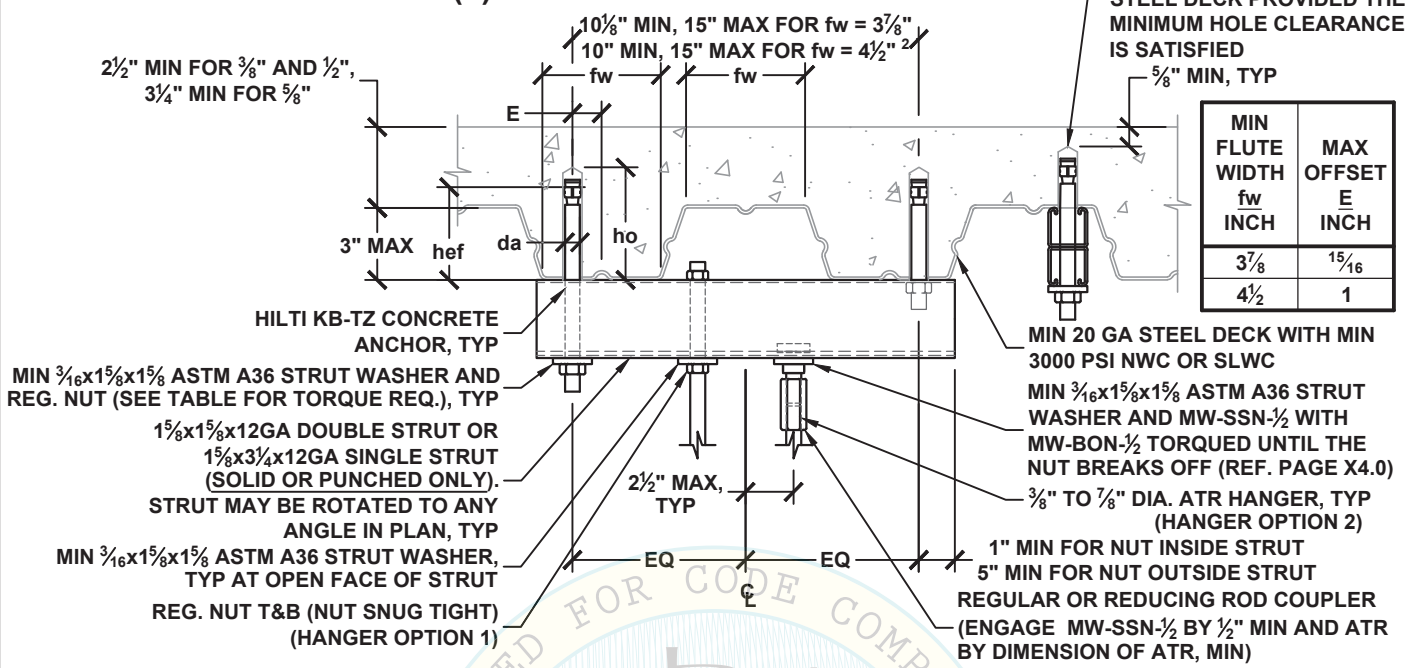

MIN FLUTE WIDTH fw INCH	MAX OFFSET E INCH
3⅞	15/16
4½	1

HANGER ATTACHMENT TYPE	STEEL COMPONENT ALLOWABLE VERTICAL LOAD Ta LBS	HANGER ATTACHMENT TYPE	CONCRETE ANCHOR ALLOWABLE VERTICAL LOAD Tac [1] LBS	ATR HANGER DIA. INCH	HILTI KB-TZ CONCRETE ANCHOR (ICC ESR-1917) SPECIAL INSPECTION REQ'D					
					DIA. da INCH	MIN EFF. EMBED. hef INCH	MIN HOLE DEPTH ho INCH	MIN SPACING Smin INCH	MIN END DIST. Cmin INCH	TORQUE REQ'D FT-LBS
38A TO 38N	2400	38A TO 38H	770	⅜	⅜	2	2⅝	MAX OF: 3*hef OR 1.5*FLUTE WIDTH	3⅜	25
50A TO 50P	2620	50A TO 50H	770	½						
63A TO 63P	2620	63A TO 63H	770	⅝						
75A TO 75P	2620	75A TO 75H	770	¾						
88A TO 88P	2620	88A TO 88H	770	⅞						
38A TO 38N	2400	38A TO 38L	1430	⅜	½	3¼	4	MAX OF: 3*hef OR 1.5*FLUTE WIDTH	4⅞	40
50A TO 50P	2620	50A TO 50L	1430	½						
63A TO 63P	2620	63A TO 63L	1430	⅝						
75A TO 75P	2620	75A TO 75L	1430	¾						
88A TO 88P	2620	88A TO 88L	1430	⅞						
38A TO 38N	2400	38A TO 38N	2120	⅜	⅝	4	4¾	MAX OF: 3*hef OR 1.5*FLUTE WIDTH	6	60
50A TO 50P	2620	50A TO 50N	2120	½						
63A TO 63P	2620	63A TO 63N	2120	⅝						
75A TO 75P	2620	75A TO 75N	2120	¾						
88A TO 88P	2620	88A TO 88N	2120	⅞						

SEE DETAIL M0.00 FOR SECTION NOTES

[1] ALLOWABLE LOADS HAVE BEEN INCREASED BY A FACTOR OF 1.2 FOR LOAD COMBINATIONS INCLUDING OVERSTRENGTH, Ω_0, PER ASCE 7-10 SEC. 12.14.3.2.3.

[2] WHEN THE BOLT CENTERLINE DISTANCE EXCEEDS 13⅞" FOR fw = 3⅞" OR 14" FOR fw = 4½", THE STRUT MUST BE ROTATED TO COMPLY TO THE DETAIL.

MASON WEST, INC.
1601 E. Miraloma Ave. Placentia, CA 92870
TEL (714) 630 - 0701, www.masonwest.com

Jiefu "Jeff" Zhang, SE
California SE No. S5270

PAGE **M2.21**

OSHPD OPM-0043-13 REVIEWED FOR CODE COMPLIANCE BY: Jeffrey Kikumoto DATE: 06/23/2016 CALIFORNIA BUILDING CODE, 2013

HANGER ATTACHMENT
TO CONCRETE FILLED METAL DECK
WITH (2) HILTI KB-TZ CONCRETE ANCHORS

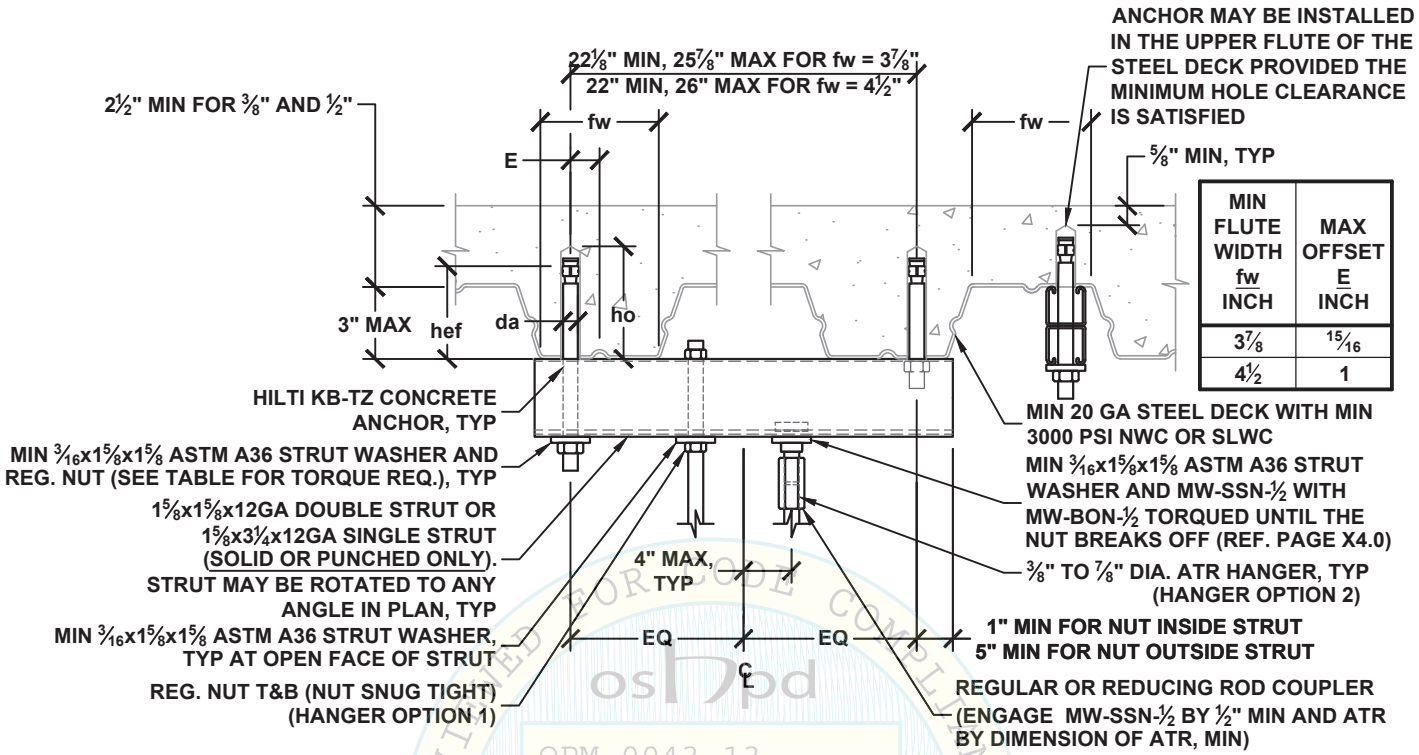

MIN FLUTE WIDTH fw INCH	MAX OFFSET E INCH
3⅞	15/16
4½	1

HANGER ATTACHMENT TYPE	STEEL COMPONENT ALLOWABLE VERTICAL LOAD Ta LBS	HANGER ATTACHMENT TYPE	CONCRETE ANCHOR ALLOWABLE VERTICAL LOAD Tac [1] LBS	ATR HANGER DIA. INCH	HILTI KB-TZ CONCRETE ANCHOR (ICC ESR-1917) SPECIAL INSPECTION REQ'D					
					DIA. da INCH	MIN EFF. EMBED. hef INCH	MIN HOLE DEPTH ho INCH	MIN SPACING Smin INCH	MIN END DIST. Cmin INCH	TORQUE REQ'D FT-LBS
38A TO 38M	1860	38A TO 38J	850	⅜	⅜	2	2⅝	MAX OF: 3*hef OR 1.5*FLUTE WIDTH	3⅜	25
50A TO 50M	1860	50A TO 50J	850	½						
63A TO 63M	1860	63A TO 63J	850	⅝						
75A TO 75M	1860	75A TO 75J	850	¾						
88A TO 88M	1860	88A TO 88J	850	⅞						
38A TO 38M	1860	38A TO 38L	1570	⅜	½	3¼	4	MAX OF: 3*hef OR 1.5*FLUTE WIDTH	4⅞	40
50A TO 50M	1860	50A TO 50L	1570	½						
63A TO 63M	1860	63A TO 63L	1570	⅝						
75A TO 75M	1860	75A TO 75L	1570	¾						
88A TO 88M	1860	88A TO 88L	1570	⅞						

SEE DETAIL M0.00 FOR SECTION NOTES

[1] ALLOWABLE LOADS HAVE BEEN INCREASED BY A FACTOR OF 1.2 FOR LOAD COMBINATIONS INCLUDING OVERSTRENGTH, Ω_0, PER ASCE 7-10 SEC. 12.14.3.2.3.

OSHPD
OPM-0043-13
REVIEWED FOR CODE COMPLIANCE BY Jeffrey Y. Kikumoto
DATE 6/23/2016
CALIFORNIA BUILDING CODE, 2013

MASON WEST, INC.
1601 E. Miraloma Ave. Placentia, CA 92870
TEL (714) 630 - 0701, www.masonwest.com

Jiefu "Jeff" Zhang, SE
California SE No. S5270

PAGE
M2.21.1

HANGER ATTACHMENT TO CONCRETE FILLED METAL DECK WITH (2) HILTI KB-TZ CONCRETE ANCHORS

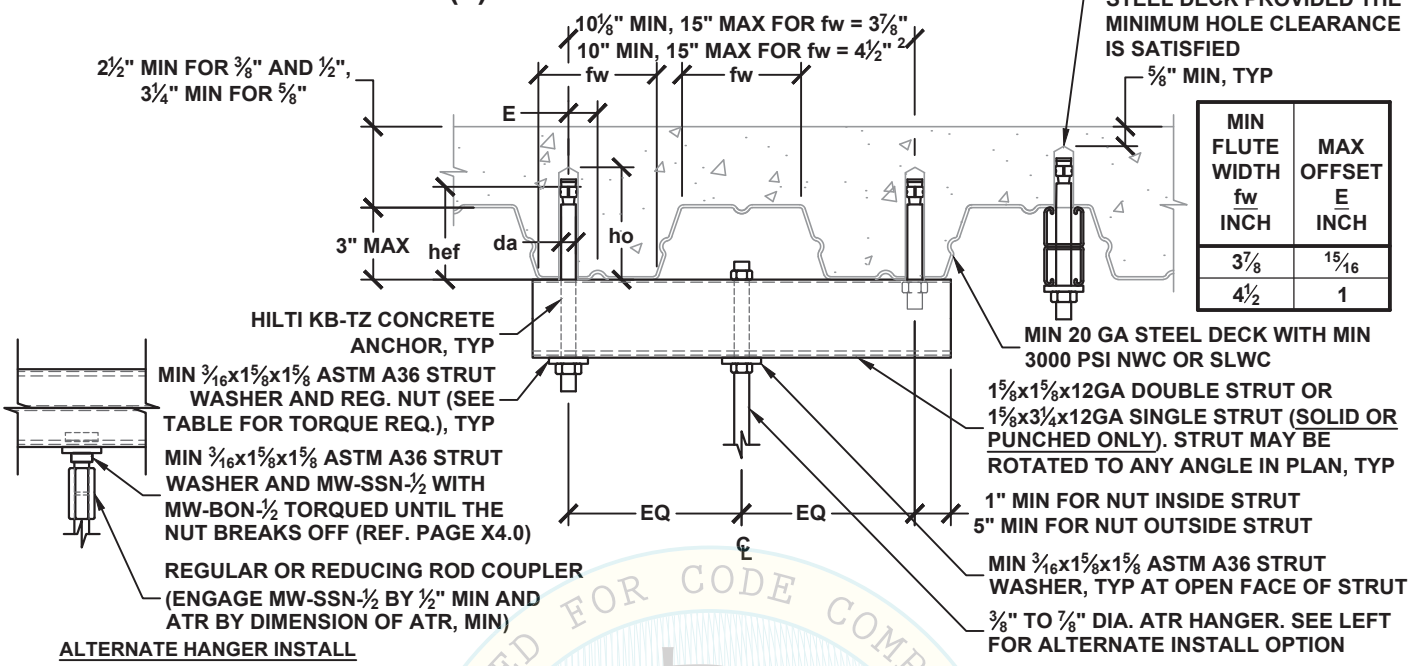

MIN FLUTE WIDTH fw INCH	MAX OFFSET E INCH
3⅞	15/16
4½	1

ALTERNATE HANGER INSTALL

HANGER ATTACHMENT TYPE	STEEL COMPONENT ALLOWABLE VERTICAL LOAD Ta LBS	HANGER ATTACHMENT TYPE	CONCRETE ANCHOR ALLOWABLE VERTICAL LOAD Tac [1] LBS	ATR HANGER DIA. INCH	HILTI KB-TZ CONCRETE ANCHOR (ICC ESR-1917) SPECIAL INSPECTION REQ'D					
					DIA. da INCH	MIN EFF. EMBED. hef INCH	MIN HOLE DEPTH ho INCH	MIN SPACING Smin INCH	MIN END DIST. Cmin INCH	TORQUE REQ'D FT-LBS
38A TO 38N	2400	38A TO 38K	1160	⅜	⅜	2	2⅝	MAX OF: 3*hef OR 1.5*FLUTE WIDTH	3⅜	25
50A TO 50P	2620	50A TO 50K	1160	½						
63A TO 63P	2620	63A TO 63K	1160	⅝						
75A TO 75P	2620	75A TO 75K	1160	¾						
88A TO 88P	2620	88A TO 88K	1160	⅞						
38A TO 38N	2400	38A TO 38N	2140	⅜	½	3¼	4	MAX OF: 3*hef OR 1.5*FLUTE WIDTH	4⅞	40
50A TO 50P	2620	50A TO 50N	2140	½						
63A TO 63P	2620	63A TO 63N	2140	⅝						
75A TO 75P	2620	75A TO 75N	2140	¾						
88A TO 88P	2620	88A TO 88N	2140	⅞						
38A TO 38N	2400	38A TO 38P	3180	⅜	⅝	4	4¾	MAX OF: 3*hef OR 1.5*FLUTE WIDTH	6	60
50A TO 50P	2620	50A TO 50P	3180	½						
63A TO 63P	2620	63A TO 63P	3180	⅝						
75A TO 75P	2620	75A TO 75P	3180	¾						
88A TO 88P	2620	88A TO 88P	3180	⅞						

SEE DETAIL M0.00 FOR SECTION NOTES

[1] ALLOWABLE LOADS HAVE BEEN INCREASED BY A FACTOR OF 1.2 FOR LOAD COMBINATIONS INCLUDING OVERSTRENGTH, Ω_0, PER ASCE 7-10 SEC. 12.14.3.2.3.

[2] WHEN THE BOLT CENTERLINE DISTANCE EXCEEDS 13⅞" FOR fw = 3⅞" OR 14" FOR fw = 4½", THE STRUT MUST BE ROTATED TO COMPLY TO THE DETAIL.

MASON WEST, INC.
1601 E. Miraloma Ave. Placentia, CA 92870
TEL (714) 630 - 0701, www.masonwest.com

Jiefu "Jeff" Zhang, SE
California SE No. S5270

PAGE
M2.21.2

OSHPD OPM-0043-13 REVIEWED BY: Jeffrey Kikumoto DATE: 06/23/2016 REVIEWED FOR CODE COMPLIANCE CALIFORNIA BUILDING CODE, 2013

HANGER ATTACHMENT
TO CONCRETE FILLED METAL DECK
WITH (1) HILTI KB-TZ CONCRETE ANCHOR

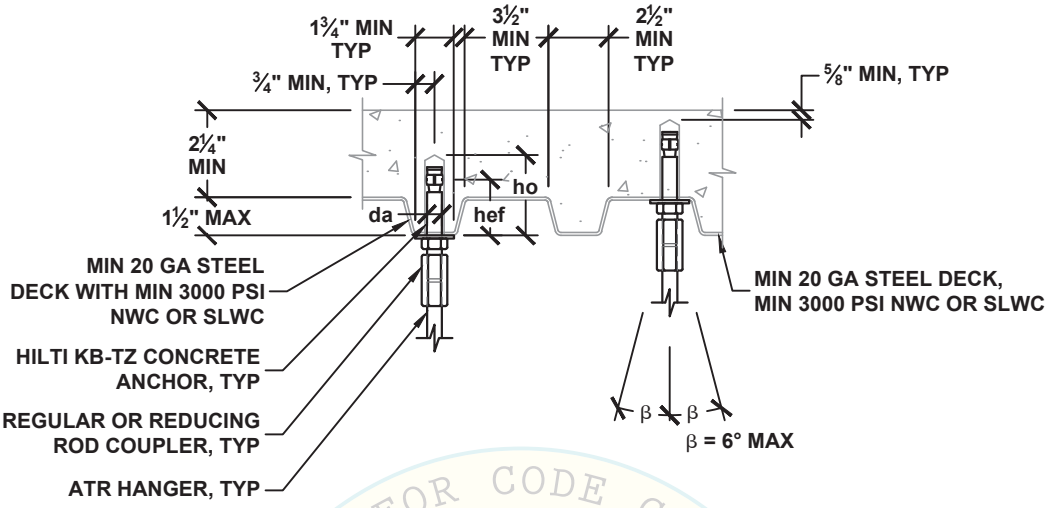

HANGER ATTACHMENT TYPE	ALLOWABLE VERTICAL LOAD Ta [1] LBS	MIN ATR HANGER DIA. INCH	HILTI KB-TZ CONCRETE ANCHOR (ICC ESR-1917) SPECIAL INSPECTION REQ'D					
			DIA. da INCH	MIN EFF. EMBED hef INCH	MIN HOLE DEPTH ho INCH	MIN SPACING Smin INCH	MIN END DIST. Cmin INCH	TORQUE REQ'D FT-LBS
38A TO 38G	680	⅜	⅜	2	2⅝	6	3	25
38A TO 38F	540	⅜	½	2	2⅝	6	3	40
50A TO 50F	540	½						
63A TO 63F	540	⅝						
38A TO 38K	1230	⅜	½	3¼	4	9¾	4⅞	40
50A TO 50K	1230	½						
63A TO 63K	1230	⅝						
50A TO 50K	1180	½	⅝	3⅛	3¾	9⅜	4 11/16	60
63A TO 63K	1180	⅝						
75A TO 75K	1180	¾						

SEE DETAIL M0.00 FOR SECTION NOTES

[1] ALLOWABLE LOADS HAVE BEEN INCREASED BY A FACTOR OF 1.2 FOR LOAD COMBINATIONS INCLUDING OVERSTRENGTH, Ω_0, PER ASCE 7-10 SEC. 12.14.3.2.3.

REVIEWED FOR CODE COMPLIANCE
OSHPD
OPM-0043-13
By: Jeffrey Y. Kikumoto
Date: 06/23/2016
CALIFORNIA BUILDING CODE, 2013

MASON WEST, INC.
1601 E. Miraloma Ave. Placentia, CA 92870
TEL (714) 630 - 0701, www.masonwest.com

Jiefu "Jeff" Zhang, SE
California SE No. S5270

PAGE
M2.23

HANGER ATTACHMENT
TO CONCRETE FILLED METAL DECK
WITH (2) HILTI KB-TZ CONCRETE ANCHORS

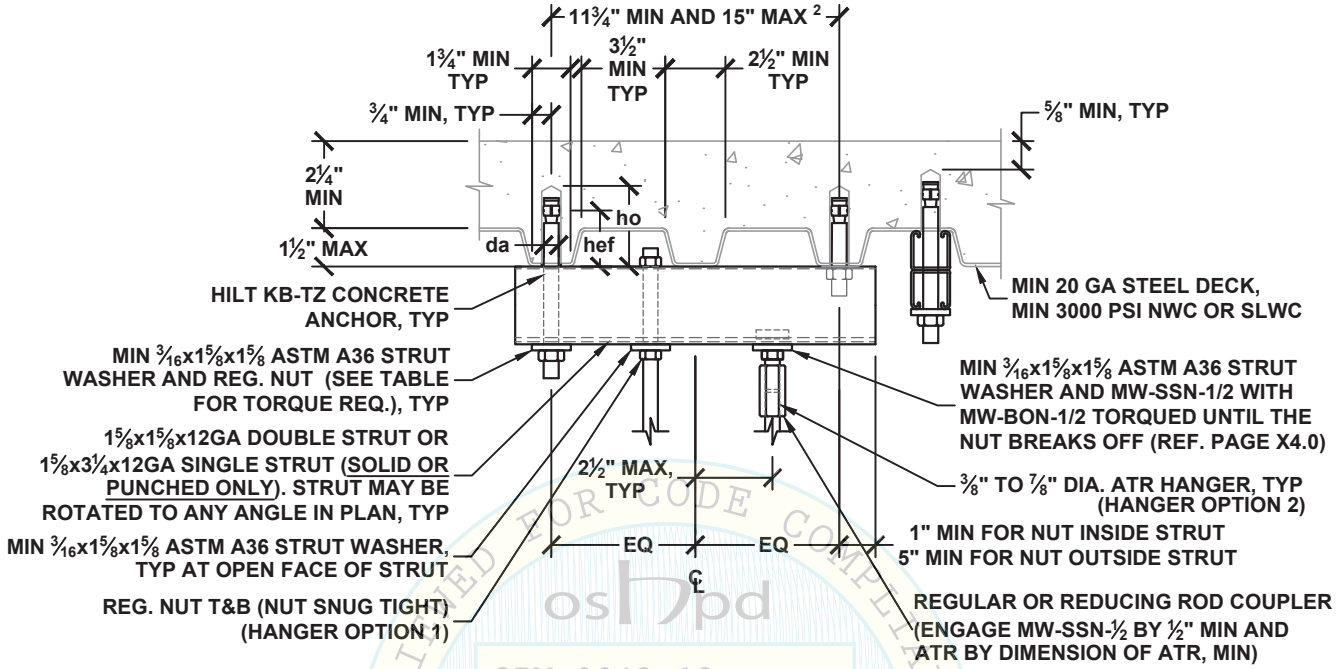

HANGER ATTACHMENT TYPE	STEEL COMPONENT ALLOWABLE VERTICAL LOAD Ta LBS	HANGER ATTACHMENT TYPE	CONCRETE ANCHOR ALLOWABLE VERTICAL LOAD Tac [1] LBS	ATR HANGER DIA. INCH	HILTI KB-TZ CONCRETE ANCHOR (ICC ESR-1917) SPECIAL INSPECTION REQ'D					
					DIA. da INCH	MIN EFF. EMBED. hef INCH	MIN HOLE DEPTH ho INCH	MIN SPACING Smin INCH	MIN END DIST. Cmin INCH	TORQUE REQ'D FT-LBS
38A TO 38N	2400	38A TO 38J	960	⅜	⅜	2	2⅝	6	3	25
50A TO 50P	2620	50A TO 50J	960	½						
63A TO 63P	2620	63A TO 63J	960	⅝						
75A TO 75P	2620	75A TO 75J	960	¾						
88A TO 88P	2620	88A TO 88J	960	⅞						
38A TO 38N	2400	38A TO 38M	1740	⅜	½	3¼	4	9¾	4⅞	40
50A TO 50P	2620	50A TO 50M	1740	½						
63A TO 63P	2620	63A TO 63M	1740	⅝						
75A TO 75P	2620	75A TO 75M	1740	¾						
88A TO 88P	2620	88A TO 88M	1740	⅞						

SEE DETAIL M0.00 FOR SECTION NOTES

[1] ALLOWABLE LOADS HAVE BEEN INCREASED BY A FACTOR OF 1.2 FOR LOAD COMBINATIONS INCLUDING OVERSTRENGTH, Ω_0, PER ASCE 7-10 SEC. 12.14.3.2.3.

[2] WHEN THE BOLT CENTERLINE DISTANCE EXCEEDS 12¼", THE STRUT MUST BE ROTATED TO COMPLY TO THE DETAIL.

OPM-0043-13
BY: Jeffrey Y. Kikumoto
DATE: 06/23/2016
OSHPD REVIEWED FOR CODE COMPLIANCE CALIFORNIA BUILDING CODE

MASON WEST, INC.
1601 E. Miraloma Ave. Placentia, CA 92870
TEL (714) 630 - 0701, www.masonwest.com

Jiefu "Jeff" Zhang, SE
California SE No. S5270

PAGE
M2.24

HANGER ATTACHMENT
TO CONCRETE FILLED METAL DECK
WITH (2) HILTI KB-TZ CONCRETE ANCHORS

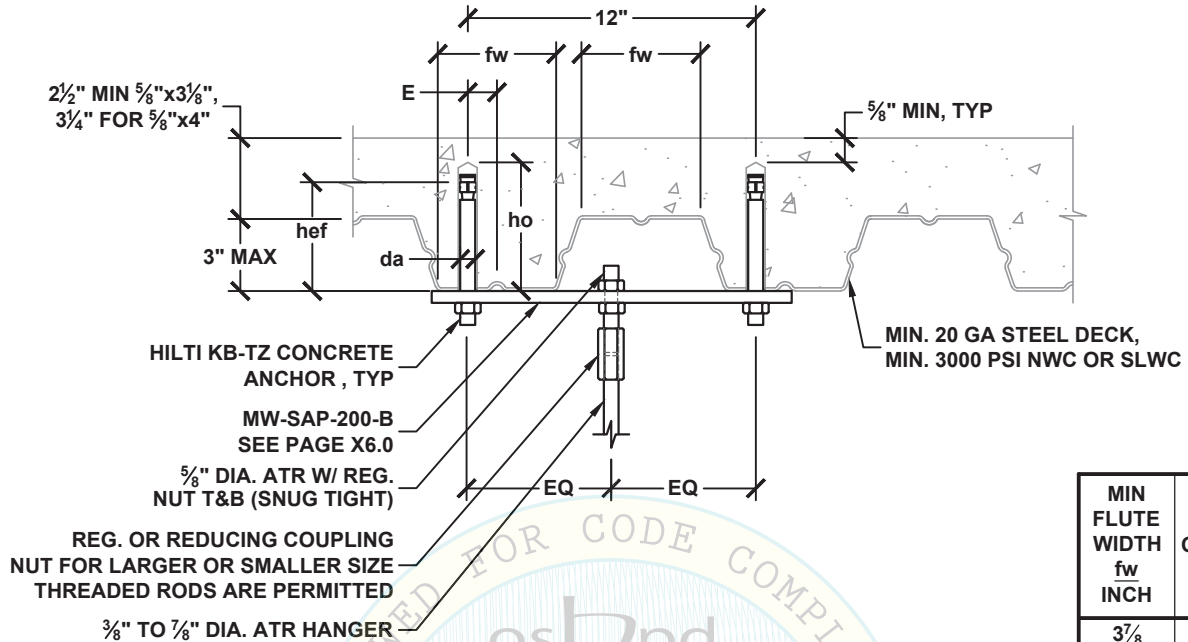

MIN FLUTE WIDTH fw INCH	MAX OFFSET E INCH
3⅞	15/16
4½	1

HANGER ATTACHMENT TYPE	STEEL COMPONENT ALLOWABLE VERTICAL LOAD Ta LBS	HANGER ATTACHMENT TYPE	CONCRETE ANCHOR ALLOWABLE VERTICAL LOAD Tac [1] LBS	ATR HANGER DIA. INCH	HILTI KB-TZ CONCRETE ANCHOR (ICC ESR-1917) SPECIAL INSPECTION REQ'D					
					DIA. da INCH	MIN EFF. EMBED. hef INCH	MIN HOLE DEPTH ho INCH	MIN SPACING Smin INCH	MIN END DIST. Cmin INCH	TORQUE REQ'D FT-LBS
38A TO 38M	1930	38A TO 38M	1640	⅜	⅝	3⅛	3¾	MAX OF: 3*hef OR 1.5*FLUTE WIDTH	4 11/16	60
50A TO 50M	1930	50A TO 50M	1640	½						
63A TO 63M	1930	63A TO 63M	1640	⅝						
75A TO 75M	1930	75A TO 75M	1640	¾						
88A TO 88M	1930	88A TO 88M	1640	⅞						
38A TO 38M	1930	38A TO 38P	3180	⅜	⅝	4	4¾	MAX OF: 3*hef OR 1.5*FLUTE WIDTH	6	60
50A TO 50M	1930	50A TO 50P	3180	½						
63A TO 63M	1930	63A TO 63P	3180	⅝						
75A TO 75M	1930	75A TO 75P	3180	¾						
88A TO 88M	1930	88A TO 88P	3180	⅞						

SEE DETAIL M0.00 FOR SECTION NOTES

[1] ALLOWABLE LOADS HAVE BEEN INCREASED BY A FACTOR OF 1.2 FOR LOAD COMBINATIONS INCLUDING OVERSTRENGTH, Ω_0, PER ASCE 7-10 SEC. 12.14.3.2.3.

OSHPD OPM-0043-13 Reviewed for Code Compliance by Jeffrey Y. Kikumoto DSA 06/23/2016 CBC 2016 CALIFORNIA BUILDING CODE

MASON WEST, INC.
1601 E. Miraloma Ave. Placentia, CA 92870
TEL (714) 630 - 0701, www.masonwest.com

Jiefu "Jeff" Zhang, SE
California SE No. S5270

PAGE
M2.25

HANGER ATTACHMENT
TO CONCRETE FILLED METAL DECK
WITH (4) HILTI KB-TZ CONCRETE ANCHORS

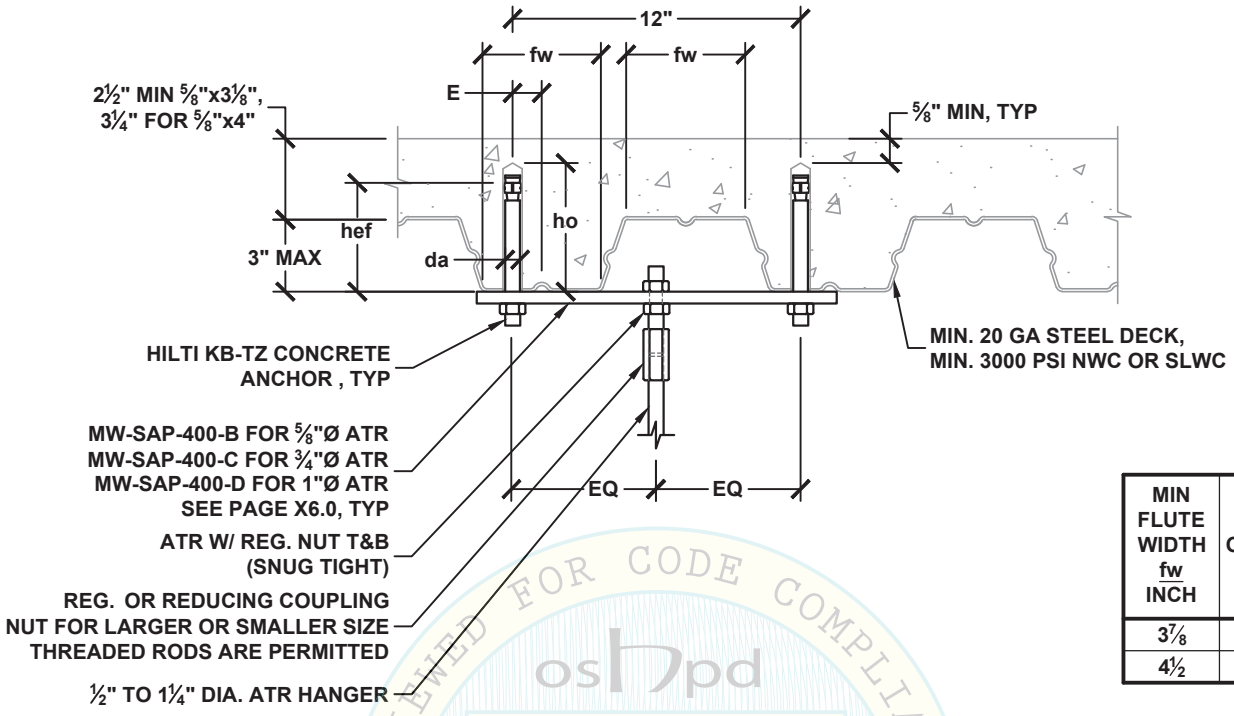

MIN FLUTE WIDTH fw INCH	MAX OFFSET E INCH
3⅞	15⁄16
4½	1

oshpd
OPM-0043-13
BY: Jeffrey Y. Kikumoto
06/23/2016
REVIEWED FOR CODE COMPLIANCE
CALIFORNIA BUILDING CODE

HANGER ATTACHMENT TYPE	STEEL COMPONENT ALLOWABLE VERTICAL LOAD Ta LBS	HANGER ATTACHMENT TYPE	CONCRETE ANCHOR ALLOWABLE VERTICAL LOAD Tac [1] LBS	ATR HANGER DIA. INCH	HILTI KB-TZ CONCRETE ANCHOR (ICC ESR-1917) SPECIAL INSPECTION REQ'D					
					DIA. da INCH	MIN EFF. EMBED. hef INCH	MIN HOLE DEPTH ho INCH	MIN SPACING Smin INCH	MIN END DIST. Cmin INCH	TORQUE REQ'D FT-LBS
50A TO 50Q	3600	50A TO 50P	3280	½	⅝	3⅛	3¾	MAX OF: 3*hef OR 1.5*FLUTE WIDTH	4 11⁄16	60
63A TO 63Q	3600	63A TO 63P	3280	⅝						
75A TO 75Q	3500	75A TO 75P	3280	¾						
88A TO 88Q	3500	88A TO 88P	3280	⅞						
100A TO 100Q	3500	100A TO 125P	3280	1						
125A TO 125Q	3500	100A TO 125P	3280	1¼						
50A TO 50Q	3600	50A TO 50R	6360	½	⅝	4	4¾	MAX OF: 3*hef OR 1.5*FLUTE WIDTH	6	60
63A TO 63Q	3600	63A TO 63R	6360	⅝						
75A TO 75Q	3500	75A TO 75R	6360	¾						
88A TO 88Q	3500	88A TO 88R	6360	⅞						
100A TO 100Q	3500	100A TO 125R	6360	1						
125A TO 125Q	3500	100A TO 125R	6360	1¼						

SEE DETAIL M0.00 FOR SECTION NOTES

[1] ALLOWABLE LOADS HAVE BEEN INCREASED BY A FACTOR OF 1.2 FOR LOAD COMBINATIONS INCLUDING OVERSTRENGTH, Ω_0, PER ASCE 7-10 SEC. 12.14.3.2.3.

MASON WEST, INC.
1601 E. Miraloma Ave. Placentia, CA 92870
TEL (714) 630 - 0701, www.masonwest.com

Jiefu "Jeff" Zhang, SE
California SE No. S5270

PAGE
M2.26

HANGER ATTACHMENT
TO CONCRETE FILLED METAL DECK
WITH (1) POWER-STUD+ SD1 CONCRETE ANCHOR

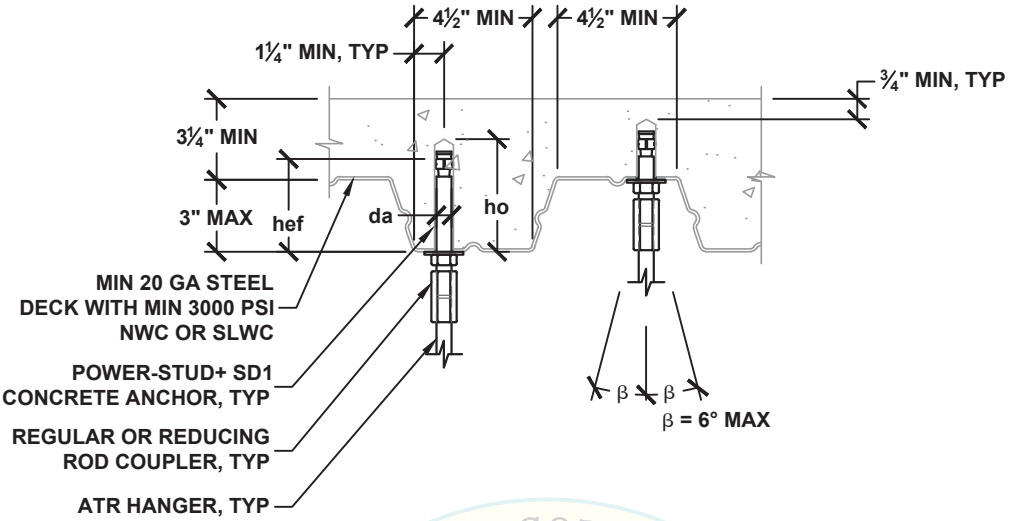

REVIEWED FOR CODE COMPLIANCE
oshpd
OPM-0043-13
BY: Jeffrey Y. Kikumoto
DATE: 06/23/2016
CALIFORNIA BUILDING CODE

HANGER ATTACHMENT TYPE	ALLOWABLE VERTICAL LOAD Ta [1] LBS	MIN ATR HANGER DIA. INCH	POWER-STUD+ SD1 CONCRETE ANCHOR (ICC ESR-2818) SPECIAL INSPECTION REQ'D					
			DIA. da INCH	MIN EFF. EMBED hef INCH	MIN HOLE DEPTH ho INCH	MIN SPACING Smin INCH	MIN END DIST. Cmin INCH	TORQUE REQ'D FT-LBS
38A TO 38F	560	⅜	⅜	2	2⅝	6¾	3⅜	20
38A TO 38J	980	⅜	½	2	2¾	6¾	3⅜	40
50A TO 50J	980	½						
63A TO 63J	980	⅝						
50A TO 50H	810	½	⅝	2¾	3¾	8¼	4⅛	80
63A TO 63H	810	⅝						
75A TO 75H	810	¾						
63A TO 63K	1160	⅝	¾	3⅛	4¼	9⅜	4¾	110
75A TO 75K	1160	¾						
88A TO 88K	1160	⅞						

SEE DETAIL M0.00 FOR SECTION NOTES

[1] ALLOWABLE LOADS HAVE BEEN INCREASED BY A FACTOR OF 1.2 FOR LOAD COMBINATIONS INCLUDING OVERSTRENGTH, Ω_0, PER ASCE 7-10 SEC. 12.14.3.2.3.

MASON WEST, INC.
1601 E. Miraloma Ave. Placentia, CA 92870
TEL (714) 630 - 0701, www.masonwest.com

Jiefu "Jeff" Zhang, SE
California SE No. S5270

PAGE
M2.30

HANGER ATTACHMENT
TO CONCRETE FILLED METAL DECK
WITH (2) POWER-STUD+ SD1 CONCRETE ANCHORS

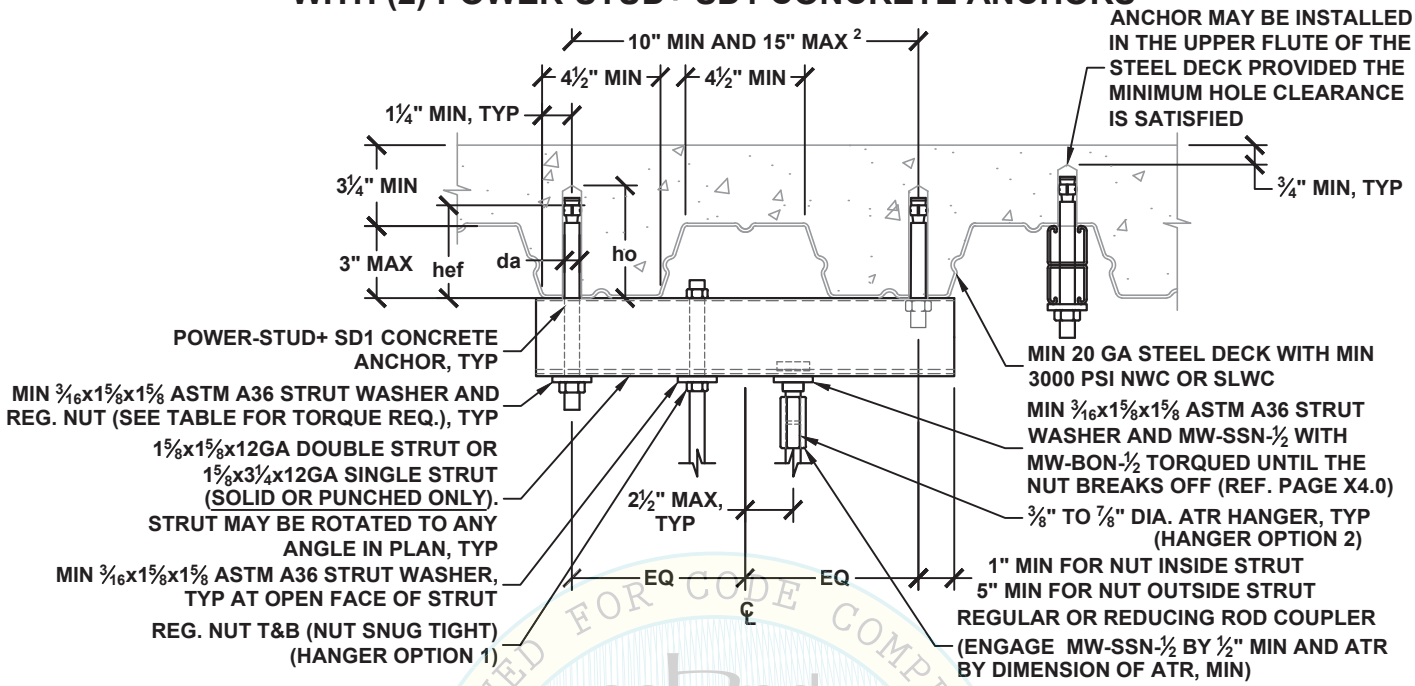

HANGER ATTACHMENT TYPE	STEEL COMPONENT ALLOWABLE VERTICAL LOAD Ta LBS	HANGER ATTACHMENT TYPE	CONCRETE ANCHOR ALLOWABLE VERTICAL LOAD Ta [1] LBS	ATR HANGER DIA. INCH	POWER-STUD+ SD1 CONCRETE ANCHOR (ICC ESR-2818) SPECIAL INSPECTION REQ'D					
					DIA. da INCH	MIN EFF. EMBED. hef INCH	MIN HOLE DEPTH ho INCH	MIN SPACING Smin INCH	MIN END DIST. Cmin INCH	TORQUE REQ'D FT-LBS
38A TO 38N	2400	38A TO 38H	750	3/8	3/8	2	2 5/8	6¾	3⅜	20
50A TO 50P	2620	50A TO 50H	750	½						
63A TO 63P	2620	63A TO 63H	750	5/8						
75A TO 75P	2620	75A TO 75H	750	¾						
88A TO 88P	2620	88A TO 88H	750	7/8						
38A TO 38N	2400	50A TO 50L	1310	3/8	½	2	2¾	6¾	3⅜	40
50A TO 50P	2620	50A TO 50L	1310	½						
63A TO 63P	2620	63A TO 63L	1310	5/8						
75A TO 75P	2620	75A TO 75L	1310	¾						
88A TO 88P	2620	88A TO 88L	1310	7/8						
38A TO 38N	2400	50A TO 50K	1080	3/8	5/8	2¾	3¾	8¼	4⅛	80
50A TO 50P	2620	50A TO 50K	1080	½						
63A TO 63P	2620	63A TO 63K	1080	5/8						
75A TO 75P	2620	75A TO 75K	1080	¾						
88A TO 88P	2620	88A TO 88K	1080	7/8						

SEE DETAIL M0.00 FOR SECTION NOTES

[1] ALLOWABLE LOADS HAVE BEEN INCREASED BY A FACTOR OF 1.2 FOR LOAD COMBINATIONS INCLUDING OVERSTRENGTH, Ω_0, PER ASCE 7-10 SEC. 12.14.3.2.3.

[2] WHEN THE BOLT CENTERLINE DISTANCE EXCEEDS 14", THE STRUT MUST BE ROTATED TO COMPLY TO THE DETAIL.

REVIEWED FOR CODE COMPLIANCE BY Jeffrey Kikumoto DATE: 06/23/2016 OSHPD OPM-0043-13 CALIFORNIA BUILDING CODE, 2013

MASON WEST, INC.
1601 E. Miraloma Ave. Placentia, CA 92870
TEL (714) 630 - 0701, www.masonwest.com

Jiefu "Jeff" Zhang, SE
California SE No. S5270

PAGE
M2.31

HANGER ATTACHMENT
TO CONCRETE FILLED METAL DECK
WITH (2) POWER-STUD+ SD1 CONCRETE ANCHORS

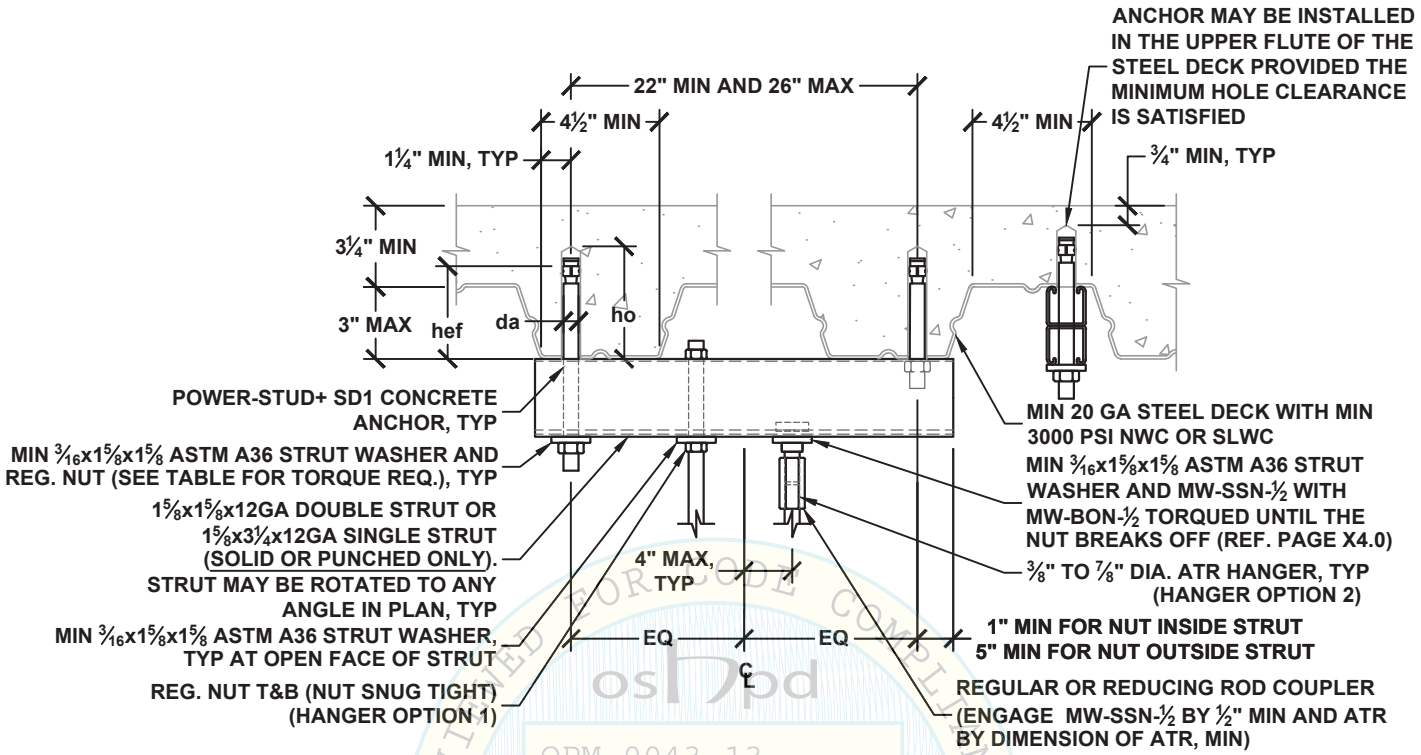

HANGER ATTACHMENT TYPE	STEEL COMPONENT ALLOWABLE VERTICAL LOAD Ta LBS	HANGER ATTACHMENT TYPE	CONCRETE ANCHOR ALLOWABLE VERTICAL LOAD Tac [1] LBS	ATR HANGER DIA. INCH	POWER-STUD+ SD1 CONCRETE ANCHOR (ICC ESR-2818) SPECIAL INSPECTION REQ'D					
					DIA. da INCH	MIN EFF. EMBED. hef INCH	MIN HOLE DEPTH ho INCH	MIN SPACING Smin INCH	MIN END DIST. Cmin INCH	TORQUE REQ'D FT-LBS
38A TO 38M	1860	38A TO 38H	820	⅜	⅜	2	2⅝	6¾	3⅜	20
50A TO 50M	1860	50A TO 50H	820	½						
63A TO 63M	1860	63A TO 63H	820	⅝						
75A TO 75M	1860	75A TO 75H	820	¾						
88A TO 88M	1860	88A TO 88H	820	⅞						
38A TO 38M	1860	38A TO 38L	1440	⅜	½	2	2¾	6¾	3⅜	40
50A TO 50M	1860	50A TO 50L	1440	½						
63A TO 63M	1860	63A TO 63L	1440	⅝						
75A TO 75M	1860	75A TO 75L	1440	¾						
88A TO 88M	1860	88A TO 88L	1440	⅞						

SEE DETAIL M0.00 FOR SECTION NOTES

[1] ALLOWABLE LOADS HAVE BEEN INCREASED BY A FACTOR OF 1.2 FOR LOAD COMBINATIONS INCLUDING OVERSTRENGTH, Ω_0, PER ASCE 7-10 SEC. 12.14.3.2.3.

OPM-0043-13
REVIEWED FOR CODE COMPLIANCE
BY: Jeffrey K. Kikumoto
DATE: 6/23/2016
CITY OF PALMDALE BUILDING CODE, 2013

MASON WEST, INC.
1601 E. Miraloma Ave. Placentia, CA 92870
TEL (714) 630 - 0701, www.masonwest.com

Jiefu "Jeff" Zhang, SE
California SE No. S5270

PAGE
M2.31.1

HANGER ATTACHMENT
TO CONCRETE FILLED METAL DECK
WITH (2) POWER-STUD+ SD1 CONCRETE ANCHORS

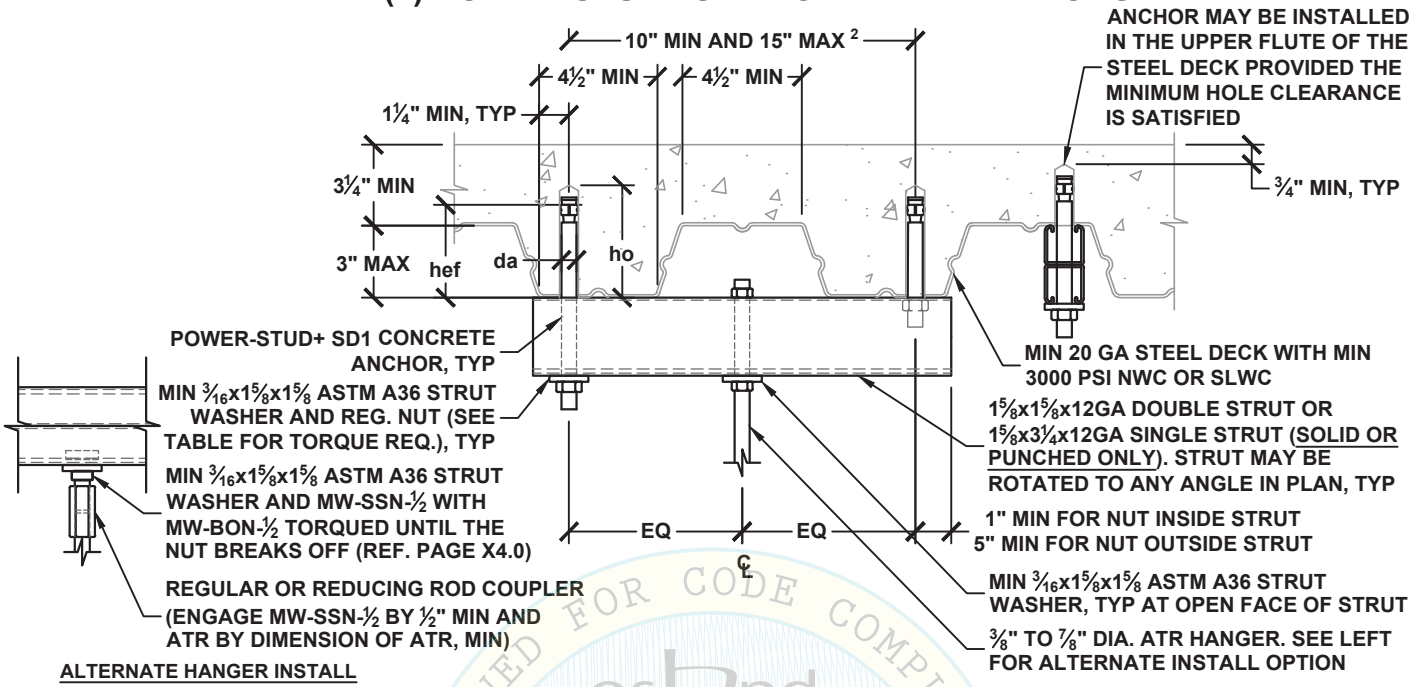

ALTERNATE HANGER INSTALL

HANGER ATTACHMENT TYPE	STEEL COMPONENT ALLOWABLE VERTICAL LOAD Ta LBS	HANGER ATTACHMENT TYPE	CONCRETE ANCHOR ALLOWABLE VERTICAL LOAD Tac [1] LBS	ATR HANGER DIA. INCH	POWER-STUD+ SD1 CONCRETE ANCHOR (ICC ESR-2818) SPECIAL INSPECTION REQ'D					
					DIA. da INCH	MIN EFF. EMBED. hef INCH	MIN HOLE DEPTH ho INCH	MIN SPACING Smin INCH	MIN END DIST. Cmin INCH	TORQUE REQ'D FT-LBS
38A TO 38N	2400	38A TO 38K	1120	⅜	⅜	2	2⅝	6¾	3⅜	20
50A TO 50P	2620	50A TO 50K	1120	½						
63A TO 63P	2620	63A TO 63K	1120	⅝						
75A TO 75P	2620	75A TO 75K	1120	¾						
88A TO 88P	2620	88A TO 88K	1120	⅞						
38A TO 38N	2400	38A TO 38M	1960	⅜	½	2	2¾	6¾	3⅜	40
50A TO 50P	2620	50A TO 50M	1960	½						
63A TO 63P	2620	63A TO 63M	1960	⅝						
75A TO 75P	2620	75A TO 75M	1960	¾						
88A TO 88P	2620	88A TO 88M	1960	⅞						
38A TO 38N	2400	38A TO 38M	1620	⅜	⅝	2¾	3¾	8¼	4⅛	80
50A TO 50P	2620	50A TO 50M	1620	½						
63A TO 63P	2620	63A TO 63M	1620	⅝						
75A TO 75P	2620	75A TO 75M	1620	¾						
88A TO 88P	2620	88A TO 88M	1620	⅞						

SEE DETAIL M0.00 FOR SECTION NOTES

[1] ALLOWABLE LOADS HAVE BEEN INCREASED BY A FACTOR OF 1.2 FOR LOAD COMBINATIONS INCLUDING OVERSTRENGTH, Ω_0, PER ASCE 7-10 SEC. 12.14.3.2.3.

[2] WHEN THE BOLT CENTERLINE DISTANCE EXCEEDS 14", THE STRUT MUST BE ROTATED TO COMPLY TO THE DETAIL.

MASON WEST, INC.
1601 E. Miraloma Ave. Placentia, CA 92870
TEL (714) 630 - 0701, www.masonwest.com

Jiefu "Jeff" Zhang, SE
California SE No. S5270

PAGE
M2.31.2

OSHPD OPM-0043-13 REVIEWED FOR CODE COMPLIANCE BY: Jeffrey Kikumoto DATE: 06/23/2016 CALIFORNIA BUILDING CODE, 2013

HANGER ATTACHMENT
TO CONCRETE FILLED METAL DECK
WITH (1) POWER-STUD+ SD1 CONCRETE ANCHOR

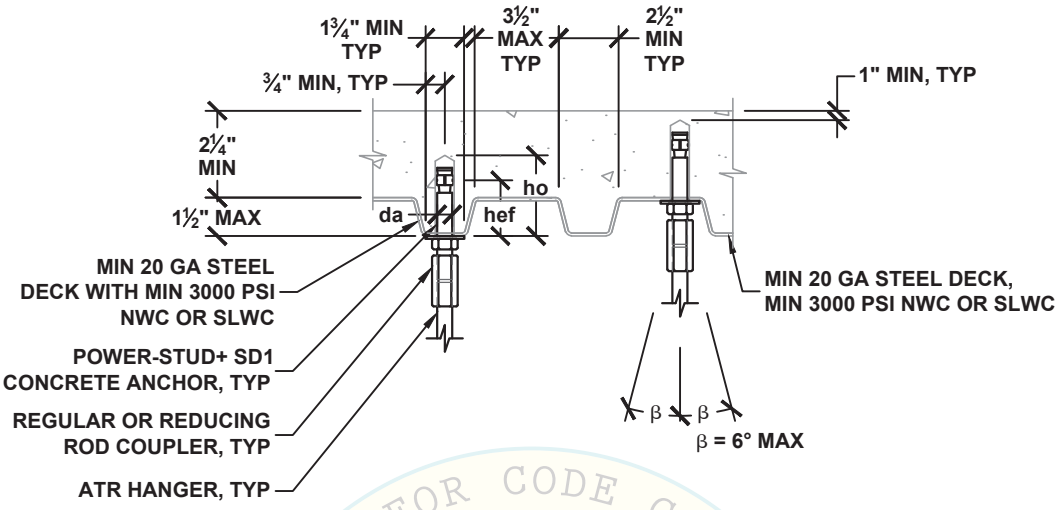

HANGER ATTACHMENT TYPE	ALLOWABLE VERTICAL LOAD Ta [1] LBS	MIN ATR HANGER DIA. INCH	POWER-STUD+ SD1 CONCRETE ANCHOR (ICC ESR-2818) SPECIAL INSPECTION REQ'D					
			DIA. da INCH	MIN EFF. EMBED hef INCH	MIN HOLE DEPTH ho INCH	MIN SPACING Smin INCH	MIN END DIST. Cmin INCH	TORQUE REQ'D FT-LBS
38A TO 38F	480	⅜	⅜	2	2⅝	6	3	20
38A TO 38G	580	⅜						
50A TO 50G	580	½	½	2	2¾	6	3	40
63A TO 63G	580	⅝						

SEE DETAIL M0.00 FOR SECTION NOTES

[1] ALLOWABLE LOADS HAVE BEEN INCREASED BY A FACTOR OF 1.2 FOR LOAD COMBINATIONS INCLUDING OVERSTRENGTH, Ω_0, PER ASCE 7-10 SEC. 12.14.3.2.3.

REVIEWED FOR CODE COMPLIANCE
OPM-0043-13
BY Jeffrey Y. Kikumoto
DATE 06/23/2016
CALIFORNIA BUILDING CODE, 2013
oshpd

MASON WEST, INC.
1601 E. Miraloma Ave. Placentia, CA 92870
TEL (714) 630 - 0701, www.masonwest.com

Jiefu "Jeff" Zhang, SE
California SE No. S5270

PAGE
M2.32

HANGER ATTACHMENT
TO CONCRETE FILLED METAL DECK
WITH (2) POWER-STUD+ SD1 CONCRETE ANCHORS

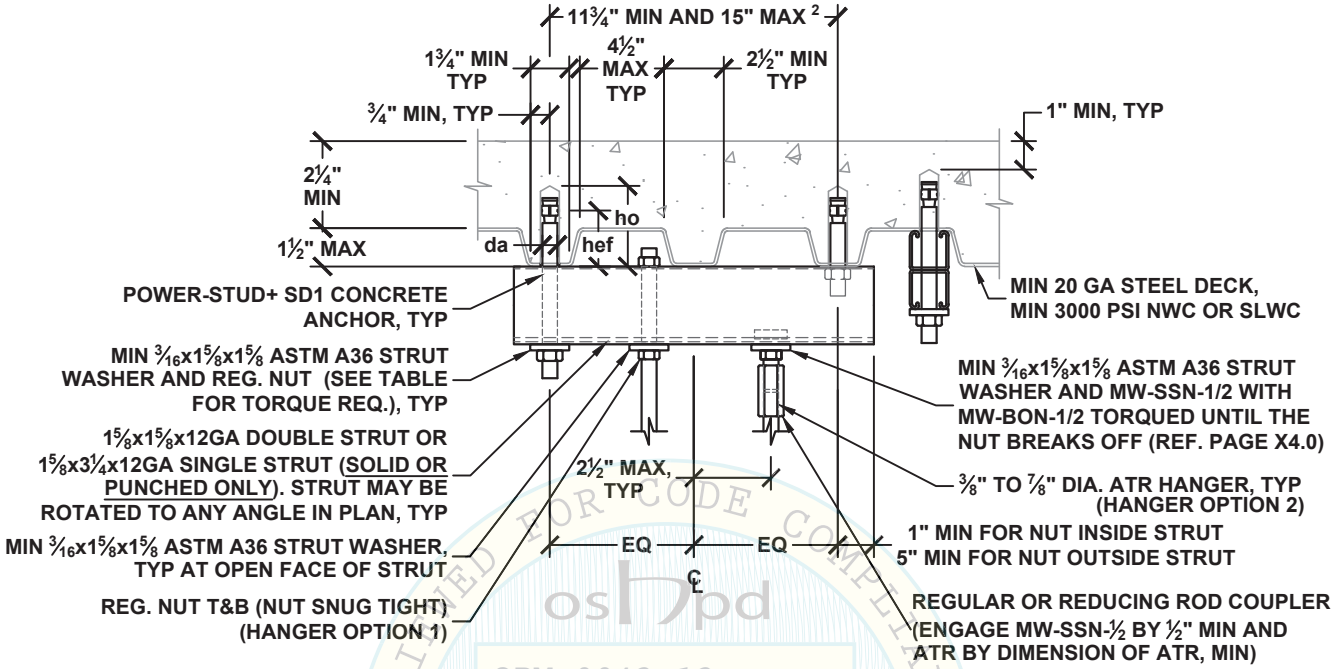

OPM-0043-13
BY: Jeffrey Y. Kikumoto
DATE: 06/23/2016
REVIEWED FOR CODE COMPLIANCE
CALIFORNIA BUILDING CODE

HANGER ATTACHMENT TYPE	STEEL COMPONENT ALLOWABLE VERTICAL LOAD Ta LBS	HANGER ATTACHMENT TYPE	CONCRETE ANCHOR ALLOWABLE VERTICAL LOAD Tac [1] LBS	ATR HANGER DIA. INCH	POWER-STUD+ SD1 CONCRETE ANCHOR (ICC ESR-2818) SPECIAL INSPECTION REQ'D					
					DIA. da INCH	MIN EFF. EMBED. hef INCH	MIN HOLE DEPTH ho INCH	MIN SPACING Smin INCH	MIN END DIST. Cmin INCH	TORQUE REQ'D FT-LBS
38A TO 38N	2400	38A TO 38G	680	⅜	⅜	2	2⅝	6	3	20
50A TO 50P	2620	50A TO 50G	680	½						
63A TO 63P	2620	63A TO 63G	680	⅝						
75A TO 75P	2620	75A TO 75G	680	¾						
88A TO 88P	2620	88A TO 88G	680	⅞						
38A TO 38N	2400	38A TO 38H	820	⅜	½	2	2¾	6	3	40
50A TO 50P	2620	50A TO 50H	820	½						
63A TO 63P	2620	63A TO 63H	820	⅝						
75A TO 75P	2620	75A TO 75H	820	¾						
88A TO 88P	2620	88A TO 88H	820	⅞						

SEE DETAIL M0.00 FOR SECTION NOTES

[1] ALLOWABLE LOADS HAVE BEEN INCREASED BY A FACTOR OF 1.2 FOR LOAD COMBINATIONS INCLUDING OVERSTRENGTH, Ω_0, PER ASCE 7-10 SEC. 12.14.3.2.3.

[2] WHEN THE BOLT CENTERLINE DISTANCE EXCEEDS 12¼", THE STRUT MUST BE ROTATED TO COMPLY TO THE DETAIL.

MASON WEST, INC.
1601 E. Miraloma Ave. Placentia, CA 92870
TEL (714) 630 - 0701, www.masonwest.com

Jiefu "Jeff" Zhang, SE
California SE No. S5270

PAGE
M2.33

HANGER ATTACHMENT
TO CONCRETE FILLED METAL DECK
WITH (2) POWER-STUD+ SD1 CONCRETE ANCHORS

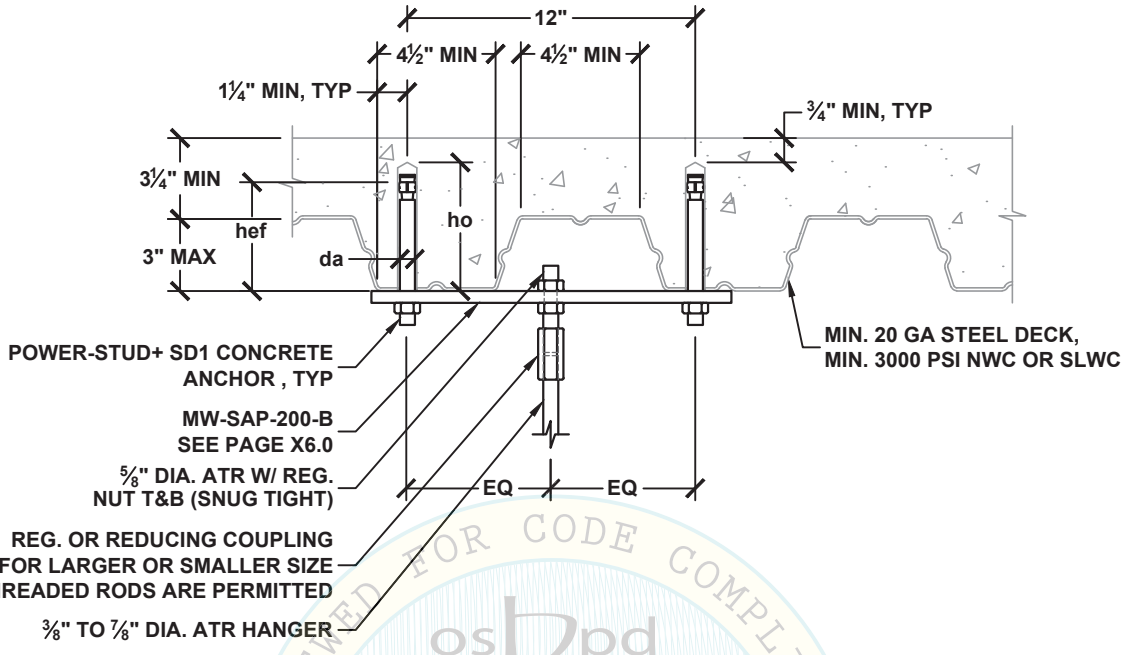

HANGER ATTACHMENT TYPE	STEEL COMPONENT ALLOWABLE VERTICAL LOAD Ta LBS	HANGER ATTACHMENT TYPE	CONCRETE ANCHOR ALLOWABLE VERTICAL LOAD Tac [1] LBS	ATR HANGER DIA. INCH	POWER-STUD+ SD1 CONCRETE ANCHOR (ICC ESR-2818) SPECIAL INSPECTION REQ'D					
					DIA. da INCH	MIN EFF. EMBED. hef INCH	MIN HOLE DEPTH ho INCH	MIN SPACING Smin INCH	MIN END DIST. Cmin INCH	TORQUE REQ'D FT-LBS
38A TO 38M	1930	38A TO 38M	1620	⅜	⅝	2¾	3¾	8¼	4⅛	80
50A TO 50M	1930	50A TO 50M	1620	½						
63A TO 63M	1930	63A TO 63M	1620	⅝						
75A TO 75M	1930	75A TO 75M	1620	¾						
88A TO 88M	1930	88A TO 88M	1620	⅞						

SEE DETAIL M0.00 FOR SECTION NOTES

[1] ALLOWABLE LOADS HAVE BEEN INCREASED BY A FACTOR OF 1.2 FOR LOAD COMBINATIONS INCLUDING OVERSTRENGTH, Ω_0, PER ASCE 7-10 SEC. 12.14.3.2.3.

OSHPD OPM 0043 13 Reviewed by Jeffrey Y. Kikumoto Date: 06/23/2016 FOR CODE COMPLIANCE 2013 CBC CALIFORNIA BUILDING CODE

MASON WEST, INC.
1601 E. Miraloma Ave. Placentia, CA 92870
TEL (714) 630 - 0701, www.masonwest.com

Jiefu "Jeff" Zhang, SE
California SE No. S5270

PAGE
M2.34

HANGER ATTACHMENT
TO CONCRETE FILLED METAL DECK
WITH (4) POWER-STUD+ SD1 CONCRETE ANCHORS

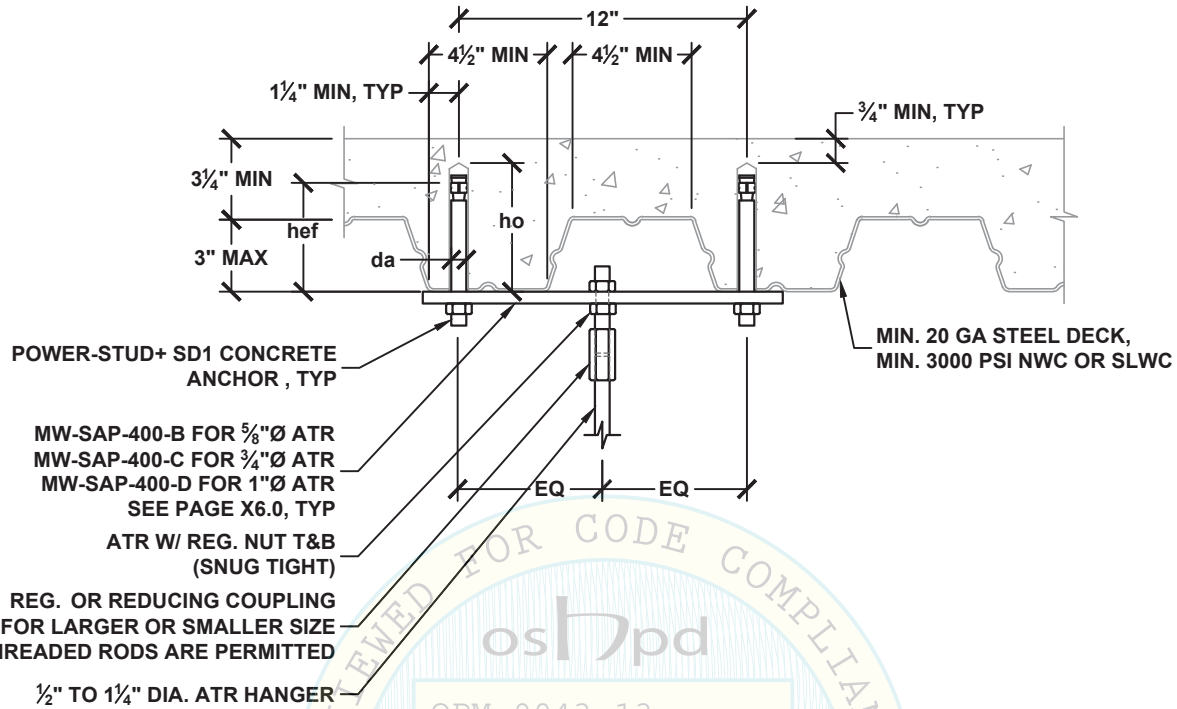

HANGER ATTACHMENT TYPE	STEEL COMPONENT ALLOWABLE VERTICAL LOAD Ta LBS	HANGER ATTACHMENT TYPE	CONCRETE ANCHOR ALLOWABLE VERTICAL LOAD Tac [1] LBS	ATR HANGER DIA. INCH	POWER-STUD+ SD1 CONCRETE ANCHOR (ICC ESR-2818) SPECIAL INSPECTION REQ'D					
					DIA. da INCH	MIN EFF. EMBED. hef INCH	MIN HOLE DEPTH ho INCH	MIN SPACING Smin INCH	MIN END DIST. Cmin INCH	TORQUE REQ'D FT-LBS
50A TO 50Q	3600	50A TO 50P	3240	½	⅝	2¾	3¾	8¼	4⅛	80
63A TO 63Q	3600	63A TO 63P	3240	⅝						
75A TO 75Q	3500	75A TO 75P	3240	¾						
88A TO 88Q	3500	88A TO 88P	3240	⅞						
100A TO 100Q	3500	100A TO 100P	3240	1						
125A TO 125Q	3500	125A TO 125P	3240	1¼						

SEE DETAIL M0.00 FOR SECTION NOTES

[1] ALLOWABLE LOADS HAVE BEEN INCREASED BY A FACTOR OF 1.2 FOR LOAD COMBINATIONS INCLUDING OVERSTRENGTH, Ω_0, PER ASCE 7-10 SEC. 12.14.3.2.3.

OSHPD
OPM-0043-13
BY: Jeffrey Y. Kikumoto
06/23/2016
REVIEWED FOR CODE COMPLIANCE
CALIFORNIA BUILDING CODE

MASON WEST, INC.
1601 E. Miraloma Ave. Placentia, CA 92870
TEL (714) 630 - 0701, www.masonwest.com

Jiefu "Jeff" Zhang, SE
California SE No. S5270

PAGE
M2.35

HANGER ATTACHMENT
TO CONCRETE FILLED METAL DECK
WITH (1) MASON IND. N.Y. SAS(E) CONCRETE ANCHOR

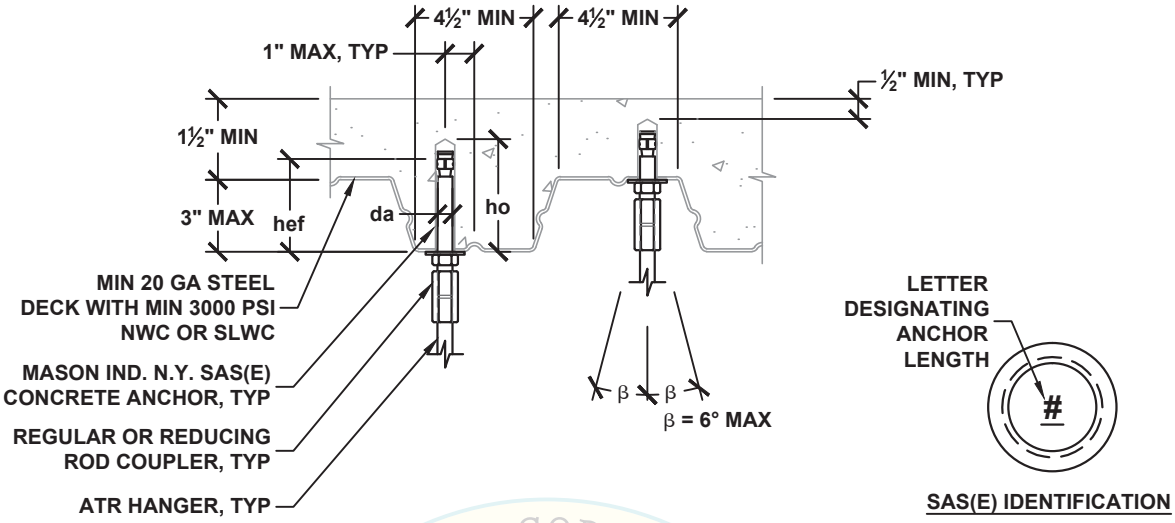

HANGER ATTACHMENT TYPE	ALLOWABLE VERTICAL LOAD Ta [1] LBS	MIN ATR HANGER DIA. INCH	MASON IND. N.Y. SAS(E) CONCRETE ANCHOR (ICC ESR-3037) SPECIAL INSPECTION REQ'D					
			DIA. da INCH	MIN EFF. EMBED hef INCH	MIN HOLE DEPTH ho INCH	MIN SPACING Smin INCH	MIN END DIST. Cmin INCH	TORQUE REQ'D FT-LBS
38A TO 38E	430	3/8	3/8	1 5/8	2 1/8	6 3/4	3 3/8	30
38A TO 38K	1070	3/8	3/8	3	3 1/2	9	4 1/2	30
38A TO 38H	840	3/8	1/2	2 1/4	3	6 3/4	3 3/8	60
50A TO 50H	840	1/2						
63A TO 63H	840	5/8						
38A TO 38K	1120	3/8	1/2	4	4 3/4	12	6	60
50A TO 50K	1120	1/2						
63A TO 63K	1120	5/8						
50A TO 50K	1070	1/2	5/8	2 3/4	3 5/8	8 1/4	4 1/8	90
63A TO 63K	1070	5/8						
75A TO 75K	1070	3/4						
50A TO 50N	2040	1/2	5/8	5	5 7/8	15	7 1/2	90
63A TO 63N	2040	5/8						
75A TO 75N	2040	3/4						
63A TO 63K	1150	5/8	3/4	3 3/8	4 3/8	10 1/8	5 1/8	150
75A TO 75K	1150	3/4						
88A TO 88K	1150	7/8						

SEE DETAIL M0.00 FOR SECTION NOTES

[1] ALLOWABLE LOADS HAVE BEEN INCREASED BY A FACTOR OF 1.2 FOR LOAD COMBINATIONS INCLUDING OVERSTRENGTH, Ω_0, PER ASCE 7-10 SEC. 12.14.3.2.3.

REVIEWED FOR CODE COMPLIANCE
OPM-0043-13
BY: Jeffrey Y. Kikumoto
DATE: 06/23/2016
2015 CALIFORNIA BUILDING CODE

MASON WEST, INC.
1601 E. Miraloma Ave. Placentia, CA 92870
TEL (714) 630 - 0701, www.masonwest.com

Jiefu "Jeff" Zhang, SE
California SE No. S5270

HANGER ATTACHMENT
TO CONCRETE FILLED METAL DECK
WITH (2) MASON IND. N.Y. SAS(E) CONCRETE ANCHORS

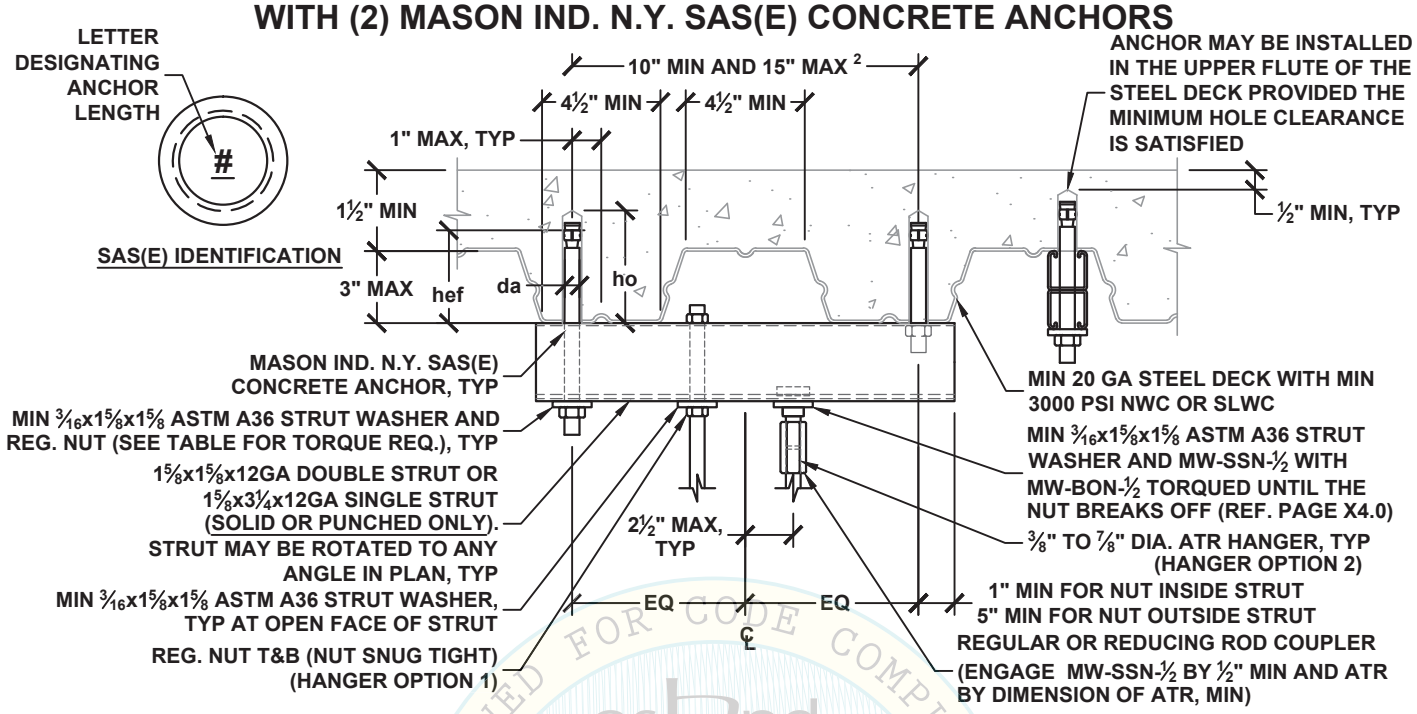

HANGER ATTACHMENT TYPE	STEEL COMPONENT ALLOWABLE VERTICAL LOAD Ta LBS	HANGER ATTACHMENT TYPE	CONCRETE ANCHOR ALLOWABLE VERTICAL LOAD Ta [1] LBS	ATR HANGER DIA. INCH	MASON IND. N.Y. SAS(E) CONCRETE ANCHOR (ICC ESR-3037) SPECIAL INSPECTION REQ'D					
					DIA. da INCH	MIN EFF. EMBED. hef INCH	MIN HOLE DEPTH ho INCH	MIN SPACING Smin INCH	MIN END DIST. Cmin INCH	TORQUE REQ'D FT-LBS
38A TO 38N	2400	38A TO 38L	1430	3/8	3/8	3	3½	9	4½	30
50A TO 50P	2620	50A TO 50L	1430	½						
63A TO 63P	2620	63A TO 63L	1430	5/8						
75A TO 75P	2620	75A TO 75L	1430	¾						
88A TO 88P	2620	88A TO 88L	1430	7/8						
38A TO 38N	2400	38A TO 38L	1490	3/8	½	4	4¾	12	6	60
50A TO 50P	2620	50A TO 50L	1490	½						
63A TO 63P	2620	63A TO 63L	1490	5/8						
75A TO 75P	2620	75A TO 75L	1490	¾						
88A TO 88P	2620	88A TO 88L	1490	7/8						
38A TO 38N	2400	38A TO 38P	2720	3/8	5/8	5	5⅞	15	7½	90
50A TO 50P	2620	50A TO 50P	2720	½						
63A TO 63P	2620	63A TO 63P	2720	5/8						
75A TO 75P	2620	75A TO 75P	2720	¾						
88A TO 88P	2620	88A TO 88P	2720	7/8						

SEE DETAIL M0.00 FOR SECTION NOTES

[1] ALLOWABLE LOADS HAVE BEEN INCREASED BY A FACTOR OF 1.2 FOR LOAD COMBINATIONS INCLUDING OVERSTRENGTH, Ω_0, PER ASCE 7-10 SEC. 12.14.3.2.3.

[2] WHEN THE BOLT CENTERLINE DISTANCE EXCEEDS 14", THE STRUT MUST BE ROTATED TO COMPLY TO THE DETAIL.

MASON WEST, INC.
1601 E. Miraloma Ave. Placentia, CA 92870
TEL (714) 630 - 0701, www.masonwest.com

Jiefu "Jeff" Zhang, SE
California SE No. S5270

PAGE
M2.41

REVIEWED FOR CODE COMPLIANCE BY JEFFREY KIKUMOTO DATE: 06/23/2016 OPM-0043-13 CALIFORNIA BUILDING CODE, 2013

HANGER ATTACHMENT
TO CONCRETE FILLED METAL DECK
WITH (2) MASON IND. N.Y. SAS(E) CONCRETE ANCHORS

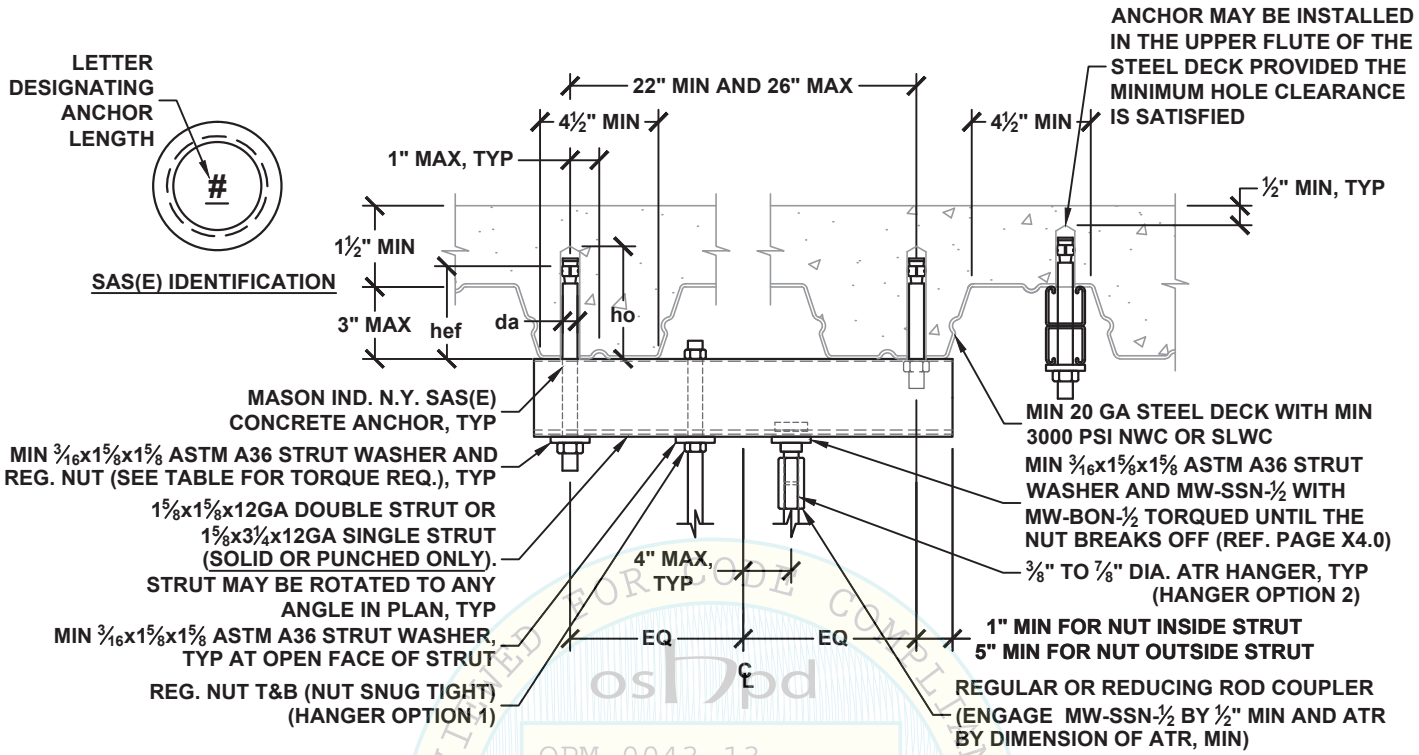

HANGER ATTACHMENT TYPE	STEEL COMPONENT ALLOWABLE VERTICAL LOAD Ta LBS	HANGER ATTACHMENT TYPE	CONCRETE ANCHOR ALLOWABLE VERTICAL LOAD Tac [1] LBS	ATR HANGER DIA. INCH	MASON IND. N.Y. SAS(E) CONCRETE ANCHOR (ICC ESR-3037) SPECIAL INSPECTION REQ'D					
					DIA. da INCH	MIN EFF. EMBED. hef INCH	MIN HOLE DEPTH ho INCH	MIN SPACING Smin INCH	MIN END DIST. Cmin INCH	TORQUE REQ'D FT-LBS
38A TO 38M	1860	38A TO 38L	1570	3/8	3/8	3	3½	9	4½	30
50A TO 50M	1860	50A TO 50L	1570	½						
63A TO 63M	1860	63A TO 63L	1570	5/8						
75A TO 75M	1860	75A TO 75L	1570	¾						
88A TO 88M	1860	88A TO 88L	1570	7/8						
38A TO 38M	1860	38A TO 38M	1640	3/8	½	4	4¾	12	6	60
50A TO 50M	1860	50A TO 50M	1640	½						
63A TO 63M	1860	63A TO 63M	1640	5/8						
75A TO 75M	1860	75A TO 75M	1640	¾						
88A TO 88M	1860	88A TO 88M	1640	7/8						

SEE DETAIL M0.00 FOR SECTION NOTES

[1] ALLOWABLE LOADS HAVE BEEN INCREASED BY A FACTOR OF 1.2 FOR LOAD COMBINATIONS INCLUDING OVERSTRENGTH, Ω_0, PER ASCE 7-10 SEC. 12.14.3.2.3.

OSHPD REVIEWED FOR CODE COMPLIANCE OPM-0043-13 BY JEFFREY Y. Kikumoto DATE 6/23/2016 CALIFORNIA BUILDING CODE, 2013

MASON WEST, INC.
1601 E. Miraloma Ave. Placentia, CA 92870
TEL (714) 630 - 0701, www.masonwest.com

Jiefu "Jeff" Zhang, SE
California SE No. S5270

PAGE
M2.41.1

HANGER ATTACHMENT
TO CONCRETE FILLED METAL DECK
WITH (2) MASON IND. N.Y. SAS(E) CONCRETE ANCHORS

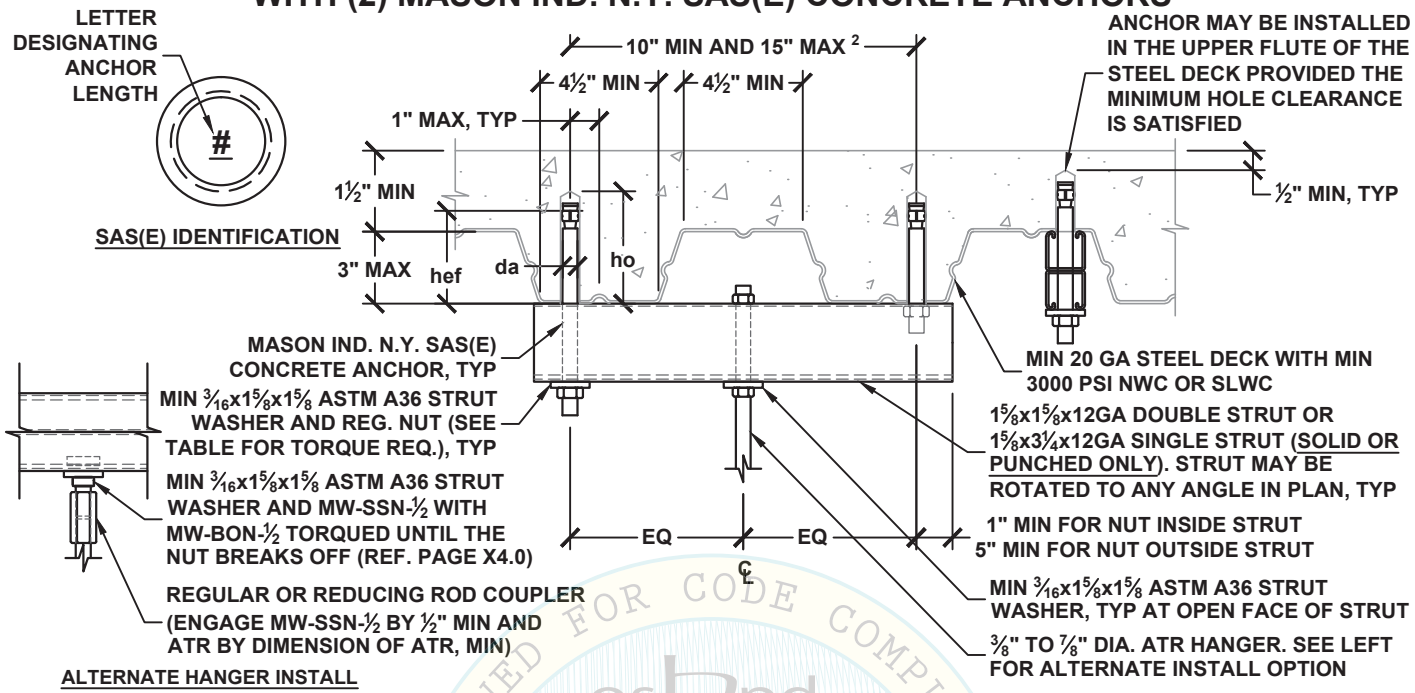

ALTERNATE HANGER INSTALL

HANGER ATTACHMENT TYPE	STEEL COMPONENT ALLOWABLE VERTICAL LOAD Ta LBS	HANGER ATTACHMENT TYPE	CONCRETE ANCHOR ALLOWABLE VERTICAL LOAD Tac [1] LBS	ATR HANGER DIA. INCH	MASON IND. N.Y. SAS(E) CONCRETE ANCHOR (ICC ESR-3037) SPECIAL INSPECTION REQ'D					
					DIA. da INCH	MIN EFF. EMBED. hef INCH	MIN HOLE DEPTH ho INCH	MIN SPACING Smin INCH	MIN END DIST. Cmin INCH	TORQUE REQ'D FT-LBS
38A TO 38N	2400	38A TO 38N	2140	⅜	⅜	3	3½	9	4½	30
50A TO 50P	2620	50A TO 50N	2140	½						
63A TO 63P	2620	63A TO 63N	2140	⅝						
75A TO 75P	2620	75A TO 75N	2140	¾						
88A TO 88P	2620	88A TO 88N	2140	⅞						
38A TO 38N	2400	38A TO 38N	2240	⅜	½	4	4¾	12	6	60
50A TO 50P	2620	50A TO 50N	2240	½						
63A TO 63P	2620	63A TO 63N	2240	⅝						
75A TO 75P	2620	75A TO 75N	2240	¾						
88A TO 88P	2620	88A TO 88N	2240	⅞						
38A TO 38N	2400	38A TO 38Q	4080	⅜	⅝	5	5⅞	15	7½	90
50A TO 50P	2620	50A TO 50Q	4080	½						
63A TO 63P	2620	63A TO 63Q	4080	⅝						
75A TO 75P	2620	75A TO 75Q	4080	¾						
88A TO 88P	2620	88A TO 88Q	4080	⅞						

SEE DETAIL M0.00 FOR SECTION NOTES

[1] ALLOWABLE LOADS HAVE BEEN INCREASED BY A FACTOR OF 1.2 FOR LOAD COMBINATIONS INCLUDING OVERSTRENGTH, Ω_0, PER ASCE 7-10 SEC. 12.14.3.2.3.

[2] WHEN THE BOLT CENTERLINE DISTANCE EXCEEDS 14", THE STRUT MUST BE ROTATED TO COMPLY TO THE DETAIL.

MASON WEST, INC.
1601 E. Miraloma Ave. Placentia, CA 92870
TEL (714) 630 - 0701, www.masonwest.com

Jiefu "Jeff" Zhang, SE
California SE No. S5270

PAGE
M2.41.2

OSHPD OPM-0043-13 REVIEWED FOR CODE COMPLIANCE BY Jeffrey Kikumoto DATE: 06/23/2016 CALIFORNIA BUILDING CODE, 2013

HANGER ATTACHMENT
TO CONCRETE FILLED METAL DECK
WITH (2) MASON IND. N.Y. SAS(E) CONCRETE ANCHORS

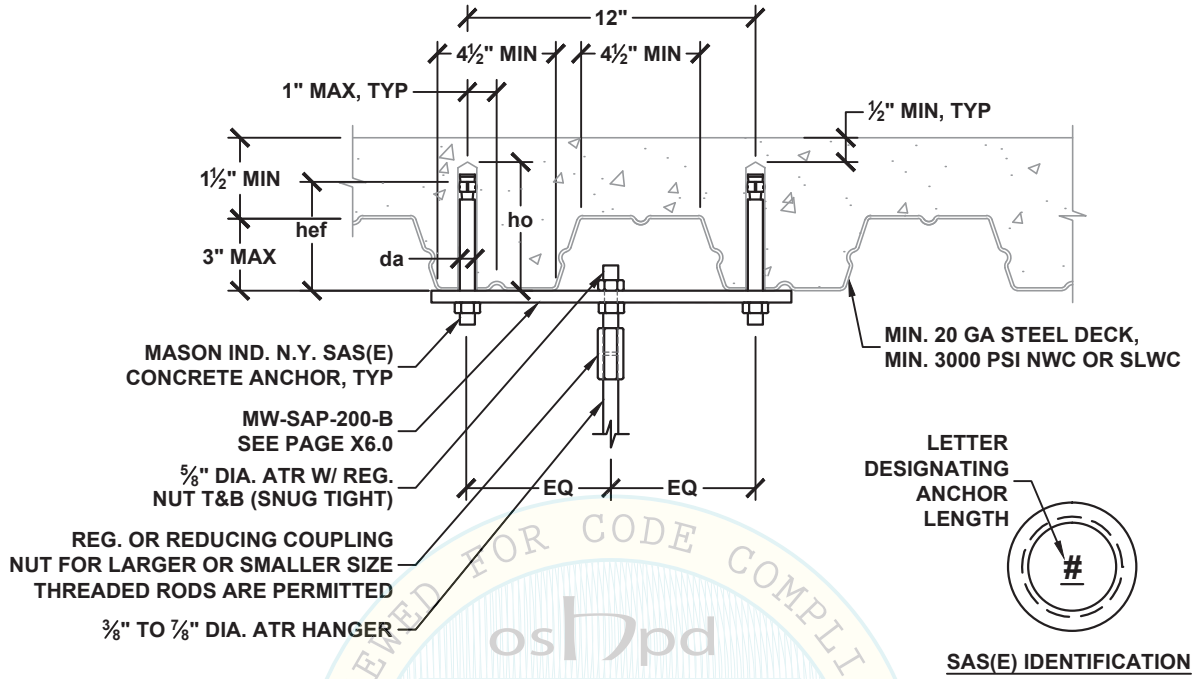

SAS(E) IDENTIFICATION

HANGER ATTACHMENT TYPE	STEEL COMPONENT ALLOWABLE VERTICAL LOAD Ta LBS	HANGER ATTACHMENT TYPE	CONCRETE ANCHOR ALLOWABLE VERTICAL LOAD Tac [1] LBS	ATR HANGER DIA. INCH	MASON IND. N.Y. SAS(E) CONCRETE ANCHOR (ICC ESR-3037) SPECIAL INSPECTION REQ'D					
					DIA. da INCH	MIN EFF. EMBED. hef INCH	MIN HOLE DEPTH ho INCH	MIN SPACING Smin INCH	MIN END DIST. Cmin INCH	TORQUE REQ'D FT-LBS
38A TO 38M	1930	38A TO 38N	2140	⅜	⅝	2¾	3⅝	8¼	4⅛	90
50A TO 50M	1930	50A TO 50N	2140	½						
63A TO 63M	1930	63A TO 63N	2140	⅝						
75A TO 75M	1930	75A TO 75N	2140	¾						
88A TO 88M	1930	88A TO 88N	2140	⅞						
38A TO 38M	1930	38A TO 38Q	4080	⅜	⅝	5	5⅞	15	7½	90
50A TO 50M	1930	50A TO 50Q	4080	½						
63A TO 63M	1930	63A TO 63Q	4080	⅝						
75A TO 75M	1930	75A TO 75Q	4080	¾						
88A TO 88M	1930	88A TO 88Q	4080	⅞						

SEE DETAIL M0.00 FOR SECTION NOTES

[1] ALLOWABLE LOADS HAVE BEEN INCREASED BY A FACTOR OF 1.2 FOR LOAD COMBINATIONS INCLUDING OVERSTRENGTH, Ω_0, PER ASCE 7-10 SEC. 12.14.3.2.3.

OSHPD OPM-0043-13 Reviewed by Jeffrey Y. Kikumoto Date: 06/23/2016 CODE COMPLIANCE CALIFORNIA BUILDING CODE

MASON WEST, INC.
1601 E. Miraloma Ave. Placentia, CA 92870
TEL (714) 630 - 0701, www.masonwest.com

Jiefu "Jeff" Zhang, SE
California SE No. S5270

PAGE
M2.42

HANGER ATTACHMENT
TO CONCRETE FILLED METAL DECK
WITH (4) MASON IND. N.Y. SAS(E) CONCRETE ANCHORS

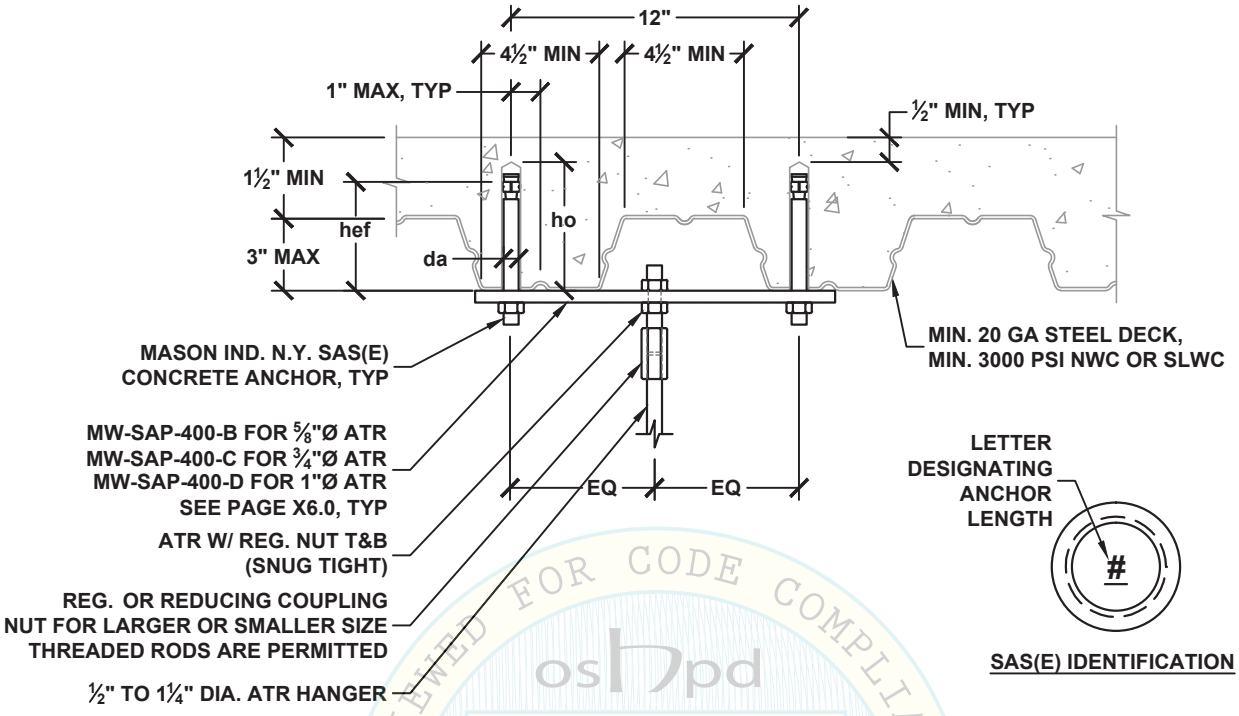

REVIEWED FOR CODE COMPLIANCE
CALIFORNIA BUILDING CODE
oshpd
OPM-0043-13
BY: Jeffrey Y. Kikumoto
06/23/2016

HANGER ATTACHMENT TYPE	STEEL COMPONENT ALLOWABLE VERTICAL LOAD Ta LBS	HANGER ATTACHMENT TYPE	CONCRETE ANCHOR ALLOWABLE VERTICAL LOAD Tac [1] LBS	ATR HANGER DIA. INCH	MASON IND. N.Y. SAS(E) CONCRETE ANCHOR (ICC ESR-3037) SPECIAL INSPECTION REQ'D					
					DIA. da INCH	MIN EFF. EMBED. hef INCH	MIN HOLE DEPTH ho INCH	MIN SPACING Smin INCH	MIN END DIST. Cmin INCH	TORQUE REQ'D FT-LBS
50A TO 50Q	3600	50A TO 50Q	4280	½	⅝	2¾	3⅝	8¼	4⅛	90
63A TO 63Q	3600	63A TO 63Q	4280	⅝						
75A TO 75Q	3500	75A TO 75Q	4280	¾						
88A TO 88Q	3500	88A TO 88Q	4280	⅞						
100A TO 100Q	3500	100A TO 100Q	4280	1						
125A TO 125Q	3500	125A TO 125Q	4280	1¼						
50A TO 50Q	3600	50A TO 50S	8160	½	⅝	5	5⅞	15	7½	90
63A TO 63Q	3600	63A TO 63S	8160	⅝						
75A TO 75Q	3500	75A TO 75S	8160	¾						
88A TO 88Q	3500	88A TO 88S	8160	⅞						
100A TO 100Q	3500	75A TO 75S	8160	1						
125A TO 125Q	3500	88A TO 88S	8160	1¼						

SEE DETAIL M0.00 FOR SECTION NOTES

[1] ALLOWABLE LOADS HAVE BEEN INCREASED BY A FACTOR OF 1.2 FOR LOAD COMBINATIONS INCLUDING OVERSTRENGTH, Ω_0, PER ASCE 7-10 SEC. 12.14.3.2.3.

MASON WEST, INC.
1601 E. Miraloma Ave. Placentia, CA 92870
TEL (714) 630 - 0701, www.masonwest.com

Jiefu "Jeff" Zhang, SE
California SE No. S5270

HANGER ATTACHMENT
TO CONCRETE FILLED METAL DECK
WITH (1) POWER-STUD+ SD2 CONCRETE ANCHOR

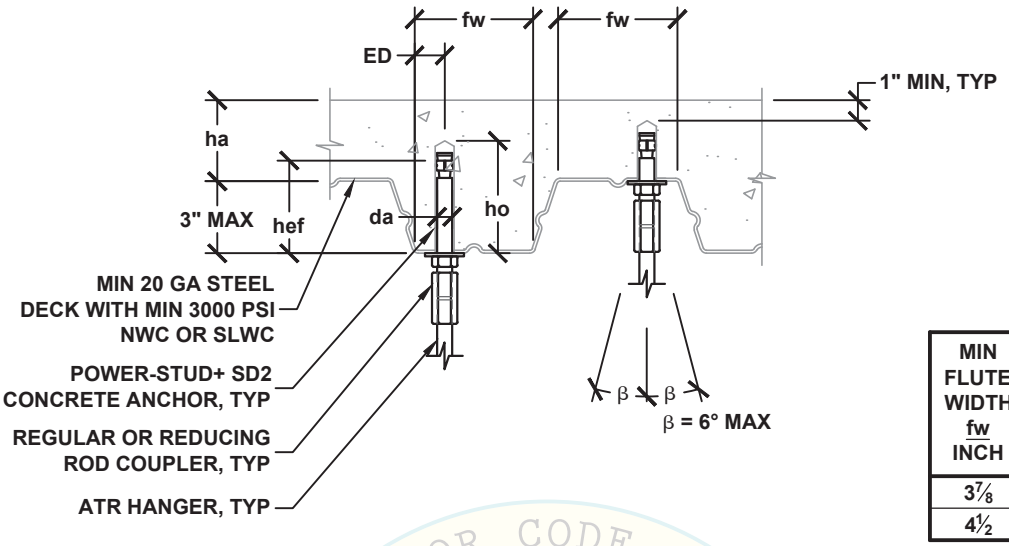

MIN FLUTE WIDTH fw INCH	MIN EDGE DIST ED INCH	MIN CONC. COVER ha INCH
3⅞	1	2
4½	1¼	3¼

HANGER ATTACHMENT TYPE	ALLOWABLE VERTICAL LOAD Ta [1] LBS	MIN ATR HANGER DIA. INCH	POWER-STUD+ SD2 CONCRETE ANCHOR (ICC ESR-2502) SPECIAL INSPECTION REQ'D					
			DIA. da INCH	MIN EFF. EMBED hef INCH	MIN HOLE DEPTH ho INCH	MIN SPACING Smin INCH	MIN END DIST. Cmin INCH	TORQUE REQ'D FT-LBS
38A TO 38G	590	⅜	⅜	2	2⅝	MAX OF: 3*hef OR 1.5*FLUTE WIDTH	3⅜	20
38A TO 38G	600	⅜	½	2	2¾		3⅜	40
50A TO 50G	600	½						
63A TO 63G	600	⅝						
38A TO 38K	1060	⅜	½	3¼	4		4⅞	40
50A TO 50K	1060	½						
63A TO 63K	1060	⅝						
FOR fw ≥ 4½"								
50A TO 50L	1350	½	⅝	3¼	4¼	MAX OF: 3*hef OR 1.5*FLUTE WIDTH	4⅞	60
63A TO 63L	1350	⅝						
75A TO 75L	1350	¾						
50A TO 50N	2140	½	⅝	4¼	5¼		6⅜	60
63A TO 63N	2140	⅝						
75A TO 75N	2140	¾						
63A TO 63L	1420	⅝	¾	3¾	5		5⅝	110
75A TO 75L	1420	¾						
88A TO 88L	1420	⅞						

SEE DETAIL M0.00 FOR SECTION NOTES

[1] ALLOWABLE LOADS HAVE BEEN INCREASED BY A FACTOR OF 1.2 FOR LOAD COMBINATIONS INCLUDING OVERSTRENGTH, Ω_0, PER ASCE 7-10 SEC. 12.14.3.2.3.

REVIEWED FOR CODE COMPLIANCE
OSHPD
OPM-0043-13
DATE: 06/23/2016
BY: Jeffrey Kikumoto
CALIFORNIA BUILDING CODE, 2013

MASON WEST, INC.
1601 E. Miraloma Ave. Placentia, CA 92870
TEL (714) 630 - 0701, www.masonwest.com

Jiefu "Jeff" Zhang, SE
California SE No. S5270

PAGE
M2.60

HANGER ATTACHMENT
TO CONCRETE FILLED METAL DECK
WITH (2) POWER-STUD+ SD2 CONCRETE ANCHORS

MIN FLUTE WIDTH fw INCH	MIN EDGE DIST ED INCH	MIN CONC. COVER ha INCH
3⅞	1	2
4½	1¼	3¼

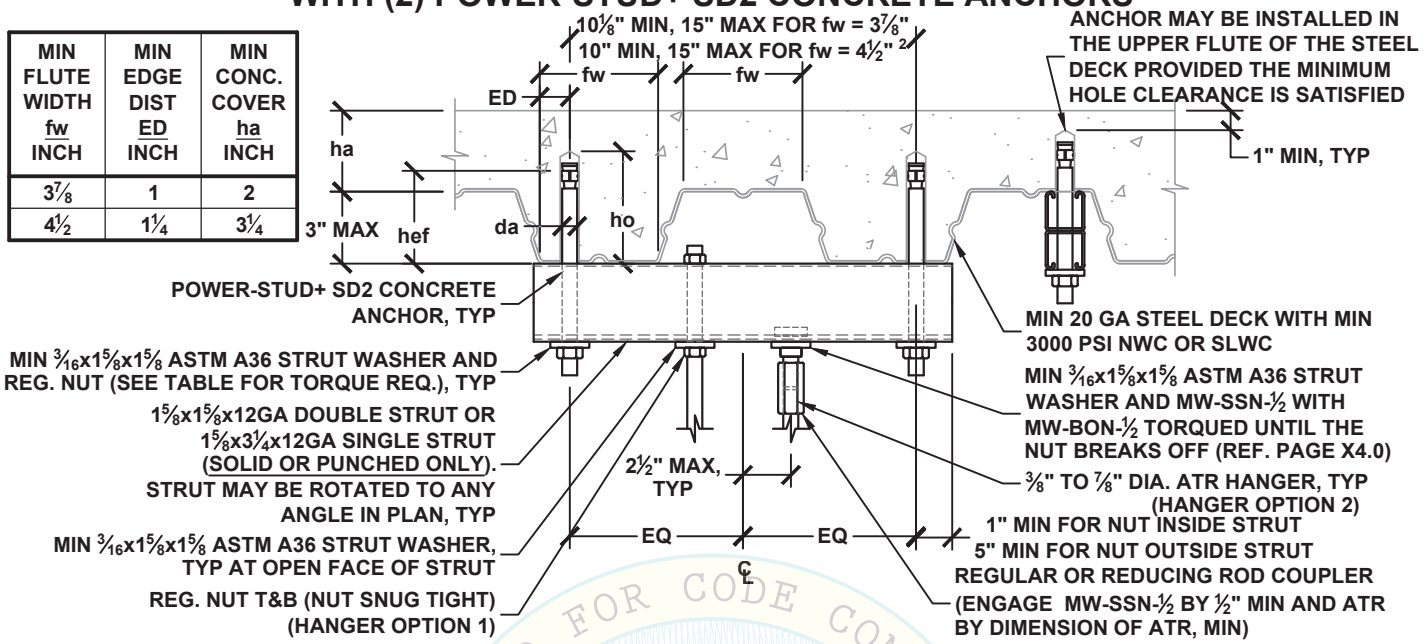

HANGER ATTACHMENT TYPE	STEEL COMPONENT ALLOWABLE VERTICAL LOAD Ta LBS	HANGER ATTACHMENT TYPE	CONCRETE ANCHOR ALLOWABLE VERTICAL LOAD Tac [1] LBS	ATR HANGER DIA. INCH	POWER-STUD+ SD2 CONCRETE ANCHOR (ICC ESR-2502) SPECIAL INSPECTION REQ'D					
					DIA. da INCH	MIN EFF. EMBED. hef INCH	MIN HOLE DEPTH ho INCH	MIN SPACING Smin INCH	MIN END DIST. Cmin INCH	TORQUE REQ'D FT-LBS
38A TO 38N	2400	38A TO 38H	790	⅜	⅜	2	2⅝	MAX OF: 3*hef OR 1.5*FLUTE WIDTH	3⅜	20
50A TO 50P	2620	50A TO 50H	790	½						
63A TO 63P	2620	63A TO 63H	790	⅝						
75A TO 75P	2620	75A TO 75H	790	¾						
88A TO 88P	2620	88A TO 88H	790	⅞						
38A TO 38N	2400	50A TO 50L	1410	⅜	½	3¼	4	MAX OF: 3*hef OR 1.5*FLUTE WIDTH	4⅞	40
50A TO 50P	2620	50A TO 50L	1410	½						
63A TO 63P	2620	63A TO 63L	1410	⅝						
75A TO 75P	2620	75A TO 75L	1410	¾						
88A TO 88P	2620	88A TO 88L	1410	⅞						
FOR fw ≥ 4½"										
38A TO 38N	2400	50A TO 50P	2850	⅜	⅝	4¼	5¼	MAX OF: 3*hef OR 1.5*FLUTE WIDTH	6⅜	60
50A TO 50P	2620	50A TO 50P	2850	½						
63A TO 63P	2620	63A TO 63P	2850	⅝						
75A TO 75P	2620	75A TO 75P	2850	¾						
88A TO 88P	2620	88A TO 88P	2850	⅞						

SEE DETAIL M0.00 FOR SECTION NOTES

[1] ALLOWABLE LOADS HAVE BEEN INCREASED BY A FACTOR OF 1.2 FOR LOAD COMBINATIONS INCLUDING OVERSTRENGTH, Ω_0, PER ASCE 7-10 SEC. 12.14.3.2.3.

[2] WHEN THE BOLT CENTERLINE DISTANCE EXCEEDS 13⅞" FOR fw = 3⅞" OR 14" FOR fw = 4½", THE STRUT MUST BE ROTATED TO COMPLY TO THE DETAIL.

MASON WEST, INC.
1601 E. Miraloma Ave. Placentia, CA 92870
TEL (714) 630 - 0701, www.masonwest.com

Jiefu "Jeff" Zhang, SE
California SE No. S5270

PAGE
M2.61

REVIEWED FOR CODE COMPLIANCE
OPM-0043-13
BY: Jeffrey Y. Kikumoto
DATE: 06/23/2016
CITY OF PLACENTIA BUILDING CODE, 2013

HANGER ATTACHMENT
TO CONCRETE FILLED METAL DECK
WITH (2) POWER-STUD+ SD2 CONCRETE ANCHORS

MIN FLUTE WIDTH fw INCH	MIN EDGE DIST ED INCH	MIN CONC. COVER ha INCH
3⅞	1	2
4½	1¼	3¼

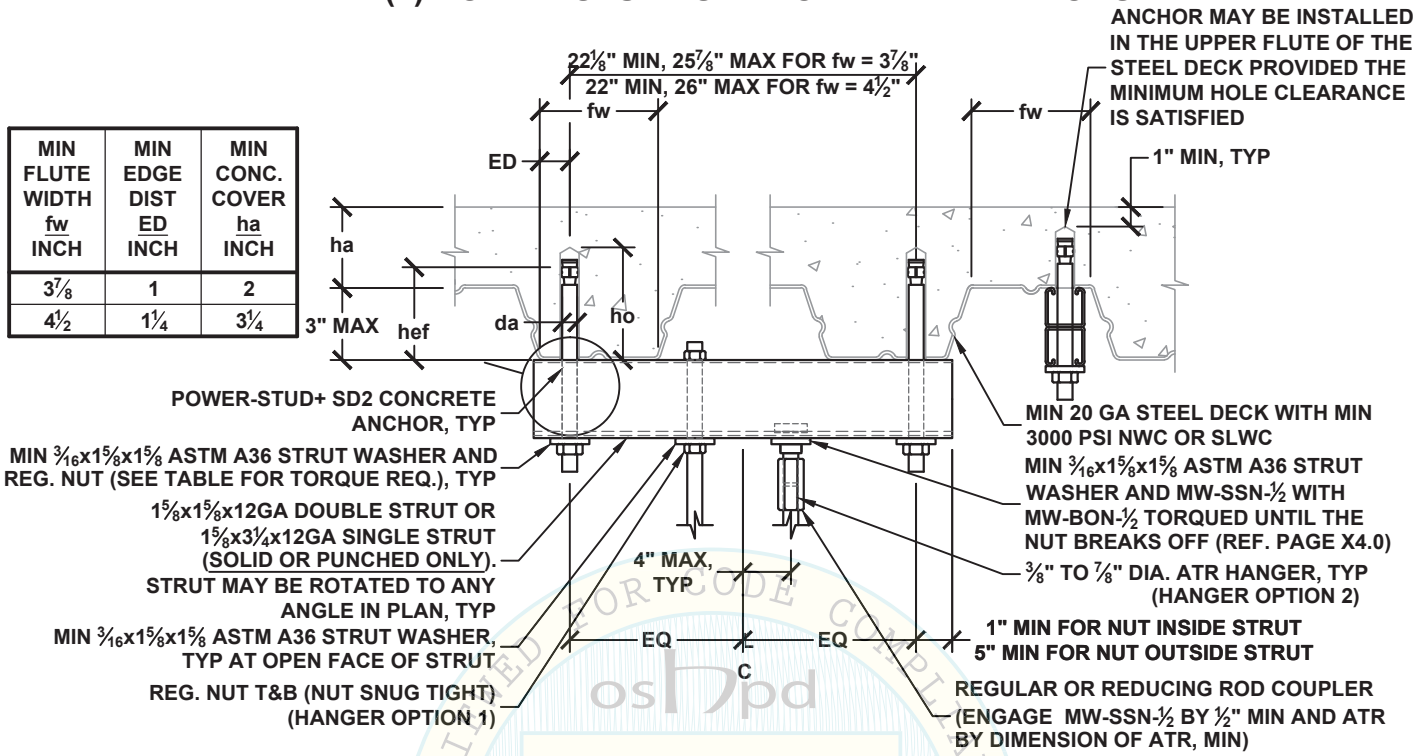

HANGER ATTACHMENT TYPE	STEEL COMPONENT ALLOWABLE VERTICAL LOAD Ta LBS	HANGER ATTACHMENT TYPE	CONCRETE ANCHOR ALLOWABLE VERTICAL LOAD Tac [1] LBS	ATR HANGER DIA. INCH	POWER-STUD+ SD2 CONCRETE ANCHOR (ICC ESR-2502) SPECIAL INSPECTION REQ'D					
					DIA. da INCH	MIN EFF. EMBED. hef INCH	MIN HOLE DEPTH ho INCH	MIN SPACING Smin INCH	MIN END DIST. Cmin INCH	TORQUE REQ'D FT-LBS
38A TO 38M	1860	38A TO 38J	870	⅜	⅜	2	2⅝	MAX OF: 3*hef OR 1.5*FLUTE WIDTH	3⅜	20
50A TO 50M	1860	50A TO 50J	870	½						
63A TO 63M	1860	63A TO 63J	870	⅝						
75A TO 75M	1860	75A TO 75J	870	¾						
88A TO 88M	1860	88A TO 88J	870	⅞						
38A TO 38M	1860	38A TO 38L	1550	⅜	½	3¼	4	MAX OF: 3*hef OR 1.5*FLUTE WIDTH	4⅞	40
50A TO 50M	1860	50A TO 50L	1550	½						
63A TO 63M	1860	63A TO 63L	1550	⅝						
75A TO 75M	1860	75A TO 75L	1550	¾						
88A TO 88M	1860	88A TO 88L	1550	⅞						

SEE DETAIL M0.00 FOR SECTION NOTES

[1] ALLOWABLE LOADS HAVE BEEN INCREASED BY A FACTOR OF 1.2 FOR LOAD COMBINATIONS INCLUDING OVERSTRENGTH, Ω_0, PER ASCE 7-10 SEC. 12.14.3.2.3.

OPM-0043-13
REVIEWED FOR CODE COMPLIANCE
BY: Jeffrey K. Kikumoto
DATE: 6/23/2016
FLORIDA BUILDING CODE

MASON WEST, INC.
1601 E. Miraloma Ave. Placentia, CA 92870
TEL (714) 630 - 0701, www.masonwest.com

Jiefu "Jeff" Zhang, SE
California SE No. S5270

PAGE
M2.61.1

HANGER ATTACHMENT
TO CONCRETE FILLED METAL DECK
WITH (2) POWER-STUD+ SD2 CONCRETE ANCHORS

MIN FLUTE WIDTH fw INCH	MIN EDGE DIST ED INCH	MIN CONC. COVER ha INCH
3⅞	1	2
4½	1¼	3¼

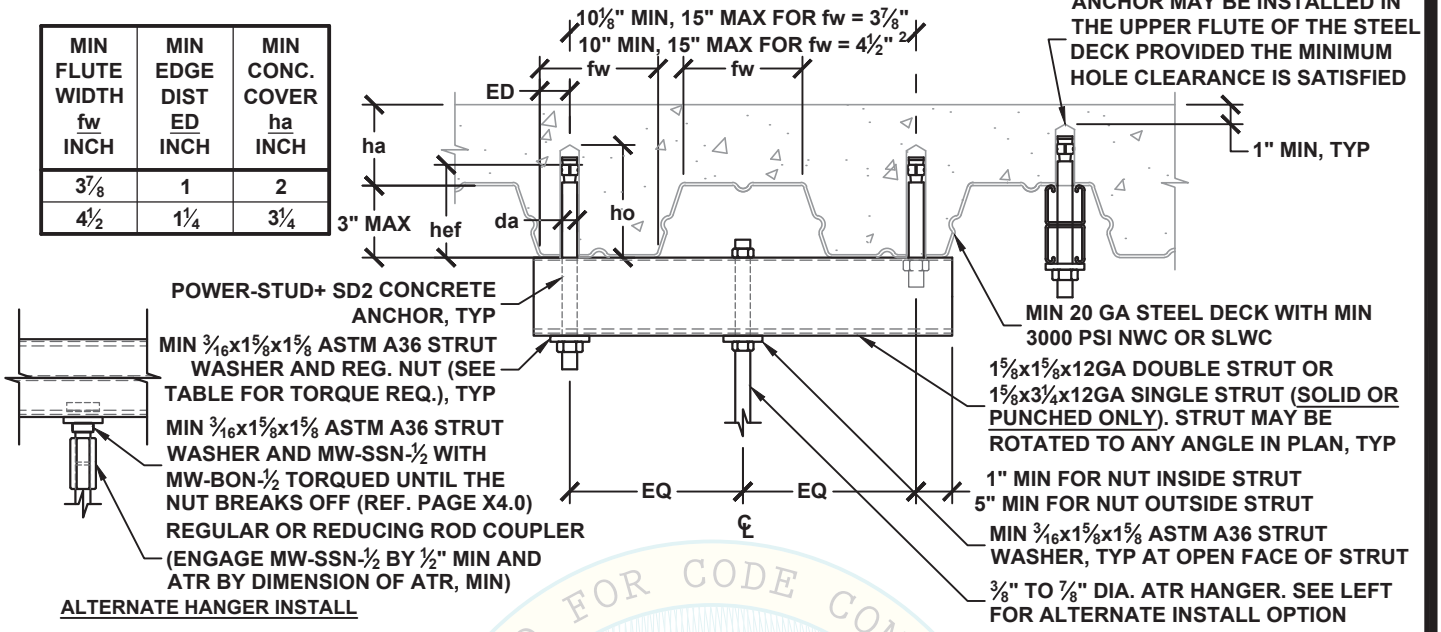

HANGER ATTACHMENT TYPE	STEEL COMPONENT ALLOWABLE VERTICAL LOAD Ta LBS	HANGER ATTACHMENT TYPE	CONCRETE ANCHOR ALLOWABLE VERTICAL LOAD Tac [1] LBS	ATR HANGER DIA. INCH	POWER-STUD+ SD2 CONCRETE ANCHOR (ICC ESR-2502) SPECIAL INSPECTION REQ'D					
					DIA. da INCH	MIN EFF. EMBED. hef INCH	MIN HOLE DEPTH ho INCH	MIN SPACING Smin INCH	MIN END DIST. Cmin INCH	TORQUE REQ'D FT-LBS
38A TO 38N	2400	38A TO 38K	1180	⅜	⅜	2	2⅝	MAX OF: 3*hef OR 1.5*FLUTE WIDTH	3⅜	20
50A TO 50P	2620	50A TO 50K	1180	½						
63A TO 63P	2620	63A TO 63K	1180	⅝						
75A TO 75P	2620	75A TO 75K	1180	¾						
88A TO 88P	2620	88A TO 88K	1180	⅞						
38A TO 38N	2400	38A TO 38N	2120	⅜	½	3¼	4	MAX OF: 3*hef OR 1.5*FLUTE WIDTH	4⅞	40
50A TO 50P	2620	50A TO 50N	2120	½						
63A TO 63P	2620	63A TO 63N	2120	⅝						
75A TO 75P	2620	75A TO 75N	2120	¾						
88A TO 88P	2620	88A TO 88N	2120	⅞						
FOR fw ≥ 4½"										
38A TO 38N	2400	38A TO 38Q	4280	⅜	⅝	4¼	5¼	MAX OF: 3*hef OR 1.5*FLUTE WIDTH	6⅜	60
50A TO 50P	2620	50A TO 50Q	4280	½						
63A TO 63P	2620	63A TO 63Q	4280	⅝						
75A TO 75P	2620	75A TO 75Q	4280	¾						
88A TO 88P	2620	88A TO 88Q	4280	⅞						

SEE DETAIL M0.00 FOR SECTION NOTES

[1] ALLOWABLE LOADS HAVE BEEN INCREASED BY A FACTOR OF 1.2 FOR LOAD COMBINATIONS INCLUDING OVERSTRENGTH, Ω_0, PER ASCE 7-10 SEC. 12.14.3.2.3.

[2] WHEN THE BOLT CENTERLINE DISTANCE EXCEEDS 13⅞" FOR fw = 3⅞" OR 14" FOR fw = 4½", THE STRUT MUST BE ROTATED TO COMPLY TO THE DETAIL.

MASON WEST, INC.
1601 E. Miraloma Ave. Placentia, CA 92870
TEL (714) 630 - 0701, www.masonwest.com

Jiefu "Jeff" Zhang, SE
California SE No. S5270

PAGE
M2.61.2

OSHPD REVIEWED FOR CODE COMPLIANCE OPM-0043-13 BY: Jeffrey Y. Kikumoto DATE 06/23/2016 CBC 2013 CALIFORNIA BUILDING CODE

HANGER ATTACHMENT
TO CONCRETE FILLED METAL DECK
WITH (1) POWER-STUD+ SD2 CONCRETE ANCHOR

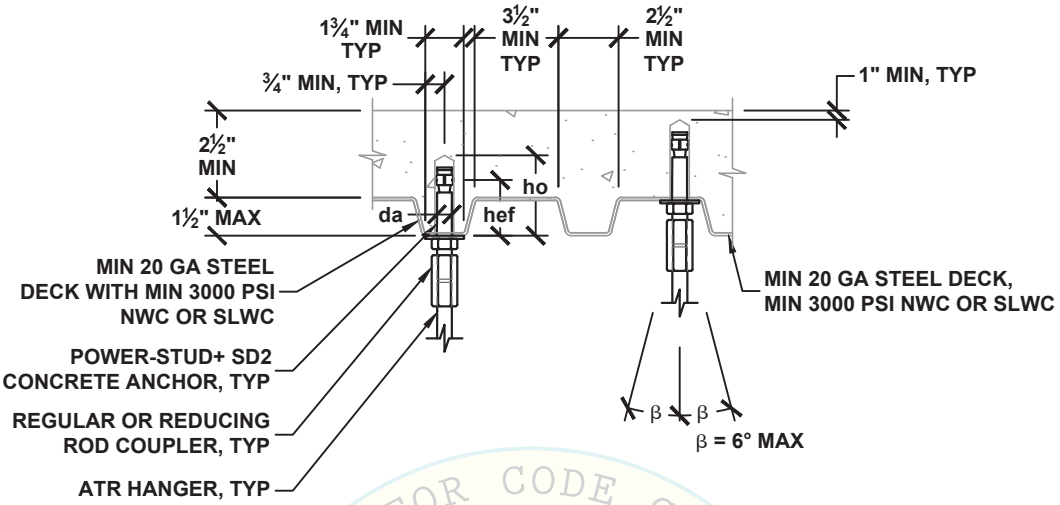

HANGER ATTACHMENT TYPE	ALLOWABLE VERTICAL LOAD Ta [1] LBS	MIN ATR HANGER DIA. INCH	POWER-STUD+ SD2 CONCRETE ANCHOR (ICC ESR-2502) SPECIAL INSPECTION REQ'D					
			DIA. da INCH	MIN EFF. EMBED hef INCH	MIN HOLE DEPTH ho INCH	MIN SPACING Smin INCH	MIN END DIST. Cmin INCH	TORQUE REQ'D FT-LBS
38A TO 38F	510	⅜	⅜	2	2⅝	6	3	20
38A TO 38G	590	⅜	½	2	2¾	6	3	40
50A TO 50G	590	½						
63A TO 63G	590	⅝						

SEE DETAIL M0.00 FOR SECTION NOTES

[1] ALLOWABLE LOADS HAVE BEEN INCREASED BY A FACTOR OF 1.2 FOR LOAD COMBINATIONS INCLUDING OVERSTRENGTH, Ω_0, PER ASCE 7-10 SEC. 12.14.3.2.3.

REVIEWED FOR CODE COMPLIANCE
OSHPD
OPM-0043-13
BY Jeffrey Y. Kikumoto
DATE 06/23/2016
CALIFORNIA BUILDING CODE, 2013

MASON WEST, INC.
1601 E. Miraloma Ave. Placentia, CA 92870
TEL (714) 630 - 0701, www.masonwest.com

Jiefu "Jeff" Zhang, SE
California SE No. S5270

PAGE
M2.62

HANGER ATTACHMENT
TO CONCRETE FILLED METAL DECK
WITH (2) POWER-STUD+ SD2 CONCRETE ANCHORS

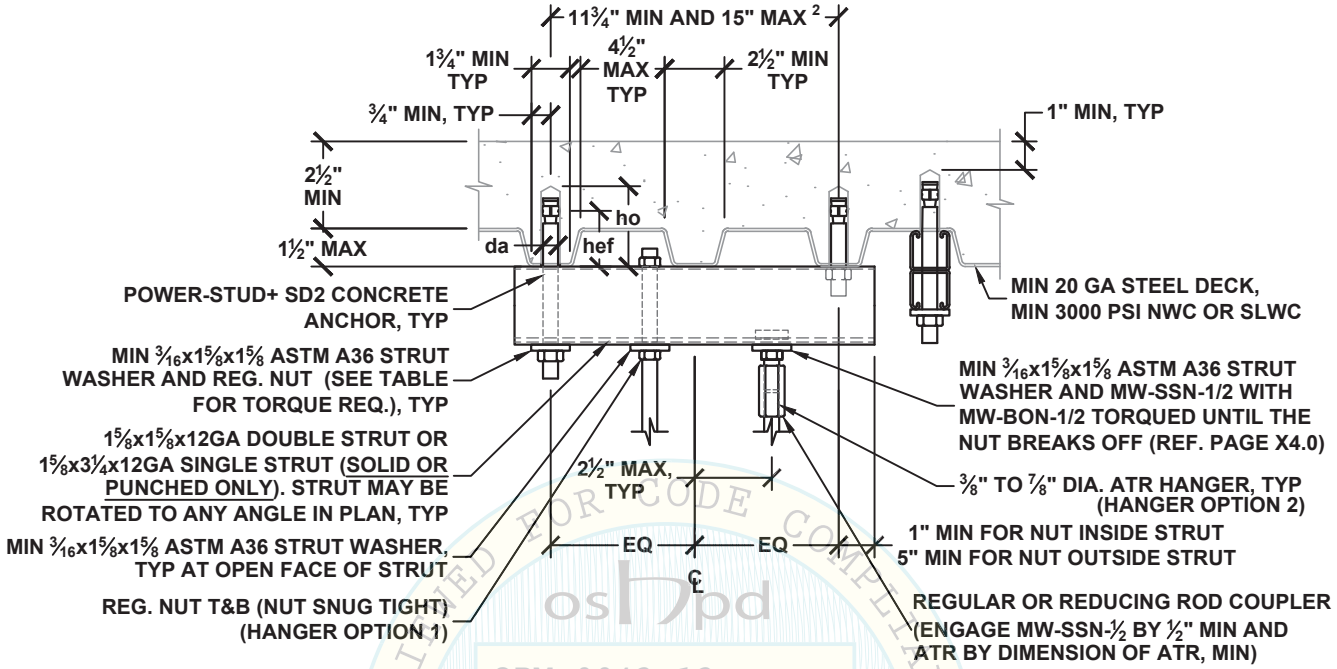

HANGER ATTACHMENT TYPE	STEEL COMPONENT ALLOWABLE VERTICAL LOAD Ta LBS	HANGER ATTACHMENT TYPE	CONCRETE ANCHOR ALLOWABLE VERTICAL LOAD Tac [1] LBS	ATR HANGER DIA. INCH	POWER-STUD+ SD2 CONCRETE ANCHOR (ICC ESR-2502) SPECIAL INSPECTION REQ'D					
					DIA. da INCH	MIN EFF. EMBED. hef INCH	MIN HOLE DEPTH ho INCH	MIN SPACING Smin INCH	MIN END DIST. Cmin INCH	TORQUE REQ'D FT-LBS
38A TO 38N	2400	38A TO 38H	720	⅜	⅜	2	2⅝	6	3	20
50A TO 50P	2620	50A TO 50H	720	½						
63A TO 63P	2620	63A TO 63H	720	⅝						
75A TO 75P	2620	75A TO 75H	720	¾						
88A TO 88P	2620	88A TO 88H	720	⅞						
38A TO 38N	2400	38A TO 38H	830	⅜	½	2	2¾	6	3	40
50A TO 50P	2620	50A TO 50H	830	½						
63A TO 63P	2620	63A TO 63H	830	⅝						
75A TO 75P	2620	75A TO 75H	830	¾						
88A TO 88P	2620	88A TO 88H	830	⅞						

SEE DETAIL M0.00 FOR SECTION NOTES

[1] ALLOWABLE LOADS HAVE BEEN INCREASED BY A FACTOR OF 1.2 FOR LOAD COMBINATIONS INCLUDING OVERSTRENGTH, Ω_0, PER ASCE 7-10 SEC. 12.14.3.2.3.

[2] WHEN THE BOLT CENTERLINE DISTANCE EXCEEDS 12¼", THE STRUT MUST BE ROTATED TO COMPLY TO THE DETAIL.

MASON WEST, INC.
1601 E. Miraloma Ave. Placentia, CA 92870
TEL (714) 630 - 0701, www.masonwest.com

Jiefu "Jeff" Zhang, SE
California SE No. S5270

PAGE
M2.63

OPM-0043-13
BY: Jeffrey Y. Kikumoto
06/23/2016
REVIEWED FOR CODE COMPLIANCE
CALIFORNIA BUILDING CODE

HANGER ATTACHMENT
TO CONCRETE FILLED METAL DECK
WITH (2) POWER-STUD+ SD2 CONCRETE ANCHORS

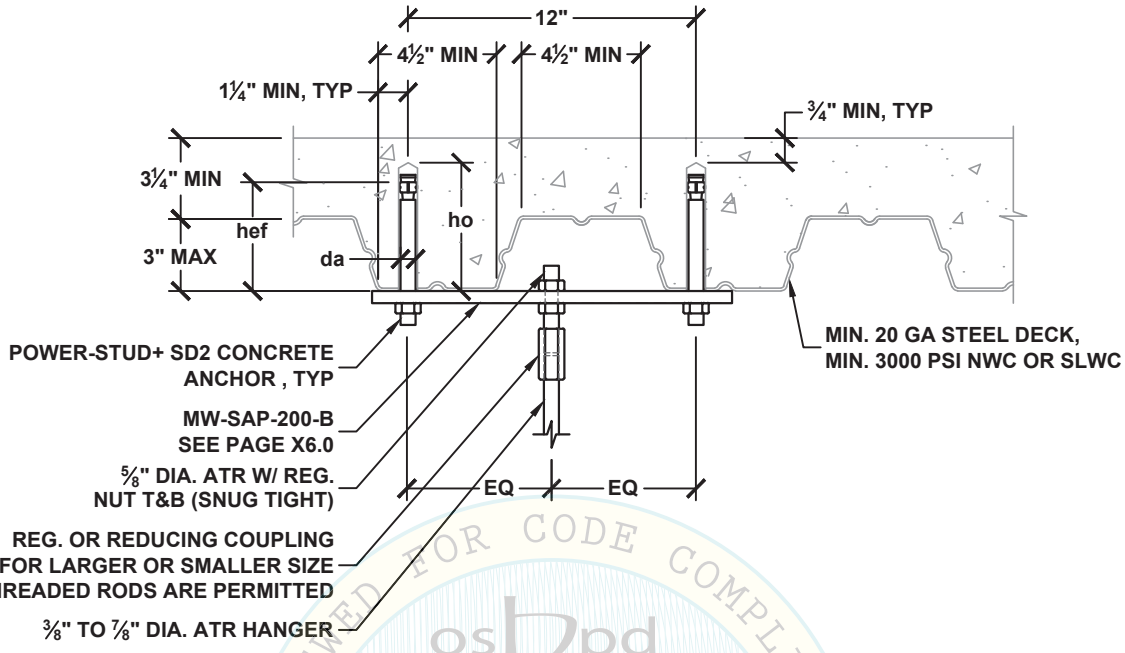

REVIEWED FOR CODE COMPLIANCE
CALIFORNIA BUILDING STANDARDS COMMISSION
oshpd
OPM-0043-13
BY: Jeffrey Y. Kikumoto
DATE: 06/23/2016

HANGER ATTACHMENT TYPE	STEEL COMPONENT ALLOWABLE VERTICAL LOAD Ta LBS	HANGER ATTACHMENT TYPE	CONCRETE ANCHOR ALLOWABLE VERTICAL LOAD Tac [1] LBS	ATR HANGER DIA. INCH	POWER-STUD+ SD2 CONCRETE ANCHOR (ICC ESR-2502) SPECIAL INSPECTION REQ'D					
					DIA. da INCH	MIN EFF. EMBED. hef INCH	MIN HOLE DEPTH ho INCH	MIN SPACING Smin INCH	MIN END DIST. Cmin INCH	TORQUE REQ'D FT-LBS
38A TO 38M	1930	38A TO 38P	2700	⅜	⅝	3¼	4¼	MAX OF: 3*hef OR 1.5*FLUTE WIDTH	4⅞	60
50A TO 50M	1930	50A TO 50P	2700	½						
63A TO 63M	1930	63A TO 63P	2700	⅝						
75A TO 75M	1930	75A TO 75P	2700	¾						
88A TO 88M	1930	88A TO 88P	2700	⅞						

SEE DETAIL M0.00 GOR SECTION NOTES

[1] ALLOWABLE LOADS HAVE BEEN INCREASED BY A FACTOR OF 1.2 FOR LOAD COMBINATIONS INCLUDING OVERSTRENGTH, Ω_0, PER ASCE 7-10 SEC. 12.14.3.2.3.

MASON WEST, INC.
1601 E. Miraloma Ave. Placentia, CA 92870
TEL (714) 630 - 0701, www.masonwest.com

Jiefu "Jeff" Zhang, SE
California SE No. S5270

PAGE
M2.64

HANGER ATTACHMENT
TO CONCRETE FILLED METAL DECK
WITH (4) POWER-STUD+ SD2 CONCRETE ANCHORS

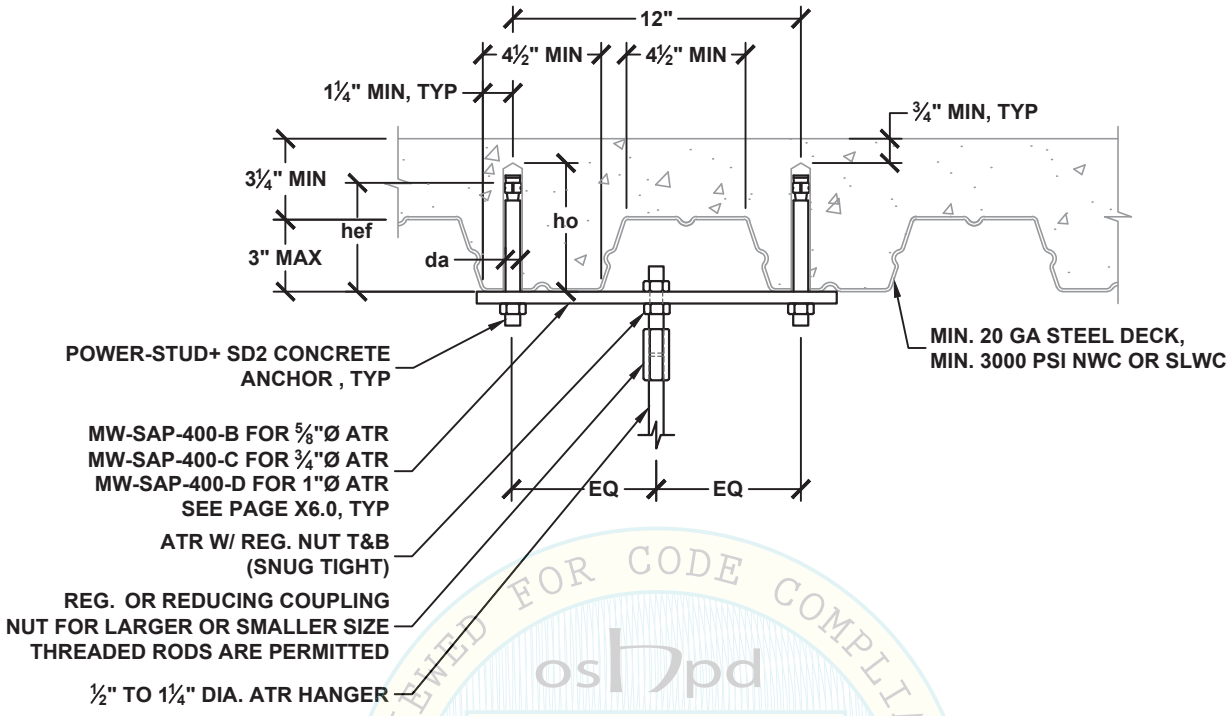

REVIEWED FOR CODE COMPLIANCE
CALIFORNIA BUILDING CODE, 2013
oshpd
OPM-0043-13
BY: Jeffrey Y. Kikumoto
DATE: 06/23/2016

HANGER ATTACHMENT TYPE	STEEL COMPONENT ALLOWABLE VERTICAL LOAD Ta LBS	HANGER ATTACHMENT TYPE	CONCRETE ANCHOR ALLOWABLE VERTICAL LOAD Tac [1] LBS	ATR HANGER DIA. INCH	POWER-STUD+ SD2 CONCRETE ANCHOR (ICC ESR-2502) SPECIAL INSPECTION REQ'D					
					DIA. da INCH	MIN EFF. EMBED. hef INCH	MIN HOLE DEPTH ho INCH	MIN SPACING Smin INCH	MIN END DIST. Cmin INCH	TORQUE REQ'D FT-LBS
50A TO 50Q	3600	50A TO 50R	5400	½	⅝	3¼	4¼	MAX OF: 3*hef OR 1.5*FLUTE WIDTH	4⅞	60
63A TO 63Q	3600	63A TO 63R	5400	⅝						
75A TO 75Q	3500	75A TO 75R	5400	¾						
88A TO 88Q	3500	88A TO 88R	5400	⅞						
100A TO 100Q	3500	100A TO 100R	5400	1						
125A TO 125Q	3500	125A TO 125R	5400	1¼						

SEE DETAIL M0.00 GOR SECTION NOTES

[1] ALLOWABLE LOADS HAVE BEEN INCREASED BY A FACTOR OF 1.2 FOR LOAD COMBINATIONS INCLUDING OVERSTRENGTH, Ω_0, PER ASCE 7-10 SEC. 12.14.3.2.3.

MASON WEST, INC.
1601 E. Miraloma Ave. Placentia, CA 92870
TEL (714) 630 - 0701, www.masonwest.com

Jiefu "Jeff" Zhang, SE
California SE No. S5270

PAGE
M2.65

HANGER ATTACHMENT
TO STEEL BEAM OR OPEN WEB STEEL TRUSS WITH SELF-DRILLING SELF-TAPPING METAL SCREWS

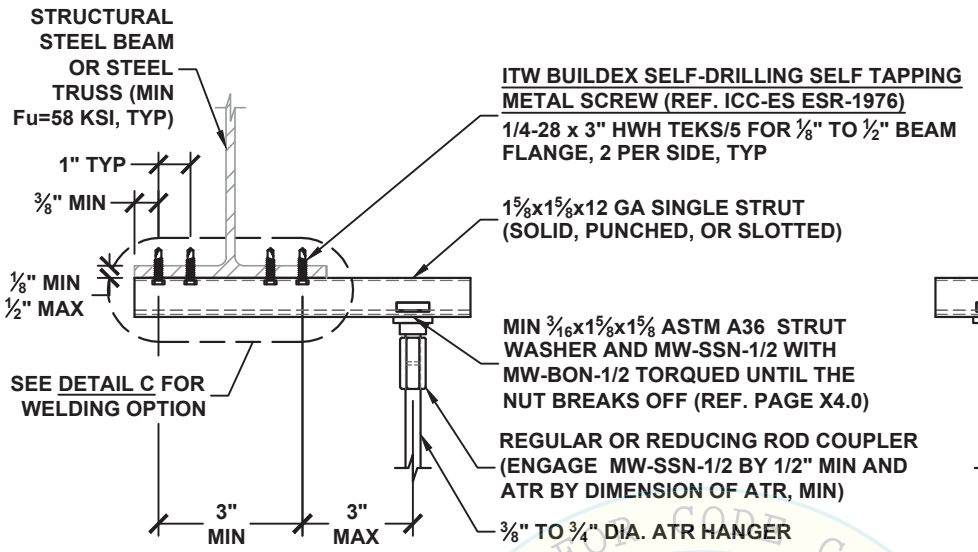

DETAIL A

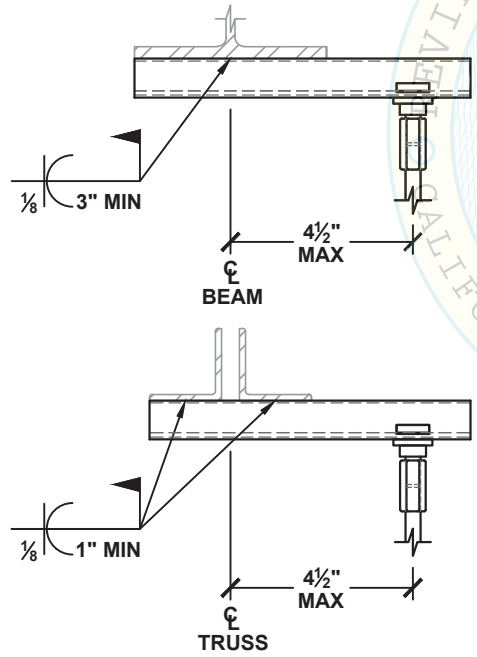

DETAIL C
WELDING OPTION

NOTE: ALL WELDS TO BE MINIMUM 70xx ELECTRODE WELDS

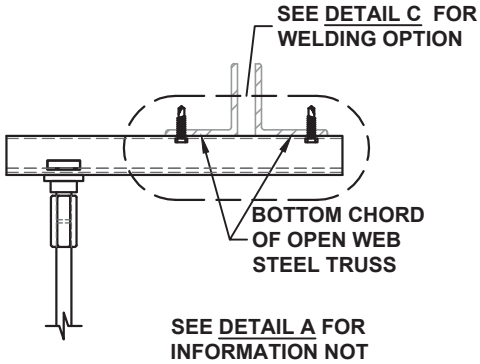

SEE DETAIL A FOR INFORMATION NOT SHOWN IN THIS DETAIL

DETAIL B

HANGER ATTACHMENT TYPE	ALLOWABLE VERTICAL LOAD LBS	ATR HANGER DIA. INCH
38A TO 38F	510	3/8
50A TO 50F	510	1/2
63A TO 63F	510	5/8
75A TO 75F	510	3/4

1 SEE DETAIL M0.00 FOR SECTION NOTES
2 ATTACHMENT TO STEEL BEAM SHALL NOT BE PLACED WITHIN THE PROTECTED ZONE AS DEFINED IN AISC 341.

REVIEWED FOR CODE COMPLIANCE CALIFORNIA BUILDING STANDARDS
osHpd
OPM-0043-13
BY: Jeffrey
DATE: 06/2

MASON WEST, INC.
1601 E. Miraloma Ave. Placentia, CA 92870
TEL (714) 630 - 0701, www.masonwest.com

Jiefu "Jeff" Zhang, SE
California SE No. S5270

PAGE
M3.10

HANGER ATTACHMENT
TO STEEL BEAM OR OPEN WEB STEEL TRUSS WITH SELF-DRILLING SELF-TAPPING METAL SCREWS

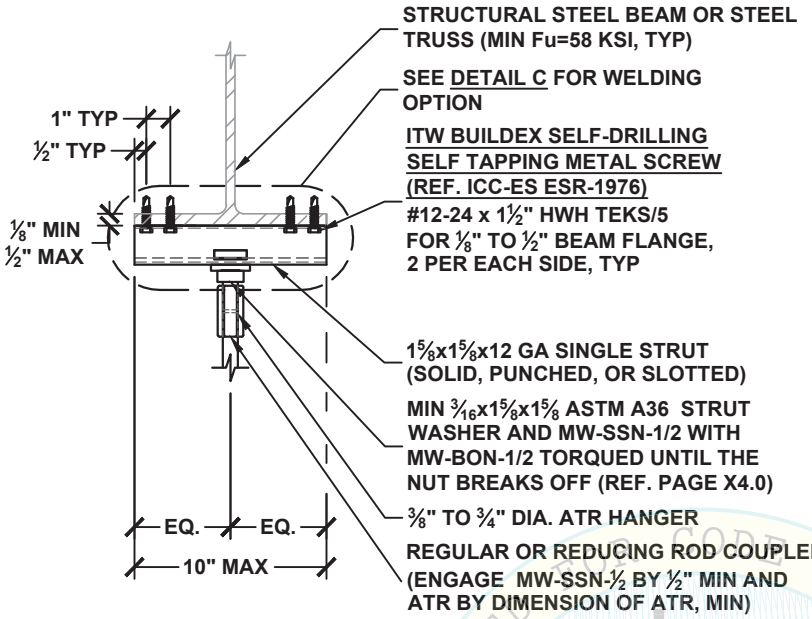

DETAIL A

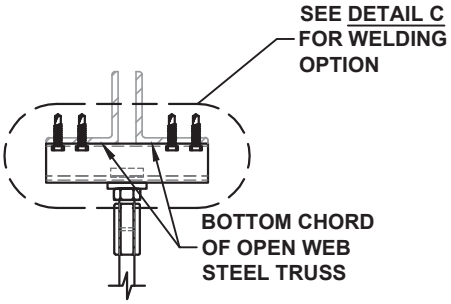

SEE DETAIL A FOR INFORMATION NOT SHOWN IN THIS DETAIL

DETAIL B

HANGER ATTACHMENT TYPE	ALLOWABLE VERTICAL LOAD LBS	ATR HANGER DIA. INCH
38A TO 38M	1700	⅜
50A TO 50M	1700	½
63A TO 63M	1700	⅝
75A TO 75M	1700	¾

1 SEE DETAIL M0.00 FOR SECTION NOTES
2 ATTACHMENT TO STEEL BEAM SHALL NOT BE PLACED WITHIN THE PROTECTED ZONE AS DEFINED IN AISC 341.

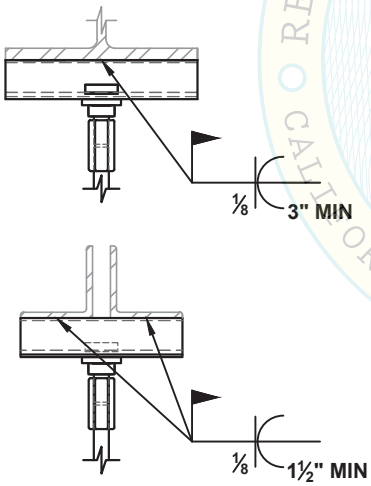

DETAIL C
WELDING OPTION

NOTE: ALL WELDS TO BE MINIMUM 70xx ELECTRODE WELDS

osDpd
OPM-0043-13
BY: Jeffrey Kikumoto
DATE: 06/23/2016
REVIEWED FOR CODE COMPLIANCE
CALIFORNIA BUILDING STANDARDS COMMISSION

MASON WEST, INC.
1601 E. Miraloma Ave. Placentia, CA 92870
TEL (714) 630 - 0701, www.masonwest.com

Jiefu "Jeff" Zhang, SE
California SE No. S5270

PAGE
M3.11

ATR HANGER ATTACHMENT
TO STEEL BEAM
WITH WELDED BEAM ATTACHMENT

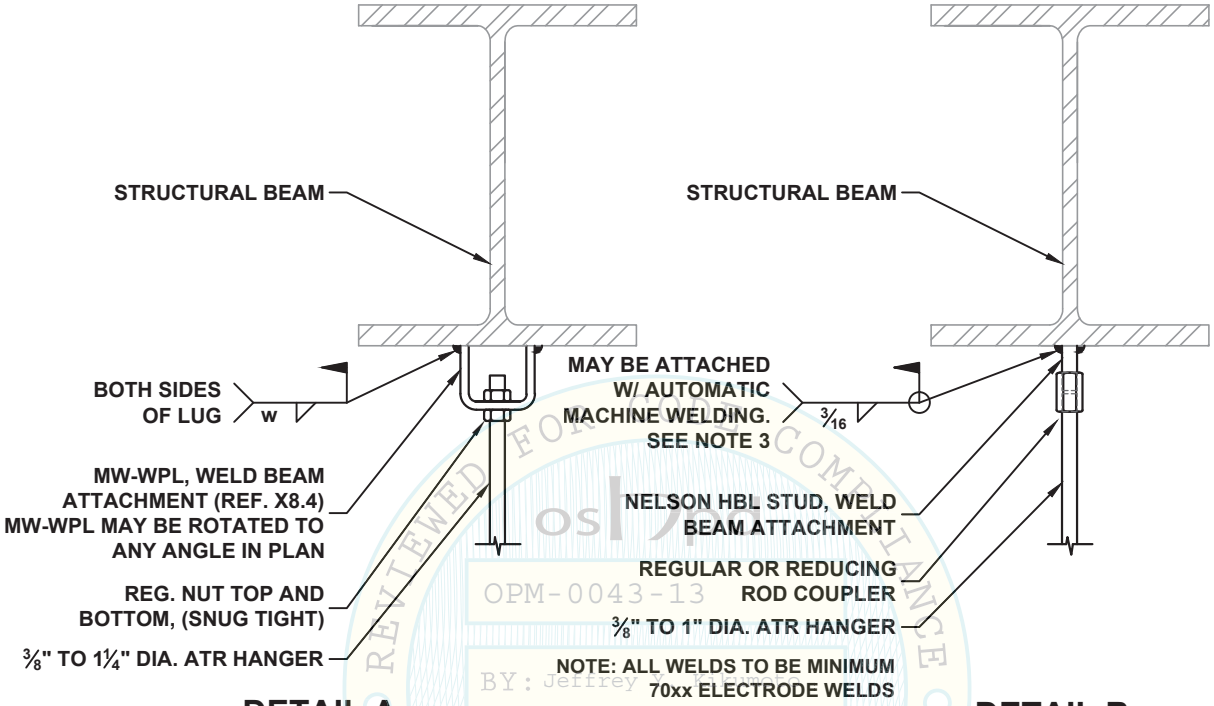

DETAIL A

DETAIL B

HANGER ATTACHMENT TYPE	DETAIL A		DETAIL B	ALLOWABLE VERTICAL LOAD LBS	ATR HANGER DIA. INCH
	MW-WPL LUG	w, WELD SIZE INCH	NELSON HBL STUD DIA. INCH		
38A TO 38H	MW-WPL-38	⅛	⅜	720	⅜
50A TO 50L	MW-WPL-50	3/16	½	1320	½
63A TO 63P	MW-WPL-63	3/16	⅝	2880	⅝
75A TO 75Q	MW-WPL-75	¼	¾	4800	¾
75A TO 75S	MW-WPL-75A	5/16	N/A	8000	¾
88A TO 88R	MW-WPL-88	5/16	⅞	6900	⅞
100A TO 100S	MW-WPL-100	5/16	1	8660	1
125A TO 125T	MW-WPL-125	5/16	N/A	11400	1¼

1 SEE DETAIL M0.00 FOR SECTION NOTES
2 WELDED ATTACHMENT TO STEEL BEAM SHALL NOT BE PLACED WITHIN THE PROTECTED ZONE AS DEFINED IN AISC 341.
3 AUTOMATIC MACHINE WELDING OF NELSON HBL STUD SHALL COMPLY WITH AWS D1.1, SECTION 6: STUD WELDING.
4 NELSON HBL STUD TO BE MINIMUM 61KSI TENSILE STRENGTH MILD STEEL CONFORMING TO ASTM A108.

REVIEWED FOR CODE COMPLIANCE
OSHPD
OPM-0043-13
BY: Jeffrey Kikumoto
DATE: 06/23/2016
CALIFORNIA BUILDING CODE 2013

MASON WEST, INC.
1601 E. Miraloma Ave. Placentia, CA 92870
TEL (714) 630 - 0701, www.masonwest.com

Jiefu "Jeff" Zhang, SE
California SE No. S5270

PAGE
M3.12

ATR HANGER ATTACHMENT TO OPEN WEB STEEL TRUSS

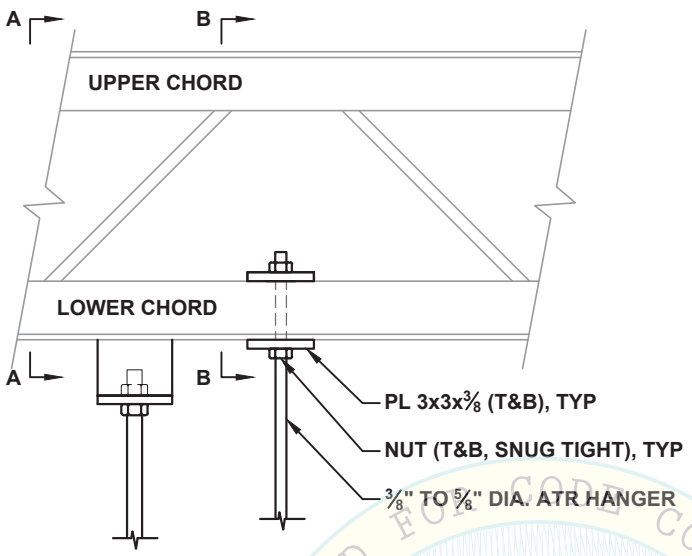

OPTION 1 OPTION 2

ELEVATION VIEW

VIEW B-B

REVIEWED FOR CODE COMPLIANCE
CALIFORNIA BUILDING CODE
oshpd
OPM-0043-13
BY: Jeffrey Y. Kikumoto
DATE: 06/23/2016

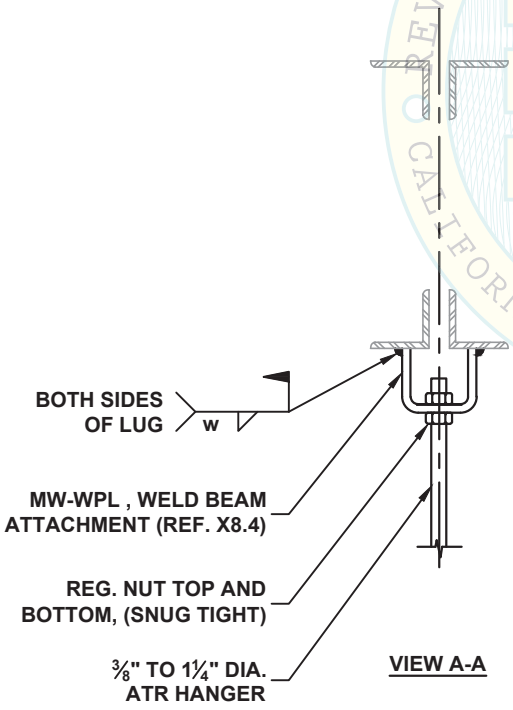

VIEW A-A

HANGER ATTACHMENT TYPE	OPTION 1 PLATES	OPTION 2 MW-WPL LUG	OPTION 2 w, WELD SIZE INCH	ALLOWABLE VERTICAL LOAD LBS	ATR HANGER DIA. INCH
38A TO 38H	(2) PL3x3x3/8	MW-WPL-38	1/8	720	3/8
50A TO 50L		MW-WPL-50	3/16	1320	1/2
63A TO 63P		MW-WPL-63	3/16	2880	5/8
75A TO 75Q	N/A	MW-WPL-75	1/4	4800	3/4
75A TO 75S	N/A	MW-WPL-75A	5/16	8000	3/4
88A TO 88R	N/A	MW-WPL-88	5/16	6900	7/8
100A TO 100S	N/A	MW-WPL-100	5/16	8880	1
125A TO 125T	N/A	MW-WPL-125	5/16	11400	1¼

1 SEE DETAIL M0.00 FOR SECTION NOTES
2 WELDED ATTACHMENT TO STEEL BEAM SHALL NOT BE PLACED WITHIN THE PROTECTED ZONE AS DEFINED IN AISC 341.

MASON WEST, INC.
1601 E. Miraloma Ave. Placentia, CA 92870
TEL (714) 630 - 0701, www.masonwest.com

Jiefu "Jeff" Zhang, SE
California SE No. S5270

PAGE
M3.13

ATR HANGER ATTACHMENT TO STEEL BEAM WITH STEEL BEAM CLAMPS

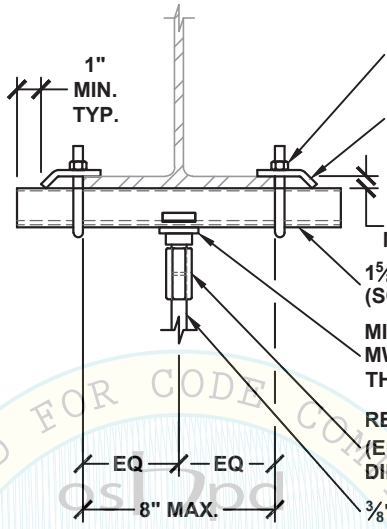

REVIEWED FOR CODE COMPLIANCE
CALIFORNIA BUILDING CODE, 2013
OSHPD
OPM-0043-13
BY: Jeffrey Y. Kikumoto
06/23/2016

HANGER CONNECTION TYPE	ALLOWABLE VERTICAL LOAD LBS	ATR HANGER DIA. INCH
38A TO 38N	2000	3/8
50A TO 50N	2000	1/2
63A TO 63N	2000	5/8
75A TO 75N	2000	3/4

1 SEE DETAIL M0.00 FOR SECTION NOTES
2 ATTACHMENT TO STEEL BEAM SHALL NOT BE PLACED WITHIN THE PROTECTED ZONE AS DEFINED IN AISC 341.

MASON WEST, INC.
1601 E. Miraloma Ave. Placentia, CA 92870
TEL (714) 630 - 0701, www.masonwest.com

Jiefu "Jeff" Zhang, SE
California SE No. S5270

PAGE
M3.14

HANGER ATTACHMENT TO WOOD JOIST

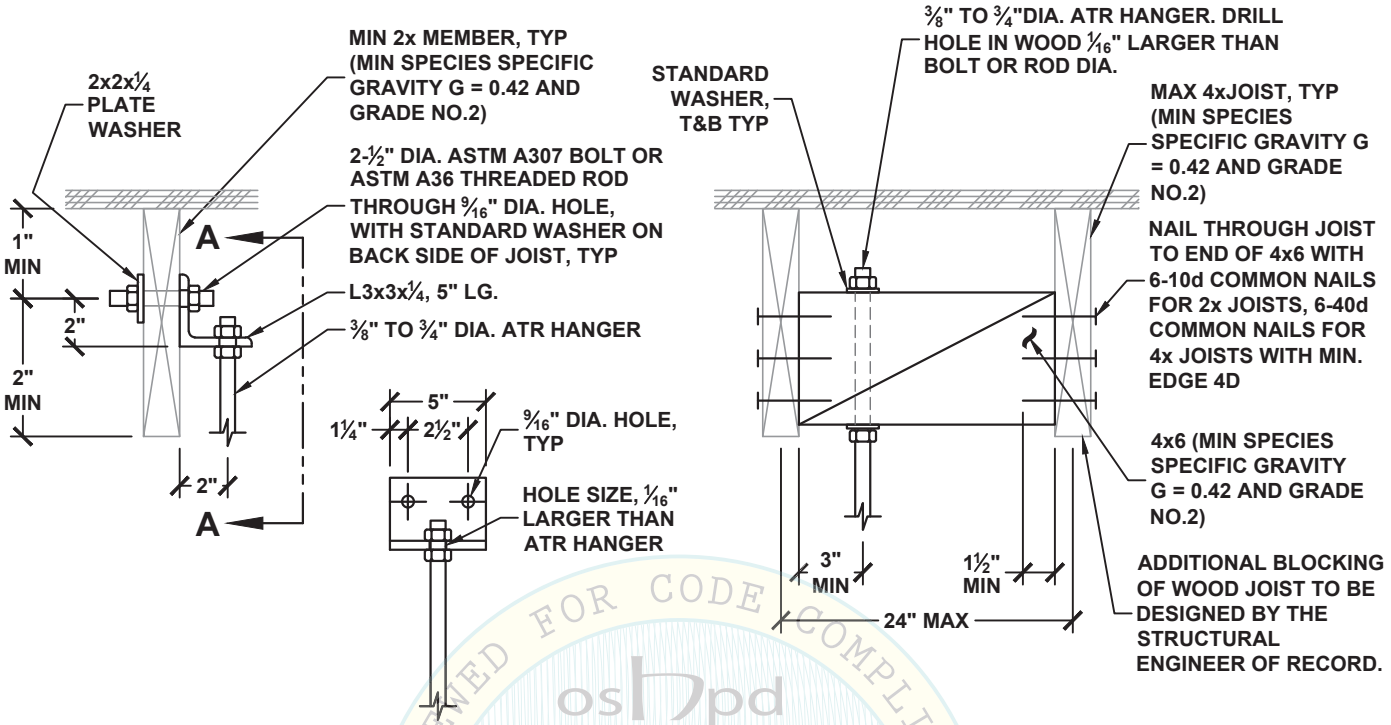

VIEW A-A

AT JOIST **IN-BETWEEN JOISTS**

HANGER ATTACHMENT TYPE	ALLOWABLE VERTICAL LOAD LBS	ATR HANGER DIA. INCH
38A TO 38E	420	⅜
50A TO 50E	420	½
63A TO 63E	420	⅝
75A TO 75E	420	¾

SEE DETAIL M0.00 FOR SECTION NOTES

REVIEWED FOR CODE COMPLIANCE
CALIFORNIA BUILDING CODE, 2013
oshpd
OPM-0043-13
BY: Jeffrey Y. Kikumoto
DATE 06/23/2016

MASON WEST, INC.
1601 E. Miraloma Ave. Placentia, CA 92870
TEL (714) 630 - 0701, www.masonwest.com

Jiefu "Jeff" Zhang, SE
California SE No. S5270

PAGE
M4.10

HANGER ATTACHMENT TO WOOD I-JOISTS

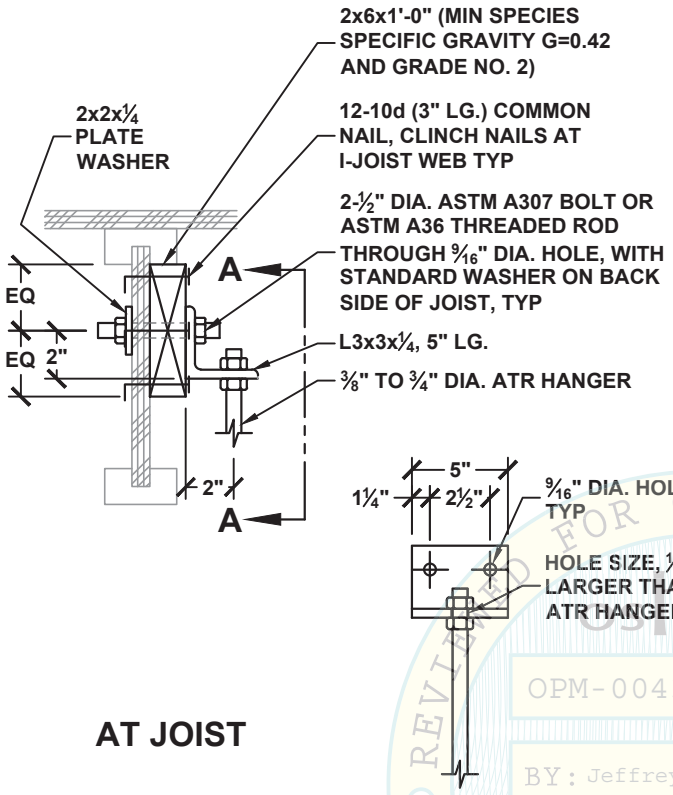

AT JOIST

VIEW A-A

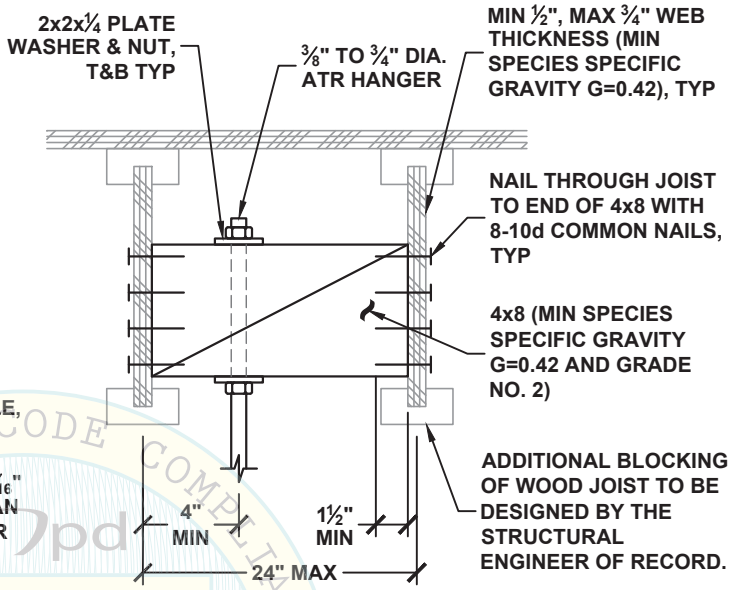

IN-BETWEEN JOISTS

HANGER ATTACHMENT TYPE	ALLOWABLE VERTICAL LOAD LBS	ATR HANGER DIA. INCH
38A TO 38E	360	⅜
50A TO 50E	360	½
63A TO 63E	360	⅝
75A TO 75E	360	¾

SEE DETAIL M0.00 FOR SECTION NOTES

REVIEWED FOR CODE COMPLIANCE
CALIFORNIA BUILDING CODE, 2013
OSHPD
OPM-0043-13
BY: Jeffrey Y. Kikumoto
DATE: 06/23/2016

MASON WEST, INC.
1601 E. Miraloma Ave. Placentia, CA 92870
TEL (714) 630 - 0701, www.masonwest.com

Jiefu "Jeff" Zhang, SE
California SE No. S5270

PAGE
M4.11

HANGER ATTACHMENT TO WOOD I-JOISTS

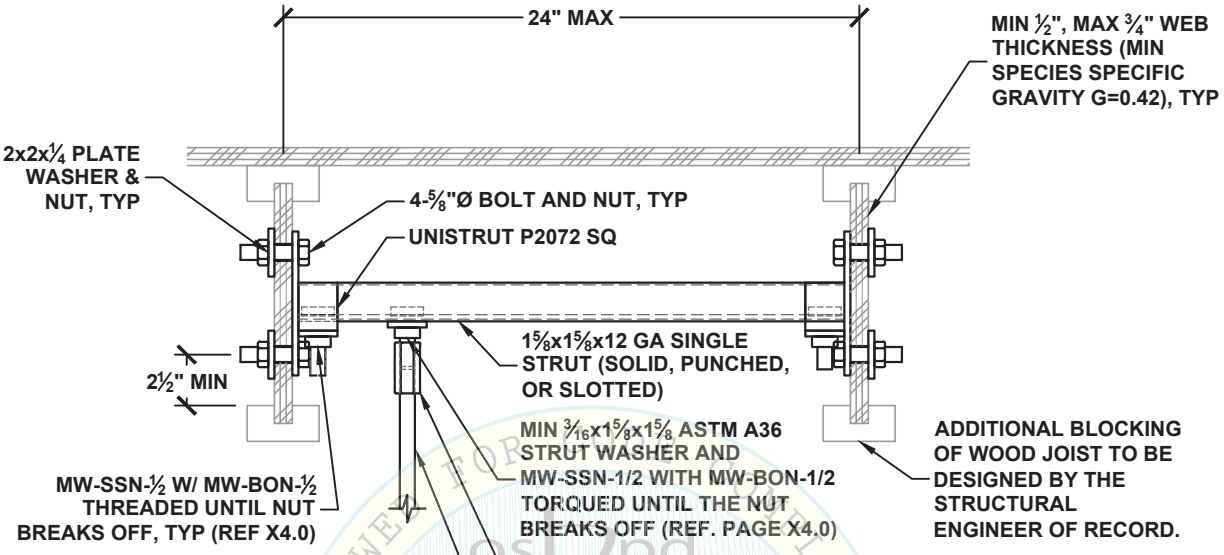

REVIEWED FOR CODE COMPLIANCE
OSHPD
OPM-0043-13
BY: Jeffrey Y. Kikumoto
DATE: 06/23/2016
CALIFORNIA BUILDING CODE, 2013

HANGER ATTACHMENT TYPE	ALLOWABLE VERTICAL LOAD LBS	ATR HANGER DIA. INCH
38A TO 38H	710	⅜
50A TO 50H	710	½
63A TO 63H	710	⅝
75A TO 75H	710	¾

SEE DETAIL M0.00 FOR SECTION NOTES

MASON WEST, INC.
1601 E. Miraloma Ave. Placentia, CA 92870
TEL (714) 630 - 0701, www.masonwest.com

Jiefu "Jeff" Zhang, SE
California SE No. S5270

PAGE
M4.12

HANGER ATTACHMENT
TO FULLY GROUTED CMU WALL WITH
HILTI KB-3 CONCRETE ANCHOR

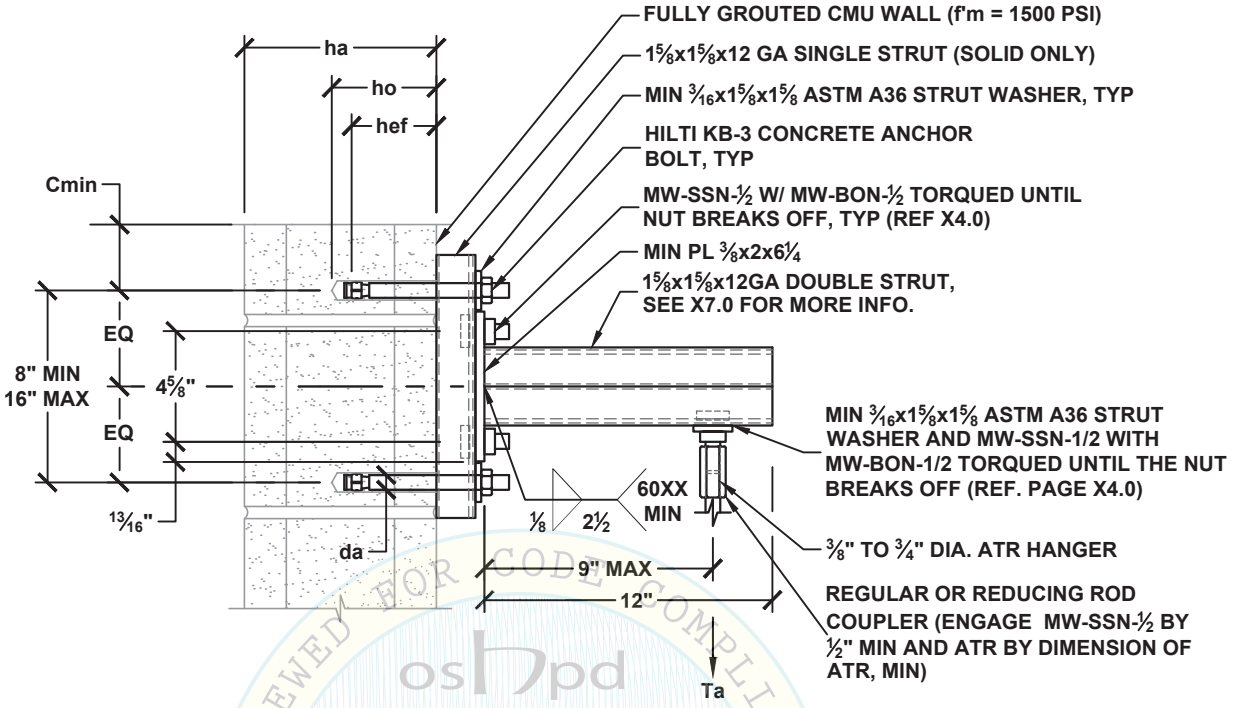

REVIEWED FOR CODE COMPLIANCE
OSHPD
OPM-0043-13
BY: Jeffrey Y. Kikumoto
DATE: 06/23/2016
CALIFORNIA BUILDING CODE 2013

NOTE:

WHEN USING HILTI KB-3 CONCRETE ANCHOR ATTACHMENT TO CMU WALL, THE STRUCTURAL ENGINEER OF RECORD (SEOR) SHALL VERIFY:

(1) MASONRY IS NOT CRACKED AS DEFINED IN ICC-ES AC01 SECTION 2.3; CALCULATION REQUIRED TO SHOW MASONRY WALL WOULD NOT CRACK UNDER THE DESIGN EARTHQUAKE LOADS UNDER ALL SERVICE LOAD CONDITIONS; WALL HAS TO REMAIN ELASTIC.

(2) MASONRY WALL SHALL BE FULLY GROUTED IN ACCORDANCE WITH ESR-1385 SECTION 3.2.

(3) CONDITION OF USE REQUIREMENTS IN ACCORDANCE WITH ESR-1385 SECTION 5.0 IS SATISFIED.

HANGER ATTACHMENT TYPE	STEEL COMPONENT ALLOWABLE VERTICAL LOAD Ta LBS	HANGER ATTACHMENT TYPE	CONCRETE ANCHOR ALLOWABLE VERTICAL LOAD Tac [3] LBS	ATR HANGER DIA. INCH	HILTI KB-3 CONCRETE ANCHOR (ICC ESR-1385) SPECIAL INSPECTION REQ'D						
					DIA. da INCH	MIN EFF. EMBED. hef INCH	MIN HOLE DEPTH ho INCH	MIN BASE TH. ha INCH	MIN EDGE Cmin INCH	MIN SPACING Smin INCH	TORQUE REQ'D FT-LBS
38A TO 38E	370	38A TO 38G	640	⅜	½	3½	4 1/16	5¼	12	8	25
50A TO 50E	370	50A TO 50G	640	½							
63A TO 63E	370	63A TO 63G	640	⅝							
75A TO 75E	370	75A TO 75G	640	¾							

[1] SEE M0.00 FOR SECTION NOTES

[2] HILTI KB-3 MASONRY ANCHOR MUST BE INSTALLED IN THE FACE OF CMU SHELLS A MINIMUM OF 1⅜" FROM ANY VERTICAL MORTAR JOINT AND LIMITED TO ONE ANCHOR PER CELL.

[3] ALLOWABLE LOADS HAVE BEEN INCREASED BY A FACTOR OF 1.2 FOR LOAD COMBINATIONS INCLUDING OVERSTRENGTH, Ω_0, PER ASCE 7-10 SEC. 12.14.3.2.3.

MASON WEST, INC.
1601 E. Miraloma Ave. Placentia, CA 92870
TEL (714) 630 - 0701, www.masonwest.com

Jiefu "Jeff" Zhang, SE
California SE No. S5270

PAGE
M5.10

ANGLE CLIP ATTACHMENT TO FULLY GROUTED CMU WALL WITH HILTI KB-3 CONCRETE ANCHOR

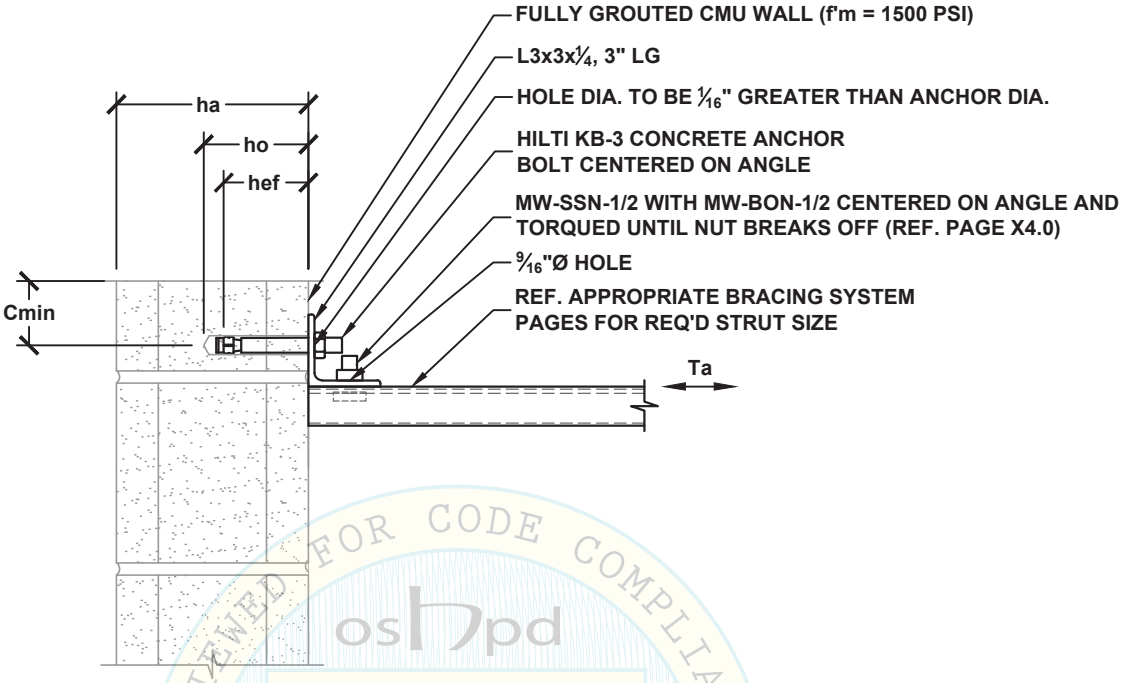

OPM-0043-13
BY: Jeffrey Y. Kikumoto

NOTE:

WHEN USING HILTI KB-3 CONCRETE ANCHOR ATTACHMENT TO CMU WALL, THE STRUCTURAL ENGINEER OF RECORD (SEOR) SHALL VERIFY:

(1) MASONRY IS NOT CRACKED AS DEFINED IN ICC-ES AC01 SECTION 2.3; CALCULATION REQUIRED TO SHOW MASONRY WALL WOULD NOT CRACK UNDER THE DESIGN EARTHQUAKE LOADS UNDER ALL SERVICE LOAD CONDITIONS; WALL HAS TO REMAIN ELASTIC.

(2) MASONRY WALL SHALL BE FULLY GROUTED IN ACCORDANCE WITH ESR-1385 SECTION 3.2.

(3) CONDITION OF USE REQUIREMENTS IN ACCORDANCE WITH ESR-1385 SECTION 5.0 IS SATISFIED.

HANGER ATTACHMENT TYPE	STEEL COMPONENT ALLOWABLE TENSION LOAD Ta LBS	HANGER ATTACHMENT TYPE	CONCRETE ANCHOR ALLOWABLE TENSION LOAD Tac [3] LBS	HILTI KB-3 CONCRETE ANCHOR (ICC ESR-1385) SPECIAL INSPECTION REQ'D						
				DIA. da INCH	MIN EFF. EMBED. hef INCH	MIN HOLE DEPTH ho INCH	MIN BASE TH. ha INCH	MIN EDGE Cmin INCH	MIN SPACING Smin INCH	TORQUE REQ'D FT-LBS
50A TO 50G	670	50A TO 50J	870	½	3½	4 1/16	5¼	12	8	25

[1] SEE M0.00 FOR SECTION NOTES

[2] HILTI KB-3 MASONRY ANCHOR MUST BE INSTALLED IN THE FACE OF CMU SHELLS A MINIMUM OF 1⅜" FROM ANY VERTICAL MORTAR JOINT AND LIMITED TO ONE ANCHOR PER CELL.

[3] ALLOWABLE LOADS HAVE BEEN INCREASED BY A FACTOR OF 1.2 FOR LOAD COMBINATIONS INCLUDING OVERSTRENGTH, Ω_0, PER ASCE 7-10 SEC. 12.14.3.2.3.

MASON WEST, INC.
1601 E. Miraloma Ave. Placentia, CA 92870
TEL (714) 630 - 0701, www.masonwest.com

Jiefu "Jeff" Zhang, SE
California SE No. S5270

PAGE
M5.11

ANGLE CLIP ATTACHMENT TO FULLY GROUTED CMU WALL WITH HILTI KB-3 CONCRETE ANCHOR

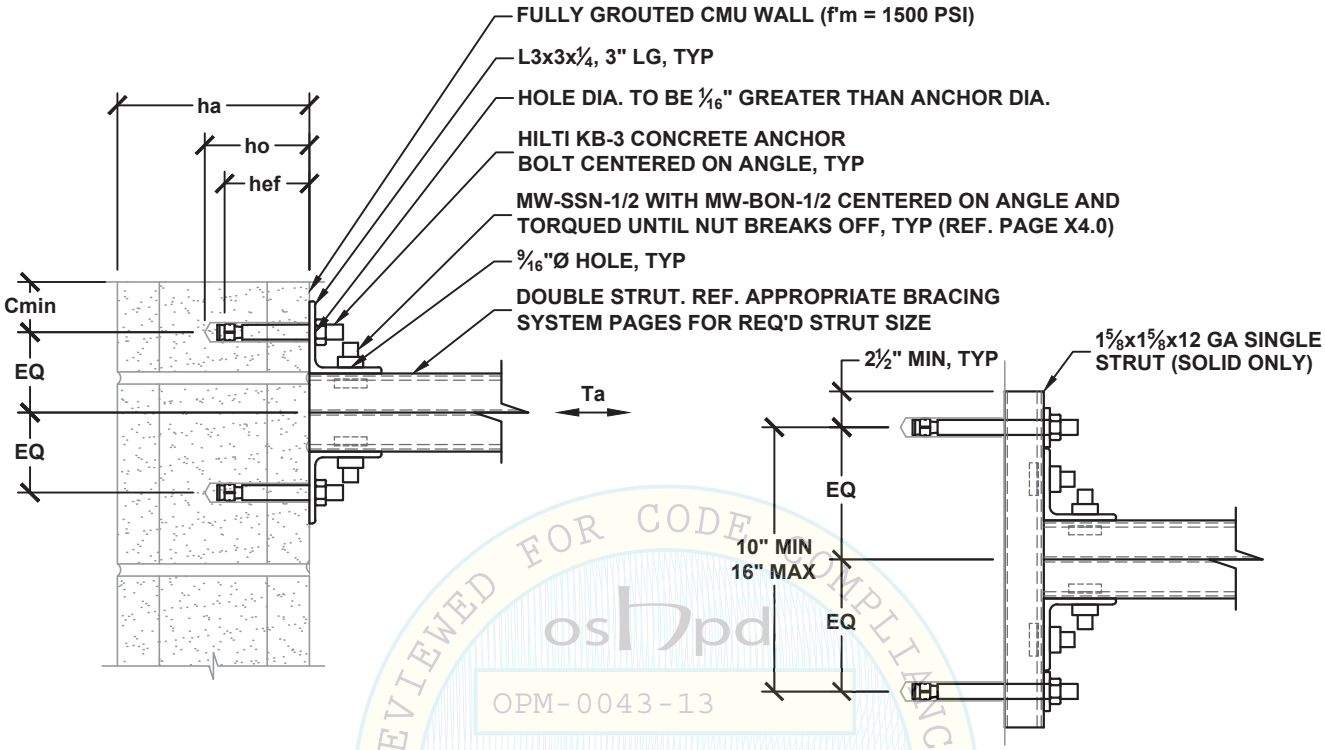

NOTE: **ALTERNATE INSTALL**

WHEN USING HILTI KB-3 CONCRETE ANCHOR ATTACHMENT TO CMU WALL, THE STRUCTURAL ENGINEER OF RECORD (SEOR) SHALL VERIFY:

(1) MASONRY IS NOT CRACKED AS DEFINED IN ICC-ES AC01 SECTION 2.3; CALCULATION REQUIRED TO SHOW MASONRY WALL WOULD NOT CRACK UNDER THE DESIGN EARTHQUAKE LOADS UNDER ALL SERVICE LOAD CONDITIONS; WALL HAS TO REMAIN ELASTIC.

(2) MASONRY WALL SHALL BE FULLY GROUTED IN ACCORDANCE WITH ESR-1385 SECTION 3.2.

(3) CONDITION OF USE REQUIREMENTS IN ACCORDANCE WITH ESR-1385 SECTION 5.0 IS SATISFIED.

HANGER ATTACHMENT TYPE	STEEL COMPONENT ALLOWABLE TENSION LOAD Ta LBS	HANGER ATTACHMENT TYPE	CONCRETE ANCHOR ALLOWABLE TENSION LOAD Tac [3] LBS	HILTI KB-3 CONCRETE ANCHOR (ICC ESR-1385) SPECIAL INSPECTION REQ'D						
				DIA. da INCH	MIN EFF. EMBED. hef INCH	MIN HOLE DEPTH ho INCH	MIN BASE TH. ha INCH	MIN EDGE Cmin INCH	MIN SPACING Smin INCH	TORQUE REQ'D FT-LBS
50A TO 50L	1350	50A TO 50M	1740	½	3½	4 1/16	5¼	12	8	25

[1] SEE M0.00 FOR SECTION NOTES

[2] HILTI KB-3 MASONRY ANCHOR MUST BE INSTALLED IN THE FACE OF CMU SHELLS A MINIMUM OF 1⅜" FROM ANY VERTICAL MORTAR JOINT AND LIMITED TO ONE ANCHOR PER CELL.

[3] ALLOWABLE LOADS HAVE BEEN INCREASED BY A FACTOR OF 1.2 FOR LOAD COMBINATIONS INCLUDING OVERSTRENGTH, Ω_0, PER ASCE 7-10 SEC. 12.14.3.2.3.

MASON WEST, INC.
1601 E. Miraloma Ave. Placentia, CA 92870
TEL (714) 630 - 0701, www.masonwest.com

Jiefu "Jeff" Zhang, SE
California SE No. S5270

PAGE **M5.12**

REVIEWED FOR CODE COMPLIANCE CALIFORNIA BUILDING CODE, 2013
osHpd
OPM-0043-13
BY: Jeffrey Y. Kikumoto

HANGER ATTACHMENT
TO FULL HEIGHT METAL STUD WALL

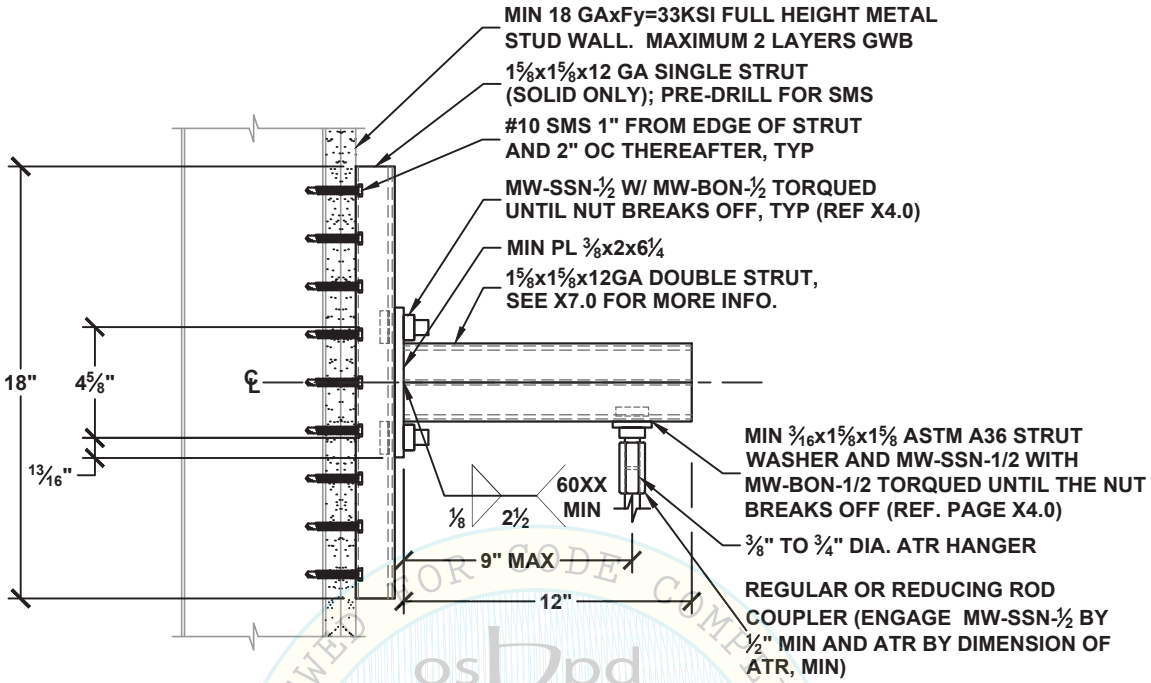

HANGER ATTACHMENT TYPE	ALLOWABLE VERTICAL LOAD LBS	ATR HANGER DIA. INCH
38A TO 38C	200	⅜
50A TO 50C	200	½
63A TO 63C	200	⅝
75A TO 75C	200	¾

SEE DETAIL M0.00 FOR SECTION NOTES

OSHPD
OPM-0043-13
BY: Jeffrey Y. Kikumoto
DATE: 06/23/2016
REVIEWED FOR CODE COMPLIANCE
2013 CALIFORNIA BUILDING CODE

MASON WEST, INC.
1601 E. Miraloma Ave. Placentia, CA 92870
TEL (714) 630 - 0701, www.masonwest.com

Jiefu "Jeff" Zhang, SE
California SE No. S5270

PAGE
M6.10

ANGLE CLIP ATTACHMENT
TO FULL HEIGHT METAL STUD WALL

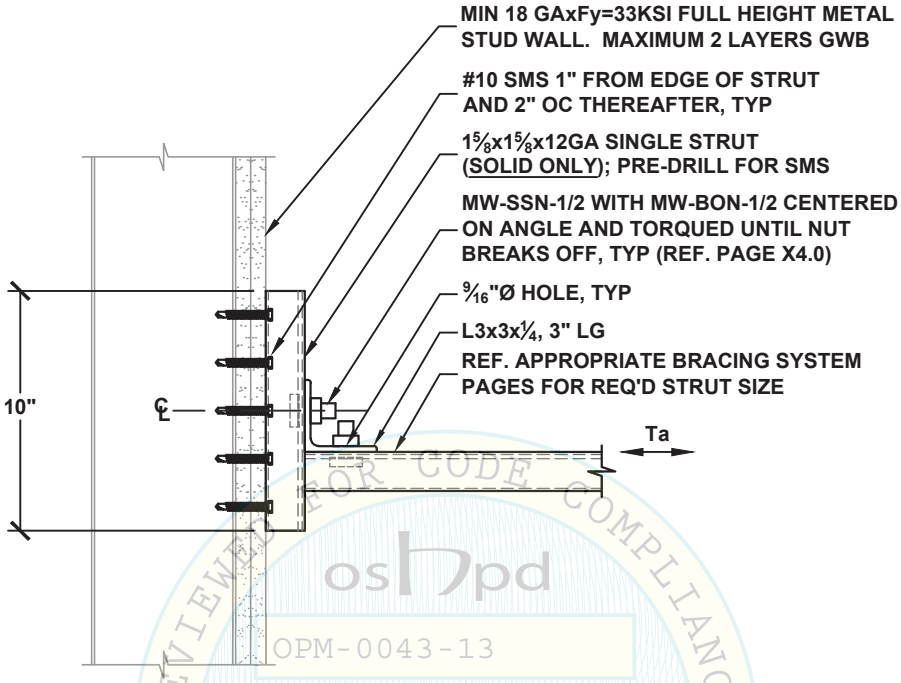

REVIEWED FOR CODE COMPLIANCE
CALIFORNIA BUILDING CODE, 2013
oshpd
OPM-0043-13
BY: Jeffrey Y. Kikumoto
DATE: 06/23/2016

HANGER ATTACHMENT TYPE	ALLOWABLE TENSION LOAD LBS
50A TO 50G	580

SEE DETAIL M0.00 FOR SECTION NOTES

MASON WEST, INC.
1601 E. Miraloma Ave. Placentia, CA 92870
TEL (714) 630 - 0701, www.masonwest.com

Jiefu "Jeff" Zhang, SE
California SE No. S5270

PAGE
M6.11

HANGER ATTACHMENT
TO NON-CONCRETE FILLED METAL DECK

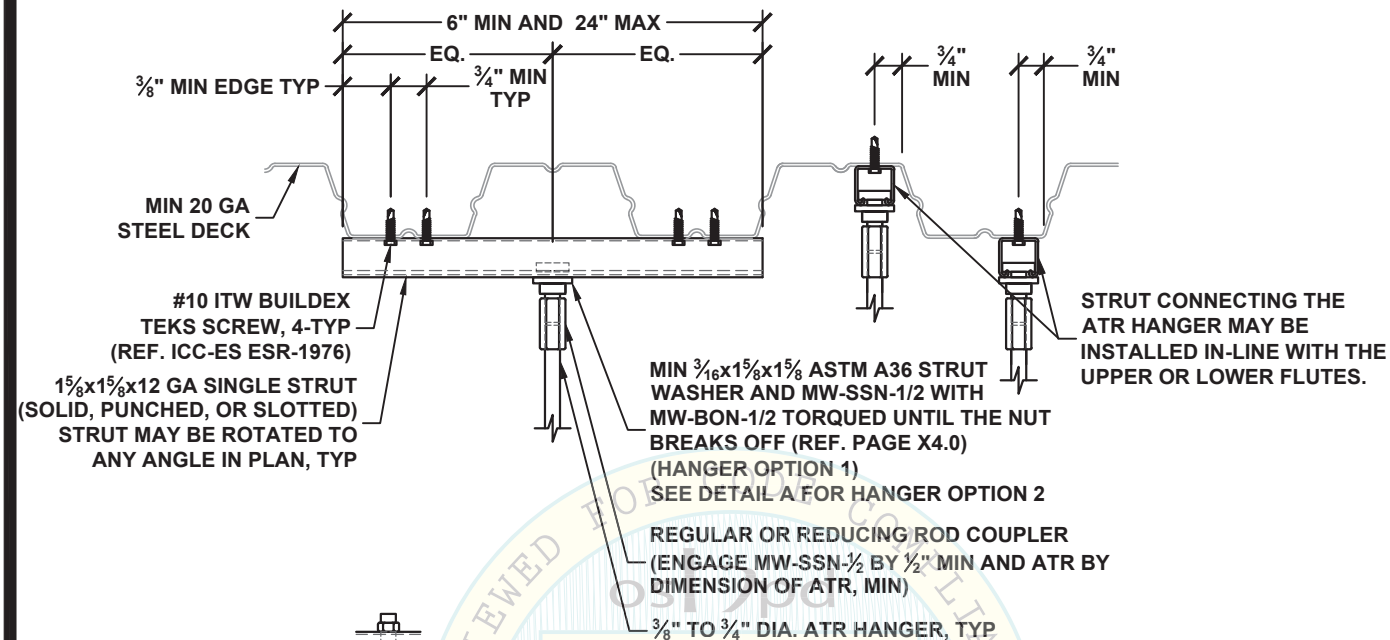

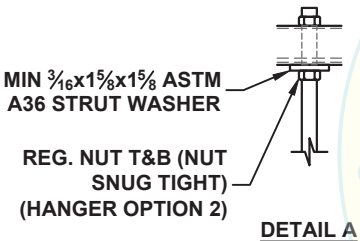

DETAIL A

HANGER ATTACHMENT TYPE	ALLOWABLE VERTICAL LOAD LBS	ATR HANGER DIA. INCH
38A TO 38E	350	3/8
50A TO 50E	350	1/2
63A TO 63E	350	5/8
75A TO 75E	350	3/4

1 - SEE DETAIL M0.00 FOR SECTION NOTES
2 - THE DISTANCE FROM THE CENTER OF ANY SHEET METAL SCREW TO ANY STEEL EDGE SHALL BE 3/8" MIN, INCLUDING PUNCHED AND SLOTTED HOLE EDGES.

REVIEWED FOR CODE COMPLIANCE
OSHPD
OPM-0043-13
BY: Jeffrey Y. Kikumoto
DATE: 06/23/2016
CALIFORNIA BUILDING CODE 2013

MASON WEST, INC.
1601 E. Miraloma Ave. Placentia, CA 92870
TEL (714) 630 - 0701, www.masonwest.com

Jiefu "Jeff" Zhang, SE
California SE No. S5270

PAGE
M7.10

HANGER ATTACHMENT
TO NON-CONCRETE FILLED METAL DECK

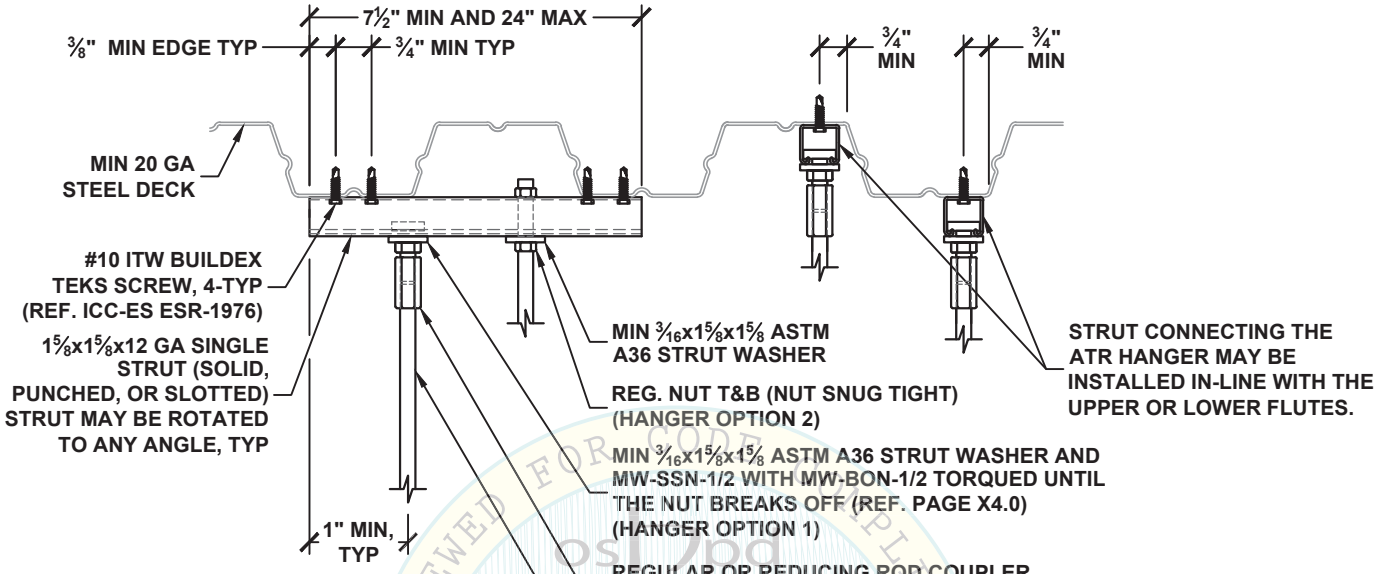

HANGER ATTACHMENT TYPE	ALLOWABLE VERTICAL LOAD LBS	ATR HANGER DIA. INCH
38A TO 38B	170	⅜
50A TO 50B	170	½
63A TO 63B	170	⅝
75A TO 75B	170	¾

1 - SEE DETAIL M0.00 FOR SECTION NOTES
2 - THE DISTANCE FROM THE CENTER OF ANY SHEET METAL SCREW TO ANY STEEL EDGE SHALL BE ⅜" MIN, INCLUDING PUNCHED AND SLOTTED HOLE EDGES.

REVIEWED FOR CODE COMPLIANCE
OSHPD
OPM-0043-13
BY: Jeffrey Y. Kikumoto
DATE: 06/23/2016
CALIFORNIA BUILDING CODE, 2013

MASON WEST, INC.
1601 E. Miraloma Ave. Placentia, CA 92870
TEL (714) 630 - 0701, www.masonwest.com

Jiefu "Jeff" Zhang, SE
California SE No. S5270

PAGE
M7.11

HANGER ATTACHMENT
TO NON-CONCRETE FILLED METAL DECK

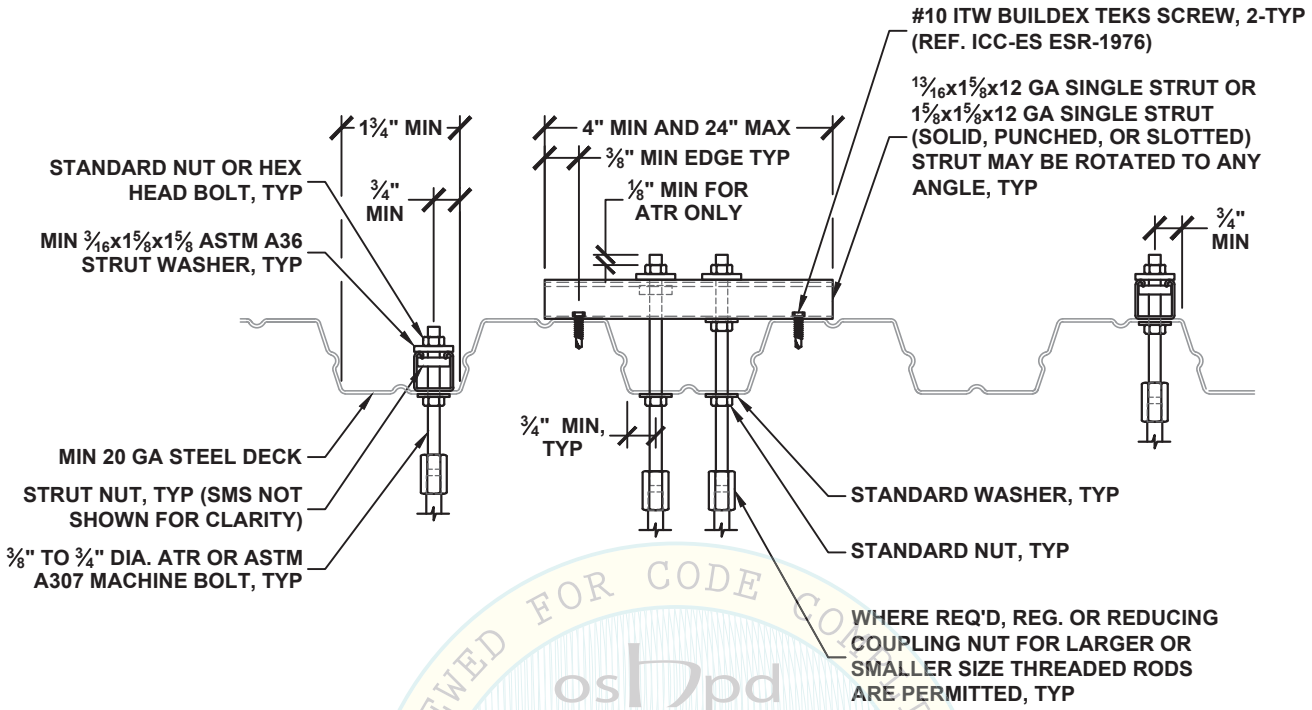

HANGER ATTACHMENT TYPE	ALLOWABLE VERTICAL LOAD LBS	ATR HANGER DIA. INCH
38A TO 38D	250	3/8
50A TO 50D	250	1/2
63A TO 63D	250	5/8
75A TO 75D	250	3/4

FASTENER WITH STRUT NUT	
DIA. INCH	TORQUE REQ'D FT-LBS
3/8	19
1/2	50
5/8	100
3/4	125

1 - CONNECTION OF STANDARD NUTS AND COUPLING NUTS ARE NOT REQUIRED TO BE TORQUED, SNUG TIGHT ONLY.

2 - THE DISTANCE FROM THE CENTER OF ANY SHEET METAL SCREW TO ANY STEEL EDGE SHALL BE 3/8" MIN, INCLUDING PUNCHED AND SLOTTED HOLE EDGES.

REVIEWED FOR CODE COMPLIANCE
OSHPD
OPM-0043-13
BY: Jeffrey Y. Kikumoto
DATE: 06/23/2016
CALIFORNIA BUILDING CODE 2013

MASON WEST, INC.
1601 E. Miraloma Ave. Placentia, CA 92870
TEL (714) 630 - 0701, www.masonwest.com

Jiefu "Jeff" Zhang, SE
California SE No. S5270

PAGE
M7.12

ANGLE CLIP ATTACHMENT TO CONCRETE SLAB, BEAM OR WALL WITH (1) MW-PAL-A-CS CONCRETE INSERT

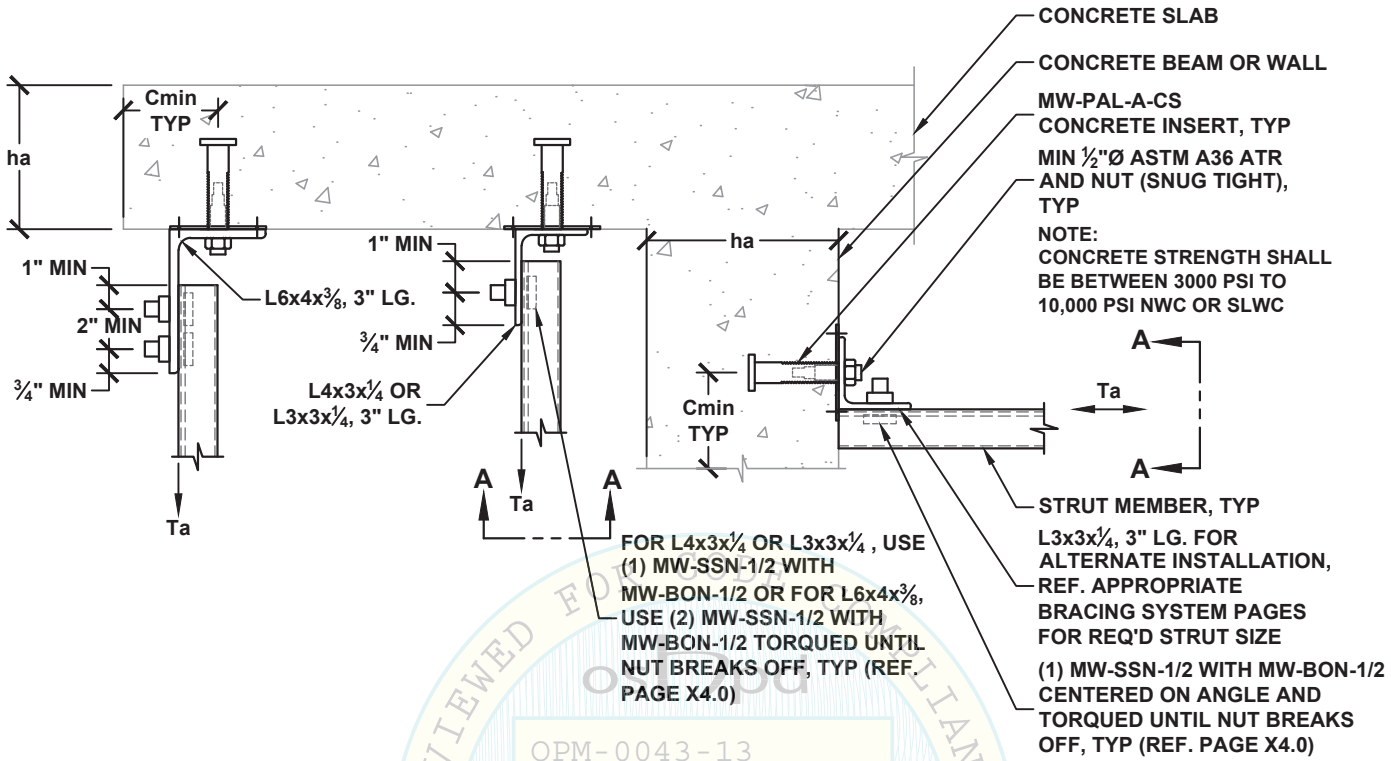

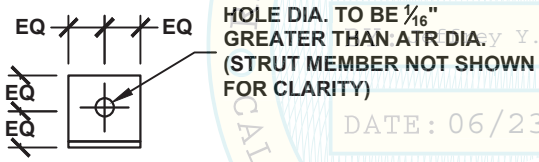

ONE-2004
OPM-0043-13
Jeffrey Y. Kikumoto
DATE: 06/23/2016
REVIEWED FOR CODE COMPLIANCE
CALIFORNIA BUILDING CODE, 2013

SECTION A-A

HANGER ATTACHMENT TYPE	STEEL COMPONENT ALLOWABLE TENSION LOAD Ta LBS	HANGER ATTACHMENT TYPE	CONCRETE INSERT ALLOWABLE TENSION LOAD Tac [1,3] LBS	ANGLE SIZE [2]	MW-PAL-A-CS CONCRETE INSERT (REFER TO PAGES X5.0.CS & X5.2.1)				
					DIA. da INCH	MIN EFF. EMBED. hef INCH	MIN BASE TH. ha INCH	MIN EDGE Cmin INCH	MIN SPACING Smin INCH
50A TO 50G	670	50A TO 50P	3020	L3x3x¼ / L4x3x¼	⅞	3	4½	4½	9
50A TO 50K	1140	50A TO 50P	3020	L6x4x⅜					

SEE DETAIL M0.00 FOR SECTION NOTES

[1] ALLOWABLE LOADS HAVE BEEN INCREASED BY A FACTOR OF 1.2 FOR LOAD COMBINATIONS INCLUDING OVERSTRENGTH, Ω_0, PER ASCE 7-10 SEC. 12.14.3.2.3.

[2] ASTM A36, Fy = 36 KSI

[3] FOR SLWC SLAB AND BEAM, REDUCE ALLOWABLE TENSION LOAD BY MULTIPLYING ALLOWABLE LOAD BY A FACTOR OF 0.85.

MASON WEST, INC.
1601 E. Miraloma Ave. Placentia, CA 92870
TEL (714) 630 - 0701, www.masonwest.com

Jiefu "Jeff" Zhang, SE
California SE No. S5270

PAGE
M8.10

ANGLE CLIP ATTACHMENT
TO CONCRETE FILLED METAL DECK
WITH (1) MW-PAL-A-MD CONCRETE INSERT AT LOWER FLUTE

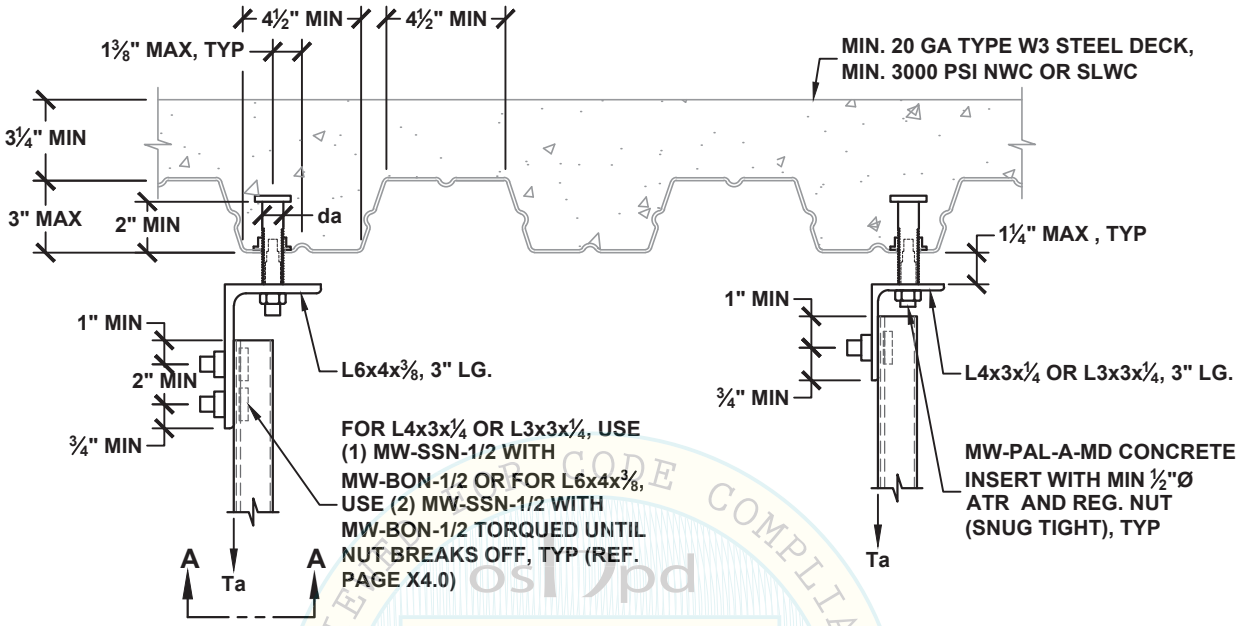

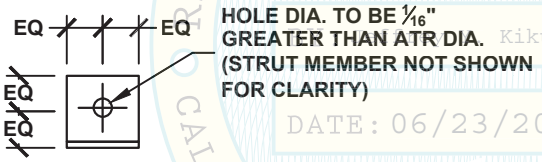

OSHPD
OPM-0043-13
Kikumoto
DATE: 06/23/2016
CALIFORNIA BUILDING CODE, 2013 ○ PREVIEW ○ CODE COMPLIANCE ○

SECTION A-A

HANGER ATTACHMENT TYPE	STEEL COMPONENT ALLOWABLE VERTICAL LOAD Ta LBS	HANGER ATTACHMENT TYPE	CONCRETE INSERT ALLOWABLE VERTICAL LOAD Tac [1] LBS	ANGLE SIZE [2]	MW-PAL-A-MD CONCRETE INSERT (REFER TO PAGES X5.0.MD & X5.1)		
					DIA. da INCH	MIN SPACING Smin INCH	MIN END DIST. Cmin INCH
50A TO 50G	670	50A TO 50J	930	L3x3x¼ / L4x3x¼	⅞	6¾	5¼
50A TO 50K	1140	50A TO 50J	930	L6x4x⅜			

SEE DETAIL M0.00 FOR SECTION NOTES

[1] ALLOWABLE LOADS HAVE BEEN INCREASED BY A FACTOR OF 1.2 FOR LOAD COMBINATIONS INCLUDING OVERSTRENGTH, Ω_0, PER ASCE 7-10 SEC. 12.14.3.2.3.

[2] ASTM A36, Fy = 36 KSI

MASON WEST, INC.
1601 E. Miraloma Ave. Placentia, CA 92870
TEL (714) 630 - 0701, www.masonwest.com

Jiefu "Jeff" Zhang, SE
California SE No. S5270

PAGE
M8.11

ANGLE CLIP ATTACHMENT
TO CONCRETE FILLED METAL DECK
WITH (1) MW-PAL-A-MD CONCRETE INSERT AT UPPER FLUTE

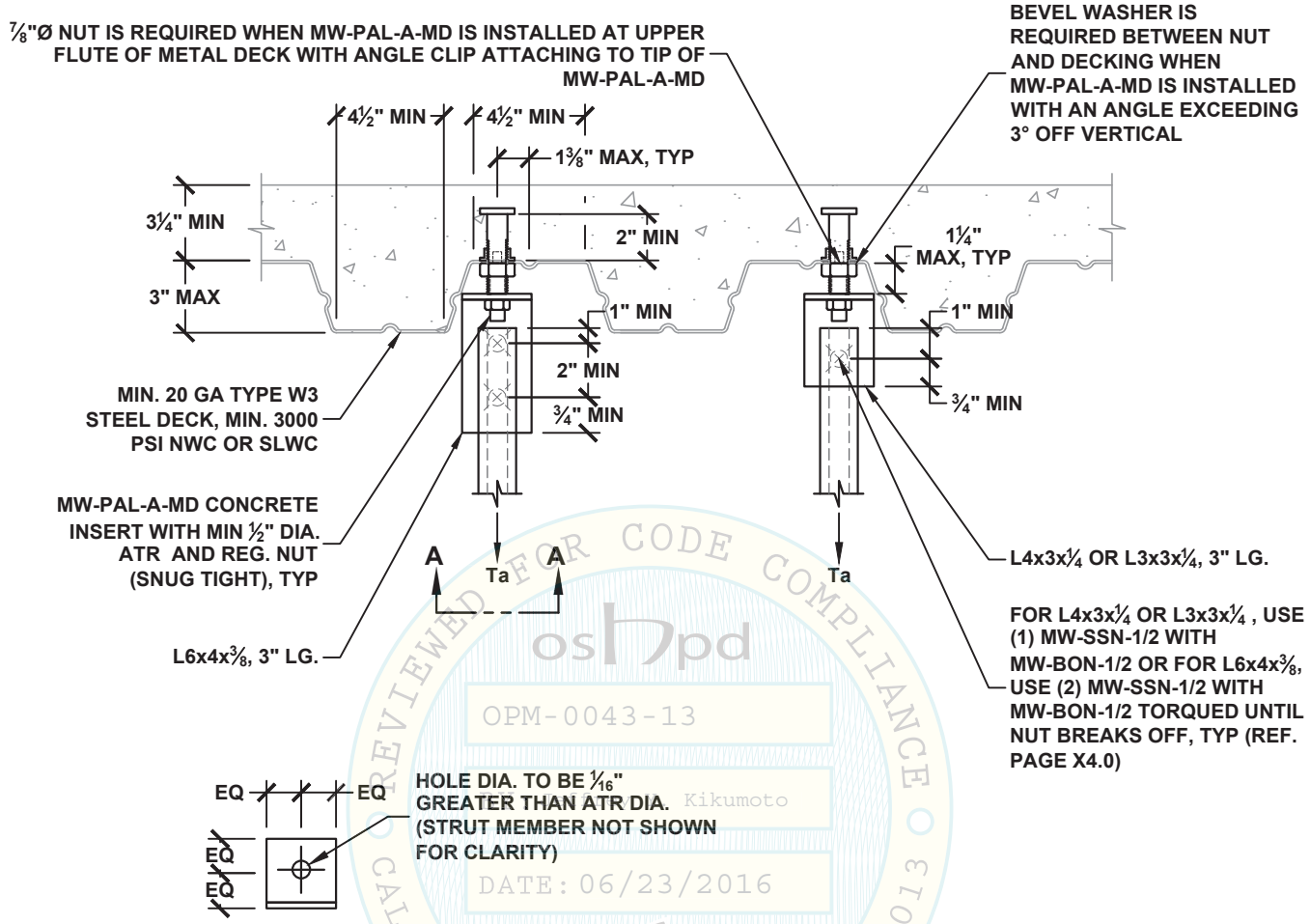

REVIEWED FOR CODE COMPLIANCE
CALIFORNIA BUILDING CODE, 2013
oshpd
OPM-0043-13
Kikumoto
DATE: 06/23/2016

SECTION A-A

HANGER ATTACHMENT TYPE	STEEL COMPONENT ALLOWABLE VERTICAL LOAD Ta LBS	HANGER ATTACHMENT TYPE	CONCRETE INSERT ALLOWABLE VERTICAL LOAD Tac [1] LBS	ANGLE SIZE [2]	MW-PAL-A-MD CONCRETE INSERT (REFER TO PAGES X5.0.MD & X5.1)		
					DIA. da INCH	MIN SPACING Smin INCH	MIN END DIST. Cmin INCH
50A TO 50G	670	50A TO 50P	2590	L3x3x¼ / L4x3x¼	⅞	6¾	5¼
50A TO 50K	1140	50A TO 50P	2590	L6x4x⅜			

SEE DETAIL M0.00 FOR SECTION NOTES

[1] ALLOWABLE LOADS HAVE BEEN INCREASED BY A FACTOR OF 1.2 FOR LOAD COMBINATIONS INCLUDING OVERSTRENGTH, Ω_0, PER ASCE 7-10 SEC. 12.14.3.2.3.

[2] ASTM A36, Fy = 36 KSI

MASON WEST, INC.
1601 E. Miraloma Ave. Placentia, CA 92870
TEL (714) 630 - 0701, www.masonwest.com

Jiefu "Jeff" Zhang, SE
California SE No. S5270

PAGE
M8.11.1

ANGLE CLIP ATTACHMENT TO CONCRETE SLAB, BEAM OR WALL WITH (1) HILTI KB-TZ CONCRETE ANCHOR

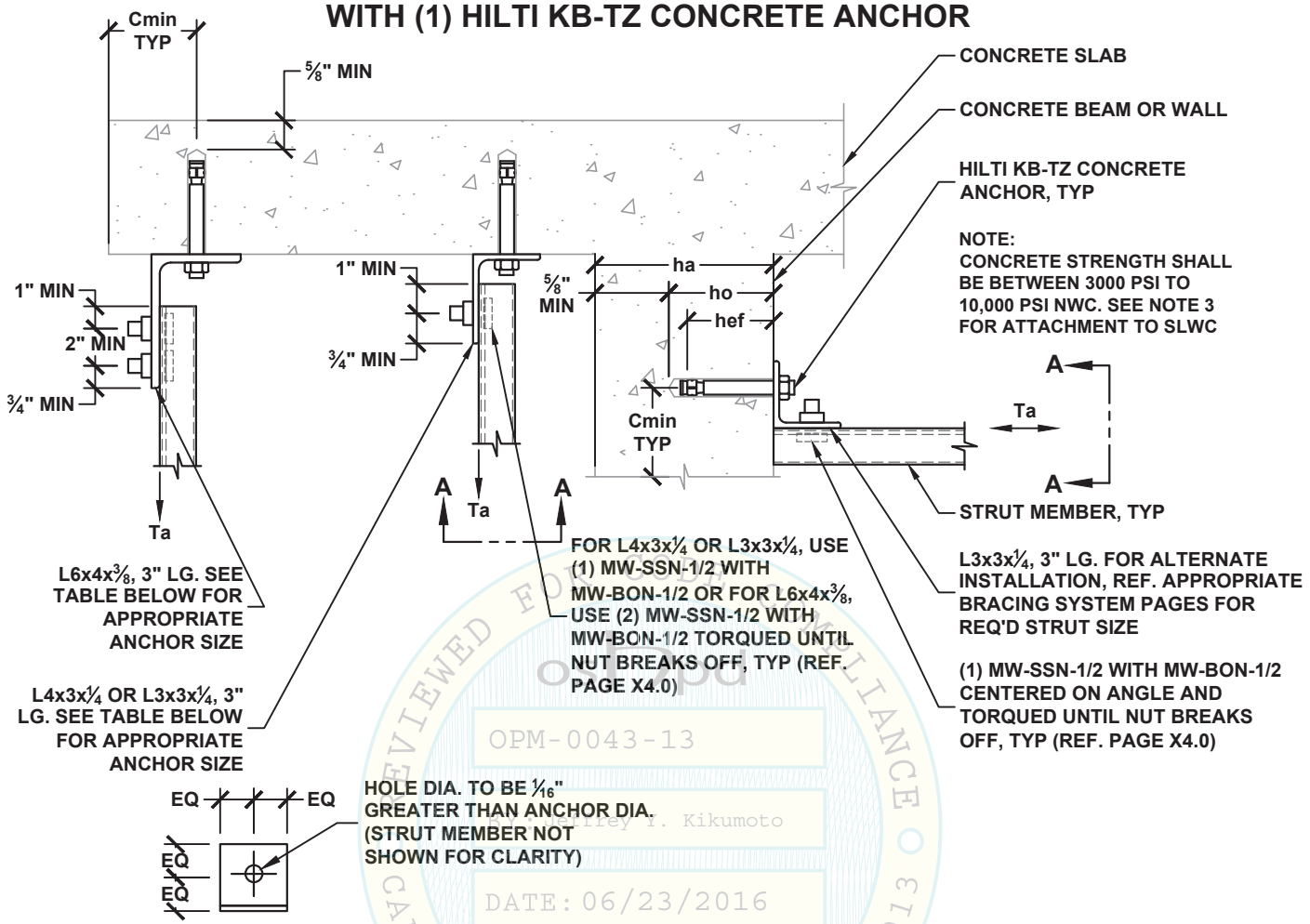

SECTION A-A

HANGER ATTACHMENT TYPE	STEEL COMPONENT ALLOWABLE TENSION LOAD Ta LBS	HANGER ATTACHMENT TYPE	CONCRETE ANCHOR ALLOWABLE TENSION LOAD Tac [1,3] LBS	ANGLE SIZE [2]	HILTI KB-TZ CONCRETE ANCHOR (ICC ESR-1917) SPECIAL INSPECTION REQ'D						
					DIA. da INCH	MIN EFF. EMBED. hef INCH	MIN HOLE DEPTH ho INCH	MIN BASE TH. ha INCH	MIN EDGE Cmin INCH	MIN SPACING Smin INCH	TORQUE REQ'D FT-LBS
38A TO 38G	670	38A TO 38K	1020	L3x3x1/4 / L4x3x1/4	3/8	2	2 5/8	4	4 1/2	6	25
50A TO 50G	670	50A TO 50K	1080	L3x3x1/4 / L4x3x1/4	1/2	2	2 5/8	4	4 1/2	6	40
50A TO 50K	1140	50A TO 50N	2200	L6x4x3/8	1/2	3 1/4	4	6	6	9 3/4	40
63A TO 63K	1140	63A TO 63P	3050	L6x4x3/8	5/8	4	4 3/4	6	12	12	60

SEE DETAIL M0.00 FOR SECTION NOTES

[1] ALLOWABLE LOADS HAVE BEEN INCREASED BY A FACTOR OF 1.2 FOR LOAD COMBINATIONS INCLUDING OVERSTRENGTH, Ω_0, PER ASCE 7-10 SEC. 12.14.3.2.3.

[2] ASTM A36, Fy = 36 KSI

[3] FOR SLWC SLAB AND BEAM, REDUCE ALLOWABLE TENSION LOAD BY MULTIPLYING ALLOWABLE LOAD BY A FACTOR OF 0.6.

MASON WEST, INC.
1601 E. Miraloma Ave. Placentia, CA 92870
TEL (714) 630 - 0701, www.masonwest.com

Jiefu "Jeff" Zhang, SE
California SE No. S5270

PAGE
M8.20

OSHPD PREAPPROVED
OPM-0043-13
Reviewed by: Jeffrey T. Kikumoto
DATE: 06/23/2016
REVIEWED FOR CODE COMPLIANCE
CALIFORNIA BUILDING CODE 2013

ANGLE CLIP ATTACHMENT
TO CONCRETE FILLED METAL DECK
WITH (1) HILTI KB-TZ CONCRETE ANCHOR

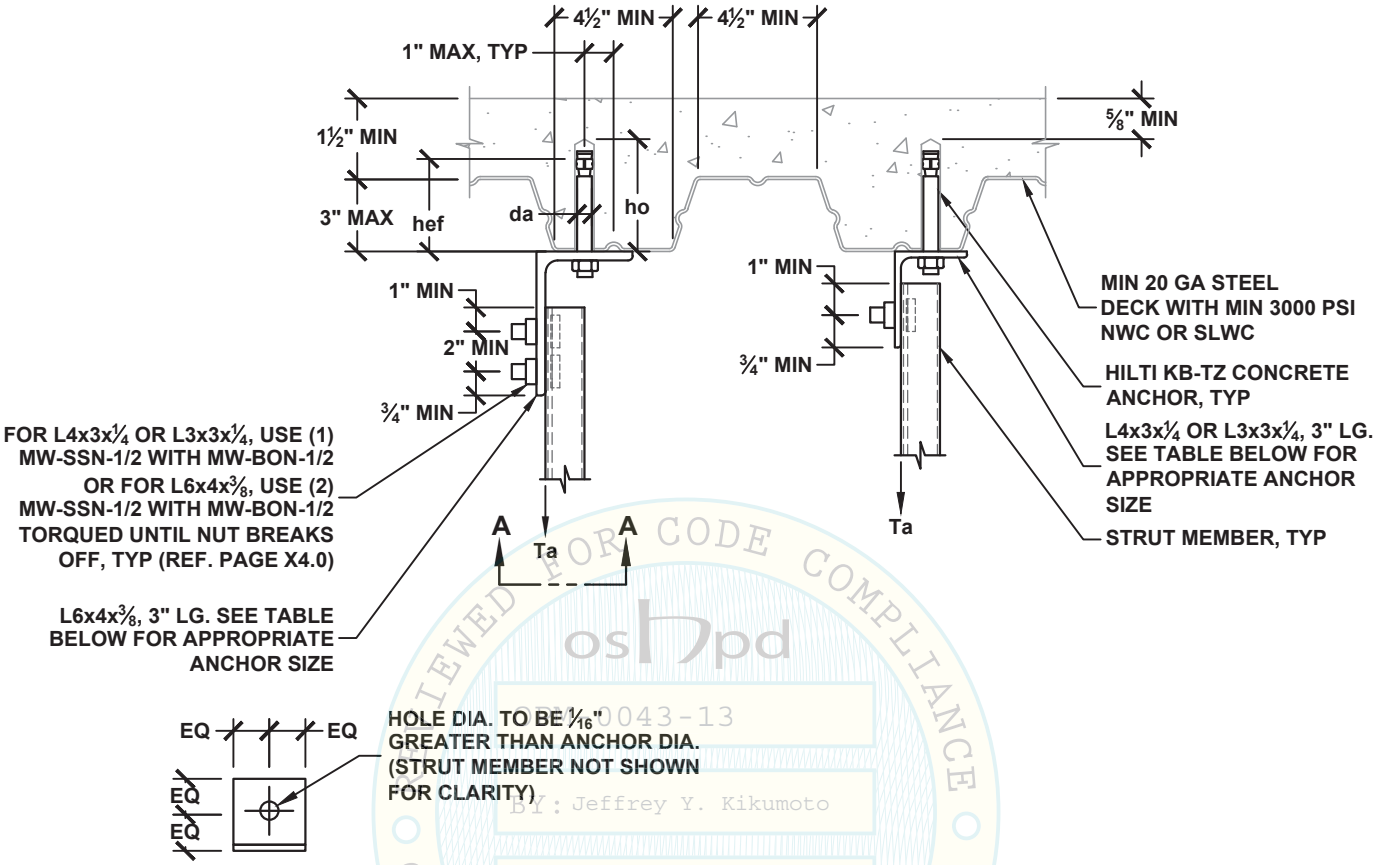

HOLE DIA. TO BE 1⁄16" GREATER THAN ANCHOR DIA. (STRUT MEMBER NOT SHOWN FOR CLARITY)

REVIEWED FOR CODE COMPLIANCE
CALIFORNIA BUILDING CODE 2013
OSHPD
OPM-0043-13
BY: Jeffrey Y. Kikumoto
DATE: 06/23/2016

SECTION A-A

HANGER ATTACHMENT TYPE	STEEL COMPONENT ALLOWABLE VERTICAL LOAD Ta LBS	HANGER ATTACHMENT TYPE	CONCRETE ANCHOR ALLOWABLE VERTICAL LOAD Tac [1] LBS	ANGLE SIZE [2]	HILTI KB-TZ CONCRETE ANCHOR (ICC ESR-1917) SPECIAL INSPECTION REQ'D					
					DIA. da INCH	MIN EFF. EMBED hef INCH	MIN HOLE DEPTH ho INCH	MIN SPACING Smin INCH	MIN END DIST. Cmin INCH	TORQUE REQ'D FT-LBS
38A TO 38G	670	38A TO 38G	600	L3x3x¼ / L4x3x¼	⅜	2	2⅝	6¾	3⅜	25
50A TO 50G	670	50A TO 50G	600	L3x3x¼ / L4x3x¼	½	2	2⅝	6¾	3⅜	40
50A TO 50K	1140	50A TO 50K	1070	L6x4x⅜	½	3¼	4	9¾	4⅞	40
63A TO 63K	1140	63A TO 63L	1590	L6x4x⅜	⅝	4	4¾	12	6	60

SEE DETAIL M0.00 FOR SECTION NOTES

[1] ALLOWABLE LOADS HAVE BEEN INCREASED BY A FACTOR OF 1.2 FOR LOAD COMBINATIONS INCLUDING OVERSTRENGTH, Ω_0, PER ASCE 7-10 SEC. 12.14.3.2.3.

[2] ASTM A36, Fy = 36 KSI

MASON WEST, INC.
1601 E. Miraloma Ave. Placentia, CA 92870
TEL (714) 630 - 0701, www.masonwest.com

Jiefu "Jeff" Zhang, SE
California SE No. S5270

PAGE
M8.21

ANGLE CLIP ATTACHMENT
TO CONCRETE FILLED METAL DECK
WITH (1) HILTI KB-TZ CONCRETE ANCHOR

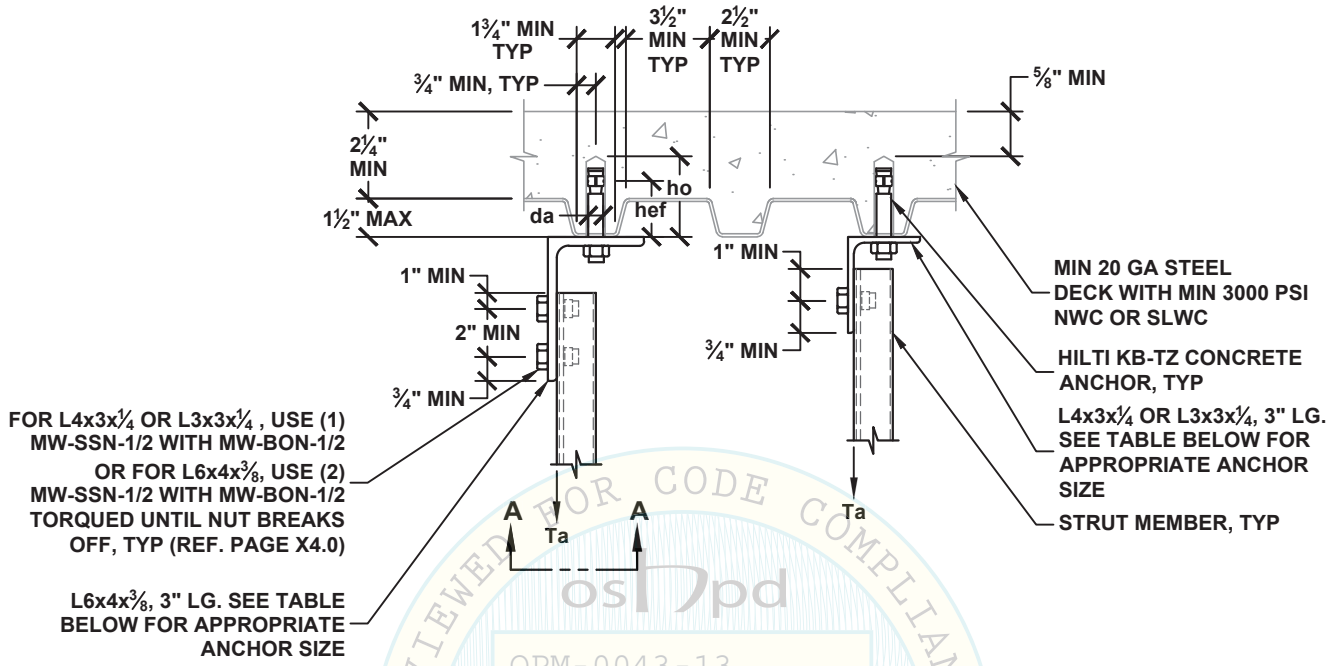

VIEWED FOR CODE COMPLIANCE
CALIFORNIA BUILDING CODE 2013
OPM-0043-13
Reviewed by: Jeffrey Kikumoto
DATE: 06/23/2016

SECTION A-A

HANGER ATTACHMENT TYPE	STEEL COMPONENT ALLOWABLE VERTICAL LOAD Ta LBS	HANGER ATTACHMENT TYPE	CONCRETE ANCHOR ALLOWABLE VERTICAL LOAD Tac [1] LBS	ANGLE SIZE [2]	HILTI KB-TZ CONCRETE ANCHOR (ICC ESR-1917) SPECIAL INSPECTION REQ'D					
					DIA. da INCH	MIN EFF. EMBED hef INCH	MIN HOLE DEPTH ho INCH	MIN SPACING Smin INCH	MIN END DIST. Cmin INCH	TORQUE REQ'D FT-LBS
38A TO 38G	670	38A TO 38G	680	L3x3x¼ / L4x3x¼	⅜	2	2⅝	6	3	25
50A TO 50G	670	50A TO 50F	540	L3x3x¼ / L4x3x¼	½	2	2⅝	6	3	40
50A TO 50K	1140	50A TO 50K	1230	L6x4x⅜	½	3¼	4	9¾	4⅞	40
63A TO 63K	1140	63A TO 63K	1180	L6x4x⅜	⅝	3⅛	3¾	9⅜	4¾	60

SEE DETAIL M0.00 FOR SECTION NOTES

[1] ALLOWABLE LOADS HAVE BEEN INCREASED BY A FACTOR OF 1.2 FOR LOAD COMBINATIONS INCLUDING OVERSTRENGTH, Ω_0, PER ASCE 7-10 SEC. 12.14.3.2.3.

[2] ASTM A36, Fy = 36 KSI

MASON WEST, INC.
1601 E. Miraloma Ave. Placentia, CA 92870
TEL (714) 630 - 0701, www.masonwest.com

Jiefu "Jeff" Zhang, SE
California SE No. S5270

PAGE
M8.22

ANGLE CLIP ATTACHMENT TO CONCRETE SLAB, BEAM OR WALL WITH (1) POWER-STUD+ SD1 CONCRETE ANCHOR

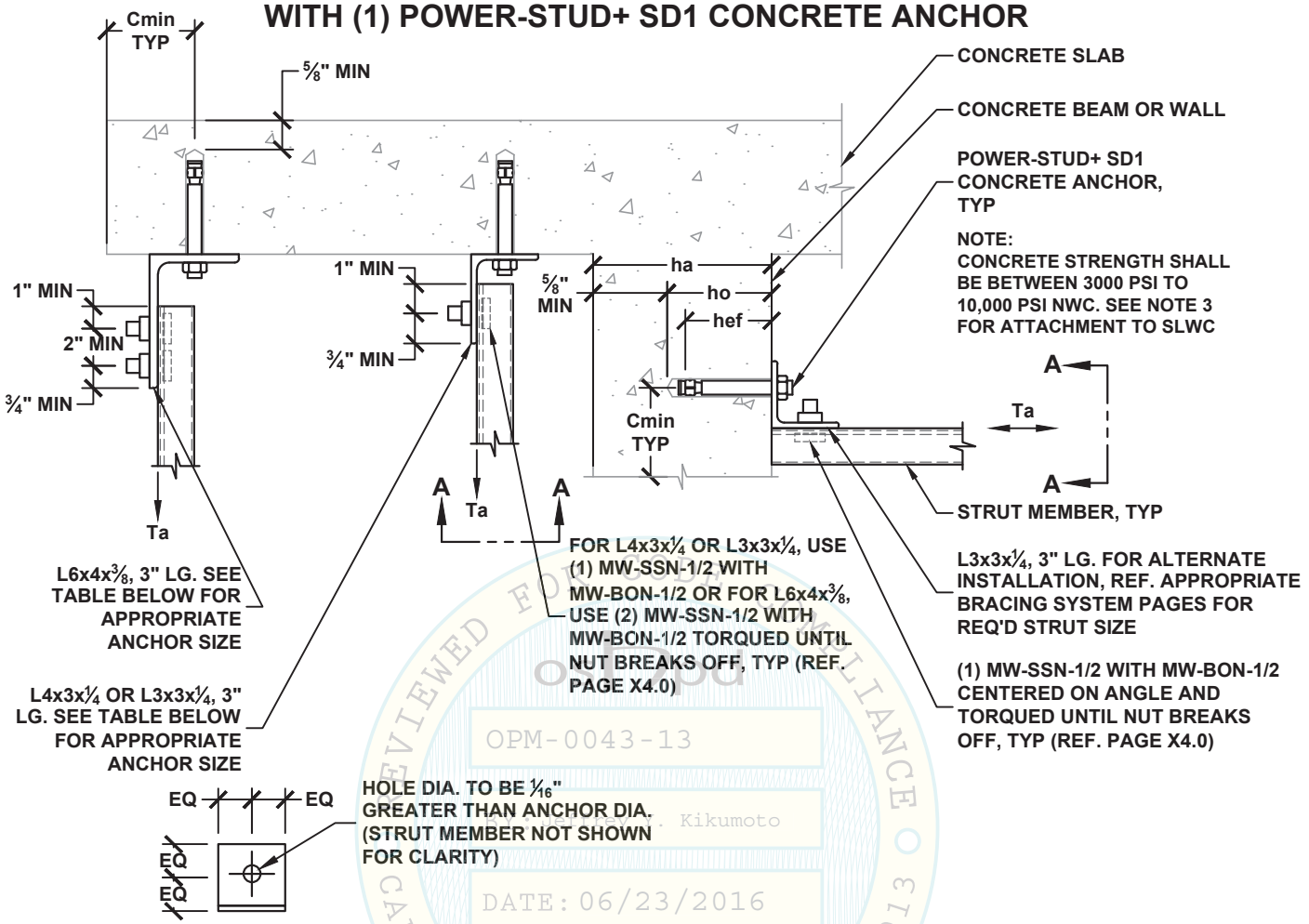

OSHPD
OPM-0043-13
Kikumoto
DATE: 06/23/2016
REVIEWED FOR CODE COMPLIANCE
CALIFORNIA BUILDING CODE, 2013

SECTION A-A

HANGER ATTACHMENT TYPE	STEEL COMPONENT ALLOWABLE TENSION LOAD Ta LBS	HANGER ATTACHMENT TYPE	CONCRETE ANCHOR ALLOWABLE TENSION LOAD Tac [1,3] LBS	ANGLE SIZE [2]	POWER-STUD+ SD1 CONCRETE ANCHOR (ICC ESR-2818) SPECIAL INSPECTION REQ'D						
					DIA. da INCH	MIN EFF. EMBED. hef INCH	MIN HOLE DEPTH ho INCH	MIN BASE TH. ha INCH	MIN EDGE Cmin INCH	MIN SPACING Smin INCH	TORQUE REQ'D FT-LBS
38A TO 38G	670	38A TO 38J	910	L3x3x1/4 / L4x3x1/4	3/8	2	2 5/8	4	4 1/2	6	20
50A TO 50K	1140	50A TO 50K	1120	L6x4x3/8	1/2	3 1/4	4	6	4 1/2	9 3/4	40
63A TO 63K	1140	63A TO 63M	1740	L6x4x3/8	5/8	2 3/4	3 3/4	6	6	8 1/4	80

SEE DETAIL M0.00 FOR SECTION NOTES

[1] ALLOWABLE LOADS HAVE BEEN INCREASED BY A FACTOR OF 1.2 FOR LOAD COMBINATIONS INCLUDING OVERSTRENGTH, Ω_0, PER ASCE 7-10 SEC. 12.14.3.2.3.

[2] ASTM A36, Fy = 36 KSI

[3] FOR SLWC SLAB AND BEAM, REDUCE ALLOWABLE TENSION LOAD BY MULTIPLYING ALLOWABLE LOAD BY A FACTOR OF 0.6.

MASON WEST, INC.
1601 E. Miraloma Ave. Placentia, CA 92870
TEL (714) 630 - 0701, www.masonwest.com

Jiefu "Jeff" Zhang, SE
California SE No. S5270

PAGE
M8.30

ANGLE CLIP ATTACHMENT
TO CONCRETE FILLED METAL DECK
WITH (1) POWER-STUD+ SD1 CONCRETE ANCHOR

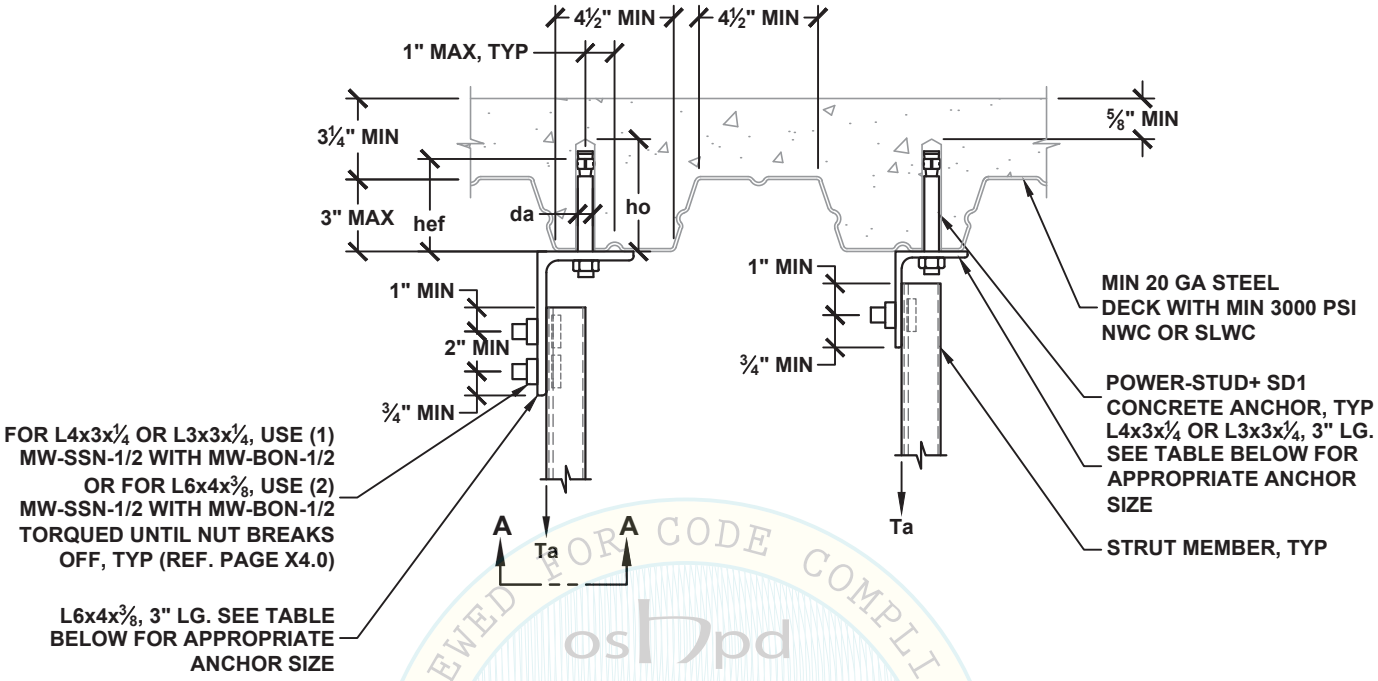

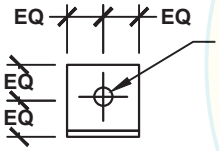

REVIEWED FOR CODE COMPLIANCE
CALIFORNIA BUILDING CODE, 2013
oshpd
OPM-0043-13
Reviewed by: Jeffrey H. Kikumoto
DATE: 06/23/2016

SECTION A-A

HANGER ATTACHMENT TYPE	STEEL COMPONENT ALLOWABLE VERTICAL LOAD Ta LBS	HANGER ATTACHMENT TYPE	CONCRETE ANCHOR ALLOWABLE VERTICAL LOAD Tac [1] LBS	ANGLE SIZE [2]	POWER-STUD+ SD1 CONCRETE ANCHOR (ICC ESR-2818) SPECIAL INSPECTION REQ'D					
					DIA. da INCH	MIN EFF. EMBED hef INCH	MIN HOLE DEPTH ho INCH	MIN SPACING Smin INCH	MIN END DIST. Cmin INCH	TORQUE REQ'D FT-LBS
38A TO 38G	670	38A TO 38G	560	L3x3x¼ / L4x3x¼	⅜	2	2⅝	6¾	3⅜	20
50A TO 50G	670	50A TO 50G	980	L3x3x¼ / L4x3x¼	½	2	2¾	6¾	3⅜	40
63A TO 63K	1140	63A TO 63K	810	L6x4x⅜	⅝	2¾	3¾	8¼	4⅛	80

SEE DETAIL M0.00 FOR SECTION NOTES

[1] ALLOWABLE LOADS HAVE BEEN INCREASED BY A FACTOR OF 1.2 FOR LOAD COMBINATIONS INCLUDING OVERSTRENGTH, Ω_0, PER ASCE 7-10 SEC. 12.14.3.2.3.

[2] ASTM A36, Fy = 36 KSI

MASON WEST, INC.
1601 E. Miraloma Ave. Placentia, CA 92870
TEL (714) 630 - 0701, www.masonwest.com

Jiefu "Jeff" Zhang, SE
California SE No. S5270

PAGE
M8.31

ANGLE CLIP ATTACHMENT
TO CONCRETE FILLED METAL DECK
WITH (1) POWER-STUD+ SD1 CONCRETE ANCHOR

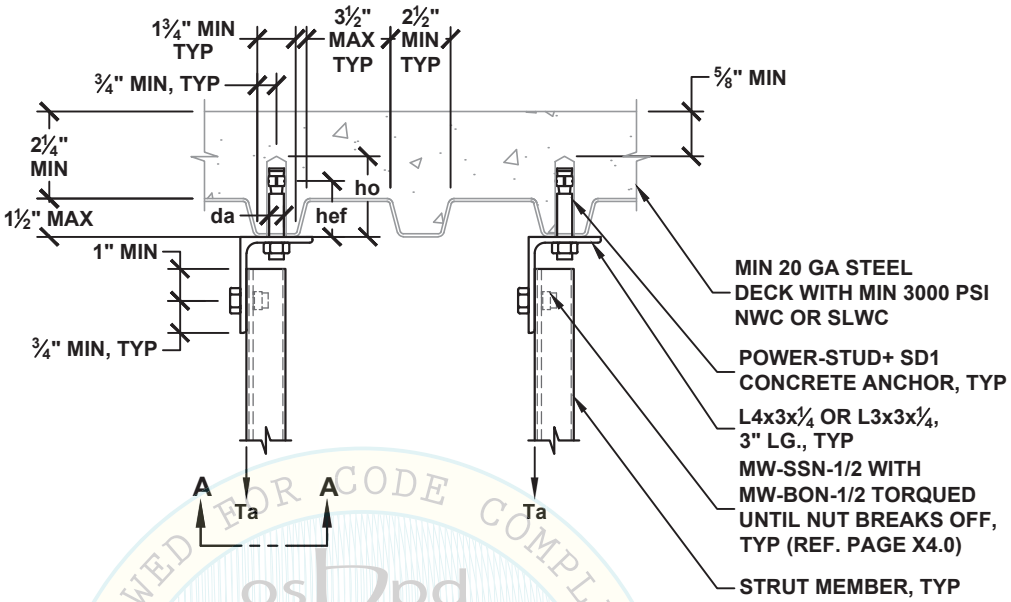

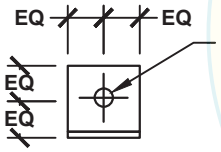

HOLE DIA. TO BE 1/16" GREATER THAN ANCHOR DIA. (STRUT MEMBER NOT SHOWN FOR CLARITY)

SECTION A-A

HANGER ATTACHMENT TYPE	STEEL COMPONENT ALLOWABLE VERTICAL LOAD Ta LBS	HANGER ATTACHMENT TYPE	CONCRETE ANCHOR ALLOWABLE VERTICAL LOAD Tac [1] LBS	ANGLE SIZE [2]	POWER-STUD+ SD1 CONCRETE ANCHOR (ICC ESR-2818) SPECIAL INSPECTION REQ'D					
					DIA. da INCH	MIN EFF. EMBED hef INCH	MIN HOLE DEPTH ho INCH	MIN SPACING Smin INCH	MIN END DIST. Cmin INCH	TORQUE REQ'D FT-LBS
38A TO 38G	670	38A TO 38F	480	L3x3x¼ / L4x3x¼	⅜	2	2⅝	6	3	20
50A TO 50G	670	50A TO 50G	580	L3x3x¼ / L4x3x¼	½	2	2¾	6	3	40

SEE DETAIL M0.00 FOR SECTION NOTES

[1] ALLOWABLE LOADS HAVE BEEN INCREASED BY A FACTOR OF 1.2 FOR LOAD COMBINATIONS INCLUDING OVERSTRENGTH, Ω_0, PER ASCE 7-10 SEC. 12.14.3.2.3.

[2] ASTM A36, Fy = 36 KSI

MASON WEST, INC.
1601 E. Miraloma Ave. Placentia, CA 92870
TEL (714) 630 - 0701, www.masonwest.com

Jiefu "Jeff" Zhang, SE
California SE No. S5270

PAGE
M8.32

REVIEWED FOR CODE COMPLIANCE CALIFORNIA BUILDING CODE, 2013
OSHPD
OPM-0043-13
Kikumoto
DATE: 06/23/2016

ANGLE CLIP ATTACHMENT TO CONCRETE SLAB, BEAM OR WALL WITH (1) MASON IND. N.Y. SAS(E) CONCRETE ANCHOR

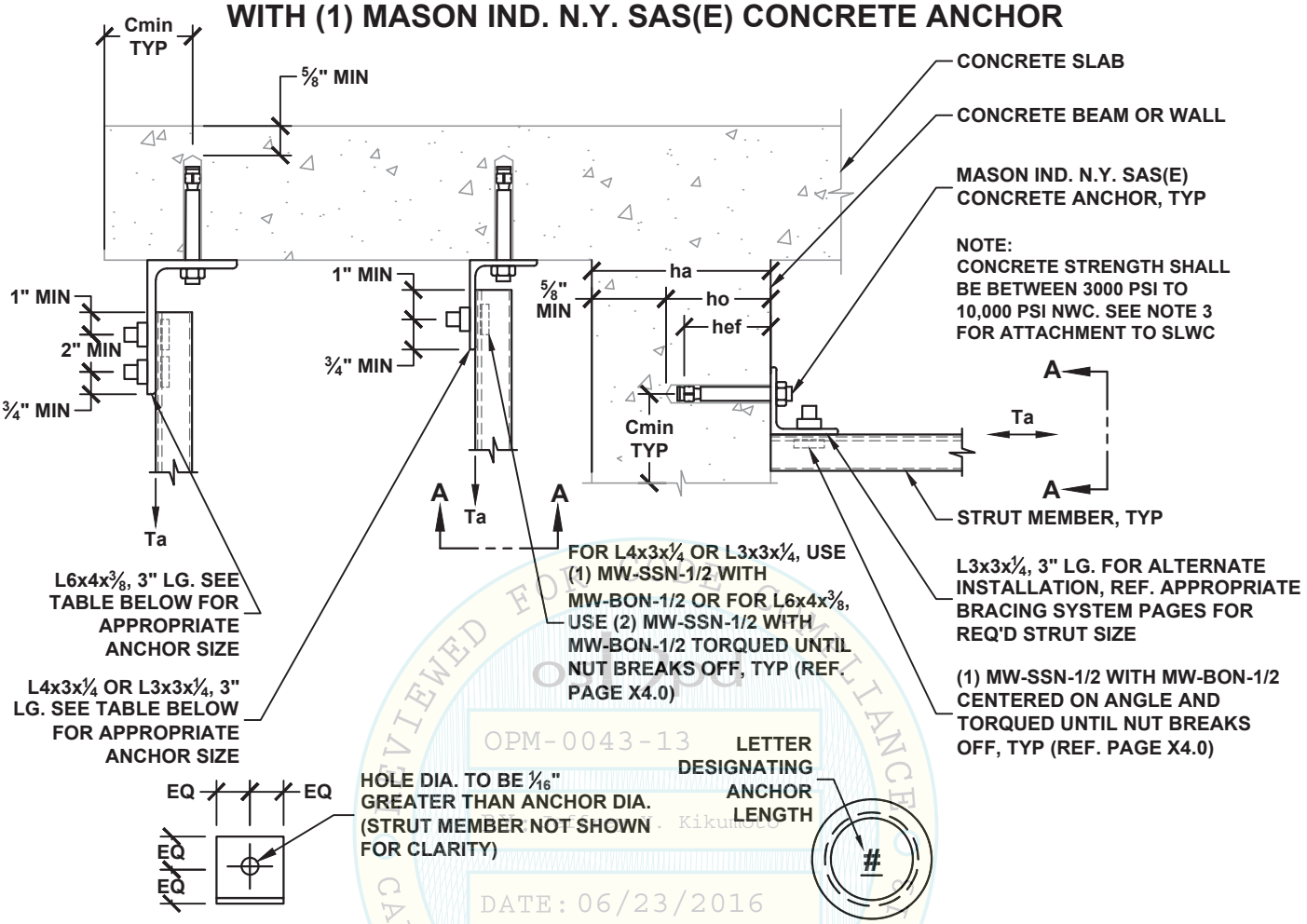

SECTION A-A

SAS(E) IDENTIFICATION

HANGER ATTACHMENT TYPE	STEEL COMPONENT ALLOWABLE TENSION LOAD Ta LBS	HANGER ATTACHMENT TYPE	CONCRETE ANCHOR ALLOWABLE TENSION LOAD Tac [1,3] LBS	ANGLE SIZE [2]	MASON IND. N.Y. SAS(E) CONCRETE ANCHORS (ICC ESR-3037) SPECIAL INSPECTION REQ'D						
					DIA. da INCH	MIN EFF. EMBED. hef INCH	MIN HOLE DEPTH ho INCH	MIN BASE TH. ha INCH	MIN EDGE Cmin INCH	MIN SPACING Smin INCH	TORQUE REQ'D FT-LBS
38A TO 38G	670	38A TO 38K	1240	L3x3x1/4 / L4x3x1/4	3/8	2 1/2	3	4 1/2	6	7 1/2	30
50A TO 50G	670	50A TO 50L	1290	L3x3x1/4 / L4x3x1/4	1/2	2 1/4	3	4 1/2	7	6 3/4	60
50A TO 50K	1140	50A TO 50M	1680	L6x4x3/8	1/2	3 3/8	4 1/8	6	7	10 1/8	60
63A TO 63K	1140	63A TO 63P	3090	L6x4x3/8	5/8	4 1/2	5 3/8	8	7	13 1/2	90

SEE DETAIL M0.00 FOR SECTION NOTES

[1] ALLOWABLE LOADS HAVE BEEN INCREASED BY A FACTOR OF 1.2 FOR LOAD COMBINATIONS INCLUDING OVERSTRENGTH, Ω_0, PER ASCE 7-10 SEC. 12.14.3.2.3.

[2] ASTM A36, Fy = 36 KSI

[3] FOR SLWC SLAB AND BEAM, REDUCE ALLOWABLE TENSION LOAD BY MULTIPLYING ALLOWABLE LOAD BY A FACTOR OF 0.6.

MASON WEST, INC.
1601 E. Miraloma Ave. Placentia, CA 92870
TEL (714) 630 - 0701, www.masonwest.com

Jiefu "Jeff" Zhang, SE
California SE No. S5270

PAGE
M8.40

REVIEWED FOR CODE COMPLIANCE
OPM-0043-13
Kikumoto
DATE: 06/23/2016
CALIFORNIA BUILDING CODE

ANGLE CLIP ATTACHMENT
TO CONCRETE FILLED METAL DECK
WITH (1) MASON IND. N.Y. SAS(E) CONCRETE ANCHOR

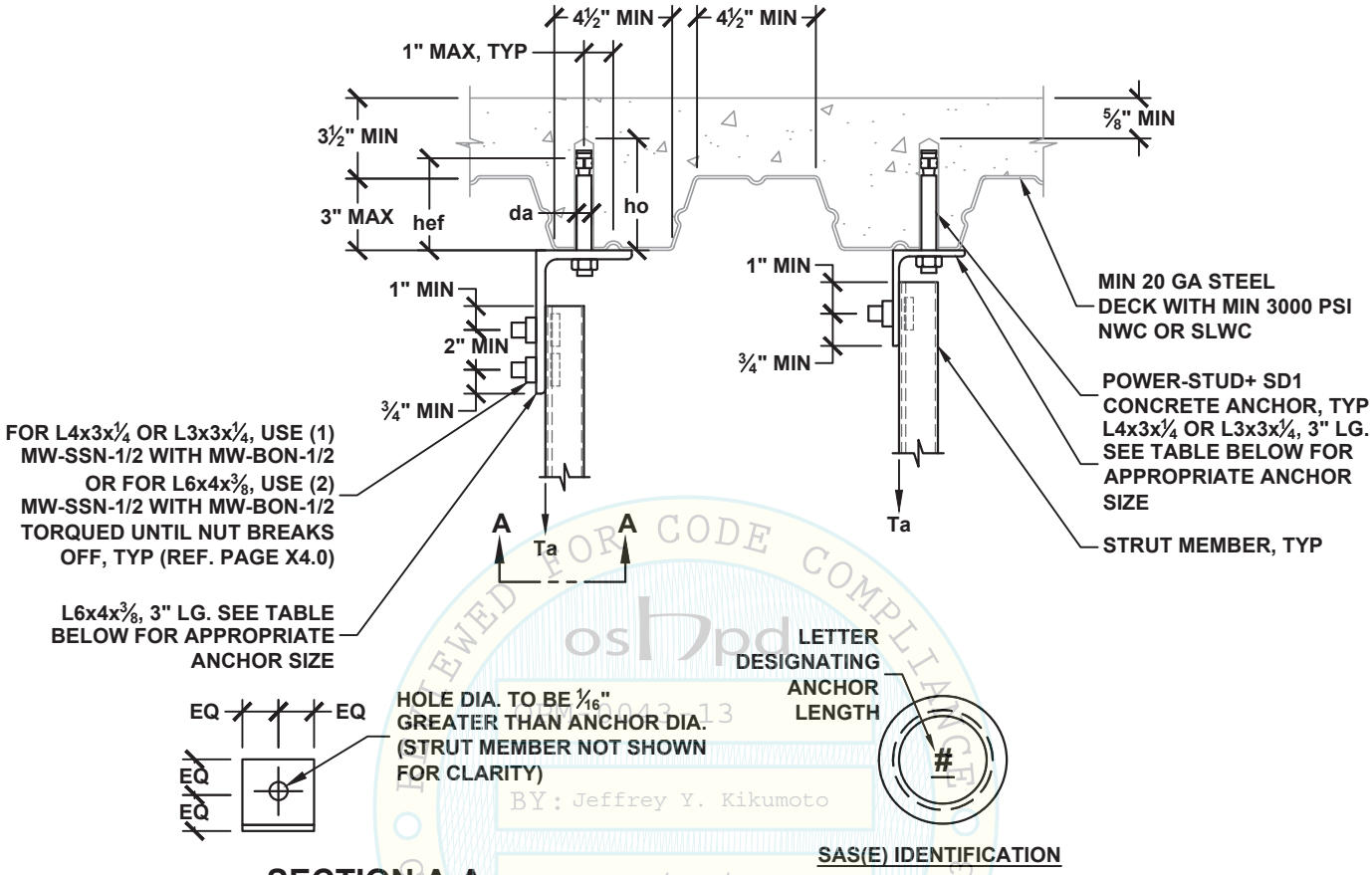

SECTION A-A

OPM-0043-13
BY: Jeffrey Y. Kikumoto
DATE: 06/23/2016

HANGER ATTACHMENT TYPE	STEEL COMPONENT ALLOWABLE VERTICAL LOAD Ta LBS	HANGER ATTACHMENT TYPE	CONCRETE ANCHOR ALLOWABLE VERTICAL LOAD Tac [1] LBS	ANGLE SIZE [2]	MASON IND. N.Y. SAS(E) CONCRETE ANCHOR (ICC ESR-3037) SPECIAL INSPECTION REQ'D					
					DIA. da INCH	MIN EFF. EMBED hef INCH	MIN HOLE DEPTH ho INCH	MIN SPACING Smin INCH	MIN END DIST. Cmin INCH	TORQUE REQ'D FT-LBS
38A TO 38G	670	38A TO 38E	430	L3x3x¼ / L4x3x¼	⅜	1⅝	2⅛	6¾	3⅜	30
38A TO 38G	670	38A TO 38K	1070	L3x3x¼ / L4x3x¼	⅜	3	3½	9	4½	30
50A TO 50G	670	50A TO 50H	840	L3x3x¼ / L4x3x¼	½	2¼	3	6¾	3⅜	60
50A TO 50K	1140	50A TO 50K	1120	L6x4x⅜	½	4	4¾	12	6	60
63A TO 63K	1140	63A TO 63K	1070	L6x4x⅜	⅝	2¾	3⅝	8¼	4⅛	90
63A TO 63K	1140	63A TO 63N	2040	L6x4x⅜	⅝	5	5⅞	15	7½	90

SEE DETAIL M0.00 FOR SECTION NOTES

[1] ALLOWABLE LOADS HAVE BEEN INCREASED BY A FACTOR OF 1.2 FOR LOAD COMBINATIONS INCLUDING OVERSTRENGTH, Ω_0, PER ASCE 7-10 SEC. 12.14.3.2.3.

[2] ASTM A36, Fy = 36 KSI

MASON WEST, INC.
1601 E. Miraloma Ave. Placentia, CA 92870
TEL (714) 630 - 0701, www.masonwest.com

Jiefu "Jeff" Zhang, SE
California SE No. S5270

PAGE
M8.41

HANGER INSTALLATION DETAILS WITH ROD STIFFENER FOR MW-PAL-A-CS CONCRETE INSERT IN CONCRETE SLAB OR BEAM

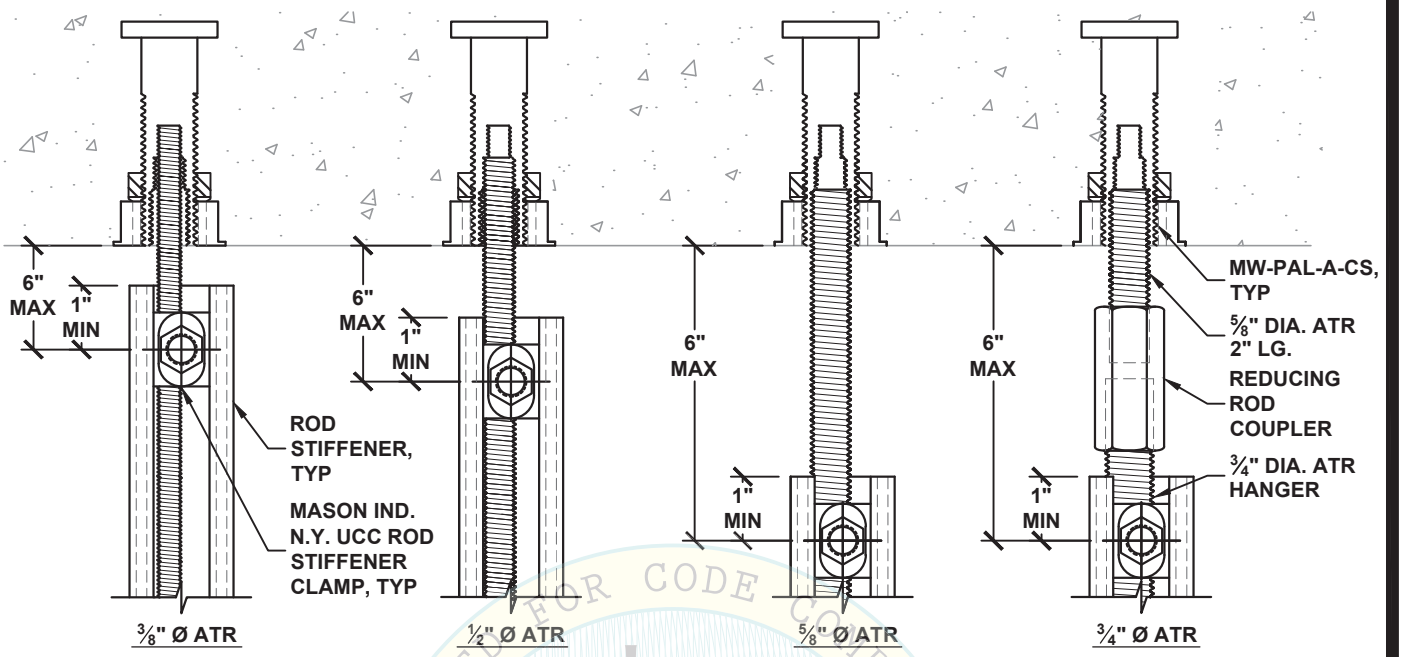

MW-PAL-A-CS CONCRETE INSERT INSTALLED IN CONCRETE SLAB OR BEAM

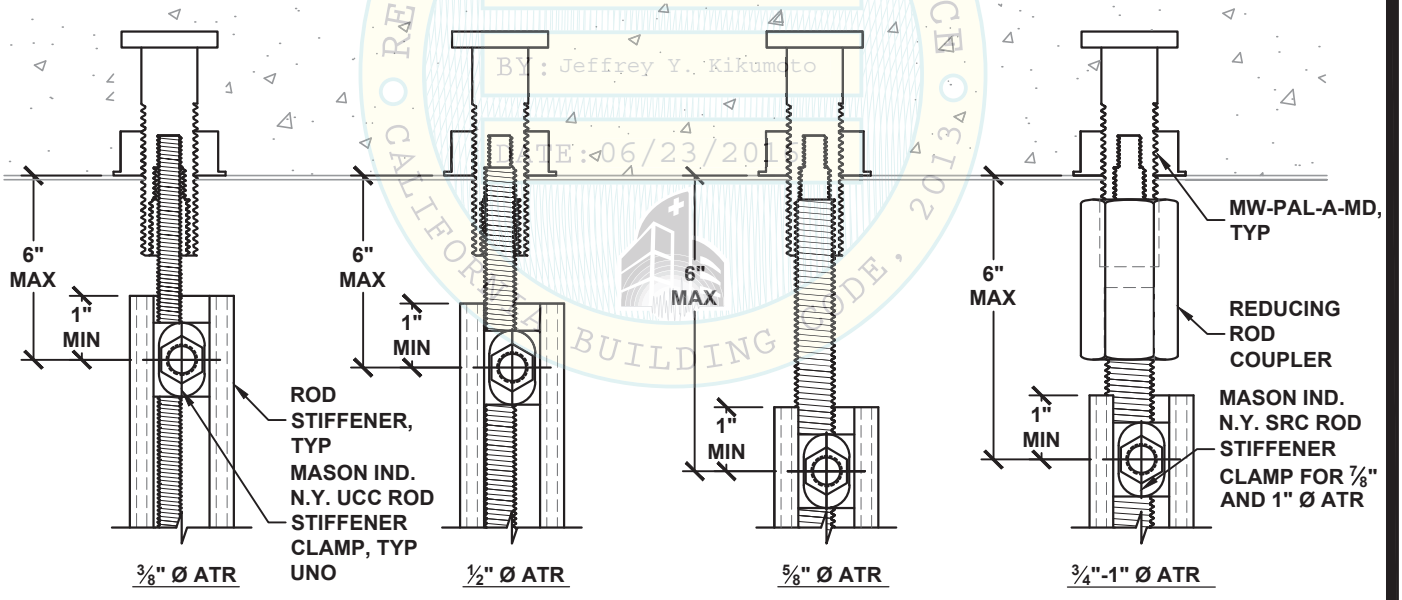

MW-PAL-A-MD CONCRETE INSERT INSTALLED IN CONCRETE FILLED METAL DECK

REVIEWED FOR CODE COMPLIANCE
CALIFORNIA BUILDING CODE, 2013
OPM-0043-13
BY: Jeffrey Y. Kikumoto
DATE: 06/23/2016

MASON WEST, INC.
1601 E. Miraloma Ave. Placentia, CA 92870
TEL (714) 630 - 0701, www.masonwest.com

Jiefu "Jeff" Zhang, SE
California SE No. S5270

PAGE
M10.10

HANGER INSTALLATION DETAILS WITH ROD STIFFENER FOR EXPANSION ANCHOR

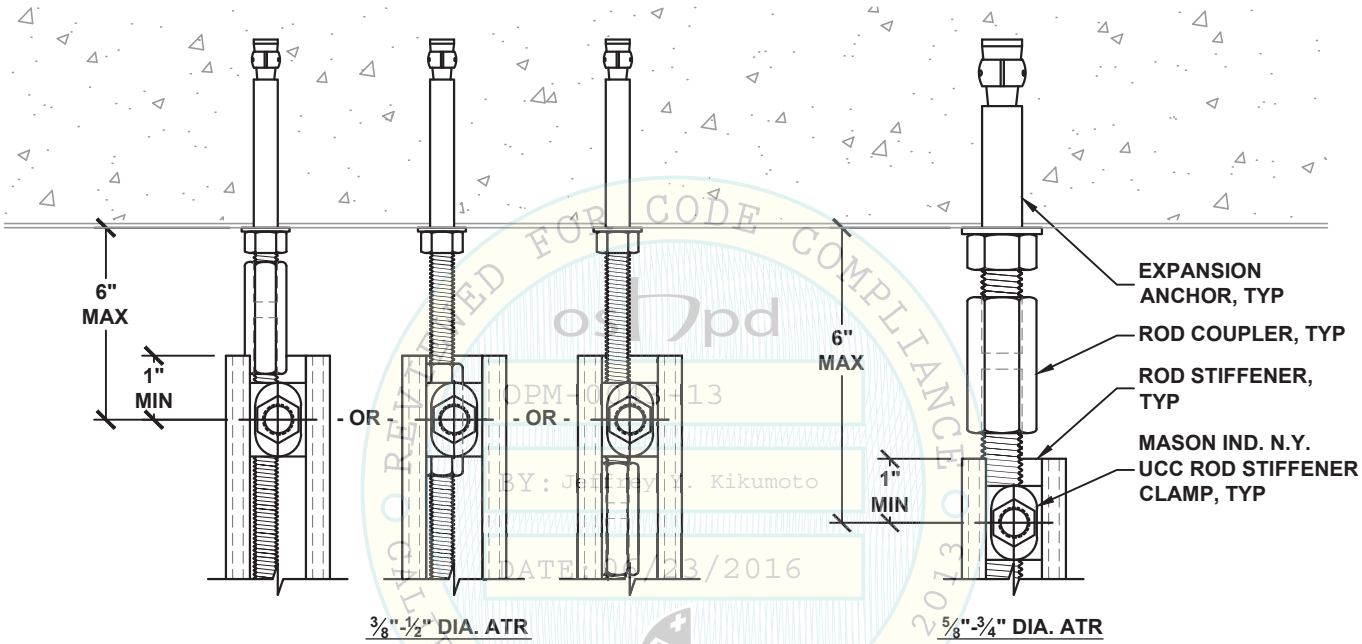

EXPANSION ANCHOR INSTALLED AT THE CONCRETE FILLED METAL DECK

REVIEWED FOR CODE COMPLIANCE
OPM-0043-13
BY: Jeffrey M. Kikumoto
DATE: 06/23/2016
CALIFORNIA BUILDING CODE 2013

MASON WEST, INC.
1601 E. Miraloma Ave. Placentia, CA 92870
TEL (714) 630 - 0701, www.masonwest.com

Jiefu "Jeff" Zhang, SE
California SE No. S5270

PAGE
M10.11

HANGER INSTALLATION DETAILS WITH ROD STIFFENER FOR STEEL OR WOOD ATTACHMENTS

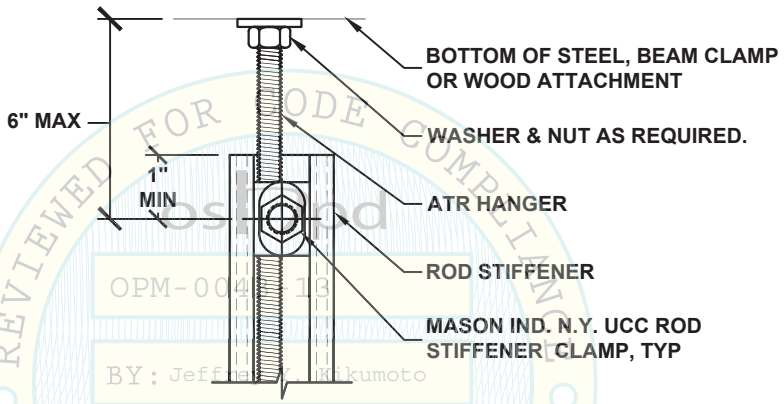

REVIEWED FOR CODE COMPLIANCE
CALIFORNIA BUILDING CODE, 2013
OPM-0043-13
BY: Jeffrey Kikumoto
DATE: 06/23/2016

MASON WEST, INC.
1601 E. Miraloma Ave. Placentia, CA 92870
TEL (714) 630 - 0701, www.masonwest.com

Jiefu "Jeff" Zhang, SE
California SE No. S5270

PAGE
M10.12

BRACE BRACKET DESIGNATION, ATTACHMENT AND SECTION NOTES

BRACE ANCHOR SIZE	
DESIGNATION	DIAMETER (INCH)
38	3/8
50	1/2
63	5/8
75	3/4
88	7/8
100	1
125	1 1/4

HORIZONTAL LOAD RATING	
DESIGNATION	MAXIMUM ALLOWABLE LOAD (LBS)
A	75
B	125
C	175
D	250
E	350
F	450
G	575
H	700
J	850
K	1000
L	1250
M	1600
N	2000
P	2500
Q	3500
R	5000
S	7500
T	11000

NOTES:

1 - "N" SERIES PAGES ARE COMPRISED OF SEISMIC BRACE BRACKET ANCHORAGE CAPACITIES FOR VARIOUS TYPES OF ANCHORAGE CONDITIONS. EACH BRACE BRACKET ATTACHMENT TYPE IS DESIGNATED BY A SET OF NUMBERS AND A LETTER. THE NUMBERS REPRESENTS THE BRACE BRACKET ATTACHMENT SIZE (FOUND IN THE BRACE ANCHOR SIZE TABLE) AND THE LETTER REPRESENTS THE MAXIMUM ALLOWABLE HORIZONTAL LOAD CAPACITY (FOUND IN THE HORIZONTAL LOAD RATING TABLE).

LEGEND (HANGER ATTACHMENT TYPE)

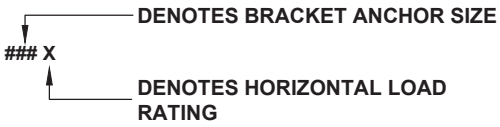

EXAMPLE: 63L REPRESENTS BRACE BRACKET ANCHOR SIZE OF 5/8"Ø WITH A MAXIMUM HORIZONTAL LOAD RATING OF 1,250 LBS.

2 - BRACE BRACKET ANCHORAGE ATTACHMENTS TO STRUCTURE MAY BE USED WITH ANY ONE OF "N" SERIES PAGES, PROVIDED BRACE BRACKET ATTACHMENT SIZE IS APPROPRIATE FOR THE APPLICATION AND THE ALLOWABLE HORIZONTAL LOAD CAPACITY IS MET.

3 - STRUCTURAL ENGINEER OF RECORD TO VERIFY ADEQUACY OF THE STRUCTURE FOR THE TABULATED LOADS.

4 - THREADED ROD ENGAGEMENT INTO MW-PAL-A-CS AND MW-PAL-A-MD SHALL BE MINIMUM OF ONE ROD DIAMETER. ROD INSTALLATION TO MW-PAL-A-CS AND MW-PAL-A-MD SHALL BE SNUG TIGHT.

5 - WHEN CONCRETE ANCHORS ARE INSTALLED AT THE BOTTOM OF THE CONCRETE FILLED METAL DECK, MINIMUM END DISTANCE AND SPACING REQUIREMENTS ARE ALONG FLUTE LENGTH ONLY.

6 - SEE X7.0 AND X7.1 FOR STRUT MEMBER DATA.

7 - ALL CONCRETE FLAT SLABS, WALLS, AND BEAMS MUST HAVE A MINIMUM OF #4 BAR OR GREATER BETWEEN THE ANCHOR AND THE EDGE OF CONCRETE.

8 - ON PAGES N1.XX AND N2.XX, THE DESIGN PROFESSIONAL SHALL USE THE ALLOWABLE LATERAL LOADS UNDER OVERSTRENGTH FACTOR Ω_0 =2.5 UNLESS THE LATERAL SUPPORT COMPLIES WITH ONE OF THE CONDITIONS LISTED IN ACI 318-11 APPENDIX D, SECTION D.3.3.4.3.

9 - POST-INSTALLED ANCHORS MAY BE INSTALLED A MINIMUM OF 3 BOLT DIAMETERS AWAY FROM ABANDONED HOLES, AND A MINIMUM OF 1.5 BOLT DIAMETERS FROM DRYPACK MORTAR FILLED HOLES. DRYPACK MORTAR SHALL HAVE A COMPRESSIVE STRENGTH EQUAL TO OR GREATER THAN THE CONCRETE STRENGTH IN WHICH IT IS BEING USED.

OSHPD PREAPPROVED OPM-0043-13 Reviewed for Code Compliance by Jeffrey Y. Kikumoto DATE 06/23/2016

MASON WEST, INC.
1601 E. Miraloma Ave. Placentia, CA 92870
TEL (714) 630 - 0701, www.masonwest.com

Jiefu "Jeff" Zhang, SE
California SE No. S5270

PAGE
N0.00

SEISMIC BRACKET ATTACHMENT TO CONCRETE SLAB, BEAM OR WALL WITH (1) MW-PAL-A-CS CONCRETE INSERT

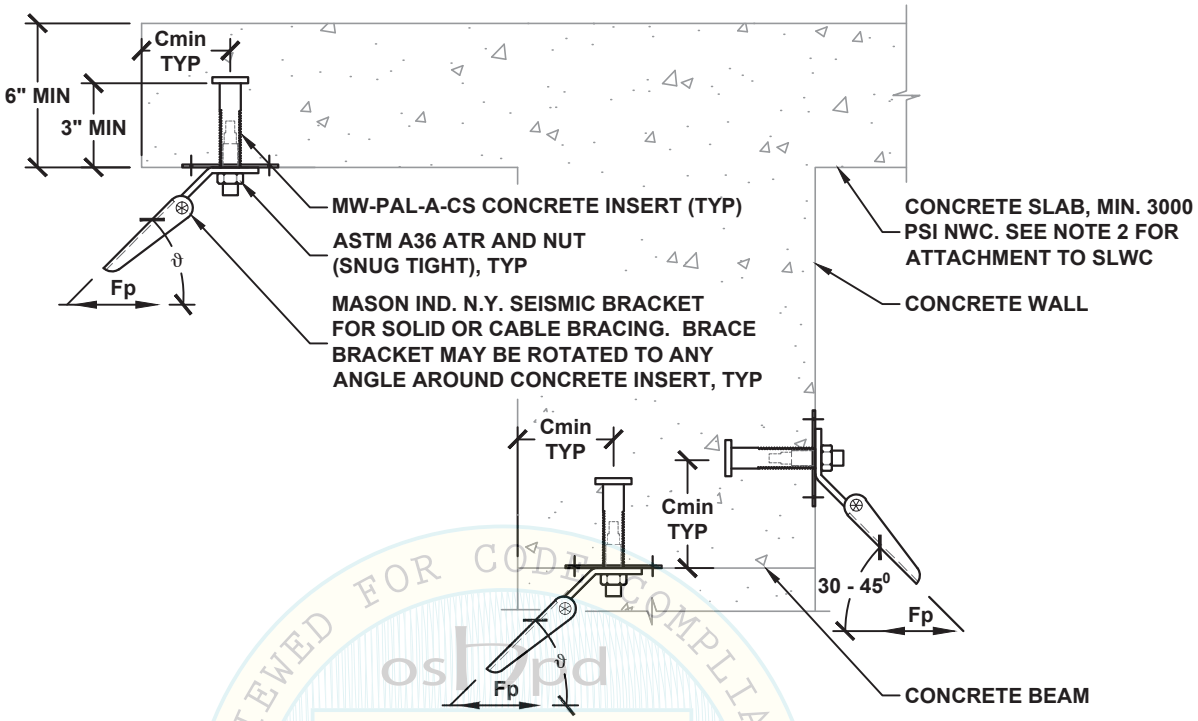

REVIEWED FOR CODE COMPLIANCE
CALIFORNIA BUILDING CODE 2013
oshpd
OPM-0043-13
BY: Jeffrey Y. Kikumoto
DATE: 06/23/2016

BRACE BRACKET ATTACHMENT TYPE	ALLOWABLE LATERAL LOAD Fp [2] LBS	$\Omega_0 = 2.5$[1] BRACE BRACKET ATTACHMENT TYPE	ALLOWABLE LATERAL LOAD Fp [2] LBS	MAX BRACE RANGE ϑ	ATR DIA. INCH	MW-PAL-A-CS CONCRETE INSERT (REFER TO PAGES X5.0.CS & X5.2.1) DIA. da (INCH)	MIN. EDGE Cmin (INCH)	MIN. SPACING Smin (INCH)
38A TO 38J	910	38A TO 38E	440	30°- 45°	3/8	7/8	6	12
38A TO 38H	700	38A TO 38D	330	46°- 60°	3/8			
50A TO 50L	1360	50A TO 50G	650	30°- 45°	1/2			
50A TO 50K	1020	50A TO 50F	490	46°- 60°	1/2			
63A TO 63L	1410	63A TO 63G	680	30°- 45°	5/8			
63A TO 63K	1050	63A TO 63F	500	46°- 60°	5/8			
63A TO 63M	1710	63A TO 63H	820	30°- 45°	5/8	7/8	9	12
63A TO 63K	1210	63A TO 63G	580	46°- 60°	5/8			

SEE DETAIL N0.00 FOR SECTION NOTES

[1] OVERSTRENGTH FACTOR AS REQUIRED FOR ANCHORAGE TO CONCRETE.

[2] FOR SLWC SLAB AND BEAM, REDUCE ALLOWABLE LATERAL LOAD BY MULTIPLYING ALLOWABLE LOAD BY A FACTOR OF 0.85.

MASON WEST, INC.
1601 E. Miraloma Ave. Placentia, CA 92870
TEL (714) 630 - 0701, www.masonwest.com

Jiefu "Jeff" Zhang, SE
California SE No. S5270

PAGE
N1.10

SEISMIC BRACKET ATTACHMENT TO CONCRETE SLAB, BEAM OR WALL WITH (2) MW-PAL-A-CS CONCRETE INSERTS

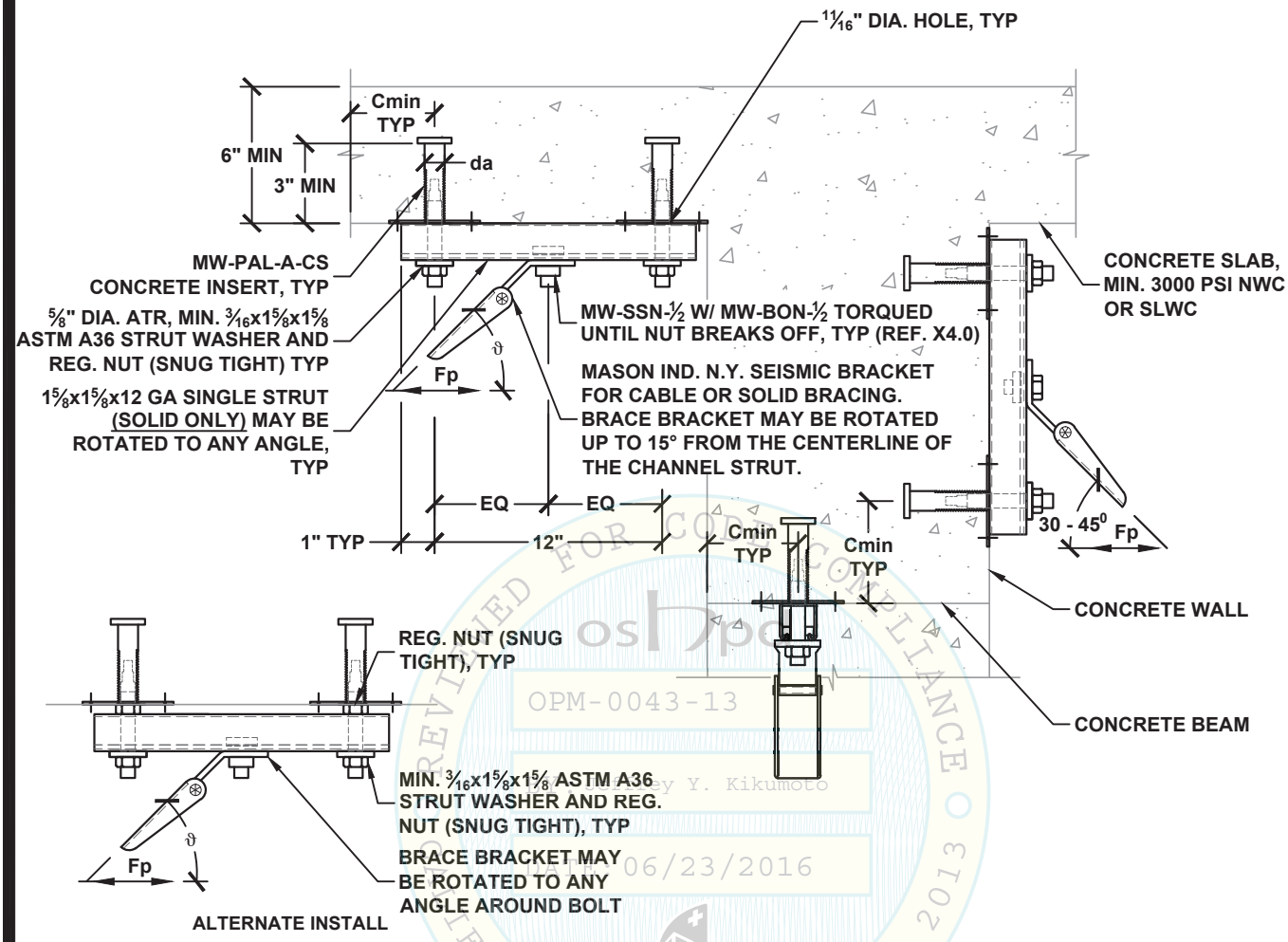

OPM-0043-13
Reviewed for Code Compliance by Jeffrey Y. Kikumoto
Date: 06/23/2016

BRACE BRACKET ATTACHMENT TYPE	ALLOWABLE LATERAL LOAD Fp LBS	$\Omega_0 = 2.5$[1] BRACE BRACKET ATTACHMENT TYPE	ALLOWABLE LATERAL LOAD Fp LBS	MAX BRACE RANGE ϑ	MW-PAL-A-CS CONCRETE INSERT (REFER TO PAGES X5.0.CS & X5.2.1) DIA. da (INCH)	MIN. EDGE Cmin (INCH)	MIN. SPACING Smin (INCH)
50A TO 50G	620	50A TO 50G	520	30°- 45°	7/8	6	12
50A TO 50F	530	50A TO 50F	530	46°- 60°			

SEE DETAIL N0.00 FOR SECTION NOTES

[1] OVERSTRENGTH FACTOR AS REQUIRED FOR ANCHORAGE TO CONCRETE.

MASON WEST, INC.
1601 E. Miraloma Ave. Placentia, CA 92870
TEL (714) 630 - 0701, www.masonwest.com

Jiefu "Jeff" Zhang, SE
California SE No. S5270

PAGE
N1.12

SEISMIC BRACKET ATTACHMENT TO CONCRETE SLAB, BEAM OR WALL WITH (2) MW-PAL-A-CS CONCRETE INSERTS

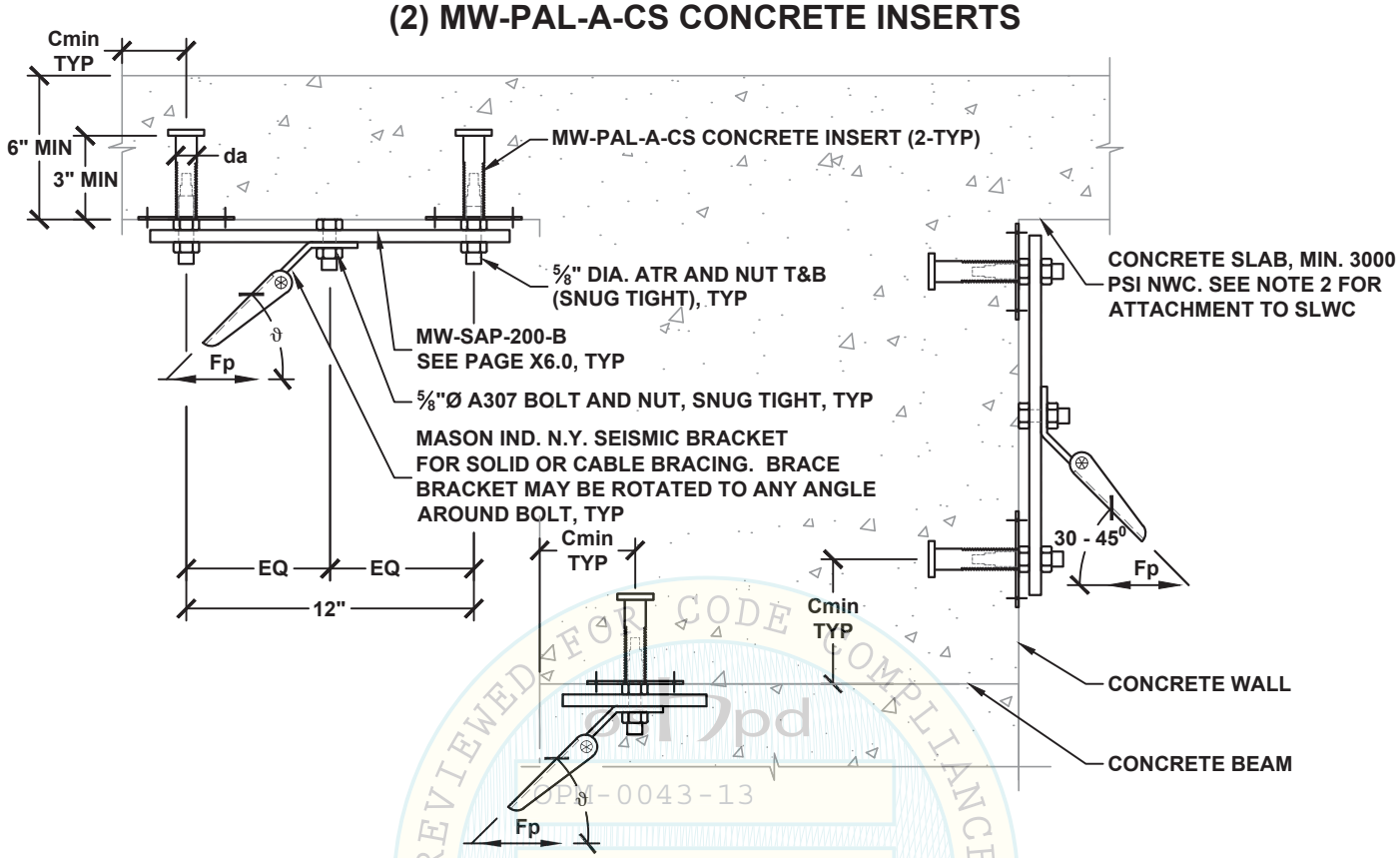

BRACE BRACKET ATTACHMENT TYPE	ALLOWABLE LATERAL LOAD Fp LBS	$\Omega_0 = 2.5^1$ BRACE BRACKET ATTACHMENT TYPE	$\Omega_0 = 2.5^1$ ALLOWABLE LATERAL LOAD Fp [2] LBS	MAX BRACE RANGE ϑ	MW-PAL-A-CS CONCRETE INSERT (REFER TO PAGES X5.0.CS & X5.2.1) DIA. da (INCH)	MIN. EDGE Cmin (INCH)	MIN. SPACING Smin (INCH)
63A TO 63M	1930	63A TO 63M	1640	30°- 45°	⅞	9	12
63A TO 63K	1110	63A TO 63K	1110	46°- 60°			

SEE DETAIL N0.00 FOR SECTION NOTES

[1] OVERSTRENGTH FACTOR AS REQUIRED FOR ANCHORAGE TO CONCRETE.

[2] FOR BRACE BRACKET ATTACHMENTS WITH OVERSTRENGTH FACTOR TO SLWC SLAB AND BEAM, REDUCE ALLOWABLE LATERAL LOAD MULTIPLYING ALLOWABLE LOAD BY A FACTOR OF 0.85.

REVIEWED FOR CODE COMPLIANCE
CALIFORNIA BUILDING CODE, 2013
OPM-0043-13
BY: Jeffrey Y. Kikumoto
DATE: 06/23/2016

MASON WEST, INC.
1601 E. Miraloma Ave. Placentia, CA 92870
TEL (714) 630 - 0701, www.masonwest.com

Jiefu "Jeff" Zhang, SE
California SE No. S5270

PAGE
N1.13

SEISMIC BRACKET ATTACHMENT TO CONCRETE SLAB, BEAM OR WALL WITH (4) MW-PAL-A-CS CONCRETE INSERTS

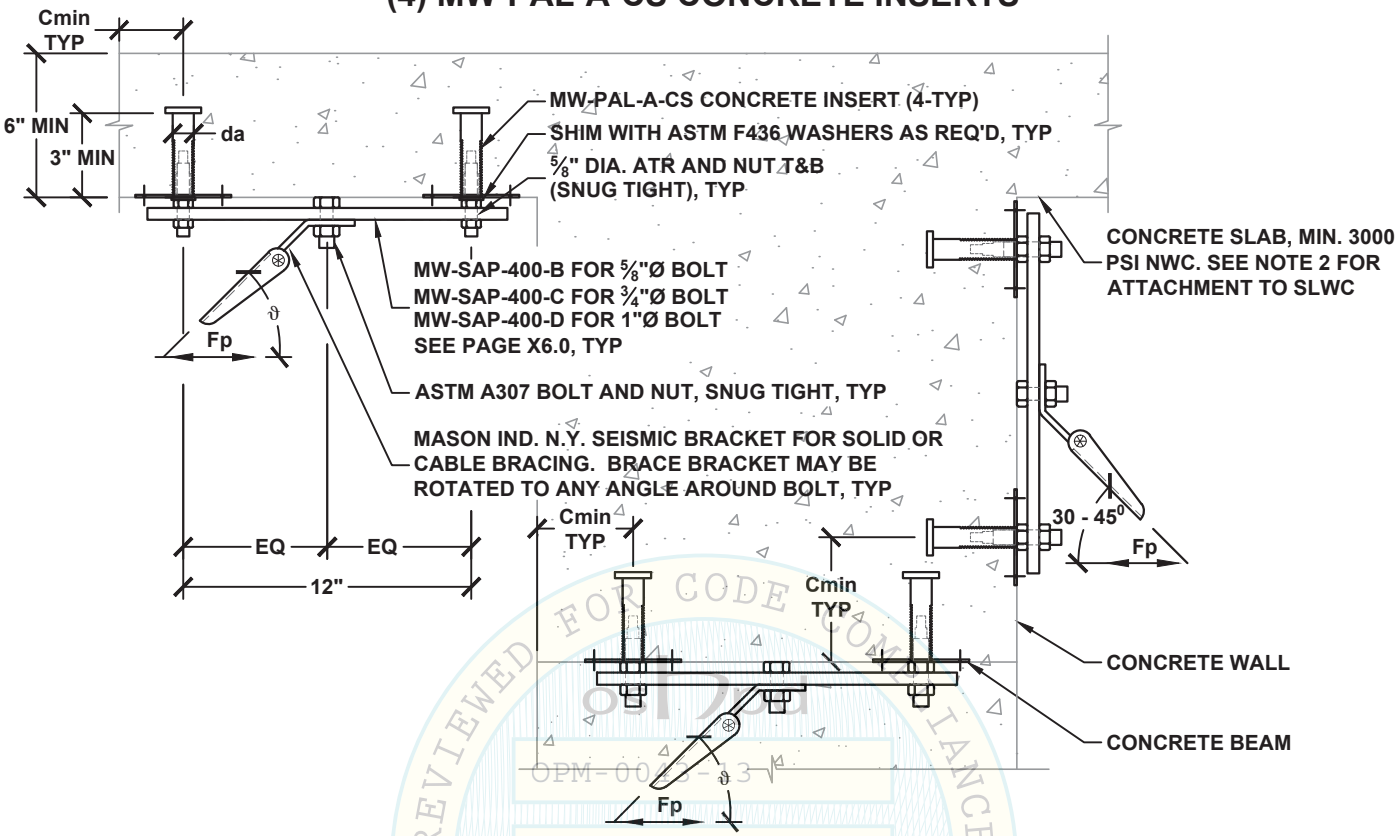

REVIEWED FOR CODE COMPLIANCE
OSTP
OPM-0043-13
BY: Jeffrey Y. Kikumoto
DATE: 06/23/2016
CALIFORNIA BUILDING CODE 2013

BRACE BRACKET ATTACHMENT TYPE	ALLOWABLE LATERAL LOAD Fp LBS	$\Omega_0 = 2.5$[1] BRACE BRACKET ATTACHMENT TYPE	$\Omega_0 = 2.5$[1] ALLOWABLE LATERAL LOAD Fp [2] LBS	MAX BRACE RANGE ϑ	BOLT DIA. INCH	MW-PAL-A-CS CONCRETE INSERT (REFER TO PAGES X5.0.CS & X5.2.1) DIA. da (INCH)	MIN. EDGE Cmin (INCH)	MIN. SPACING Smin (INCH)
63A TO 63P	3080	63A TO 63P	3080	30°- 45°	5/8	7/8	9	12
63A TO 63N	2080	63A TO 63N	2080	46°- 60°	5/8			
75A TO 75Q	3500	75A TO 75P	3290	30°- 45°	3/4			
75A TO 75N	2020	75A TO 75N	2020	46°- 60°	3/4			
100A TO 100Q	3500	100A TO 100P	3290	30°- 45°	1			
100A TO 100N	2020	100A TO 100N	2020	46°- 60°	1			

SEE DETAIL N0.00 FOR SECTION NOTES

[1] OVERSTRENGTH FACTOR AS REQUIRED FOR ANCHORAGE TO CONCRETE.

[2] FOR BRACE BRACKET ATTACHMENTS WITH OVERSTRENGTH FACTOR TO SLWC SLAB AND BEAM, THE ALLOWABLE LATERAL LOAD SHALL BE TAKEN AS 2790 LBS FOR 30°-45° MAX BRACE RANGE AND 1970 LBS FOR 46°-60° MAX BRACE RANGE.

MASON WEST, INC.
1601 E. Miraloma Ave. Placentia, CA 92870
TEL (714) 630 - 0701, www.masonwest.com

Jiefu "Jeff" Zhang, SE
California SE No. S5270

PAGE
N1.14

SEISMIC BRACKET ATTACHMENT TO CONCRETE SLAB, BEAM OR WALL WITH (1) HILTI KB-TZ CONCRETE ANCHOR

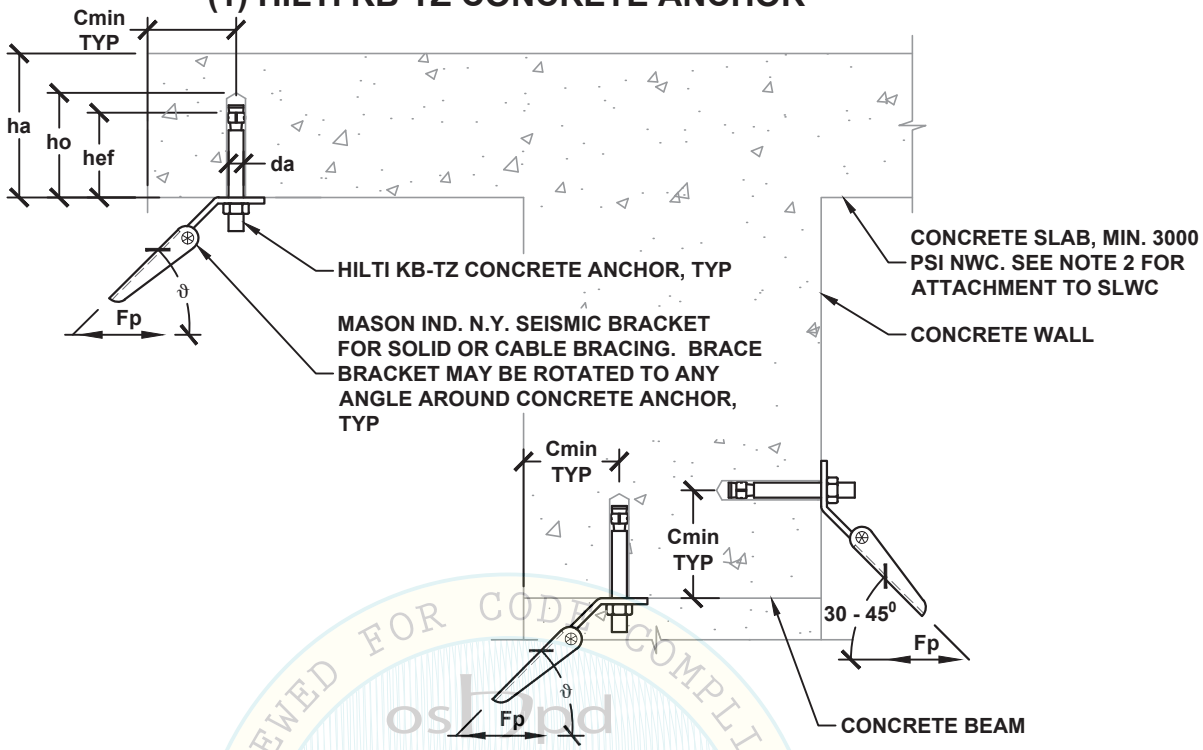

BRACE BRACKET ATTACHMENT TYPE	ALLOWABLE LATERAL LOAD Fp [2] LBS	$\Omega_0 = 2.5$[1] BRACE BRACKET ATTACHMENT TYPE	$\Omega_0 = 2.5$[1] ALLOWABLE LATERAL LOAD Fp [2] LBS	MAX BRACE RANGE ϑ	HILTI KB-TZ CONCRETE ANCHOR (ICC ESR-1917) SPECIAL INSPECTION REQ'D DIA. da INCH	MIN. EFF. EMBED. hef INCH	MIN. HOLE DEPTH ho INCH	MIN. BASE TH. ha INCH	MIN. EDGE Cmin INCH	MIN. SPACING Smin INCH	TORQUE REQ'D FT-LBS
38A TO 38D	340	38A TO 38D	270	30°- 45°	⅜	2	2⅝	4	4½	6	25
38A TO 38C	200	38A TO 38C	190	46°- 60°							
50A TO 50E	370	50A TO 50D	310	30°- 45°	½	2	2⅝	4	4½	6	40
50A TO 50C	220	50A TO 50C	210	46°- 60°							
50A TO 50H	750	50A TO 50G	610	30°- 45°	½	3¼	4	6	6	9¾	40
50A TO 50F	450	50A TO 50E	430	46°- 60°							
63A TO 63H	740	63A TO 63G	610	30°- 45°	⅝	3⅛	3¾	5	6	9⅜	60
63A TO 63E	440	63A TO 63E	420	46°- 60°							
63A TO 63K	1040	63A TO 63H	840	30°- 45°	⅝	4	4¾	6	12	12	60
63A TO 63G	620	63A TO 63G	590	46°- 60°							
75A TO 75K	1050	75A TO 75J	930	30°- 45°	¾	3¾	4⅝	6	12	11¼	110
75A TO 75G	600	75A TO 75G	610	46°- 60°							

SEE DETAIL N0.00 FOR SECTION NOTES

[1] OVERSTRENGTH FACTOR AS REQUIRED FOR ANCHORAGE TO CONCRETE.

[2] FOR SLWC SLAB AND BEAM, REDUCE ALLOWABLE LATERAL LOAD BY MULTIPLYING ALLOWABLE LOAD BY A FACTOR OF 0.6.

[3] EDGE DISTANCE PERPENDICULAR TO Cmin SHALL BE 1.5*Cmin, MINIMUM.

OPM-0043-13
BY: Jeffrey Y. Kikumoto
DATE: 06/23/2016
REVIEWED FOR CODE COMPLIANCE
ORANGE COUNTY BUILDING CODE, 2013

MASON WEST, INC.
1601 E. Miraloma Ave. Placentia, CA 92870
TEL (714) 630 - 0701, www.masonwest.com

Jiefu "Jeff" Zhang, SE
California SE No. S5270

PAGE
N1.20

SEISMIC BRACKET ATTACHMENT TO CONCRETE SLAB, BEAM OR WALL WITH (2) HILTI KB-TZ CONCRETE ANCHORS

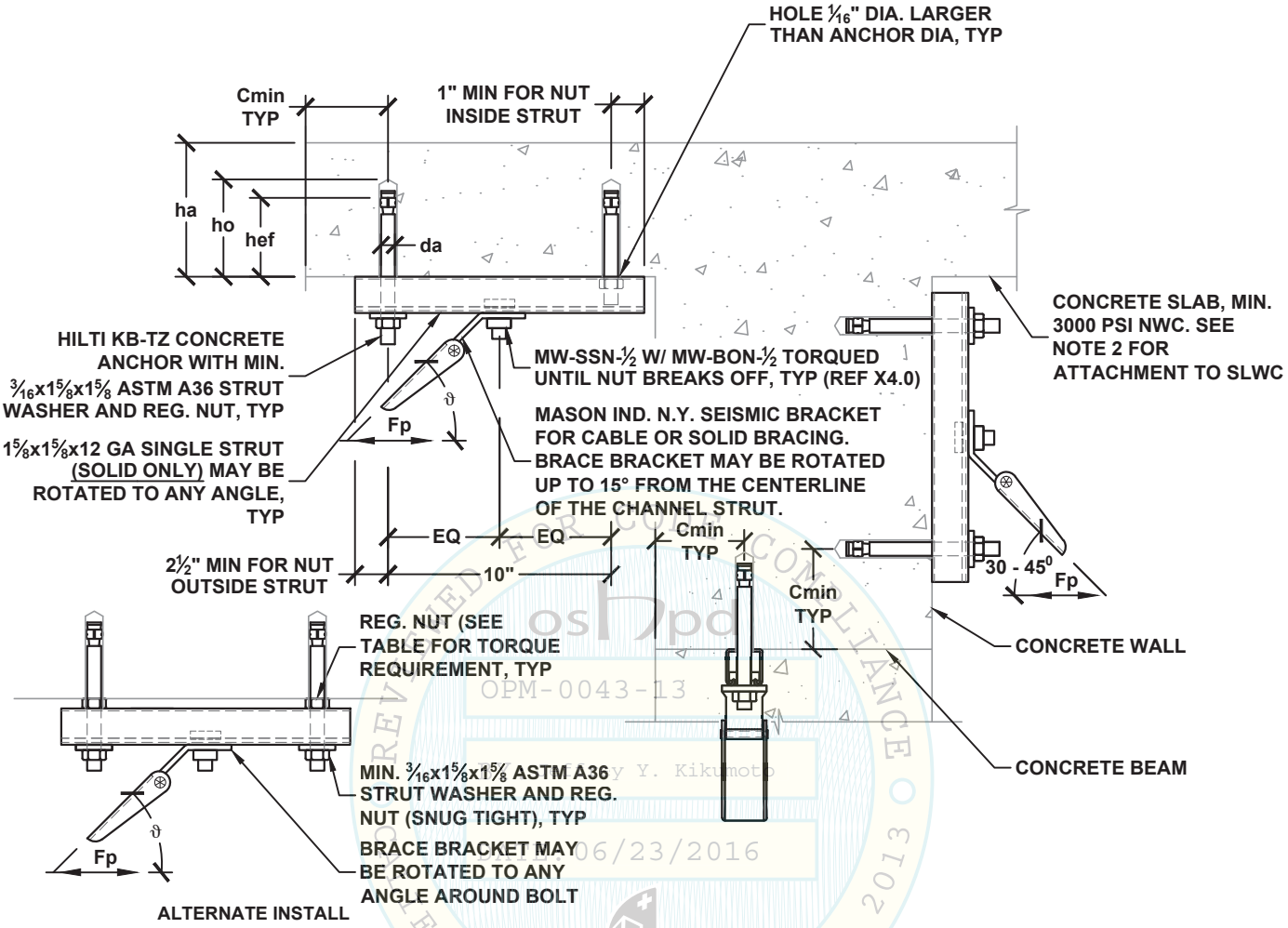

BRACE BRACKET ATTACHMENT TYPE	ALLOWABLE LATERAL LOAD Fp LBS	$\Omega_0 = 2.5^1$ BRACE BRACKET ATTACHMENT TYPE	ALLOWABLE LATERAL LOAD Fp LBS	MAX BRACE RANGE ϑ	HILTI KB-TZ CONCRETE ANCHOR (ICC ESR-1917) SPECIAL INSPECTION REQ'D DIA. da INCH	MIN. EFF. EMBED. hef INCH	MIN. HOLE DEPTH ho INCH	MIN. BASE TH. ha INCH	MIN. EDGE Cmin INCH	MIN. SPACING Smin INCH	TORQUE REQ'D FT-LBS
50A TO 50G	620	50A TO 50E	420	30°- 45°	3/8	2	2 5/8	4	4 1/2	6	25
50A TO 50F	530	50A TO 50D	320	46°- 60°							
50A TO 50G	620	50A TO 50E	420	30°- 45°	1/2	2	2 5/8	4	4 1/2	6	40
50A TO 50F	530	50A TO 50D	320	46°- 60°							

SEE DETAIL N0.00 FOR SECTION NOTES

[1] OVERSTRENGTH FACTOR AS REQUIRED FOR ANCHORAGE TO CONCRETE.

[2] FOR SLWC SLAB AND BEAM, REDUCE ALLOWABLE LATERAL LOAD BY MULTIPLYING ALLOWABLE LOAD BY A FACTOR OF 0.6.

[3] EDGE DISTANCE PERPENDICULAR TO Cmin SHALL BE 1.5*Cmin, MINIMUM.

MASON WEST, INC.
1601 E. Miraloma Ave. Placentia, CA 92870
TEL (714) 630 - 0701, www.masonwest.com

Jiefu "Jeff" Zhang, SE
California SE No. S5270

PAGE
N1.21

OSHPD PREAPPROVED FOR CODE COMPLIANCE CALIFORNIA BUILDING CODE 2013
OPM-0043-13
Reviewed by Y. Kikumoto
06/23/2016

SEISMIC BRACKET ATTACHMENT TO CONCRETE SLAB, BEAM OR WALL WITH (2) HILTI KB-TZ CONCRETE ANCHORS

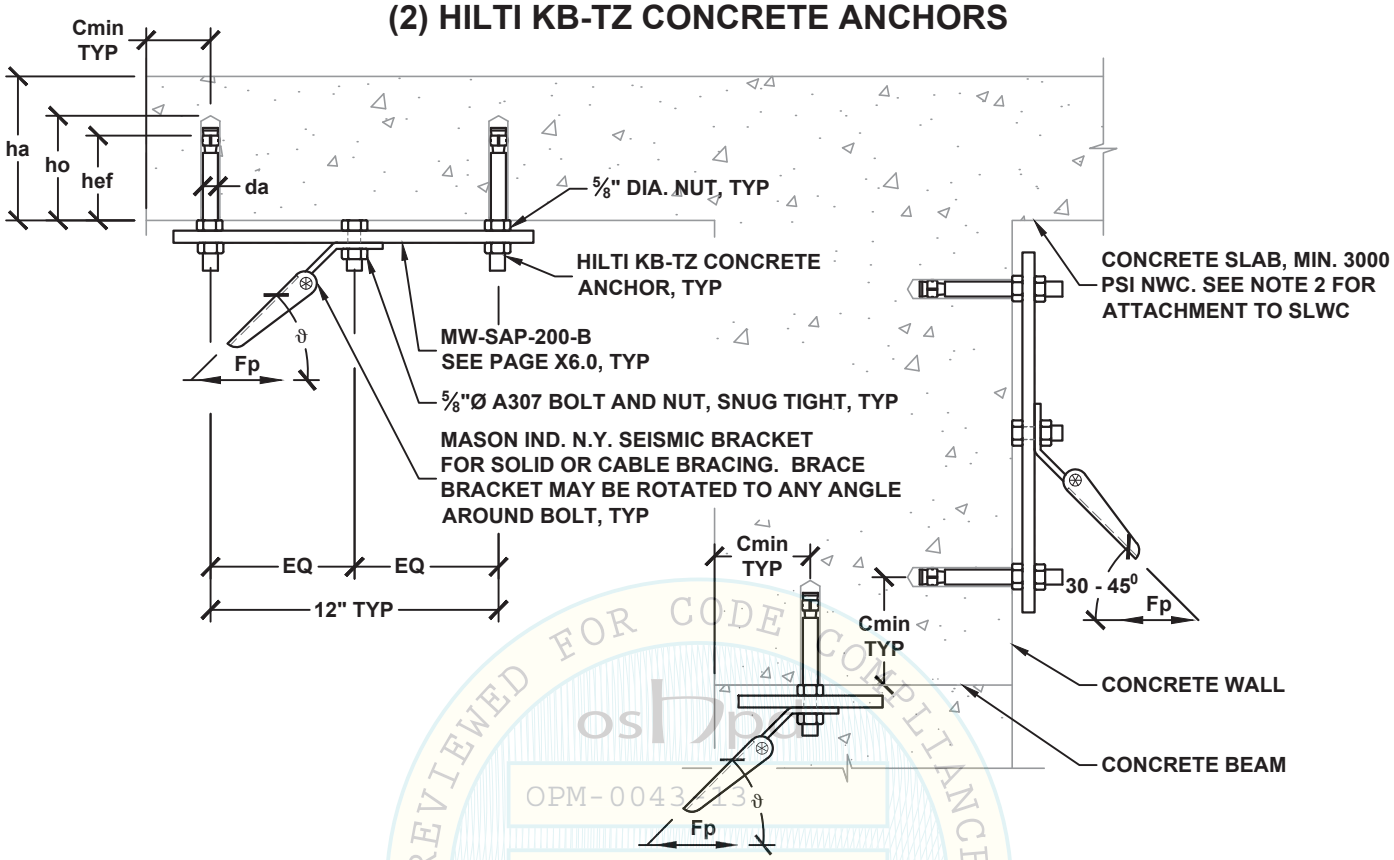

REVIEWED FOR CODE COMPLIANCE
CALIFORNIA BUILDING CODE, 2013
OSHPD
OPM-0043-13
BY: Jeffrey Y. Kikumoto
DATE: 06/23/2016

BRACE BRACKET ATTACHMENT TYPE	ALLOWABLE LATERAL LOAD Fp LBS	Ω_0 = 2.5[1] BRACE BRACKET ATTACHMENT TYPE	Ω_0 = 2.5[1] ALLOWABLE LATERAL LOAD Fp [2] LBS	MAX BRACE RANGE ϑ	HILTI KB-TZ CONCRETE ANCHOR (ICC ESR-1917) SPECIAL INSPECTION REQ'D DIA. da INCH	MIN. EFF. EMBED. hef INCH	MIN. HOLE DEPTH ho INCH	MIN. BASE TH. ha INCH	MIN. EDGE Cmin INCH	MIN. SPACING Smin INCH	TORQUE REQ'D FT-LBS
63A TO 63M	1930	63A TO 63K	1230	30°- 45°	⅝	3⅛	3¾	5	6	9⅜	60
63A TO 63K	1110	63A TO 63J	850	46°- 60°							
63A TO 63M	1930	63A TO 63M	1690	30°- 45°	⅝	4	4¾	6	12	12	60
63A TO 63K	1110	63A TO 63K	1110	46°- 60°							

SEE DETAIL N0.00 FOR SECTION NOTES

[1] OVERSTRENGTH FACTOR AS REQUIRED FOR ANCHORAGE TO CONCRETE.

[2] FOR BRACE BRACKET ATTACHMENTS WITH OVERSTRENGTH FACTOR TO SLWC SLAB AND BEAM, REDUCE ALLOWABLE LATERAL LOAD BY MULTIPLYING ALLOWABLE LOAD BY A FACTOR OF 0.6.

[3] EDGE DISTANCE PERPENDICULAR TO Cmin SHALL BE 1.5*Cmin, MINIMUM.

MASON WEST, INC.
1601 E. Miraloma Ave. Placentia, CA 92870
TEL (714) 630 - 0701, www.masonwest.com

Jiefu "Jeff" Zhang, SE
California SE No. S5270

SEISMIC BRACKET ATTACHMENT TO CONCRETE SLAB, BEAM OR WALL WITH (4) HILTI KB-TZ CONCRETE ANCHORS

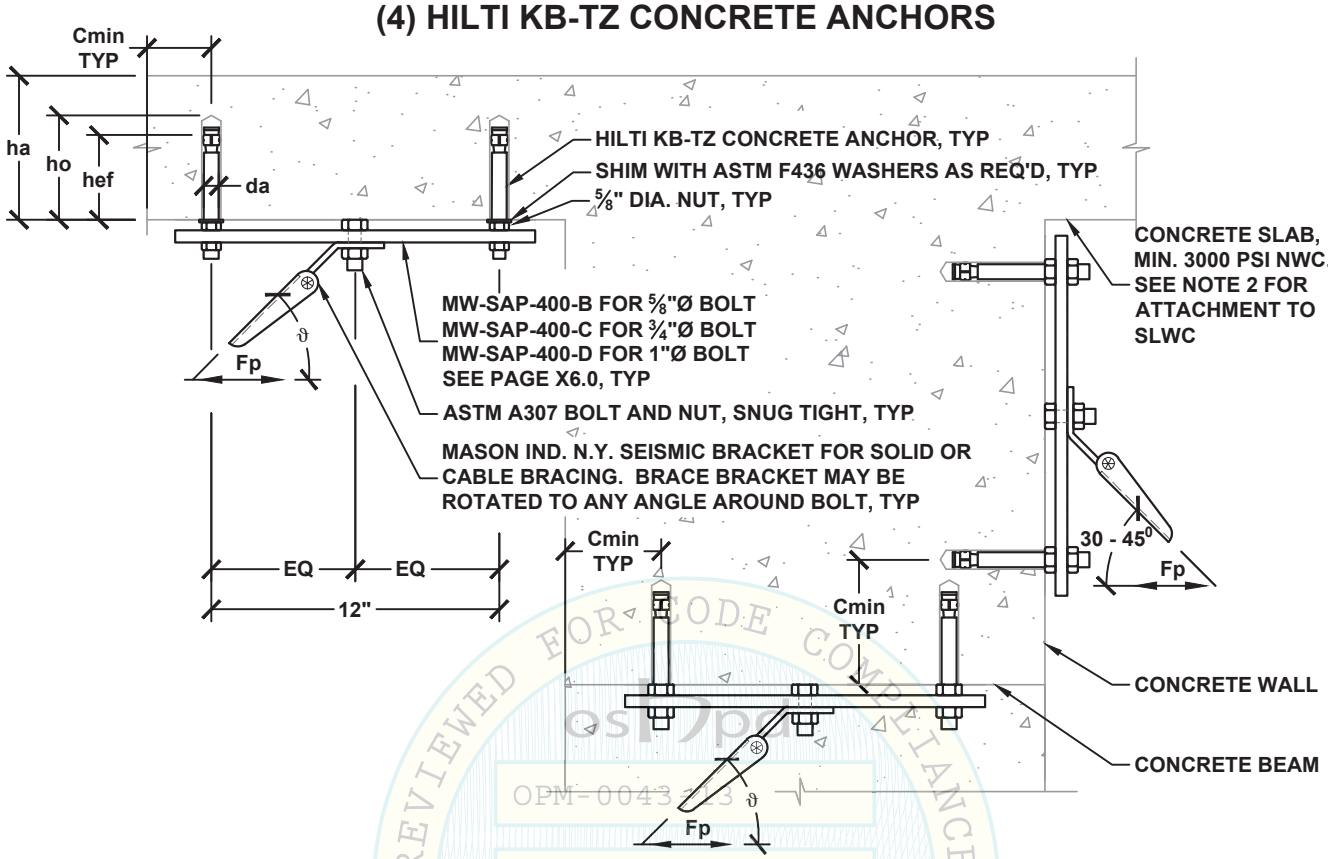

OPM-0043-13
BY: Jeffrey Y. Kikumoto
DATE: 06/23/2016

BRACE BRACKET ATTACHMENT TYPE	ALLOWABLE LATERAL LOAD Fp LBS	$\Omega_0 = 2.5$[1] BRACE BRACKET ATTACHMENT TYPE	$\Omega_0 = 2.5$[1] ALLOWABLE LATERAL LOAD Fp[2] LBS	MAX BRACE RANGE ϑ	BOLT DIA. INCH	HILTI KB-TZ CONCRETE ANCHOR (ICC ESR-1917) SPECIAL INSPECTION REQ'D DIA. da INCH	MIN. EFF. EMBED. hef INCH	MIN. HOLE DEPTH ho INCH	MIN. BASE TH. ha INCH	MIN. EDGE Cmin INCH	MIN. SPACING Smin INCH	TORQUE REQ'D FT-LBS
63A TO 63P	3080	63A TO 63N	2450	30°- 45°	5/8	5/8	3 1/8	3 3/4	5	6	9 3/8	60
63A TO 63N	2080	63A TO 63M	1700	46°- 60°	5/8							
63A TO 63P	3080	63A TO 63P	3080	30°- 45°	5/8	5/8	4	4 3/4	6	12	12	60
63A TO 63N	2080	63A TO 63N	2080	46°- 60°	5/8							
75A TO 75Q	3500	75A TO 75P	3380	30°- 45°	3/4							
75A TO 75N	2020	75A TO 75N	2020	46°- 60°	3/4							
100A TO 100Q	3500	100A TO 100P	3380	30°- 45°	1							
100A TO 100N	2020	100A TO 100N	2020	46°- 60°	1							

SEE DETAIL N0.00 FOR SECTION NOTES

[1] OVERSTRENGTH FACTOR AS REQUIRED FOR ANCHORAGE TO CONCRETE.

[2] FOR BRACE BRACKET ATTACHMENTS WITH OVERSTRENGTH FACTOR TO SLWC SLAB AND BEAM, REDUCE ALLOWABLE LATERAL LOAD BY MULTIPLYING ALLOWABLE LOAD BY A FACTOR OF 0.6.

[3] EDGE DISTANCE PERPENDICULAR TO Cmin SHALL BE 1.5*Cmin, MINIMUM.

MASON WEST, INC.
1601 E. Miraloma Ave. Placentia, CA 92870
TEL (714) 630 - 0701, www.masonwest.com

Jiefu "Jeff" Zhang, SE
California SE No. S5270

PAGE
N1.23

SEISMIC BRACKET ATTACHMENT TO CONCRETE SLAB, BEAM OR WALL WITH (1) POWER-STUD+ SD1 CONCRETE ANCHOR

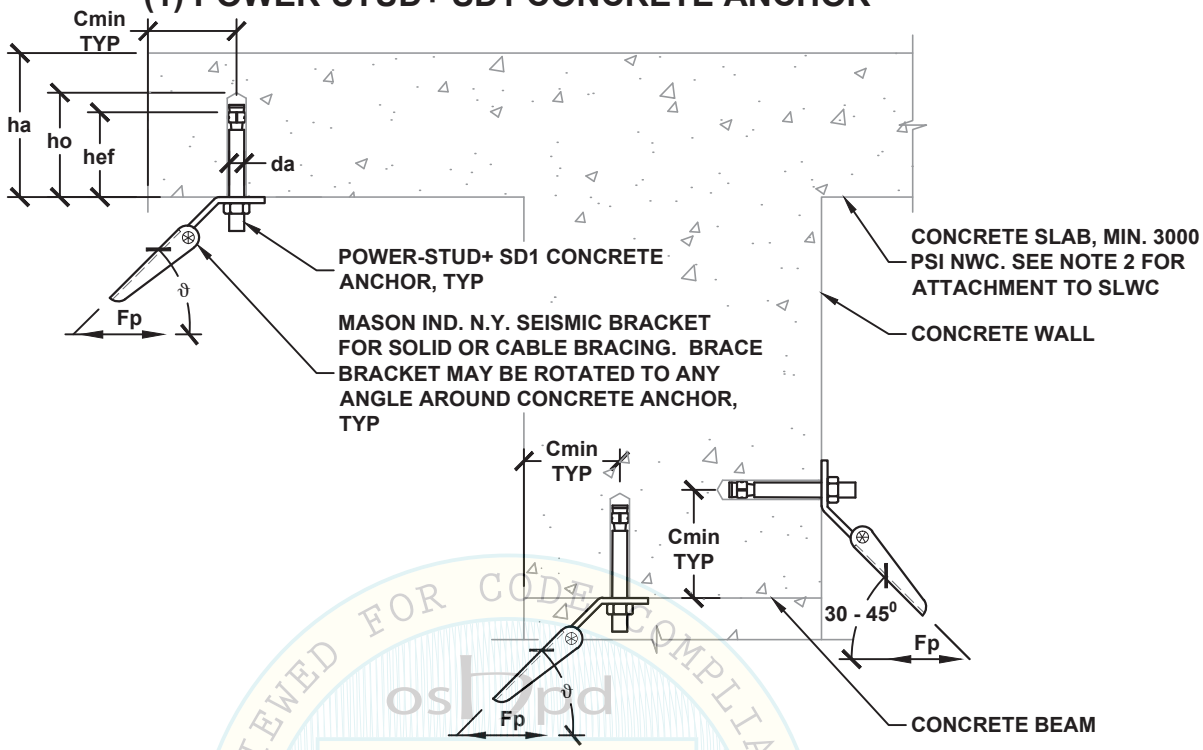

REVIEWED FOR CODE COMPLIANCE
CALIFORNIA BUILDING CODE
oshpd
OPM-0043-13
BY: Jeffrey Y. Kikumoto
DATE: 06/23/2016

BRACE BRACKET ATTACHMENT TYPE	ALLOWABLE LATERAL LOAD Fp LBS	$\Omega_0 = 2.5^1$ BRACE BRACKET ATTACHMENT TYPE	ALLOWABLE LATERAL LOAD Fp LBS	MAX BRACE RANGE ϑ	POWER-STUD+ SD1 CONCRETE ANCHOR (ICC ESR-2818) SPECIAL INSPECTION REQ'D DIA. da INCH	MIN. EFF. EMBED. hef INCH	MIN. HOLE DEPTH ho INCH	MIN. BASE TH. ha INCH	MIN. EDGE Cmin INCH	MIN. SPACING Smin INCH	TORQUE REQ'D FT-LBS
38A TO 38D	300	38A TO 38C	240	30°- 45°	⅜	2	2⅝	4	4½	6	20
38A TO 38C	180	38A TO 38B	170	46°- 60°							
50A TO 50E	400	50A TO 50D	340	30°- 45°	½	3¼	4	6	4½	9¾	40
50A TO 50C	240	50A TO 50C	230	46°- 60°							
63A TO 63G	610	63A TO 63F	510	30°- 45°	⅝	2¾	3¾	6	6	8¼	80
63A TO 63E	360	63A TO 63E	350	46°- 60°							

SEE DETAIL N0.00 FOR SECTION NOTES

[1] OVERSTRENGTH FACTOR AS REQUIRED FOR ANCHORAGE TO CONCRETE.

[2] FOR SLWC SLAB AND BEAM, REDUCE ALLOWABLE LATERAL LOAD BY MULTIPLYING ALLOWABLE LOAD BY A FACTOR OF 0.6.

[3] EDGE DISTANCE PERPENDICULAR TO Cmin SHALL BE 1.5*Cmin, MINIMUM.

MASON WEST, INC.
1601 E. Miraloma Ave. Placentia, CA 92870
TEL (714) 630 - 0701, www.masonwest.com

Jiefu "Jeff" Zhang, SE
California SE No. S5270

PAGE
N1.30

SEISMIC BRACKET ATTACHMENT TO CONCRETE SLAB, BEAM OR WALL WITH (2) POWER-STUD+ SD1 CONCRETE ANCHORS

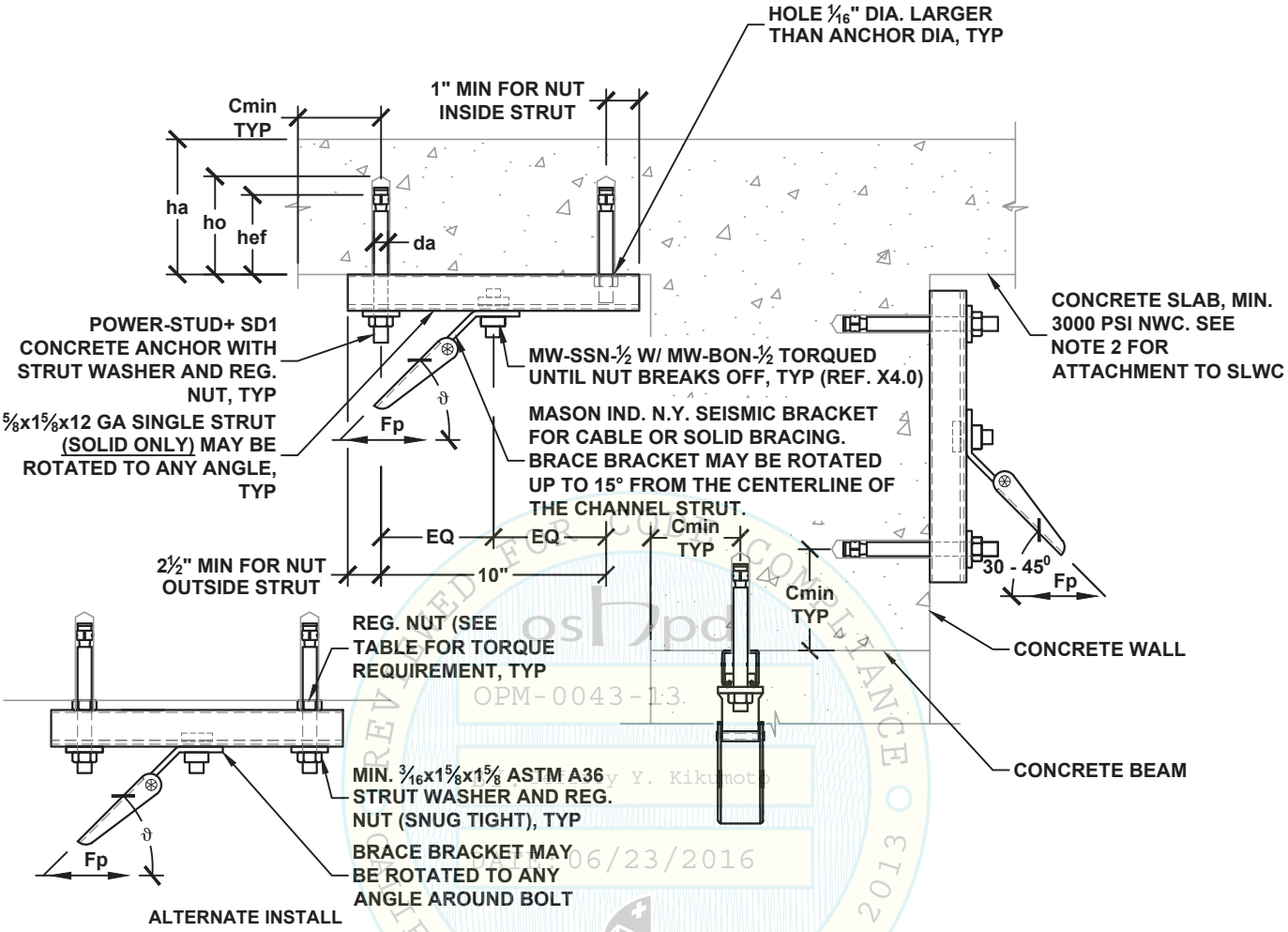

BRACE BRACKET ATTACHMENT TYPE	ALLOWABLE LATERAL LOAD Fp LBS	$\Omega_0 = 2.5$[1] BRACE BRACKET ATTACHMENT TYPE	$\Omega_0 = 2.5$[1] ALLOWABLE LATERAL LOAD Fp LBS	MAX BRACE RANGE ϑ	POWER-STUD+ SD1 CONCRETE ANCHOR (ICC ESR-2818) SPECIAL INSPECTION REQ'D DIA. da INCH	MIN. EFF. EMBED. hef INCH	MIN. HOLE DEPTH ho INCH	MIN. BASE TH. ha INCH	MIN. EDGE Cmin INCH	MIN. SPACING Smin INCH	TORQUE REQ'D FT-LBS
50A TO 50G	620	50A TO 50E	380	30°- 45°	3/8	2	2 5/8	4	4 1/2	6	20
50A TO 50F	530	50A TO 50D	290	46°- 60°							
50A TO 50G	620	50A TO 50E	380	30°- 45°	1/2	3 1/4	4	6	4 1/2	9 3/4	40
50A TO 50F	530	50A TO 50D	290	46°- 60°							

SEE DETAIL N0.00 FOR SECTION NOTES

[1] OVERSTRENGTH FACTOR AS REQUIRED FOR ANCHORAGE TO CONCRETE.

[2] FOR SLWC SLAB AND BEAM, REDUCE ALLOWABLE LATERAL LOAD BY MULTIPLYING ALLOWABLE LOAD BY A FACTOR OF 0.6.

[3] EDGE DISTANCE PERPENDICULAR TO Cmin SHALL BE 1.5*Cmin, MINIMUM.

MASON WEST, INC.
1601 E. Miraloma Ave. Placentia, CA 92870
TEL (714) 630 - 0701, www.masonwest.com

Jiefu "Jeff" Zhang, SE
California SE No. S5270

PAGE **N1.31**

OPM-0043-13 Reviewed for Code Compliance by Jeffrey Kikumoto 06/23/2016

SEISMIC BRACKET ATTACHMENT TO CONCRETE SLAB, BEAM OR WALL WITH (2) POWER-STUD+ SD1 CONCRETE ANCHORS

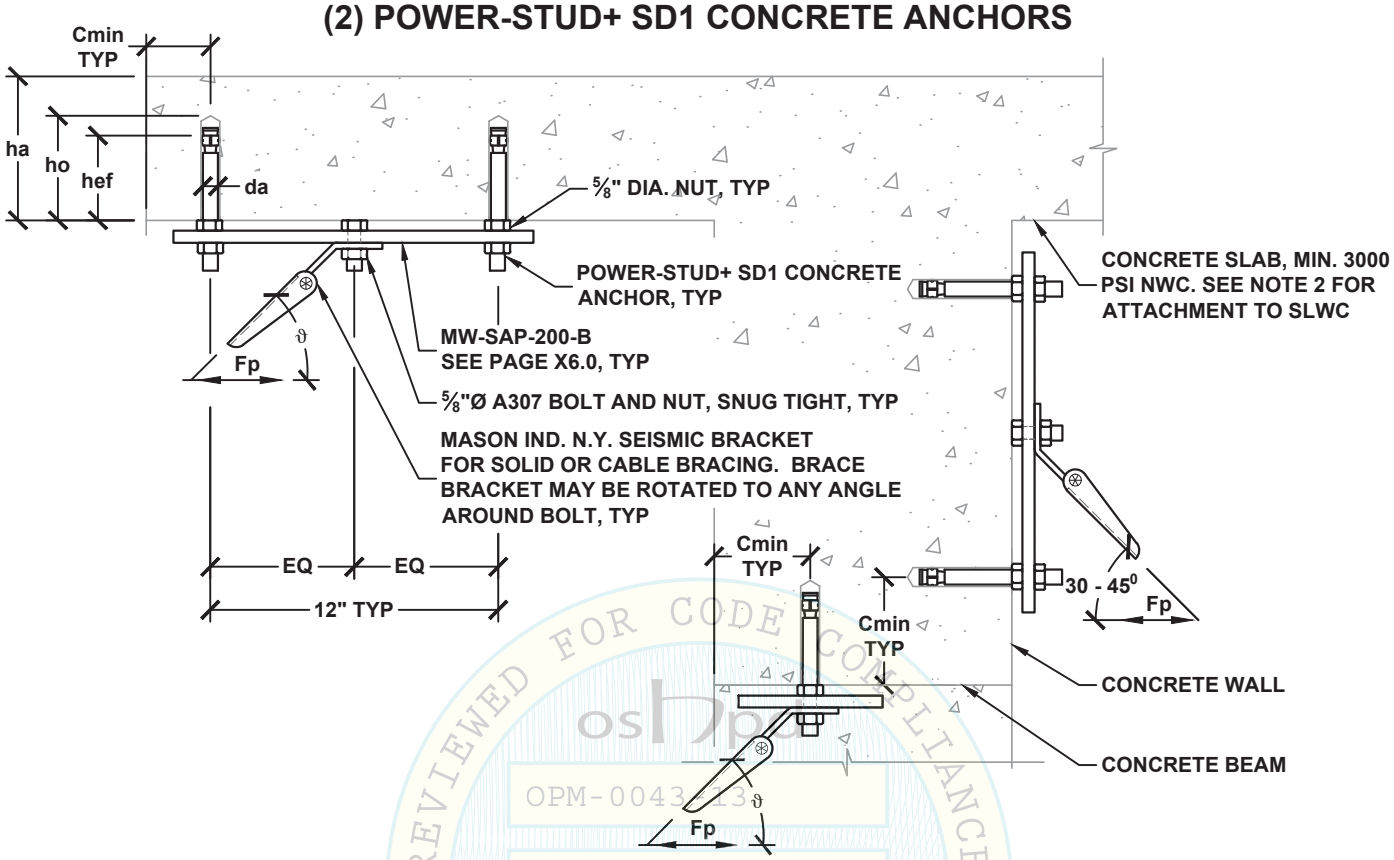

REVIEWED FOR CODE COMPLIANCE
CALIFORNIA BUILDING CODE, 2013
OPM-0043-13
BY: Jeffrey Y. Kikumoto
DATE: 06/23/2016

BRACE BRACKET ATTACHMENT TYPE	ALLOWABLE LATERAL LOAD Fp [2] LBS	Ω_0 = 2.5[1] BRACE BRACKET ATTACHMENT TYPE	Ω_0 = 2.5[1] ALLOWABLE LATERAL LOAD Fp [2] LBS	MAX BRACE RANGE ϑ	POWER-STUD+ SD1 CONCRETE ANCHOR (ICC ESR-2818) SPECIAL INSPECTION REQ'D DIA. da INCH	MIN. EFF. EMBED. hef INCH	MIN. HOLE DEPTH ho INCH	MIN. BASE TH. ha INCH	MIN. EDGE Cmin INCH	MIN. SPACING Smin INCH	TORQUE REQ'D FT-LBS
63A TO 63M	1930	63A TO 63K	1010	30°- 45°	5/8	2 3/4	3 3/4	6	6	8 1/4	80
63A TO 63K	1110	63A TO 63H	700	46°- 60°							

SEE DETAIL N0.00 FOR SECTION NOTES

[1] OVERSTRENGTH FACTOR AS REQUIRED FOR ANCHORAGE TO CONCRETE.

[2] FOR SLWC SLAB AND BEAM, REDUCE ALLOWABLE LATERAL LOAD BY MULTIPLYING ALLOWABLE LOAD BY A FACTOR OF 0.6.

[3] EDGE DISTANCE PERPENDICULAR TO Cmin SHALL BE 1.5*Cmin, MINIMUM.

MASON WEST, INC.
1601 E. Miraloma Ave. Placentia, CA 92870
TEL (714) 630 - 0701, www.masonwest.com

Jiefu "Jeff" Zhang, SE
California SE No. S5270

PAGE
N1.32

SEISMIC BRACKET ATTACHMENT TO CONCRETE SLAB, BEAM OR WALL WITH (4) POWER-STUD+ SD1 CONCRETE ANCHORS

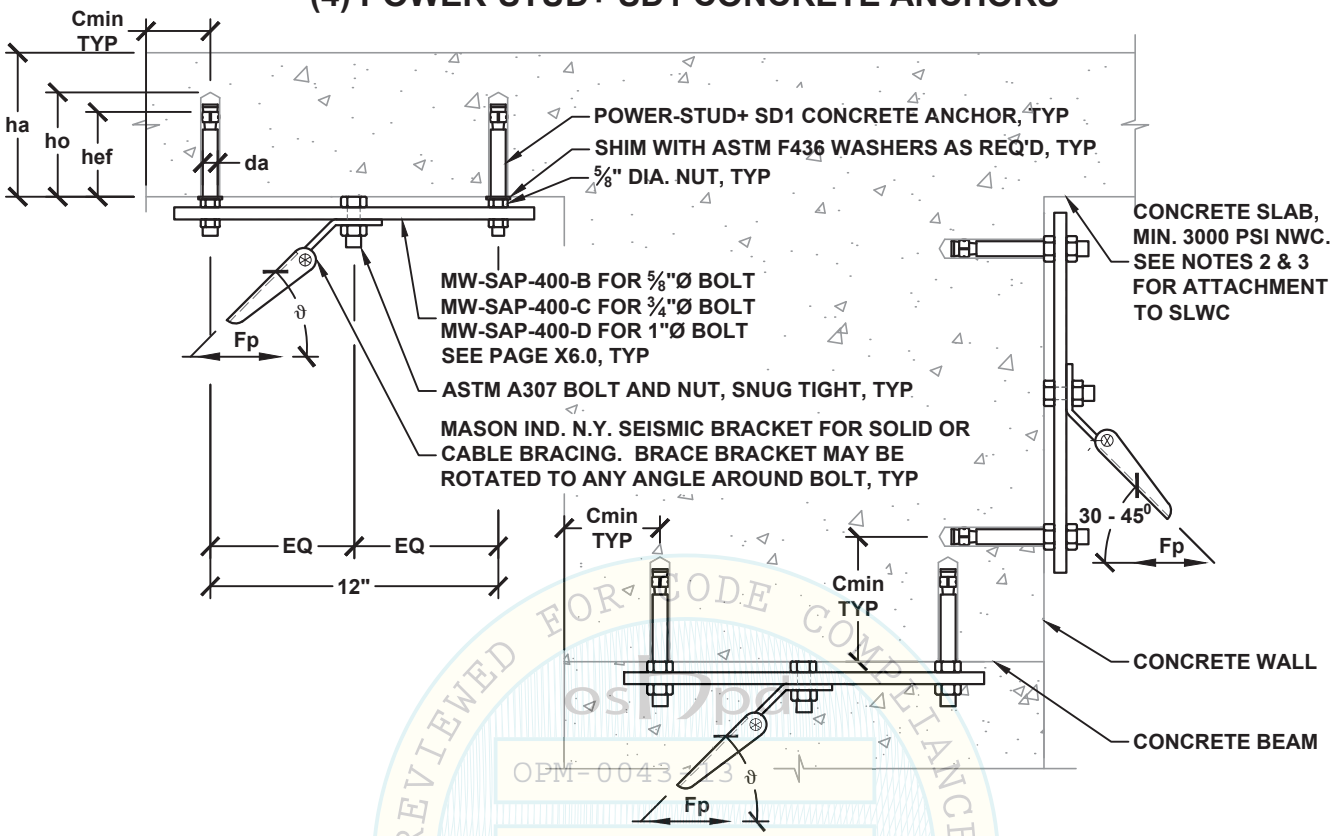

REVIEWED FOR CODE COMPLIANCE
OSHPD
OPM-0043-13
BY: Jeffrey Y. Kikumoto
DATE: 06/23/2016
CALIFORNIA BUILDING CODE

BRACE BRACKET ATTACHMENT TYPE	ALLOWABLE LATERAL LOAD Fp [2] LBS	Ω_0 = 2.5[1] BRACE BRACKET ATTACHMENT TYPE	ALLOWABLE LATERAL LOAD Fp [3] LBS	MAX BRACE RANGE ϑ	BOLT DIA. INCH	POWER-STUD+ SD1 CONCRETE ANCHOR (ICC ESR-2818) SPECIAL INSPECTION REQ'D DIA. da INCH	MIN. EFF. EMBED. hef INCH	MIN. HOLE DEPTH ho INCH	MIN. BASE TH. ha INCH	MIN. EDGE Cmin INCH	MIN. SPACING Smin INCH	TORQUE REQ'D FT-LBS
63A TO 63P	3080	63A TO 63N	2030	30°- 45°	5/8	5/8	2 3/4	3 3/4	6	6	8 1/4	80
63A TO 63N	2080	63A TO 63L	1400	46°- 60°	5/8							
75A TO 75Q	3500	75A TO 75N	2030	30°- 45°	3/4							
75A TO 75N	2020	75A TO 75L	1400	46°- 60°	3/4							
100A TO 100Q	3500	100A TO 100N	2030	30°- 45°	1							
100A TO 100N	2020	100A TO 100L	1400	46°- 60°	1							

SEE DETAIL N0.00 FOR SECTION NOTES

[1] OVERSTRENGTH FACTOR AS REQUIRED FOR ANCHORAGE TO CONCRETE.

[2] FOR BRACE BRACKET ATTACHMENTS WITHOUT OVERSTRENGTH FACTOR TO SLWC SLAB AND BEAM, THE ALLOWABLE LATERAL LOAD SHALL BE TAKEN AS 2530 LBS FOR 30°-45° MAX BRACE RANGE AND 1750 LBS FOR 46°-60° MAX BRACE RANGE.

[3] FOR BRACE BRACKET ATTACHMENTS WITH OVERSTRENGTH FACTOR TO SLWC SLAB AND BEAM, REDUCE ALLOWABLE LATERAL LOAD BY MULTIPLYING ALLOWABLE LOAD BY A FACTOR OF 0.6.

[4] EDGE DISTANCE PERPENDICULAR TO Cmin SHALL BE 1.5*Cmin, MINIMUM.

MASON WEST, INC.
1601 E. Miraloma Ave. Placentia, CA 92870
TEL (714) 630 - 0701, www.masonwest.com

Jiefu "Jeff" Zhang, SE
California SE No. S5270

PAGE
N1.33

SEISMIC BRACKET ATTACHMENT TO CONCRETE SLAB, BEAM OR WALL WITH (1) MASON IND. N.Y. SAS(E) CONCRETE ANCHOR

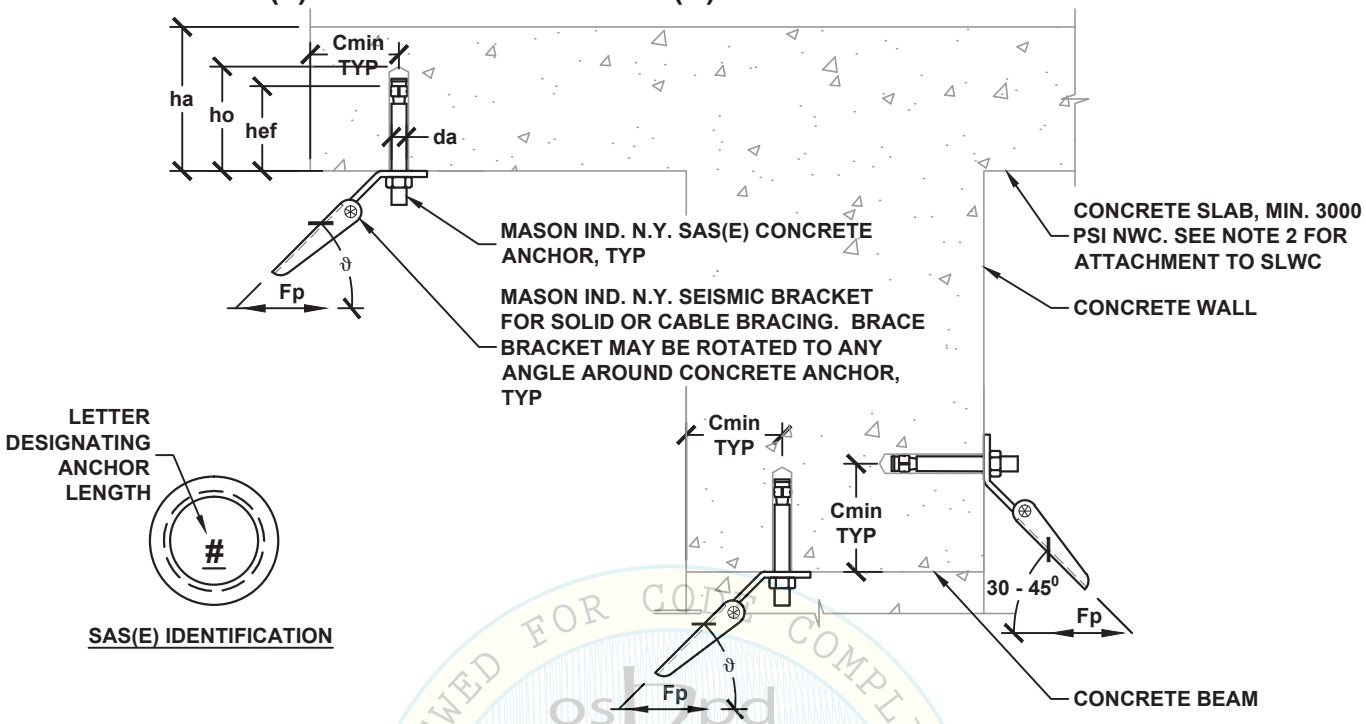

OPM-0043-13
BY: Jeffrey Y. Kikumoto
DATE: 06/23/2016

BRACE BRACKET ATTACHMENT TYPE	ALLOWABLE LATERAL LOAD Fp LBS	$\Omega_0 = 2.5^1$ BRACE BRACKET ATTACHMENT TYPE	$\Omega_0 = 2.5^1$ ALLOWABLE LATERAL LOAD Fp LBS	MAX BRACE RANGE ϑ	MASON IND. N.Y. SAS(E) CONCRETE ANCHOR (ICC ESR-3037) SPECIAL INSPECTION REQ'D DIA. da INCH	MIN. EFF. EMBED. hef INCH	MIN. HOLE DEPTH ho INCH	MIN. BASE TH. ha INCH	MIN. EDGE Cmin INCH	MIN. SPACING Smin INCH	TORQUE REQ'D FT-LBS
38A TO 38E	360	38A TO 38D	260	30°- 45°	⅜	2½	3	4½	6	7½	30
38A TO 38C	230	38A TO 38C	200	46°- 60°							
50A TO 50F	450	50A TO 50E	360	30°- 45°	½	2¼	3	4½	7	6¾	60
50A TO 50D	270	50A TO 50D	250	46°- 60°							
50A TO 50G	620	50A TO 50F	540	30°- 45°	½	3⅜	4⅛	6	7	10½	60
50A TO 50E	360	50A TO 50E	360	46°- 60°							
63A TO 63K	1100	63A TO 63J	930	30°- 45°	⅝	4½	5⅜	8	7	13½	90
63A TO 63G	650	63A TO 63G	640	46°- 60°							
75A TO 75L	1340	75A TO 75K	1110	30°- 45°	¾	5	6	9	7	15	150
75A TO 75H	790	75A TO 75H	770	46°- 60°							

SEE DETAIL N0.00 FOR SECTION NOTES

[1] OVERSTRENGTH FACTOR AS REQUIRED FOR ANCHORAGE TO CONCRETE.

[2] FOR SLWC SLAB AND BEAM, REDUCE ALLOWABLE LATERAL LOAD BY MULTIPLYING ALLOWABLE LOAD BY A FACTOR OF 0.6.

[3] EDGE DISTANCE PERPENDICULAR TO Cmin SHALL BE 1.5*Cmin, MINIMUM.

MASON WEST, INC.
1601 E. Miraloma Ave. Placentia, CA 92870
TEL (714) 630 - 0701, www.masonwest.com

Jiefu "Jeff" Zhang, SE
California SE No. S5270

PAGE
N1.40

SEISMIC BRACKET ATTACHMENT TO CONCRETE SLAB, BEAM OR WALL WITH (2) MASON IND. N.Y. SAS(E) CONCRETE ANCHORS

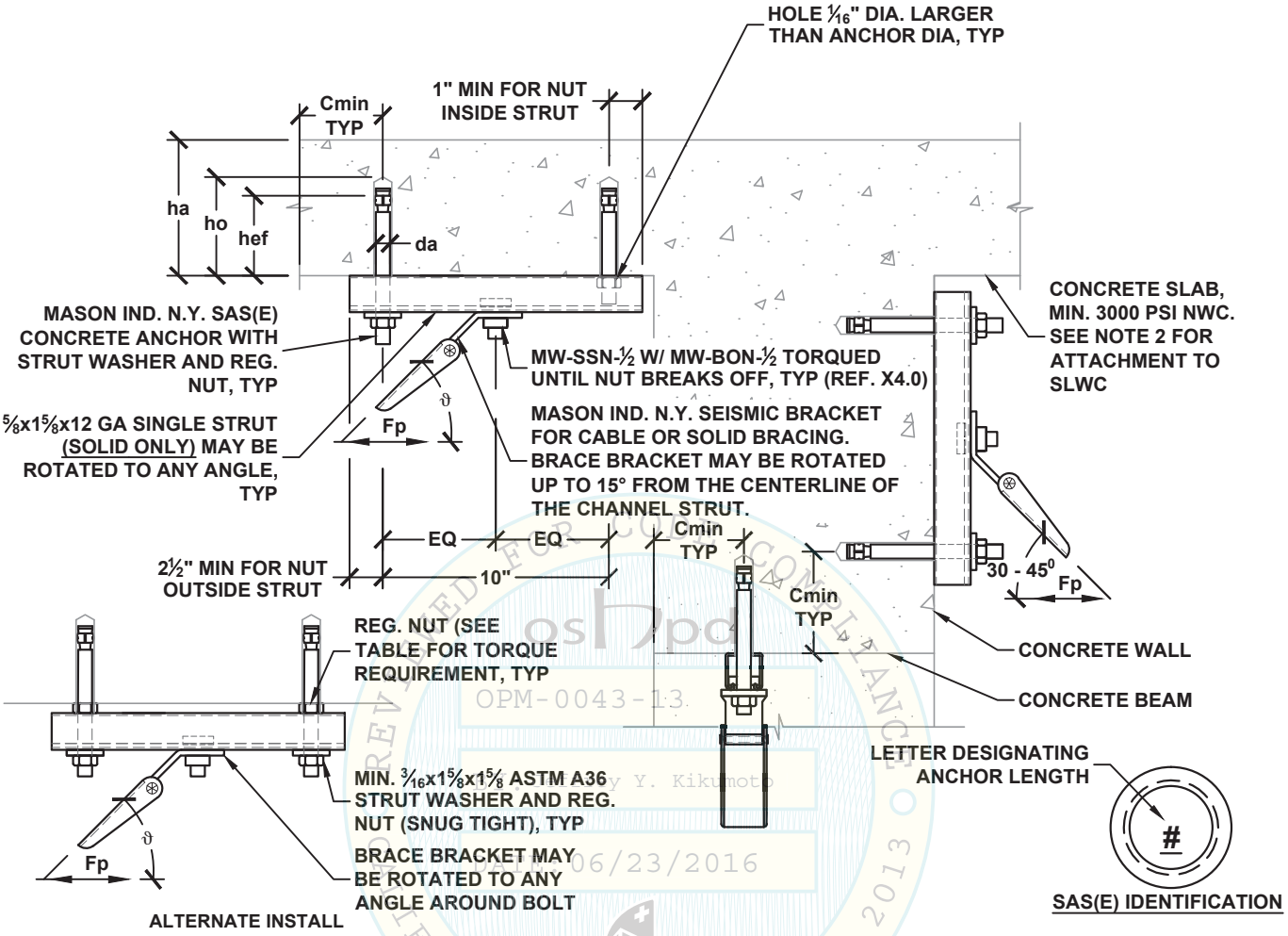

BRACE BRACKET ATTACHMENT TYPE	ALLOWABLE LATERAL LOAD Fp LBS	$\Omega_0 = 2.5$[1] BRACE BRACKET ATTACHMENT TYPE	$\Omega_0 = 2.5$[1] ALLOWABLE LATERAL LOAD Fp [2] LBS	MAX BRACE RANGE ϑ	MASON IND. N.Y. SAS(E) CONCRETE ANCHORS (ICC ESR-3037) SPECIAL INSPECTION REQ'D DIA. da INCH	MIN. EFF. EMBED. hef INCH	MIN. HOLE DEPTH ho INCH	MIN. BASE TH. ha INCH	MIN. EDGE Cmin INCH	MIN. SPACING Smin INCH	TORQUE REQ'D FT-LBS
50A TO 50G	620	50A TO 50E	430	30°- 45°	⅜	2½	3	4½	6	7½	30
50A TO 50F	530	50A TO 50D	340	46°- 60°							
50A TO 50G	620	50A TO 50F	560	30°- 45°	½	2¼	3	4½	7	6¾	60
50A TO 50F	530	50A TO 50E	420	46°- 60°							

SEE DETAIL N0.00 FOR SECTION NOTES

[1] OVERSTRENGTH FACTOR AS REQUIRED FOR ANCHORAGE TO CONCRETE.

[2] FOR BRACE BRACKET ATTACHMENTS WITH OVERSTRENGTH FACTOR TO SLWC SLAB AND BEAM, REDUCE ALLOWABLE LATERAL LOAD BY MULTIPLYING ALLOWABLE LOAD BY A FACTOR OF 0.6.

[3] EDGE DISTANCE PERPENDICULAR TO Cmin SHALL BE 1.5*Cmin, MINIMUM.

MASON WEST, INC.
1601 E. Miraloma Ave. Placentia, CA 92870
TEL (714) 630 - 0701, www.masonwest.com

Jiefu "Jeff" Zhang, SE
California SE No. S5270

PAGE
N1.41

OPM-0043-13 Reviewed for Code Compliance by Jeffrey Kikumoto 06/23/2016

SEISMIC BRACKET ATTACHMENT TO CONCRETE SLAB, BEAM OR WALL WITH (2) MASON IND. N.Y. SAS(E) CONCRETE ANCHORS

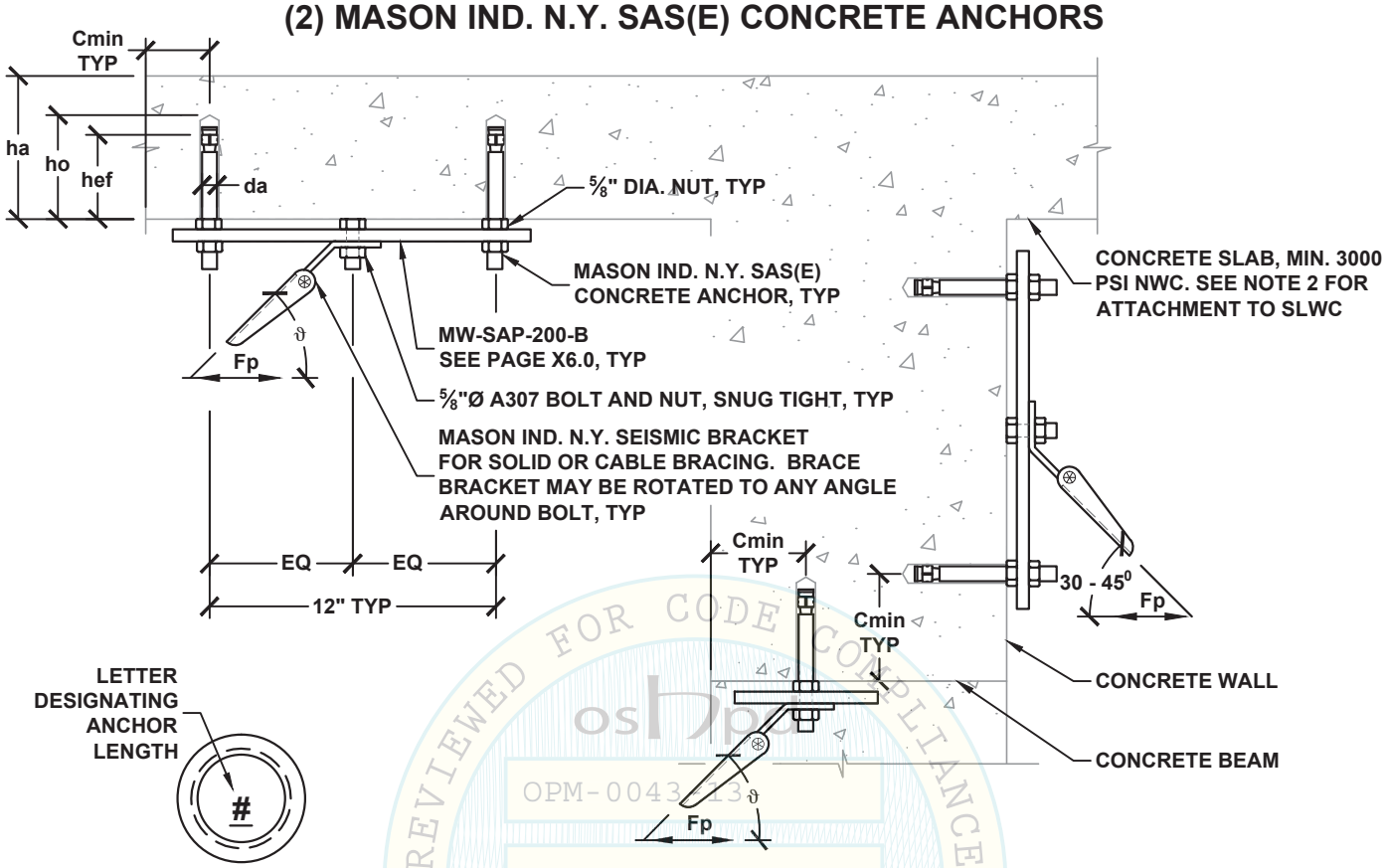

SAS(E) IDENTIFICATION

REVIEWED FOR CODE COMPLIANCE
CALIFORNIA BUILDING CODE, 2013
OPM-0043-13
BY: Jeffrey Y. Kikumoto
DATE: 06/23/2016

BRACE BRACKET ATTACHMENT TYPE	ALLOWABLE LATERAL LOAD Fp LBS	$\Omega_0 = 2.5$[1] BRACE BRACKET ATTACHMENT TYPE	$\Omega_0 = 2.5$[1] ALLOWABLE LATERAL LOAD Fp [2] LBS	MAX BRACE RANGE ϑ	MASON IND. N.Y. SAS(E) CONCRETE ANCHOR (ICC ESR-3037) SPECIAL INSPECTION REQ'D DIA. da INCH	MIN. EFF. EMBED. hef INCH	MIN. HOLE DEPTH ho INCH	MIN. BASE TH. ha INCH	MIN. EDGE Cmin INCH	MIN. SPACING Smin INCH	TORQUE REQ'D FT-LBS
63A TO 63M	1930	63A TO 63M	1850	30°- 45°	⅝	4½	5⅜	8	7	13½	90
63A TO 63K	1110	63A TO 63K	1110	46°- 60°							

SEE DETAIL N0.00 FOR SECTION NOTES

[1] OVERSTRENGTH FACTOR AS REQUIRED FOR ANCHORAGE TO CONCRETE.

[2] FOR BRACE BRACKET ATTACHMENTS WITH OVERSTRENGTH FACTOR TO SLWC SLAB AND BEAM, REDUCE ALLOWABLE LATERAL LOAD BY MULTIPLYING ALLOWABLE LOAD BY A FACTOR OF 0.6.

[3] EDGE DISTANCE PERPENDICULAR TO Cmin SHALL BE 1.5*Cmin, MINIMUM.

MASON WEST, INC.
1601 E. Miraloma Ave. Placentia, CA 92870
TEL (714) 630 - 0701, www.masonwest.com

Jiefu "Jeff" Zhang, SE
California SE No. S5270

PAGE
N1.42

SEISMIC BRACKET ATTACHMENT TO CONCRETE SLAB, BEAM OR WALL WITH (4) MASON IND. N.Y. SAS(E) CONCRETE ANCHORS

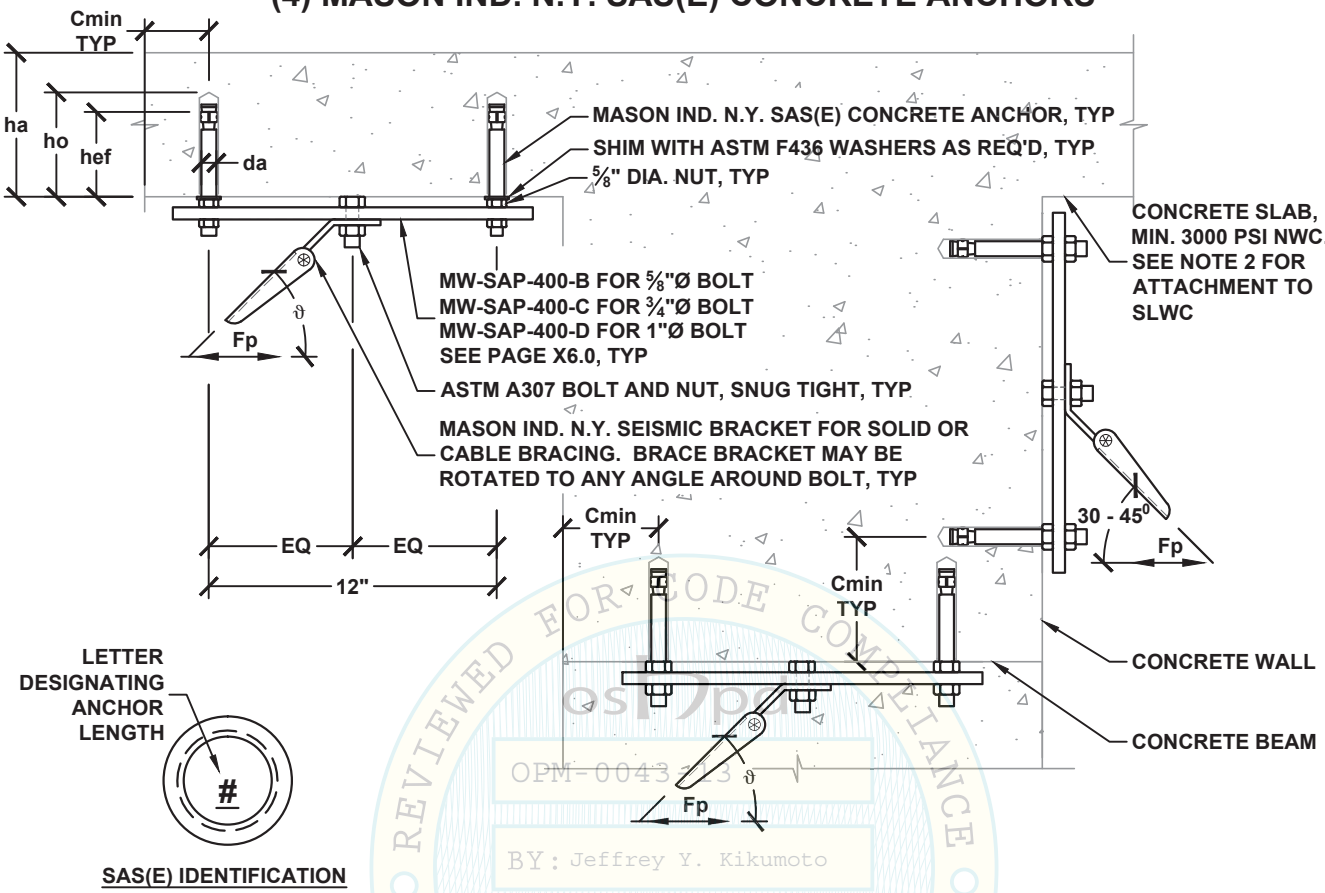

REVIEWED FOR CODE COMPLIANCE
OPM-0043-13
BY: Jeffrey Y. Kikumoto
DATE: 06/23/2016
CALIFORNIA BUILDING CODE, 2013

BRACE BRACKET ATTACHMENT TYPE	ALLOWABLE LATERAL LOAD Fp LBS	$\Omega_0 = 2.5$[1] BRACE BRACKET ATTACHMENT TYPE	ALLOWABLE LATERAL LOAD Fp [2] LBS	MAX BRACE RANGE ϑ	BOLT DIA. INCH	MASON IND. N.Y. SAS(E) CONCRETE ANCHOR (ICC ESR-3037) SPECIAL INSPECTION REQ'D DIA. da INCH	MIN. EFF. EMBED. hef INCH	MIN. HOLE DEPTH ho INCH	MIN. BASE TH. ha INCH	MIN. EDGE Cmin INCH	MIN. SPACING Smin INCH	TORQUE REQ'D FT-LBS
63A TO 63P	3080	63A TO 63P	3080	30°- 45°	5/8	5/8	4½	5⅜	8	7	13½	90
63A TO 63N	2080	63A TO 63N	2080	46°- 60°	5/8							
75A TO 75Q	3500	75A TO 75Q	3500	30°- 45°	3/4							
75A TO 75N	2020	75A TO 75N	2020	46°- 60°	3/4							
100A TO 100Q	3500	100A TO 100Q	3500	30°- 45°	1							
100A TO 100N	2020	100A TO 100N	2020	46°- 60°	1							

SEE DETAIL N0.00 FOR SECTION NOTES

[1] OVERSTRENGTH FACTOR AS REQUIRED FOR ANCHORAGE TO CONCRETE.

[2] FOR BRACE BRACKET ATTACHMENTS WITH OVERSTRENGTH FACTOR TO SLWC SLAB AND BEAM, THE ALLOWABLE LATERAL LOAD SHALL BE TAKEN AS 2220 LBS FOR 30°-45° MAX BRACE RANGE AND 1520 LBS FOR 46°-60° MAX BRACE RANGE.

[3] EDGE DISTANCE PERPENDICULAR TO Cmin SHALL BE 1.5*Cmin, MINIMUM.

MASON WEST, INC.
1601 E. Miraloma Ave. Placentia, CA 92870
TEL (714) 630 - 0701, www.masonwest.com

Jiefu "Jeff" Zhang, SE
California SE No. S5270

PAGE
N1.43

SEISMIC BRACKET ATTACHMENT TO CONCRETE SLAB, BEAM OR WALL WITH (1) POWER-STUD+ SD2 CONCRETE ANCHOR

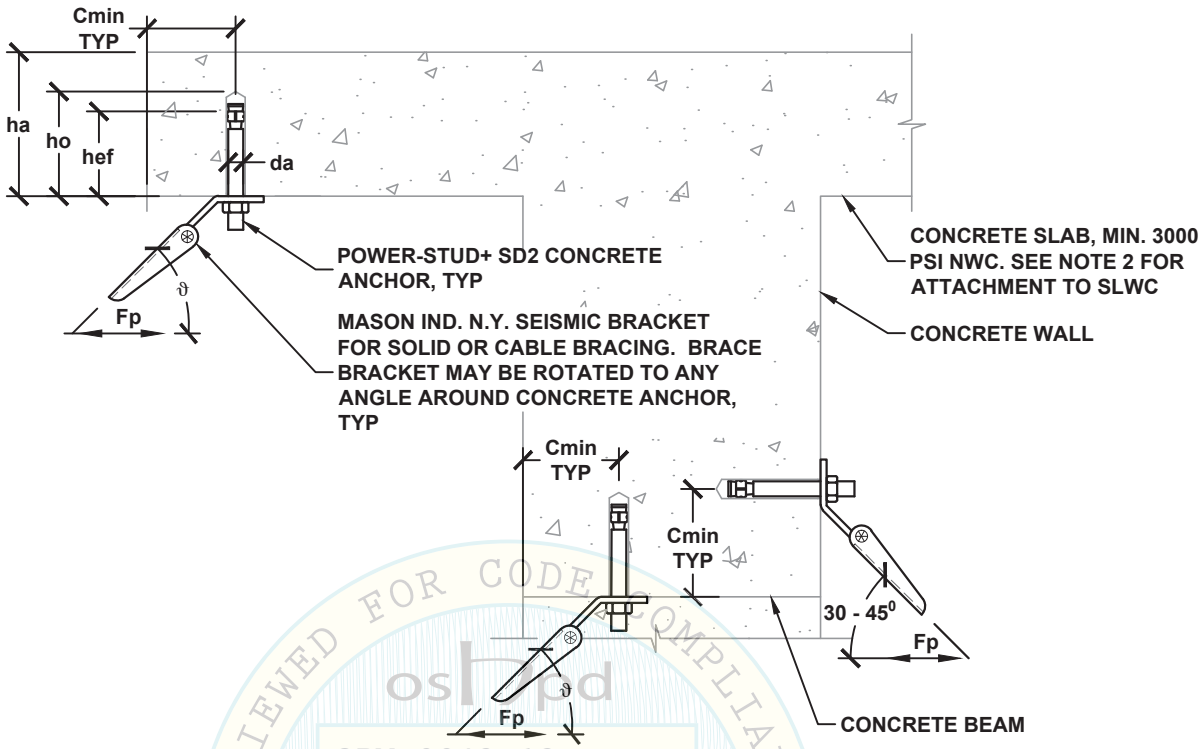

BRACE BRACKET ATTACHMENT TYPE	ALLOWABLE LATERAL LOAD Fp [2] LBS	$\Omega_0 = 2.5$[1] BRACE BRACKET ATTACHMENT TYPE	$\Omega_0 = 2.5$[1] ALLOWABLE LATERAL LOAD Fp [2] LBS	MAX BRACE RANGE ϑ	POWER-STUD+ SD2 CONCRETE ANCHOR (ICC ESR-2502) SPECIAL INSPECTION REQ'D DIA. da INCH	MIN. EFF. EMBED. hef INCH	MIN. HOLE DEPTH ho INCH	MIN. BASE TH. ha INCH	MIN. EDGE Cmin INCH	MIN. SPACING Smin INCH	TORQUE REQ'D FT-LBS
38A TO 38D	330	38A TO 38D	270	30°- 45°	⅜	2	2⅝	4	4½	6	20
38A TO 38C	200	38A TO 38C	190	46°- 60°							
50A TO 50E	370	50A TO 50D	310	30°- 45°	½	2	2¾	4½	4½	6	40
50A TO 50C	220	50A TO 50C	210	46°- 60°							
50A TO 50G	670	50A TO 50F	540	30°- 45°	½	3¼	4	6	6	9¾	40
50A TO 50E	400	50A TO 50E	380	46°- 60°							
63A TO 63H	790	63A TO 63G	660	30°- 45°	⅝	3¼	4¼	6	6	9¾	60
63A TO 63F	470	63A TO 63F	450	46°- 60°							
63A TO 63K	1080	63A TO 63H	840	30°- 45°	⅝	4¼	5¼	6½	12	12¾	60
63A TO 63G	660	63A TO 63G	610	46°- 60°							
75A TO 75J	980	75A TO 75H	820	30°- 45°	¾	3¾	5	7	12	11¼	110
75A TO 75G	580	75A TO 75F	560	46°- 60°							

SEE DETAIL N0.00 FOR SECTION NOTES

[1] OVERSTRENGTH FACTOR AS REQUIRED FOR ANCHORAGE TO CONCRETE.

[2] FOR SLWC SLAB AND BEAM, REDUCE ALLOWABLE LATERAL LOAD BY MULTIPLYING ALLOWABLE LOAD BY A FACTOR OF 0.68.

[3] EDGE DISTANCE PERPENDICULAR TO Cmin SHALL BE 1.5*Cmin, MINIMUM.

OPM-0043-13
BY: Jeffrey Y. Kikumoto
DATE: 06/23/2016
REVIEWED FOR CODE COMPLIANCE
OSHPD
CALIFORNIA BUILDING CODE

MASON WEST, INC.
1601 E. Miraloma Ave. Placentia, CA 92870
TEL (714) 630 - 0701, www.masonwest.com

Jiefu "Jeff" Zhang, SE
California SE No. S5270

PAGE
N1.60

SEISMIC BRACKET ATTACHMENT TO CONCRETE SLAB, BEAM OR WALL WITH (2) POWER-STUD+ SD2 CONCRETE ANCHORS

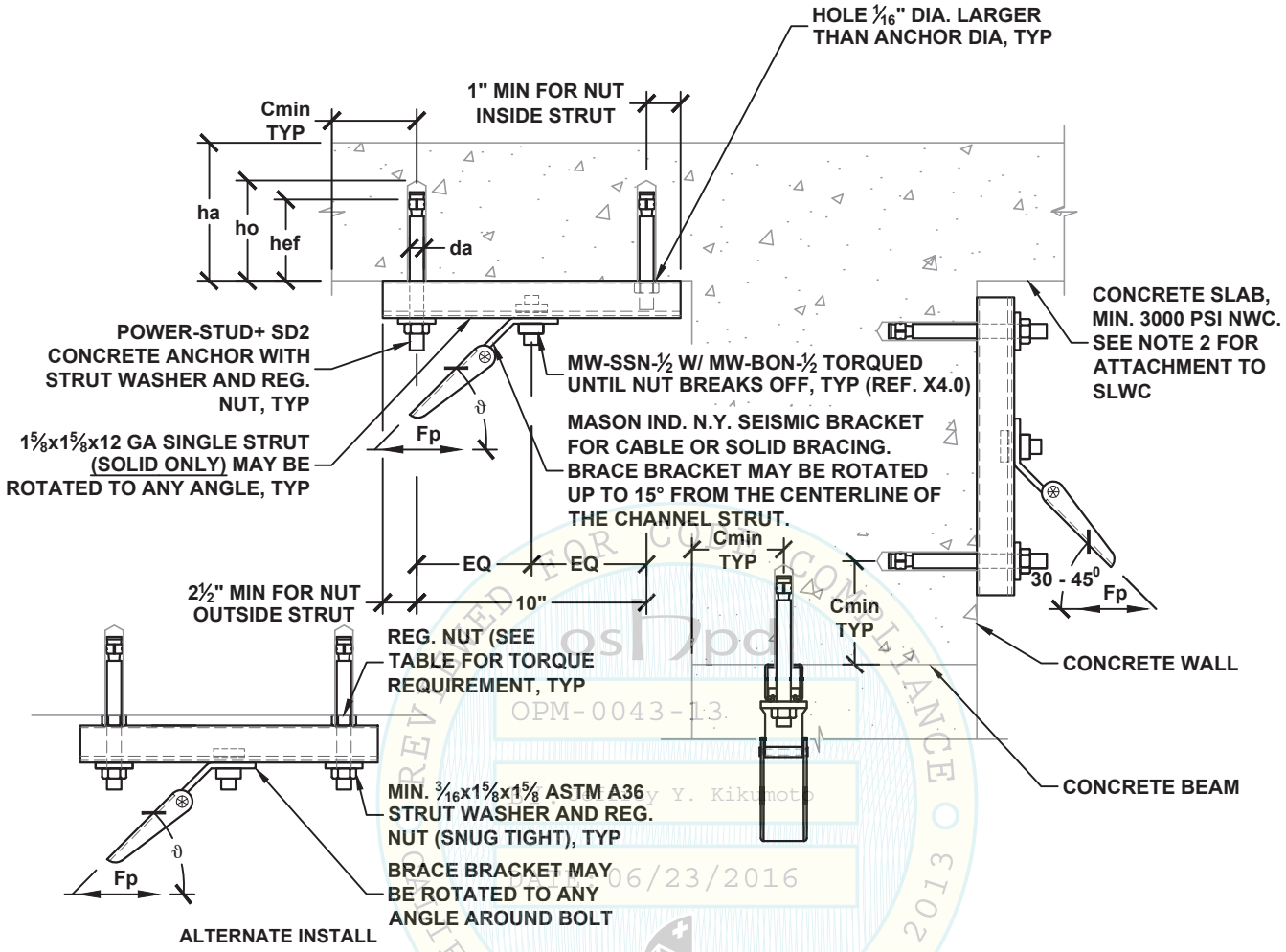

OSHPD PREAPPROVED FOR CODE COMPLIANCE OPM-0043-13 Reviewed by Y. Kikumoto DSA 06/23/2016 CALIFORNIA BUILDING CODE, 2013

BRACE BRACKET ATTACHMENT TYPE	ALLOWABLE LATERAL LOAD Fp [2] LBS	Ω_0 = 2.5[1] BRACE BRACKET ATTACHMENT TYPE	Ω_0 = 2.5[1] ALLOWABLE LATERAL LOAD Fp [2] LBS	MAX BRACE RANGE ϑ	POWER-STUD+ SD2 CONCRETE ANCHOR (ICC ESR-2502) SPECIAL INSPECTION REQ'D DIA. da INCH	MIN. EFF. EMBED. hef INCH	MIN. HOLE DEPTH ho INCH	MIN. BASE TH. ha INCH	MIN. EDGE Cmin INCH	MIN. SPACING Smin INCH	TORQUE REQ'D FT-LBS
50A TO 50G	620	50A TO 50E	420	30°- 45°	3/8	2	2 5/8	4	4 1/2	6	20
50A TO 50F	530	50A TO 50D	310	46°- 60°							
50A TO 50G	620	50A TO 50F	470	30°- 45°	1/2	2	2 3/4	4 1/2	4 1/2	6	40
50A TO 50F	530	50A TO 50E	350	46°- 60°							

SEE DETAIL N0.00 FOR SECTION NOTES

[1] OVERSTRENGTH FACTOR AS REQUIRED FOR ANCHORAGE TO CONCRETE.

[2] FOR SLWC SLAB AND BEAM, REDUCE ALLOWABLE LATERAL LOAD BY MULTIPLYING ALLOWABLE LOAD BY A FACTOR OF 0.68.

[3] EDGE DISTANCE PERPENDICULAR TO Cmin SHALL BE 1.5*Cmin, MINIMUM.

MASON WEST, INC.
1601 E. Miraloma Ave. Placentia, CA 92870
TEL (714) 630 - 0701, www.masonwest.com

Jiefu "Jeff" Zhang, SE
California SE No. S5270

PAGE
N1.61

SEISMIC BRACKET ATTACHMENT TO CONCRETE SLAB, BEAM OR WALL WITH (2) POWER-STUD+ SD2 CONCRETE ANCHORS

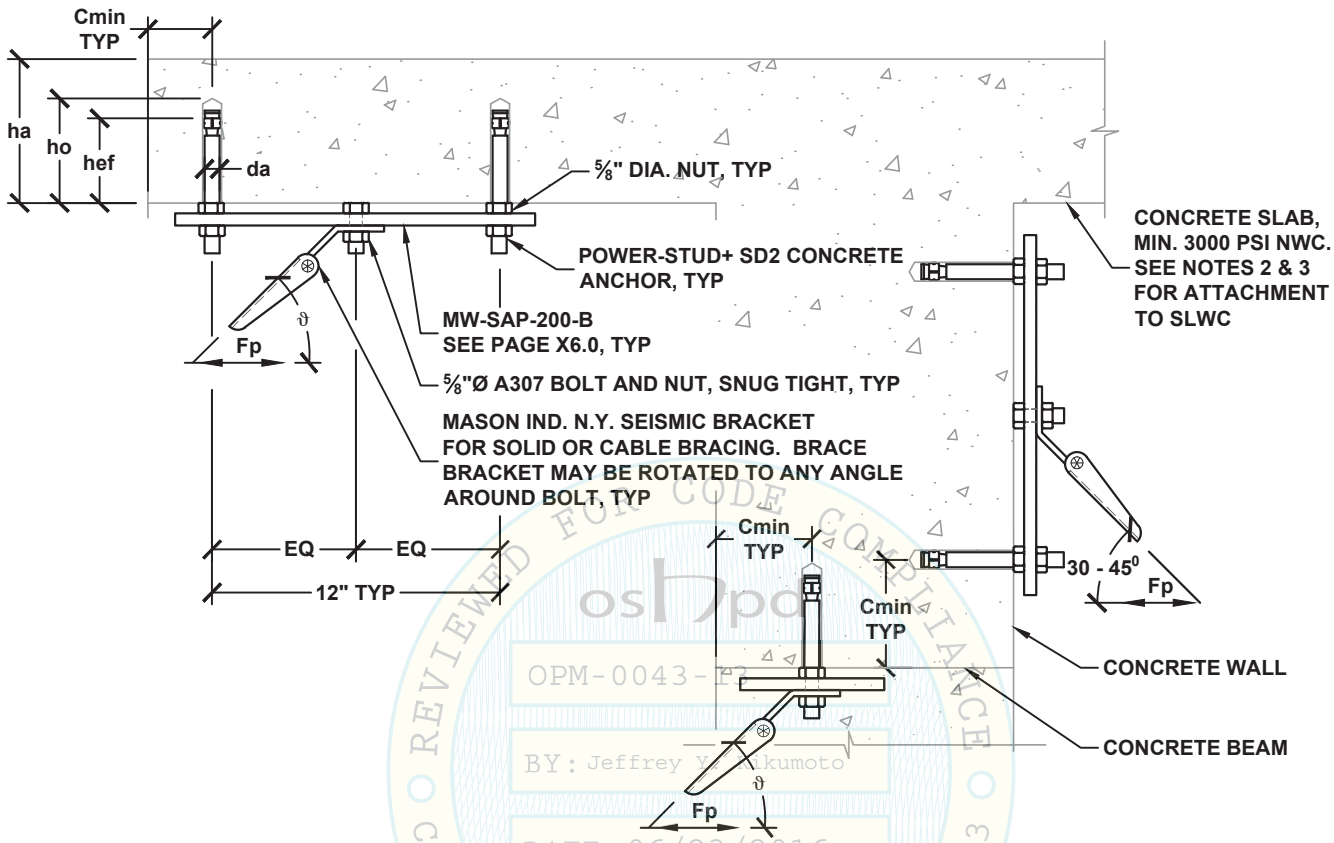

REVIEWED FOR CODE COMPLIANCE
CALIFORNIA BUILDING CODE, 2013
OPM-0043-13
BY: Jeffrey Kikumoto
DATE: 06/23/2016

BRACE BRACKET ATTACHMENT TYPE	ALLOWABLE LATERAL LOAD Fp [2] LBS	Ω_0 = 2.5[1] BRACE BRACKET ATTACHMENT TYPE	Ω_0 = 2.5[1] ALLOWABLE LATERAL LOAD Fp [3] LBS	MAX BRACE RANGE ϑ	POWER-STUD+ SD2 CONCRETE ANCHOR (ICC ESR-2502) SPECIAL INSPECTION REQ'D DIA. da INCH	MIN. EFF. EMBED. hef INCH	MIN. HOLE DEPTH ho INCH	MIN. BASE TH. ha INCH	MIN. EDGE Cmin INCH	MIN. SPACING Smin INCH	TORQUE REQ'D FT-LBS
63A TO 63M	1930	63A TO 63L	1320	30°- 45°	⅝	3¼	4¼	6	6	9¾	60
63A TO 63K	1110	63A TO 63J	910	46°- 60°							

SEE DETAIL N0.00 FOR SECTION NOTES

[1] OVERSTRENGTH FACTOR AS REQUIRED FOR ANCHORAGE TO CONCRETE.

[2] FOR BRACE BRACKET ATTACHMENTS WITHOUT OVERSTRENGTH FACTOR TO SLWC SLAB AND BEAM, THE ALLOWABLE LATERAL LOAD SHALL BE TAKEN AS 1870 LBS FOR 30°-45° MAX BRACE RANGE.

[3] FOR BRACE BRACKET ATTACHMENTS WITH OVERSTRENGTH FACTOR TO SLWC SLAB AND BEAM, REDUCE ALLOWABLE LATERAL LOAD BY MULTIPLYING ALLOWABLE LOAD BY A FACTOR OF 0.68.

[4] EDGE DISTANCE PERPENDICULAR TO Cmin SHALL BE 1.5*Cmin, MINIMUM.

MASON WEST, INC.
1601 E. Miraloma Ave. Placentia, CA 92870
TEL (714) 630 - 0701, www.masonwest.com

Jiefu "Jeff" Zhang, SE
California SE No. S5270

PAGE
N1.62

SEISMIC BRACKET ATTACHMENT TO CONCRETE SLAB, BEAM OR WALL WITH (4) POWER-STUD+ SD2 CONCRETE ANCHORS

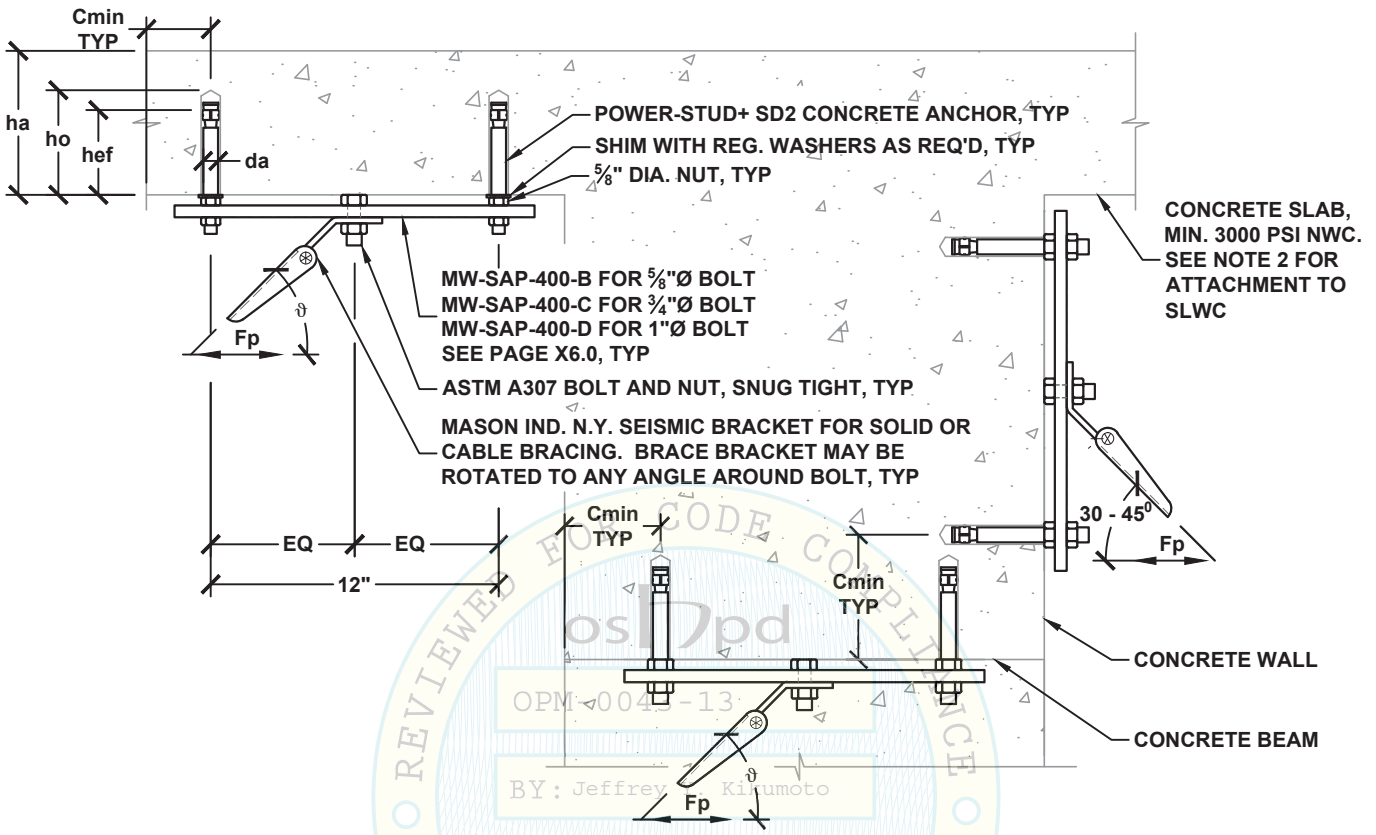

REVIEWED FOR CODE COMPLIANCE
OSHPD
OPM-0043-13
BY: Jeffrey Kikumoto
DATE: 06/23/2016
CALIFORNIA BUILDING CODE, 2013

BRACE BRACKET ATTACHMENT TYPE	ALLOWABLE LATERAL LOAD Fp [2] LBS	$\Omega_0 = 2.5$[1] BRACE BRACKET ATTACHMENT TYPE	$\Omega_0 = 2.5$[1] ALLOWABLE LATERAL LOAD Fp [2] LBS	MAX BRACE RANGE ϑ	BOLT DIA. INCH	POWER-STUD+ SD2 CONCRETE ANCHOR (ICC ESR-2502) SPECIAL INSPECTION REQ'D DIA. da INCH	MIN. EFF. EMBED. hef INCH	MIN. HOLE DEPTH ho INCH	MIN. BASE TH. ha INCH	MIN. EDGE Cmin INCH	MIN. SPACING Smin INCH	TORQUE REQ'D FT-LBS
63A TO 63P	3080	63A TO 63P	2640	30°- 45°	5/8	5/8	3 1/4	4 1/4	6	6	9 3/4	60
63A TO 63N	2080	63A TO 63M	1820	46°- 60°	5/8							
75A TO 75Q	3500	75A TO 75P	2640	30°- 45°	3/4							
75A TO 75N	2020	75A TO 75M	1820	46°- 60°	3/4							
100A TO 100Q	3500	100A TO 100P	2640	30°- 45°	1							
100A TO 100N	2020	100A TO 100M	1820	46°- 60°	1							

SEE DETAIL N0.00 FOR SECTION NOTES

[1] OVERSTRENGTH FACTOR AS REQUIRED FOR ANCHORAGE TO CONCRETE.

[2] FOR BRACE BRACKET ATTACHMENTS WITH OVERSTRENGTH FACTOR TO SLWC SLAB AND BEAM, REDUCE ALLOWABLE LATERAL LOAD BY MULTIPLYING ALLOWABLE LOAD BY A FACTOR OF 0.68.

[3] EDGE DISTANCE PERPENDICULAR TO Cmin SHALL BE 1.5*Cmin, MINIMUM.

MASON WEST, INC.
1601 E. Miraloma Ave. Placentia, CA 92870
TEL (714) 630 - 0701, www.masonwest.com

Jiefu "Jeff" Zhang, SE
California SE No. S5270

PAGE
N1.63

SEISMIC BRACKET ATTACHMENT TO CONCRETE FILLED METAL DECK WITH (1) MW-PAL-A-MD CONCRETE INSERT

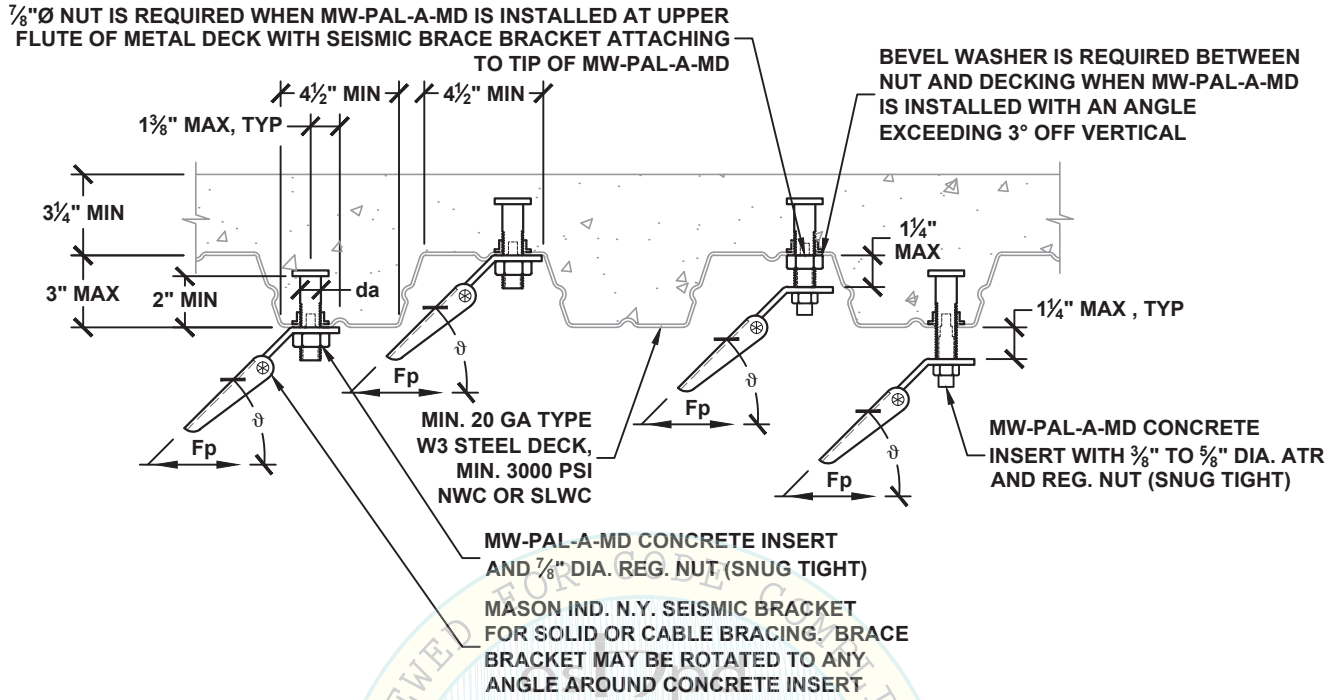

OPM-0043-13
BY: Jeffrey Y. Kikumoto
DATE: 06/23/2016

BRACE BRACKET ATTACHMENT TYPE	ALLOWABLE LATERAL LOAD Fp LBS	$\Omega_0 = 2.5$ [1] BRACE BRACKET ATTACHMENT TYPE	$\Omega_0 = 2.5$ [1] ALLOWABLE LATERAL LOAD Fp LBS	MAX BRACE RANGE ϑ	ATR DIA. INCH	MW-PAL-A-MD CONCRETE INSERT (REFER TO PAGES X5.0.MD & X5.2) DIA. da INCH	MIN. SPACING Smin INCH	MIN. END DIST. Cmin INCH
38A TO 38G	580	38A TO 38D	280	30°- 45°	⅜	⅞	6¾	5¼
38A TO 38E	390	38A TO 38C	190	46°- 60°				
50A TO 50F	480	50A TO 50C	230	30°- 45°	½	⅞	6¾	5¼
50A TO 50E	330	50A TO 50B	170	46°- 60°				
63A TO 63F	530	63A TO 63D	250	30°- 45°	⅝	⅞	6¾	5¼
63A TO 63E	350	63A TO 63B	170	46°- 60°				
88A TO 88G	670	88A TO 88D	320	30°- 45°	N/A	⅞	6¾	5¼
88A TO 88E	440	88A TO 88C	210	46°- 60°				

SEE DETAIL N0.00 FOR SECTION NOTES

[1] OVERSTRENGTH FACTOR AS REQUIRED FOR ANCHORAGE TO CONCRETE.

MASON WEST, INC.
1601 E. Miraloma Ave. Placentia, CA 92870
TEL (714) 630 - 0701, www.masonwest.com

Jiefu "Jeff" Zhang, SE
California SE No. S5270

PAGE
N2.10

SEISMIC BRACKET ATTACHMENT TO CONCRETE FILLED METAL DECK WITH (1) MW-PAL-A-MD CONCRETE INSERT INTO UPPER FLUTE ONLY

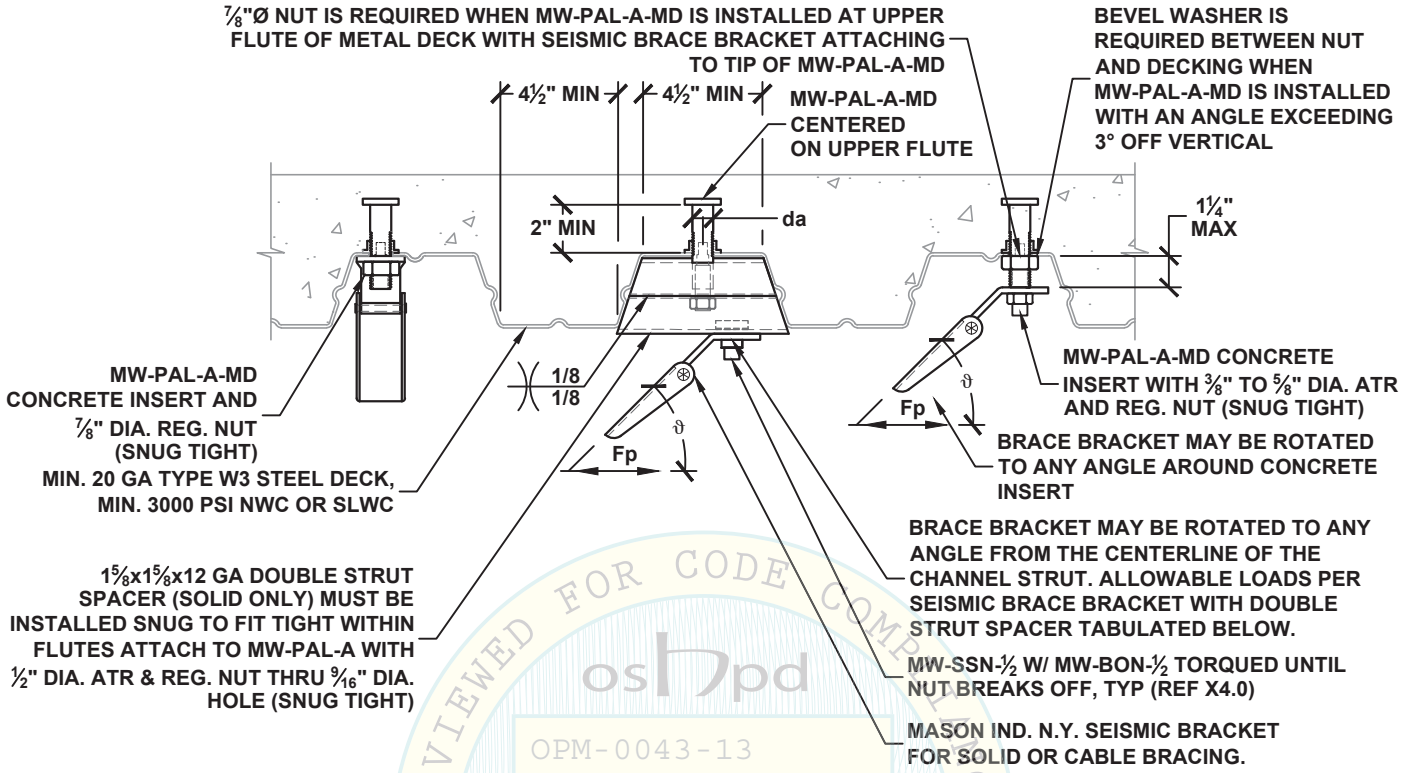

BRACE BRACKET ATTACHMENT TYPE	ALLOWABLE LATERAL LOAD Fp LBS	$\Omega_0 = 2.5$ [1] BRACE BRACKET ATTACHMENT TYPE	ALLOWABLE LATERAL LOAD Fp LBS	MAX BRACE RANGE ϑ	ATR DIA. INCH	MW-PAL-A-MD CONCRETE INSERT (REFER TO PAGES X5.0.MD & X5.1) DIA. da INCH	MIN. SPACING Smin INCH	MIN. END DIST. Cmin INCH
SEISMIC BRACE BRACKET WITHOUT DOUBLE STRUT SPACER								
38A TO 38K	1210	38A TO 38G	580	30°- 45°	⅜	⅞	6¾	5¼
38A TO 38H	830	38A TO 38E	400	46°- 60°				
50A TO 50L	1480	50A TO 50H	710	30°- 45°	½	⅞	6¾	5¼
50A TO 50K	1030	50A TO 50F	490	46°- 60°				
63A TO 63M	1910	63A TO 63J	920	30°- 45°	⅝	⅞	6¾	5¼
63A TO 63K	1180	63A TO 63F	570	46°- 60°				
88A TO 88N	2400	88A TO 88K	1150	30°- 45°	N/A	⅞	6¾	5¼
88A TO 88K	1170	88A TO 88F	560	46°- 60°				
SEISMIC BRACE BRACKET WITH DOUBLE STRUT SPACER								
50A TO 50G	620	50A TO 50G	620	30°- 45°	½	⅞	6¾	5¼
50A TO 50F	530	50A TO 50F	490	46°- 60°				

SEE DETAIL N0.00 FOR SECTION NOTES

[1] OVERSTRENGTH FACTOR AS REQUIRED FOR ANCHORAGE TO CONCRETE.

OSHPD OPM-0043-13 BY: Jeffrey Y. Kikumoto DATE: 6/23/2016 REVIEWED FOR CODE COMPLIANCE CALIFORNIA BUILDING CODE, 2013

MASON WEST, INC.
1601 E. Miraloma Ave. Placentia, CA 92870
TEL (714) 630 - 0701, www.masonwest.com

Jiefu "Jeff" Zhang, SE
California SE No. S5270

PAGE
N2.11

SEISMIC BRACKET ATTACHMENT TO CONCRETE FILLED METAL DECK WITH (2) MW-PAL-A-MD CONCRETE INSERTS

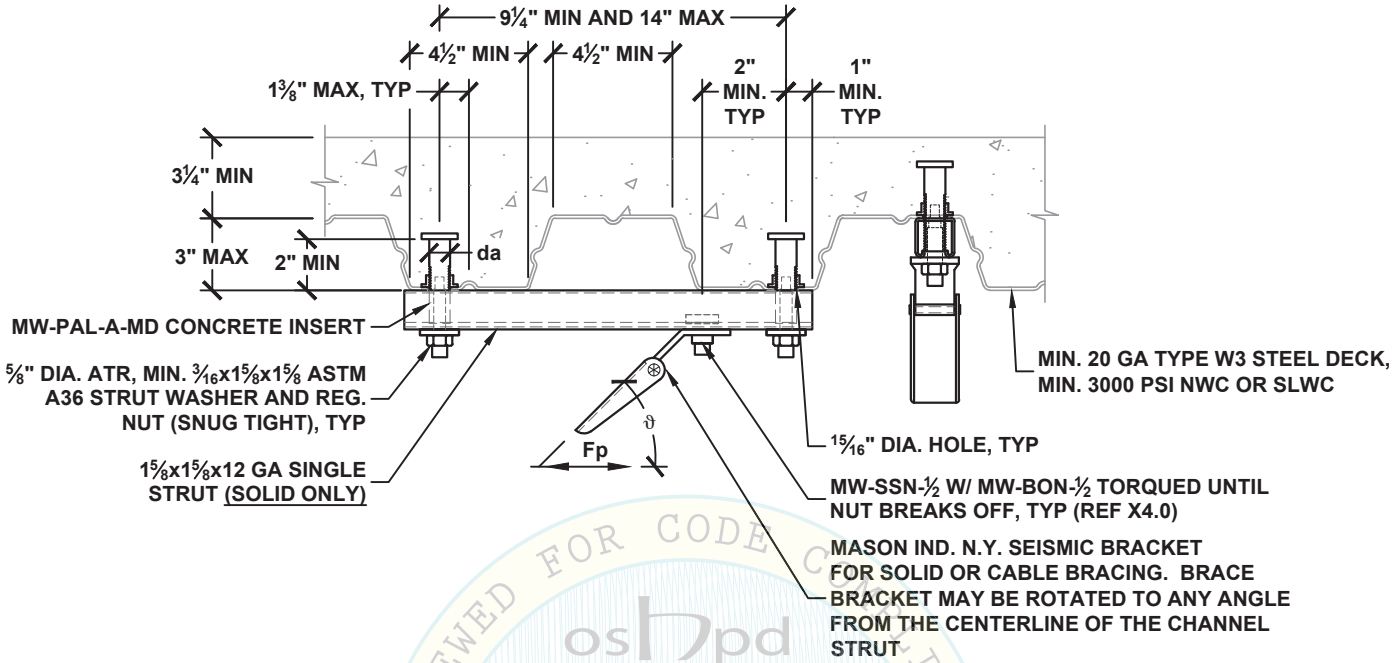

REVIEWED FOR CODE COMPLIANCE
CALIFORNIA BUILDING CODE 2013
oshpd
OPM-0043-13
BY: Jeffrey Y. Kikumoto
DATE: 06/23/2016

BRACE BRACKET ATTACHMENT TYPE	ALLOWABLE LATERAL LOAD Fp LBS	$\Omega_0 = 2.5$ [1] BRACE BRACKET ATTACHMENT TYPE	$\Omega_0 = 2.5$ [1] ALLOWABLE LATERAL LOAD Fp LBS	MAX BRACE RANGE ϑ	MW-PAL-A-MD CONCRETE INSERT (REFER TO PAGES X5.0.MD & X5.1) DIA. da INCH	MIN. SPACING Smin INCH	MIN. END DIST. Cmin INCH
50A TO 50G	620	50A TO 50E	370	30°- 45°	⅞	6¾	5¼
50A TO 50F	510	50A TO 50D	250	46°- 60°			

SEE DETAIL N0.00 FOR SECTION NOTES

[1] OVERSTRENGTH FACTOR AS REQUIRED FOR ANCHORAGE TO CONCRETE.

MASON WEST, INC.
1601 E. Miraloma Ave. Placentia, CA 92870
TEL (714) 630 - 0701, www.masonwest.com

Jiefu "Jeff" Zhang, SE
California SE No. S5270

PAGE
N2.12

SEISMIC BRACKET ATTACHMENT TO CONCRETE FILLED METAL DECK WITH (2) MW-PAL-A-MD CONCRETE INSERTS

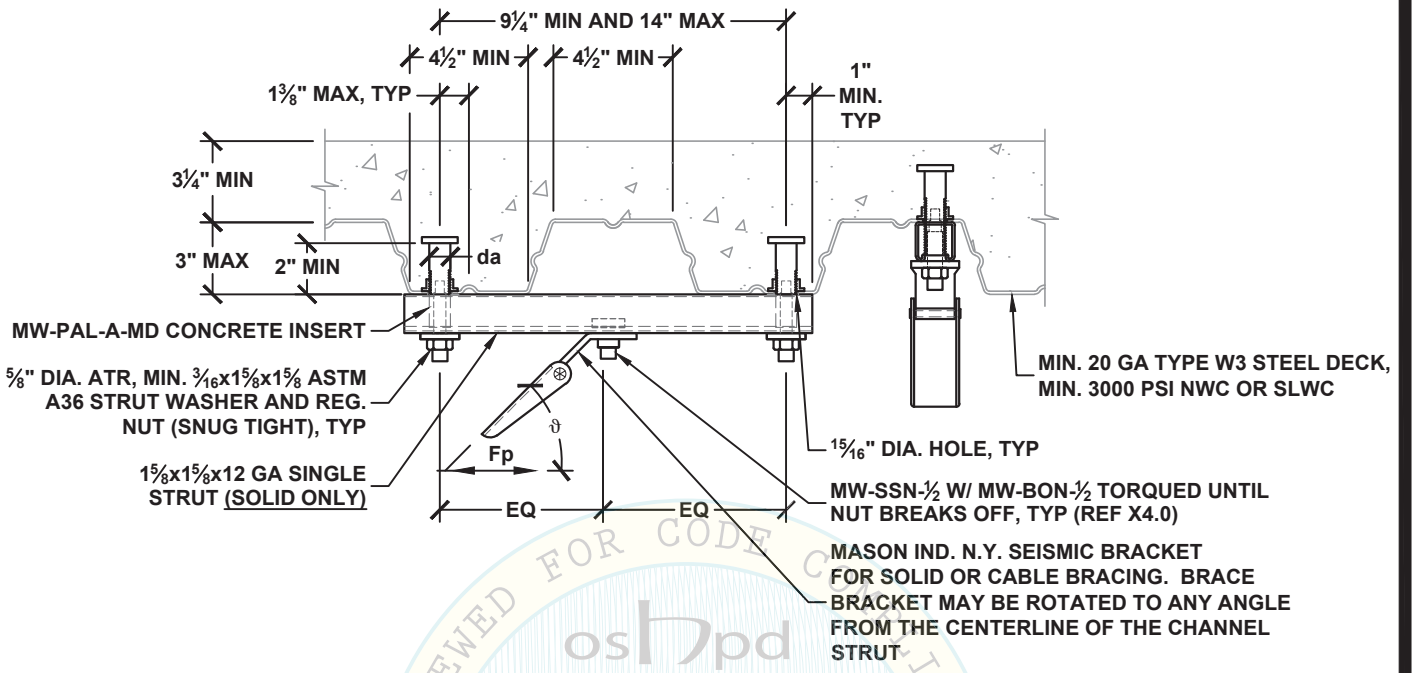

REVIEWED FOR CODE COMPLIANCE
CALIFORNIA BUILDING CODE 2013
oshpd
OPM-0043-13
BY: Jeffrey Y. Kikumoto
DATE: 06/23/2016

BRACE BRACKET ATTACHMENT TYPE	ALLOWABLE LATERAL LOAD Fp LBS	$\Omega_0 = 2.5$ [1] BRACE BRACKET ATTACHMENT TYPE	$\Omega_0 = 2.5$ [1] ALLOWABLE LATERAL LOAD Fp LBS	MAX BRACE RANGE ϑ	MW-PAL-A-MD CONCRETE INSERT (REFER TO PAGES X5.0.MD & X5.1) DIA. da INCH	MIN. SPACING Smin INCH	MIN. END DIST. Cmin INCH
50A TO 50G	620	50A TO 50G	620	30°- 45°	⅞	6¾	5¼
50A TO 50F	530	50A TO 50E	420	46°- 60°			

SEE DETAIL N0.00 FOR SECTION NOTES

[1] OVERSTRENGTH FACTOR AS REQUIRED FOR ANCHORAGE TO CONCRETE.

MASON WEST, INC.
1601 E. Miraloma Ave. Placentia, CA 92870
TEL (714) 630 - 0701, www.masonwest.com

Jiefu "Jeff" Zhang, SE
California SE No. S5270

PAGE
N2.12.1

SEISMIC BRACKET ATTACHMENT TO CONCRETE FILLED METAL DECK WITH (2) MW-PAL-A-MD CONCRETE INSERTS

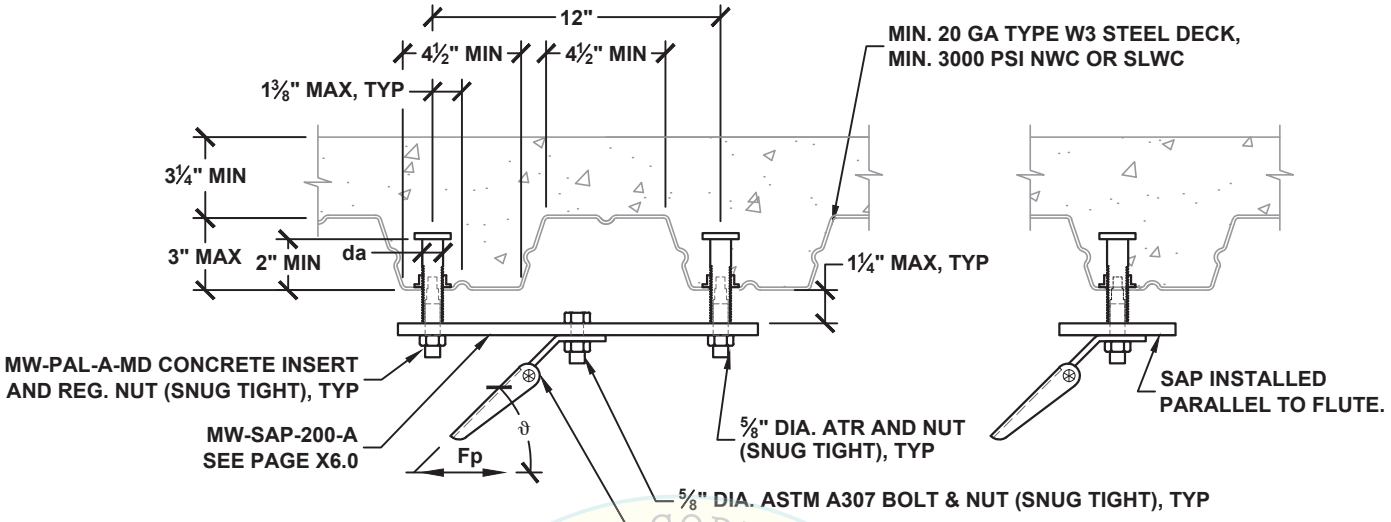

REVIEWED FOR CODE COMPLIANCE
CALIFORNIA BUILDING CODE 2013
oshpd
OPM-0043-13
BY: Jeffrey Y. Kikumoto
DATE: 06/23/2016

BRACE BRACKET ATTACHMENT TYPE	ALLOWABLE LATERAL LOAD Fp LBS	$\Omega_0 = 2.5$ [1] BRACE BRACKET ATTACHMENT TYPE	$\Omega_0 = 2.5$ [1] ALLOWABLE LATERAL LOAD Fp LBS	MAX BRACE RANGE ϑ	MW-PAL-A-MD CONCRETE INSERT (REFER TO PAGES X5.0.MD & X5.1) DIA. da INCH	MIN. SPACING Smin INCH	MIN. END DIST. Cmin INCH
63A TO 63J	880	63A TO 63E	420	30°- 45°	⅞	6¾	5¼
63A TO 63G	620	63A TO 63D	340	46°- 60°			

SEE DETAIL N0.00 FOR SECTION NOTES

[1] OVERSTRENGTH FACTOR AS REQUIRED FOR ANCHORAGE TO CONCRETE.

MASON WEST, INC.
1601 E. Miraloma Ave. Placentia, CA 92870
TEL (714) 630 - 0701, www.masonwest.com

Jiefu "Jeff" Zhang, SE
California SE No. S5270

PAGE
N2.13

SEISMIC BRACKET ATTACHMENT TO CONCRETE FILLED METAL DECK WITH (4) MW-PAL-A-MD CONCRETE INSERTS

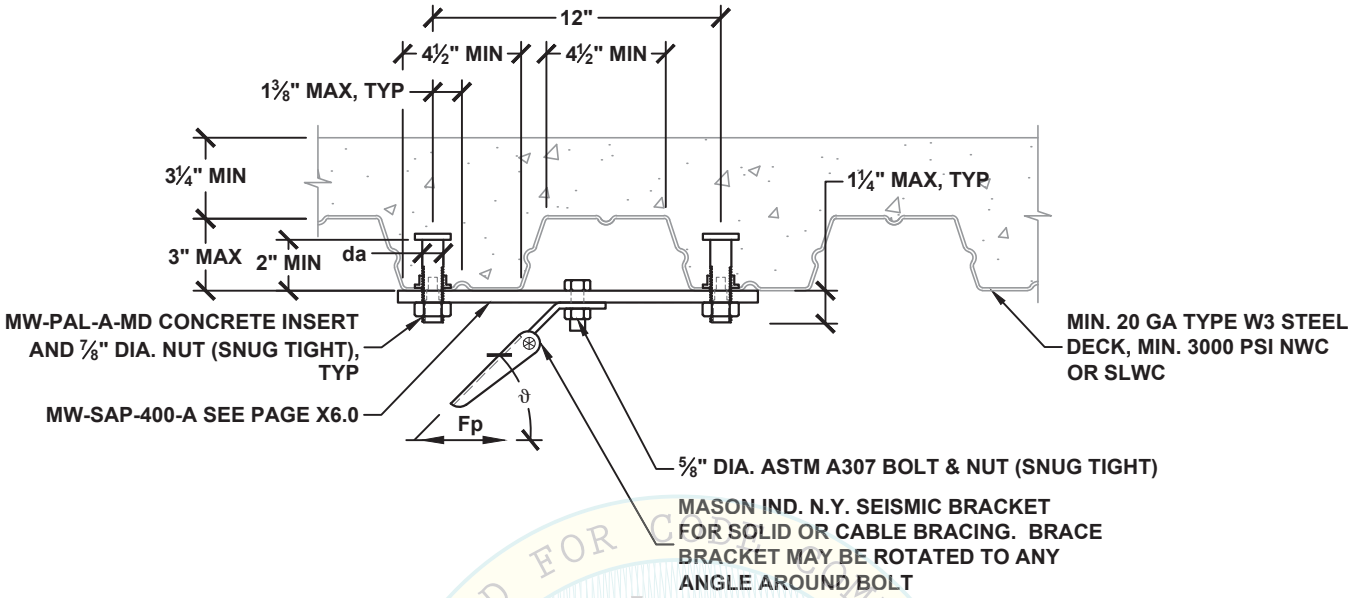

OPM-0043-13
BY: Jeffrey Y. Kikumoto
DATE: 06/23/2016

BRACE BRACKET ATTACHMENT TYPE	ALLOWABLE LATERAL LOAD FpLBS	$\Omega_0 = 2.5$ [1] BRACE BRACKET ATTACHMENT TYPE	$\Omega_0 = 2.5$ [1] ALLOWABLE LATERAL LOAD FpLBS	MAX BRACE RANGE ϑ	MW-PAL-A-MD CONCRETE INSERT (REFER TO PAGES X5.0.MD & X5.1) DIA. da INCH	MIN. SPACING Smin INCH	MIN. END DIST. Cmin INCH
63A TO 63N	2280	63A TO 63L	1280	30°- 45°	⅞	6¾	5¼
63A TO 63L	1320	63A TO 63J	850	46°- 60°			

SEE DETAIL N0.00 FOR SECTION NOTES

[1] OVERSTRENGTH FACTOR AS REQUIRED FOR ANCHORAGE TO CONCRETE.

MASON WEST, INC.
1601 E. Miraloma Ave. Placentia, CA 92870
TEL (714) 630 - 0701, www.masonwest.com

Jiefu "Jeff" Zhang, SE
California SE No. S5270

PAGE
N2.14

SEISMIC BRACKET ATTACHMENT TO CONCRETE FILLED METAL DECK WITH (1) HILTI KB-TZ CONCRETE ANCHOR

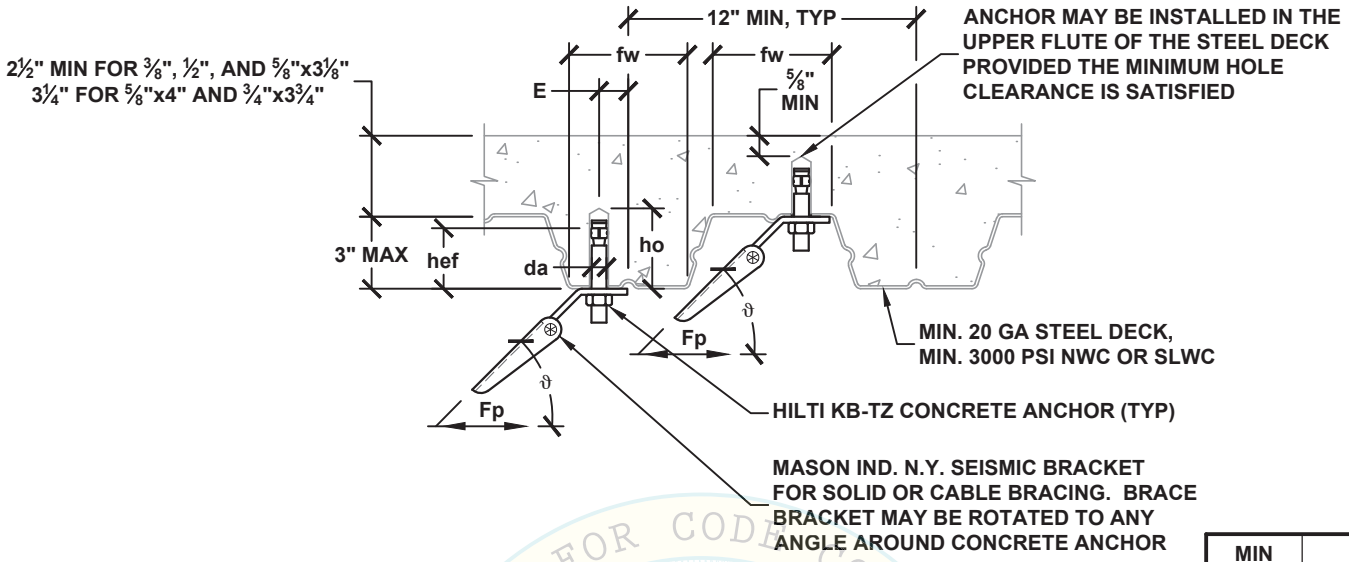

MIN FLUTE WIDTH fw INCH	MAX OFFSET E INCH
3⅞	15/16
4½	1

BRACE BRACKET ATTACHMENT TYPE	ALLOWABLE LATERAL LOAD Fp LBS	$\Omega_0 = 2.5$ [1] BRACE BRACKET ATTACHMENT TYPE	ALLOWABLE LATERAL LOAD Fp LBS	MAX BRACE RANGE ϑ	HILTI KB-TZ CONCRETE ANCHOR (ICC ESR-1917) SPECIAL INSPECTION REQ'D DIA. da INCH	MIN. EFF. EMBED. hef INCH	MIN. HOLE DEPTH ho INCH	MIN. SPACING Smin INCH	MIN. END DIST. Cmin INCH	TORQUE REQ'D FT-LBS
38A TO 38C	190	38A TO 38B	160	30°- 45°	⅜	2	2⅝	MAX OF: 3*hef OR 1.5*FLUTE WIDTH	3⅜	25
38A TO 38A	120	38A TO 38A	110	46°- 60°						
50A TO 50C	200	50A TO 50B	160	30°- 45°	½	2	2⅝		3⅜	40
50A TO 50A	120	50A TO 50A	110	46°- 60°						
50A TO 50E	400	50A TO 50E	350	30°- 45°	½	3¼	4		4⅞	40
50A TO 50C	230	50A TO 50C	230	46°- 60°						
63A TO 63D	320	63A TO 63D	290	30°- 45°	⅝	3⅛	3¾		4 11/16	60
63A TO 63C	180	63A TO 63C	190	46°- 60°						
63A TO 63G	580	63A TO 63F	490	30°- 45°	⅝	4	4¾		6	60
63A TO 63D	340	63A TO 63D	330	46°- 60°						
75A TO 75F	490	75A TO 75E	430	30°- 45°	¾	3¾	4½		5⅝	110
75A TO 75D	280	75A TO 75D	290	46°- 60°						

SEE DETAIL N0.00 FOR SECTION NOTES

[1] OVERSTRENGTH FACTOR AS REQUIRED FOR ANCHORAGE TO CONCRETE.

OSHPD
OPM-0043-13
REVIEWED FOR CODE COMPLIANCE BY: Jeffrey Y. Kikumoto
DATE: 06/23/2016
CALIFORNIA BUILDING CODE

MASON WEST, INC.
1601 E. Miraloma Ave. Placentia, CA 92870
TEL (714) 630 - 0701, www.masonwest.com

Jiefu "Jeff" Zhang, SE
California SE No. S5270

PAGE **N2.20**

SEISMIC BRACKET ATTACHMENT TO CONCRETE FILLED METAL DECK WITH (2) HILTI KB-TZ CONCRETE ANCHORS

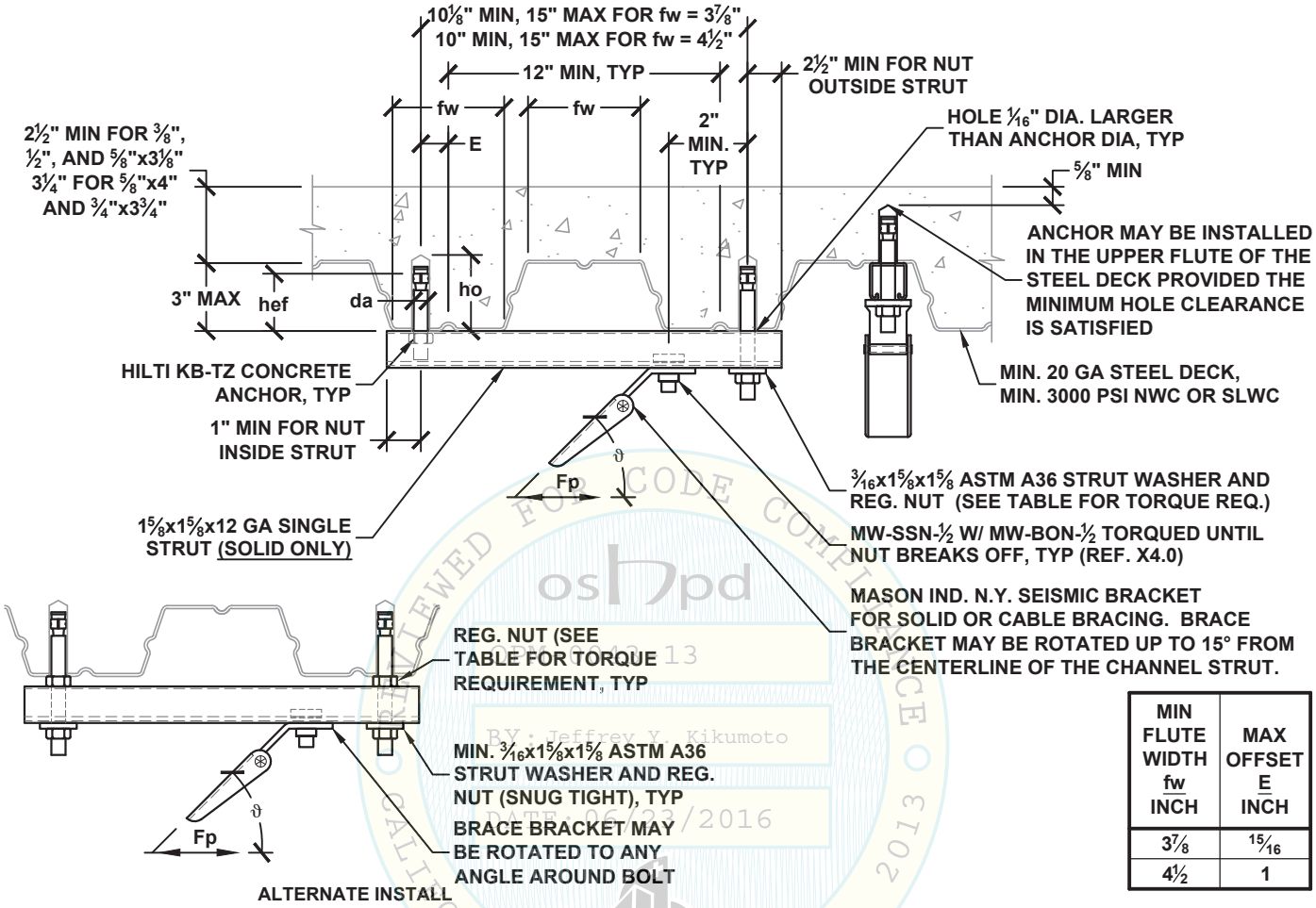

MIN FLUTE WIDTH fw INCH	MAX OFFSET E INCH
3⅞	15/16
4½	1

BRACE BRACKET ATTACHMENT TYPE	ALLOWABLE LATERAL LOAD Fp LBS	Ω0 = 2.5 [1] BRACE BRACKET ATTACHMENT TYPE	ALLOWABLE LATERAL LOAD Fp LBS	MAX BRACE RANGE ϑ	HILTI KB-TZ CONCRETE ANCHOR (ICC ESR-1917) SPECIAL INSPECTION REQ'D DIA. da INCH	MIN. EFF. EMBED. hef INCH	MIN. HOLE DEPTH ho INCH	MIN. SPACING Smin INCH	MIN. END DIST. Cmin INCH	TORQUE REQ'D FT-LBS
50A TO 50G	620	50A TO 50E	370	30°- 45°	½	3¼	4	MAX OF: 3*hef OR 1.5*FLUTE WIDTH	4⅞	40
50A TO 50F	530	50A TO 50D	260	46°- 60°						
50A TO 50G	620	50A TO 50D	300	30°- 45°	⅝	3⅛	3¾		4 11/16	60
50A TO 50E	430	50A TO 50C	200	46°- 60°						
50A TO 50G	620	50A TO 50F	540	30°- 45°	⅝	4	4¾		6	60
50A TO 50F	530	50A TO 50E	370	46°- 60°						

SEE DETAIL N0.00 FOR SECTION NOTES

[1] OVERSTRENGTH FACTOR AS REQUIRED FOR ANCHORAGE TO CONCRETE.

MASON WEST, INC.
1601 E. Miraloma Ave. Placentia, CA 92870
TEL (714) 630 - 0701, www.masonwest.com

Jiefu "Jeff" Zhang, SE
California SE No. S5270

PAGE
N2.21

OSHPD REVIEWED FOR CODE COMPLIANCE 2013 CALIFORNIA BUILDING CODE
OPM-0043-13
BY: Jeffrey Y. Kikumoto
DATE: 06/23/2016

SEISMIC BRACKET ATTACHMENT TO CONCRETE FILLED METAL DECK WITH (2) HILTI KB-TZ CONCRETE ANCHORS

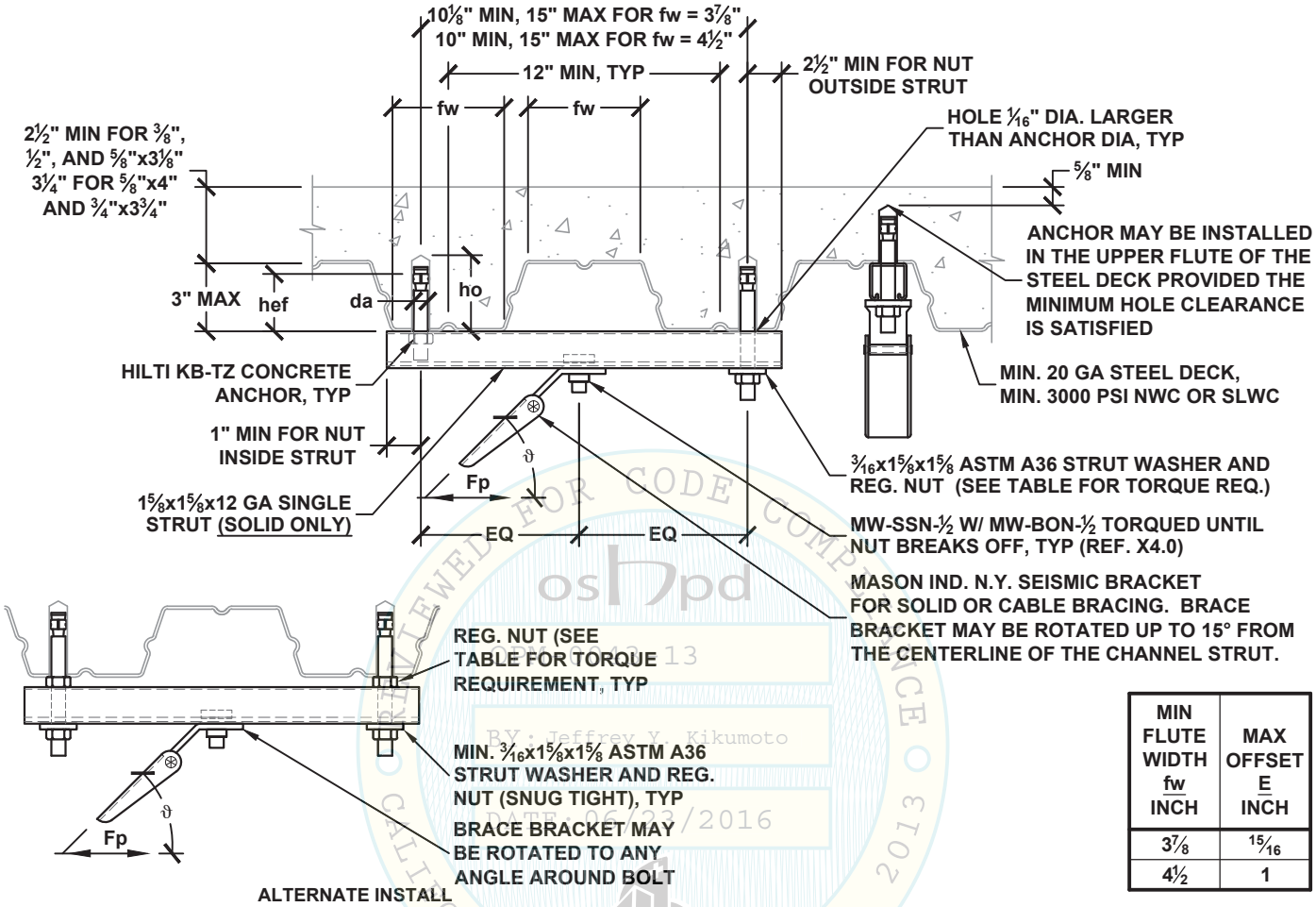

MIN FLUTE WIDTH fw INCH	MAX OFFSET E INCH
3⅞	15/16
4½	1

BRACE BRACKET ATTACHMENT TYPE	ALLOWABLE LATERAL LOAD Fp LBS	Ω0 = 2.5 [1] BRACE BRACKET ATTACHMENT TYPE	ALLOWABLE LATERAL LOAD Fp LBS	MAX BRACE RANGE ϑ	HILTI KB-TZ CONCRETE ANCHOR (ICC ESR-1917) SPECIAL INSPECTION REQ'D DIA. da INCH	MIN. EFF. EMBED. hef INCH	MIN. HOLE DEPTH ho INCH	MIN. SPACING Smin INCH	MIN. END DIST. Cmin INCH	TORQUE REQ'D FT-LBS
50A TO 50G	620	50A TO 50G	620	30°- 45°	½	3¼	4	MAX OF: 3*hef OR 1.5*FLUTE WIDTH	4⅞	40
50A TO 50F	530	50A TO 50F	530	46°- 60°						
50A TO 50G	620	50A TO 50G	620	30°- 45°	⅝	3⅛	3¾		4 11/16	60
50A TO 50F	530	50A TO 50F	530	46°- 60°						
50A TO 50G	620	50A TO 50G	620	30°- 45°	⅝	4	4¾		6	60
50A TO 50F	530	50A TO 50F	530	46°- 60°						

SEE DETAIL N0.00 FOR SECTION NOTES

[1] OVERSTRENGTH FACTOR AS REQUIRED FOR ANCHORAGE TO CONCRETE.

MASON WEST, INC.
1601 E. Miraloma Ave. Placentia, CA 92870
TEL (714) 630 - 0701, www.masonwest.com

Jiefu "Jeff" Zhang, SE
California SE No. S5270

PAGE
N2.21.1

OSHPD REVIEWED FOR CODE COMPLIANCE 2013 CALIFORNIA BUILDING CODE
OPM-0043-13
BY: Jeffrey Y. Kikumoto
DATE: 06/23/2016

SEISMIC BRACKET ATTACHMENT TO CONCRETE FILLED METAL DECK WITH (2) HILTI KB-TZ CONCRETE ANCHORS

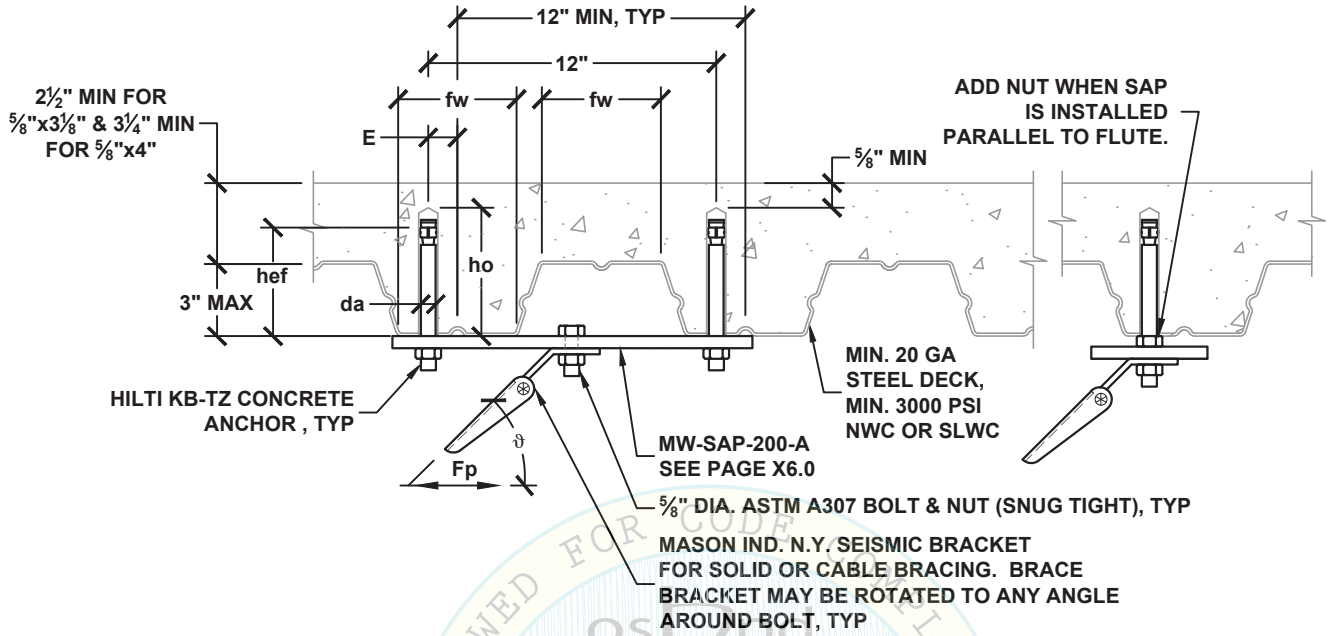

REVIEWED FOR CODE COMPLIANCE
CALIFORNIA BUILDING CODE 2013
OSHPD
OPM-0043-13
BY: Jeffrey Y. Kikumoto
DATE: 06/23/2016

MIN FLUTE WIDTH fw INCH	MAX OFFSET E INCH
3⅞	15⁄16
4½	1

BRACE BRACKET ATTACHMENT TYPE	ALLOWABLE LATERAL LOAD Fp LBS	Ω0 = 2.5 [1] BRACE BRACKET ATTACHMENT TYPE	ALLOWABLE LATERAL LOAD Fp LBS	MAX BRACE RANGE ϑ	HILTI KB-TZ CONCRETE ANCHOR (ICC ESR-1917) SPECIAL INSPECTION REQ'D DIA. da INCH	MIN. EFF. EMBED. hef INCH	MIN. HOLE DEPTH ho INCH	MIN. SPACING Smin INCH	MIN. END DIST. Cmin INCH	TORQUE REQ'D FT-LBS
63A TO 63K	1080	63A TO 63G	580	30°- 45°	⅝	3⅛	3¾	MAX OF: 3*hef OR 1.5*FLUTE WIDTH	4 11⁄16	60
63A TO 63G	620	63A TO 63E	380	46°- 60°						
63A TO 63K	1080	63A TO 63J	980	30°- 45°	⅝	4	4¾		6	60
63A TO 63G	620	63A TO 63G	620	46°- 60°						

SEE DETAIL N0.00 FOR SECTION NOTES

[1] OVERSTRENGTH FACTOR AS REQUIRED FOR ANCHORAGE TO CONCRETE.

MASON WEST, INC.
1601 E. Miraloma Ave. Placentia, CA 92870
TEL (714) 630 - 0701, www.masonwest.com

Jiefu "Jeff" Zhang, SE
California SE No. S5270

PAGE
N2.22

SEISMIC BRACKET ATTACHMENT TO CONCRETE FILLED METAL DECK WITH (4) HILTI KB-TZ CONCRETE ANCHORS

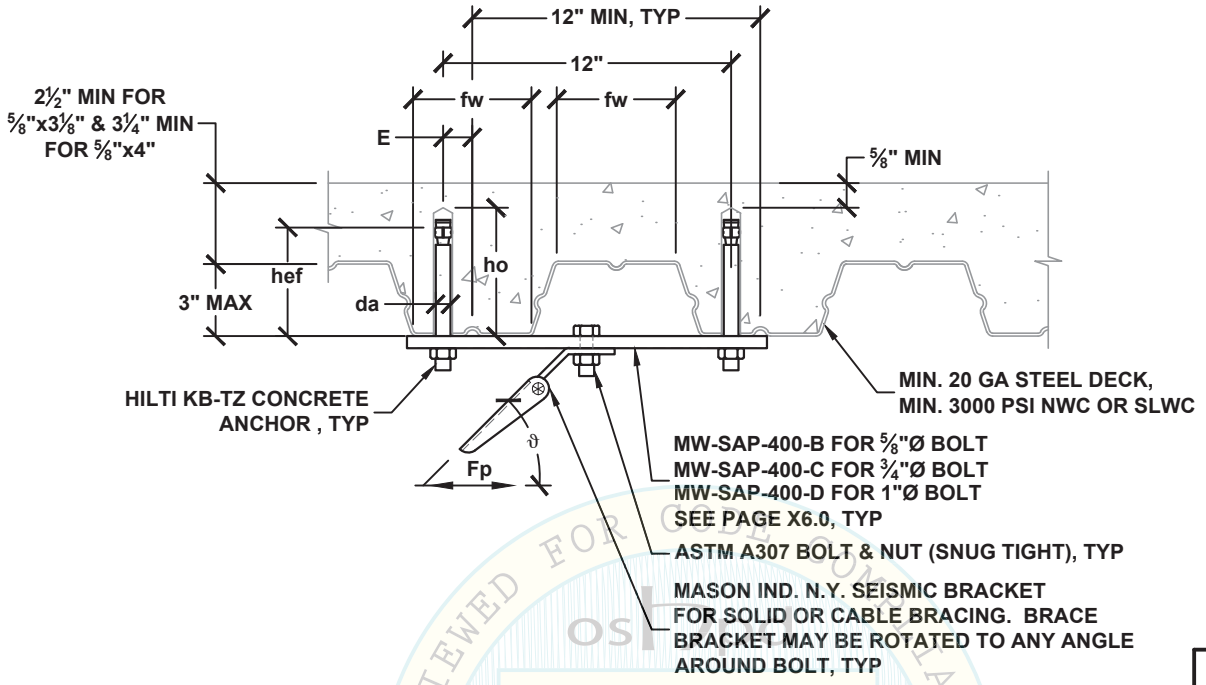

MIN FLUTE WIDTH fw INCH	MAX OFFSET E INCH
3⅞	15⅝16
4½	1

BRACE BRACKET ATTACHMENT TYPE	ALLOWABLE LATERAL LOAD Fp LBS	$\Omega_0 = 2.5$ [1] BRACE BRACKET ATTACHMENT TYPE	$\Omega_0 = 2.5$ [1] ALLOWABLE LATERAL LOAD Fp LBS	MAX BRACE RANGE ϑ	BOLT DIA. INCH	HILTI KB-TZ CONCRETE ANCHOR (ICC ESR-1917) SPECIAL INSPECTION REQ'D DIA. da INCH	MIN. EFF. EMBED. hef INCH	MIN. HOLE DEPTH ho INCH	MIN. SPACING Smin INCH	MIN. END DIST. Cmin INCH	TORQUE REQ'D FT-LBS
63A TO 63N	2430	63A TO 63K	1170	30°- 45°	⅝	⅝	3⅛	3¾	MAX OF: 3*hef OR 1.5*FLUTE WIDTH	4 11⁄16	60
63A TO 63L	1580	63A TO 63H	760	46°- 60°	⅝						
63A TO 63P	3080	63A TO 63M	1970	30°- 45°	⅝	⅝	4	4¾		6	60
63A TO 63N	2080	63A TO 63L	1340	46°- 60°	⅝						
75A TO 75Q	3500	75A TO 75M	1970	30°- 45°	¾						
75A TO 75N	2020	75A TO 75L	1340	46°- 60°	¾						
100A TO 100Q	3500	100A TO 100M	1970	30°- 45°	1						
100A TO 100N	2020	100A TO 100L	1340	46°- 60°	1						

SEE DETAIL N0.00 FOR SECTION NOTES

[1] OVERSTRENGTH FACTOR AS REQUIRED FOR ANCHORAGE TO CONCRETE.

REVIEWED FOR CODE COMPLIANCE
OSHPD
OPM-0043-13
BY: Jeffrey Y. Kikumoto
DATE: 06/23/2016
CALIFORNIA BUILDING CODE, 2013

MASON WEST, INC.
1601 E. Miraloma Ave. Placentia, CA 92870
TEL (714) 630 - 0701, www.masonwest.com

Jiefu "Jeff" Zhang, SE
California SE No. S5270

PAGE
N2.23

SEISMIC BRACKET ATTACHMENT TO CONCRETE FILLED METAL DECK WITH (1) HILTI KB-TZ CONCRETE ANCHOR

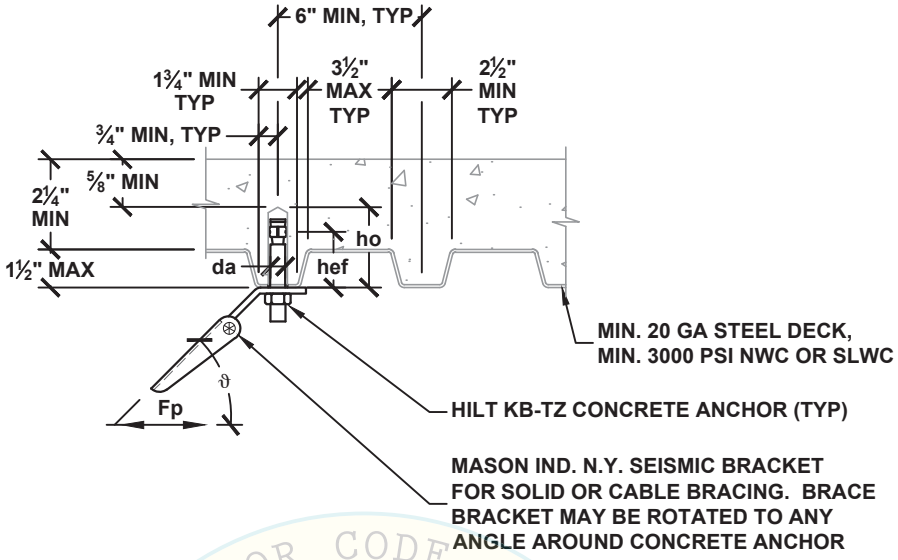

REVIEWED FOR CODE COMPLIANCE
CALIFORNIA BUILDING CODE 2013
oshpd
OPM-0043-13
BY: Jeffrey Y. Kikumoto
DATE: 06/23/2016

BRACE BRACKET ATTACHMENT TYPE	ALLOWABLE LATERAL LOAD Fp LBS	$\Omega_0 = 2.5$ [1] BRACE BRACKET ATTACHMENT TYPE	ALLOWABLE LATERAL LOAD Fp LBS	MAX BRACE RANGE ϑ	HILTI KB-TZ CONCRETE ANCHOR (ICC ESR-1917) SPECIAL INSPECTION REQ'D DIA. da INCH	MIN. EFF. EMBED. hef INCH	MIN. HOLE DEPTH ho INCH	MIN. SPACING Smin INCH	MIN. END DIST. Cmin INCH	TORQUE REQ'D FT-LBS
38A TO 38C	230	38A TO 38C	190	30°- 45°	⅜	2	2⅝	6	3	25
38A TO 38B	140	38A TO 38B	130	46°- 60°						
50A TO 50C	210	50A TO 50C	190	30°- 45°	½	2	2⅝	6	3	40
50A TO 50A	120	50A TO 50A	120	46°- 60°						
50A TO 50E	440	50A TO 50E	380	30°- 45°	½	3¼	4	9¾	4⅞	40
50A TO 50D	260	50A TO 50D	260	46°- 60°						
63A TO 63E	440	63A TO 63E	380	30°- 45°	⅝	3⅛	3¾	9⅜	4¾	60
63A TO 63D	250	63A TO 63D	250	46°- 60°						

SEE DETAIL N0.00 FOR SECTION NOTES

[1] OVERSTRENGTH FACTOR AS REQUIRED FOR ANCHORAGE TO CONCRETE.

MASON WEST, INC.
1601 E. Miraloma Ave. Placentia, CA 92870
TEL (714) 630 - 0701, www.masonwest.com

Jiefu "Jeff" Zhang, SE
California SE No. S5270

PAGE
N2.24

SEISMIC BRACKET ATTACHMENT TO CONCRETE FILLED METAL DECK WITH (2) HILTI KB-TZ CONCRETE ANCHORS

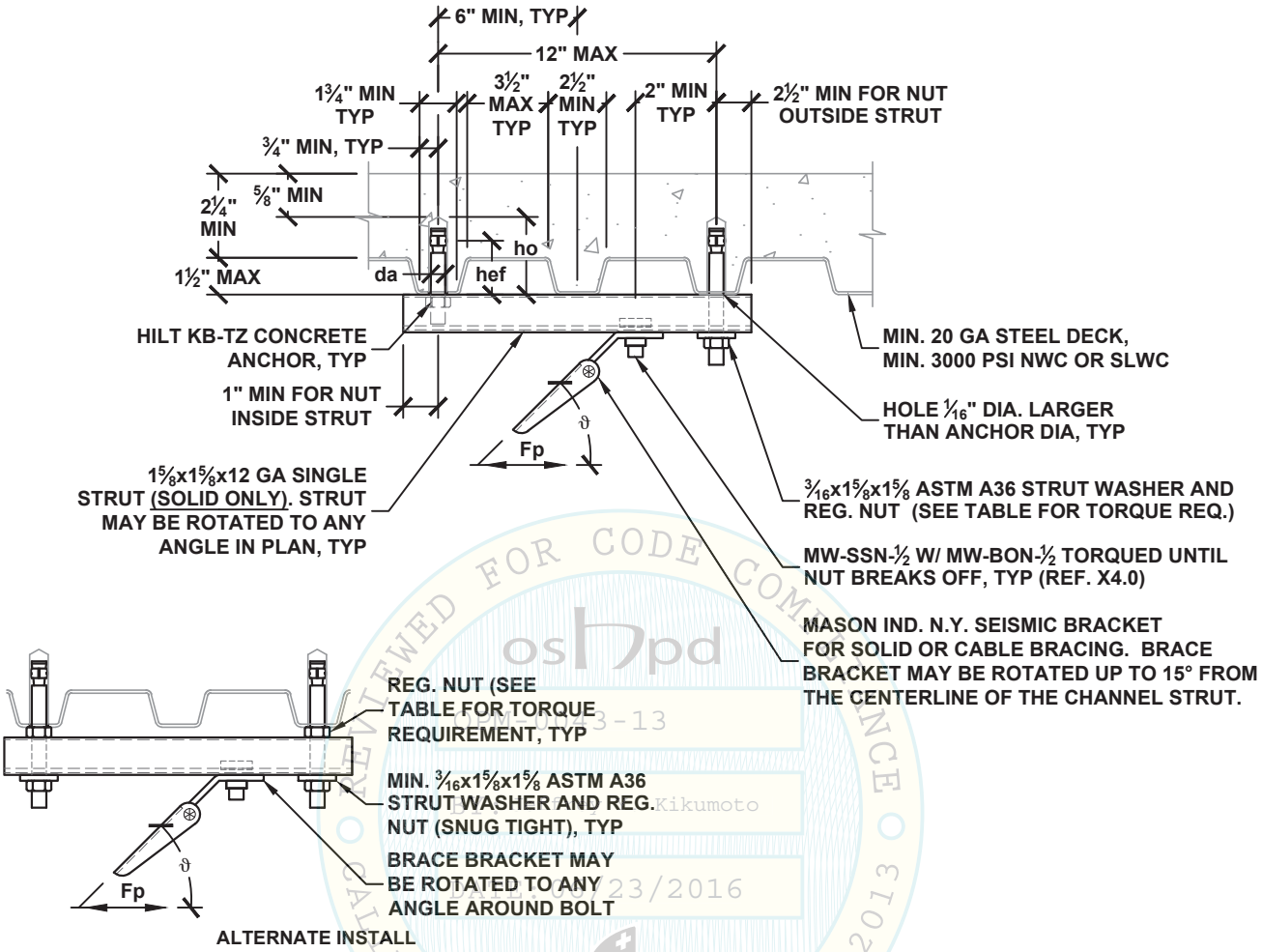

ALTERNATE INSTALL

BRACE BRACKET ATTACHMENT TYPE	ALLOWABLE LATERAL LOAD Fp LBS	$\Omega_0 = 2.5$ [1] BRACE BRACKET ATTACHMENT TYPE	ALLOWABLE LATERAL LOAD Fp LBS	MAX BRACE RANGE ϑ	HILTI KB-TZ CONCRETE ANCHOR (ICC ESR-1917) SPECIAL INSPECTION REQ'D DIA. da INCH	MIN. EFF. EMBED. hef INCH	MIN. HOLE DEPTH ho INCH	MIN. SPACING Smin INCH	MIN. END DIST. Cmin INCH	TORQUE REQ'D FT-LBS
50A TO 50F	470	50A TO 50C	220	30°- 45°	⅜	2	2⅝	6	3	25
50A TO 50D	330	50A TO 50B	160	46°- 60°						
50A TO 50H	620	50A TO 50F	510	30°- 45°	½	3¼	4	9¾	4⅞	40
50A TO 50G	530	50A TO 50E	390	46°- 60°						

SEE DETAIL N0.00 FOR SECTION NOTES

[1] OVERSTRENGTH FACTOR AS REQUIRED FOR ANCHORAGE TO CONCRETE.

MASON WEST, INC.
1601 E. Miraloma Ave. Placentia, CA 92870
TEL (714) 630 - 0701, www.masonwest.com

Jiefu "Jeff" Zhang, SE
California SE No. S5270

PAGE
N2.25

REVIEWED FOR CODE COMPLIANCE CALIFORNIA BUILDING CODE 2013
OPM-0043-13
Reviewed by: Jeffrey Kikumoto
Date: 06/23/2016

SEISMIC BRACKET ATTACHMENT TO CONCRETE FILLED METAL DECK WITH (2) HILTI KB-TZ CONCRETE ANCHORS

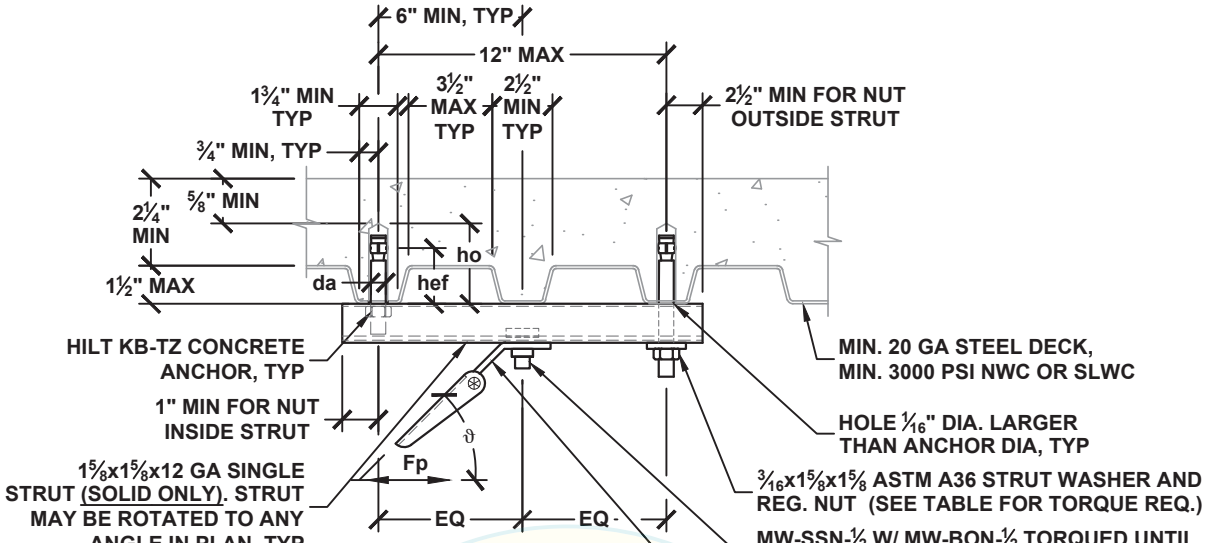

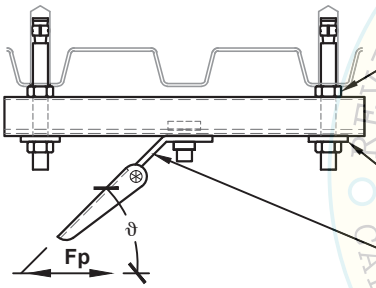

ALTERNATE INSTALL

BRACE BRACKET ATTACHMENT TYPE	ALLOWABLE LATERAL LOAD Fp LBS	$\Omega_0 = 2.5$ [1] BRACE BRACKET ATTACHMENT TYPE	ALLOWABLE LATERAL LOAD Fp LBS	MAX BRACE RANGE ϑ	HILTI KB-TZ CONCRETE ANCHOR (ICC ESR-1917) SPECIAL INSPECTION REQ'D DIA. da INCH	MIN. EFF. EMBED. hef INCH	MIN. HOLE DEPTH ho INCH	MIN. SPACING Smin INCH	MIN. END DIST. Cmin INCH	TORQUE REQ'D FT-LBS
50A TO 50F	620	50A TO 50E	390	30°- 45°	⅜	2	2⅝	6	3	25
50A TO 50D	530	50A TO 50D	270	46°- 60°						
50A TO 50H	620	50A TO 50G	620	30°- 45°	½	3¼	4	9¾	4⅞	40
50A TO 50G	530	50A TO 50F	510	46°- 60°						

SEE DETAIL N0.00 FOR SECTION NOTES

[1] OVERSTRENGTH FACTOR AS REQUIRED FOR ANCHORAGE TO CONCRETE.

MASON WEST, INC.
1601 E. Miraloma Ave. Placentia, CA 92870
TEL (714) 630 - 0701, www.masonwest.com

Jiefu "Jeff" Zhang, SE
California SE No. S5270

PAGE
N2.25.1

REVIEWED FOR CODE COMPLIANCE CALIFORNIA BUILDING CODE 2013
OSHPD
OPM-0043-13
Reviewed by: Jeffrey Kikumoto
Date: 06/23/2016

SEISMIC BRACKET ATTACHMENT TO CONCRETE FILLED METAL DECK WITH (1) POWER-STUD+ SD1 CONCRETE ANCHOR

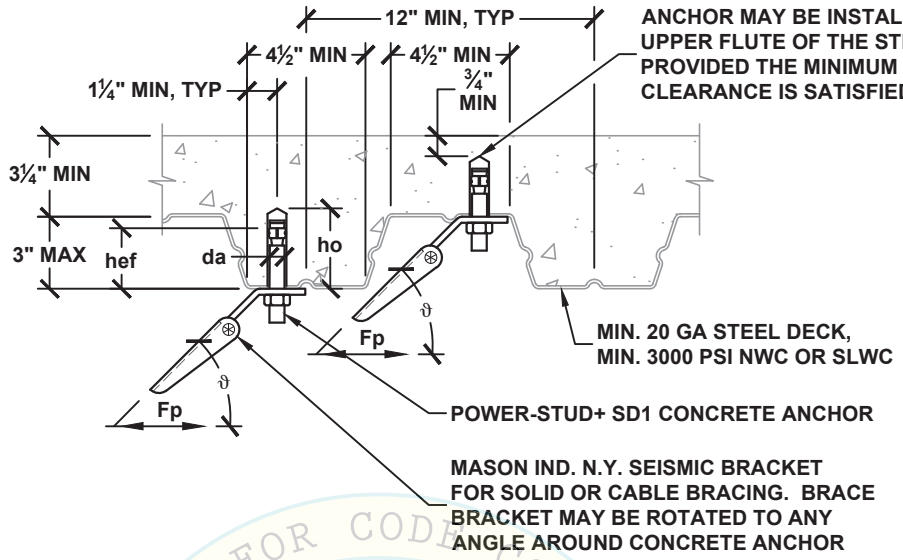

REVIEWED FOR CODE COMPLIANCE
CALIFORNIA BUILDING CODE 2013
oshpd
OPM-0043-13
BY: Jeffrey Y. Kikumoto
DATE: 06/23/2016

BRACE BRACKET ATTACHMENT TYPE	ALLOWABLE LATERAL LOAD Fp LBS	$\Omega_0 = 2.5$ [1] BRACE BRACKET ATTACHMENT TYPE	ALLOWABLE LATERAL LOAD Fp LBS	MAX BRACE RANGE ϑ	POWER-STUD+ SD1 CONCRETE ANCHOR (ICC ESR-2818) SPECIAL INSPECTION REQ'D DIA. da INCH	MIN. EFF. EMBED. hef INCH	MIN. HOLE DEPTH ho INCH	MIN. SPACING Smin INCH	MIN. END DIST. Cmin INCH	TORQUE REQ'D FT-LBS
38A TO 38C	210	38A TO 38C	180	30°- 45°	⅜	2	2⅝	6¾	3⅜	20
38A TO 38A	120	38A TO 38A	120	46°- 60°						
50A TO 50D	330	50A TO 50D	260	30°- 45°	½	2	2¾	6¾	3⅜	40
50A TO 50C	200	50A TO 50C	190	46°- 60°						
63A TO 63D	310	63A TO 63D	280	30°- 45°	⅝	2¾	3¾	8¼	4⅛	80
63A TO 63C	180	63A TO 63C	180	46°- 60°						
75A TO 75E	440	75A TO 75E	380	30°- 45°	¾	3⅛	4¼	9⅜	4¾	110
75A TO 75D	250	75A TO 75D	250	46°- 60°						

SEE DETAIL N0.00 FOR SECTION NOTES

[1] OVERSTRENGTH FACTOR AS REQUIRED FOR ANCHORAGE TO CONCRETE.

MASON WEST, INC.
1601 E. Miraloma Ave. Placentia, CA 92870
TEL (714) 630 - 0701, www.masonwest.com

Jiefu "Jeff" Zhang, SE
California SE No. S5270

PAGE
N2.30

SEISMIC BRACKET ATTACHMENT TO CONCRETE FILLED METAL DECK WITH (2) POWER-STUD+ SD1 CONCRETE ANCHORS

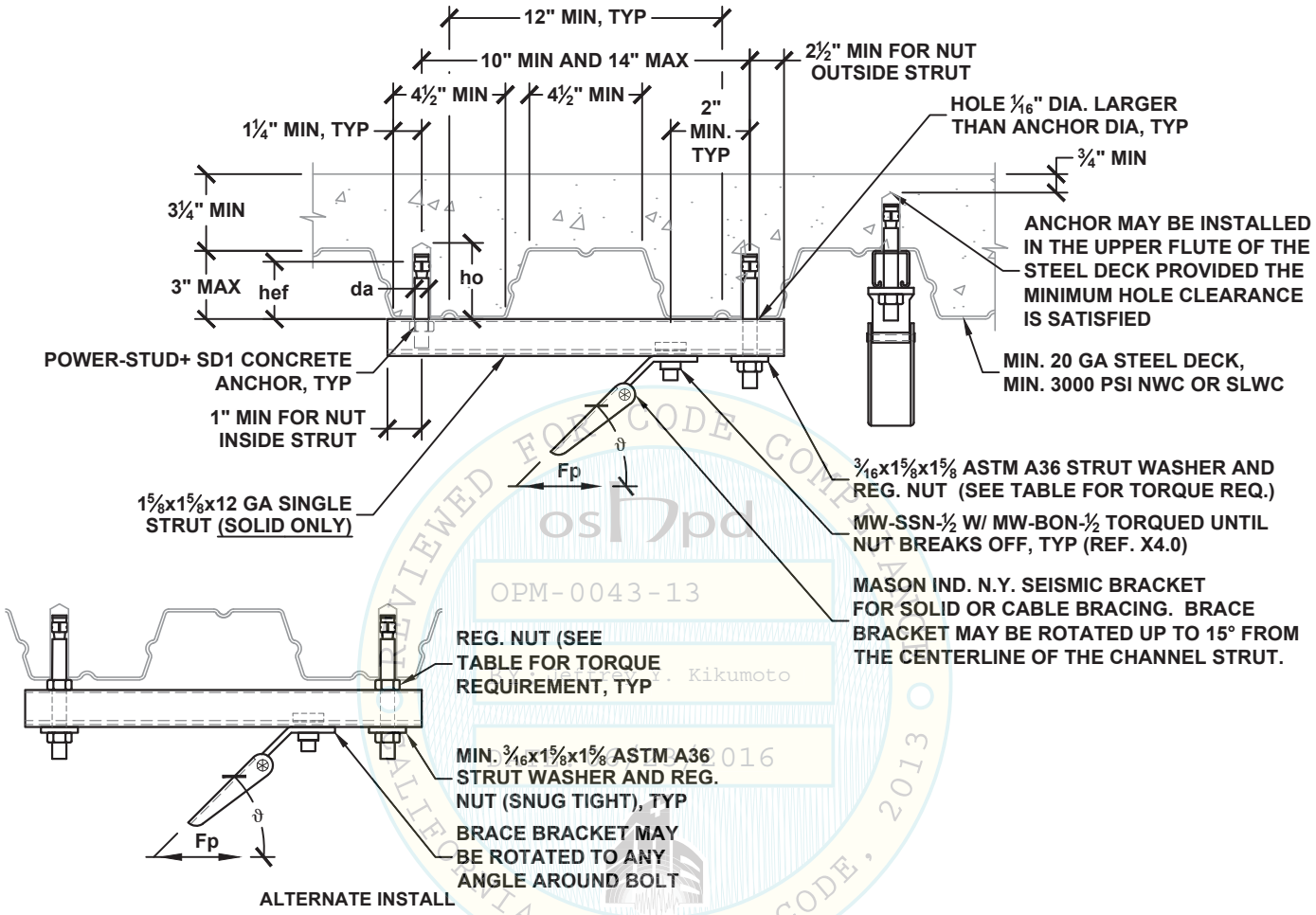

REVIEWED FOR CODE COMPLIANCE
CALIFORNIA BUILDING CODE, 2013
osDpd
OPM-0043-13
Reviewed by: Jeffrey Kikumoto
2016

BRACE BRACKET ATTACHMENT TYPE	ALLOWABLE LATERAL LOAD Fp LBS	$\Omega_0 = 2.5$ [1] BRACE BRACKET ATTACHMENT TYPE	$\Omega_0 = 2.5$ [1] ALLOWABLE LATERAL LOAD Fp LBS	MAX BRACE RANGE ϑ	POWER-STUD+ SD1 CONCRETE ANCHOR (ICC ESR-2818) SPECIAL INSPECTION REQ'D DIA. da INCH	MIN. EFF. EMBED. hef INCH	MIN. HOLE DEPTH ho INCH	MIN. SPACING Smin INCH	MIN. END DIST. Cmin INCH	TORQUE REQ'D FT-LBS
50A TO 50G	620	50A TO 50D	310	30°- 45°	½	2	2¾	6¾	3⅜	40
50A TO 50F	450	50A TO 50C	220	46°- 60°						

SEE DETAIL N0.00 FOR SECTION NOTES

[1] OVERSTRENGTH FACTOR AS REQUIRED FOR ANCHORAGE TO CONCRETE.

MASON WEST, INC.
1601 E. Miraloma Ave. Placentia, CA 92870
TEL (714) 630 - 0701, www.masonwest.com

Jiefu "Jeff" Zhang, SE
California SE No. S5270

PAGE
N2.31

SEISMIC BRACKET ATTACHMENT TO CONCRETE FILLED METAL DECK WITH (2) POWER-STUD+ SD1 CONCRETE ANCHORS

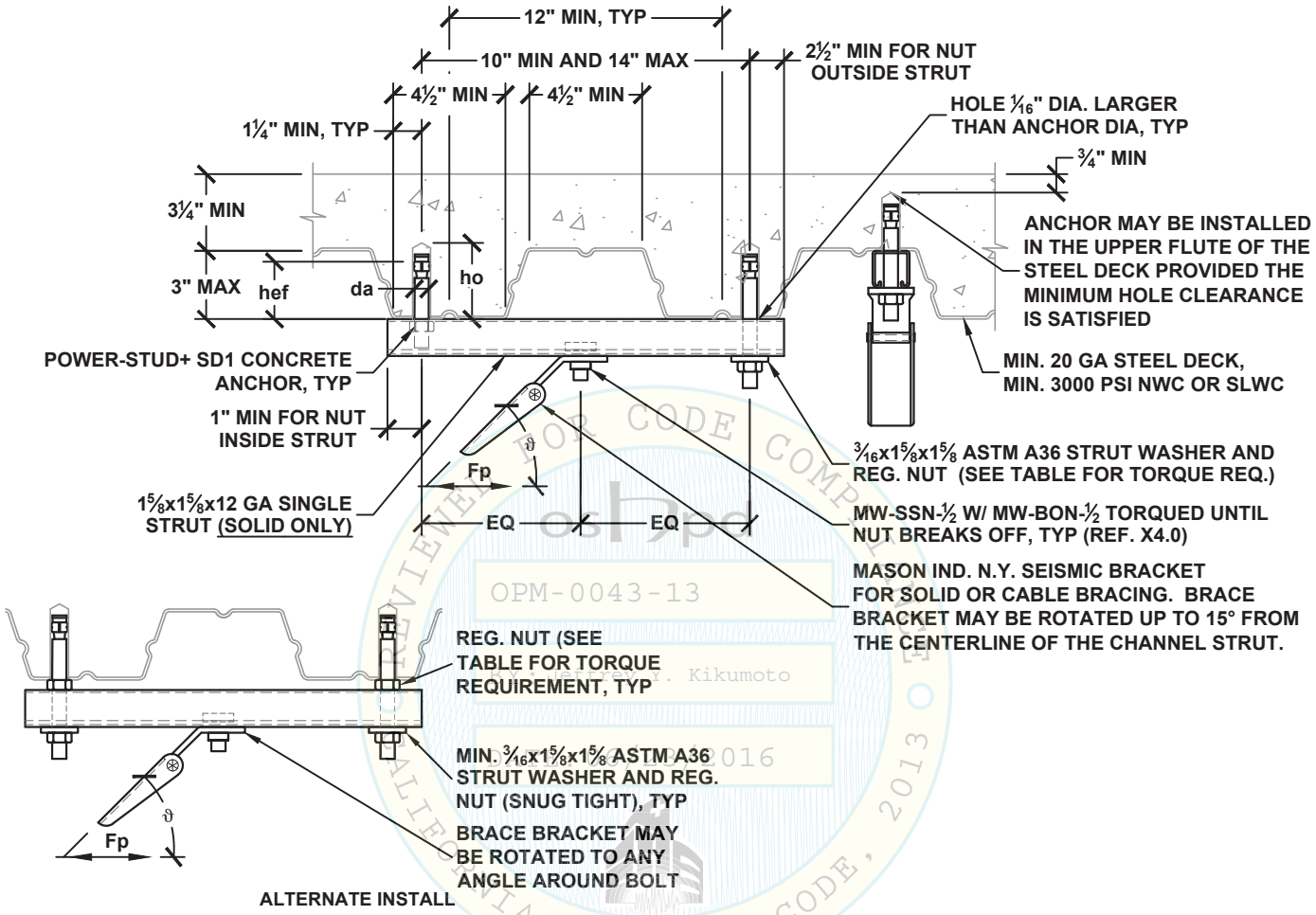

REVIEWED FOR CODE COMPLIANCE
OPM-0043-13
Reviewed By: Jeffrey Kikumoto
2016
CALIFORNIA BUILDING CODE, 2013

BRACE BRACKET ATTACHMENT TYPE	ALLOWABLE LATERAL LOAD Fp LBS	$\Omega_0 = 2.5$ [1] BRACE BRACKET ATTACHMENT TYPE	$\Omega_0 = 2.5$ [1] ALLOWABLE LATERAL LOAD Fp LBS	MAX BRACE RANGE ϑ	POWER-STUD+ SD1 CONCRETE ANCHOR (ICC ESR-2818) SPECIAL INSPECTION REQ'D DIA. da INCH	MIN. EFF. EMBED. hef INCH	MIN. HOLE DEPTH ho INCH	MIN. SPACING Smin INCH	MIN. END DIST. Cmin INCH	TORQUE REQ'D FT-LBS
50A TO 50G	620	50A TO 50F	530	30°- 45°	½	2	2¾	6¾	3⅜	40
50A TO 50F	530	50A TO 50E	370	46°- 60°						

SEE DETAIL N0.00 FOR SECTION NOTES

[1] OVERSTRENGTH FACTOR AS REQUIRED FOR ANCHORAGE TO CONCRETE.

MASON WEST, INC.
1601 E. Miraloma Ave. Placentia, CA 92870
TEL (714) 630 - 0701, www.masonwest.com

Jiefu "Jeff" Zhang, SE
California SE No. S5270

PAGE
N2.31.1

SEISMIC BRACKET ATTACHMENT TO CONCRETE FILLED METAL DECK WITH (2) POWER-STUD+ SD1 CONCRETE ANCHORS

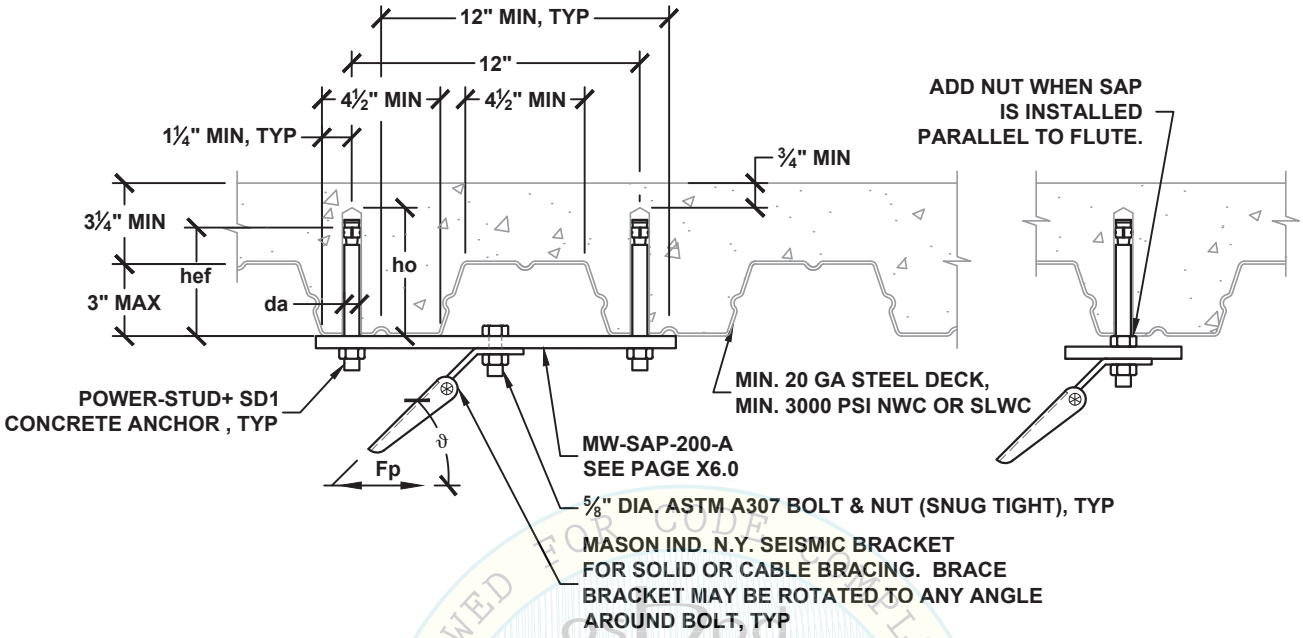

OPM-0043-13
BY: Jeffrey Y. Kikumoto
DATE: 06/23/2016

BRACE BRACKET ATTACHMENT TYPE	ALLOWABLE LATERAL LOAD Fp LBS	$\Omega_0 = 2.5$ [1] BRACE BRACKET ATTACHMENT TYPE	$\Omega_0 = 2.5$ [1] ALLOWABLE LATERAL LOAD Fp LBS	MAX BRACE RANGE ϑ	POWER-STUD+ SD1 CONCRETE ANCHOR (ICC ESR-2818) SPECIAL INSPECTION REQ'D MIN. DIA. da INCH	MIN. EFF. EMBED. hef INCH	MIN. HOLE DEPTH ho INCH	MIN. SPACING Smin INCH	MIN. END DIST. Cmin INCH	TORQUE REQ'D FT-LBS
63A TO 63K	1080	63A TO 63F	560	30°- 45°	⅝	2¾	3¾	8¼	4⅛	80
63A TO 63G	620	63A TO 63E	360	46°- 60°						

SEE DETAIL N0.00 FOR SECTION NOTES

[1] OVERSTRENGTH FACTOR AS REQUIRED FOR ANCHORAGE TO CONCRETE.

MASON WEST, INC.
1601 E. Miraloma Ave. Placentia, CA 92870
TEL (714) 630 - 0701, www.masonwest.com

Jiefu "Jeff" Zhang, SE
California SE No. S5270

PAGE
N2.32

SEISMIC BRACKET ATTACHMENT TO CONCRETE FILLED METAL DECK WITH (4) POWER-STUD+ SD1 CONCRETE ANCHORS

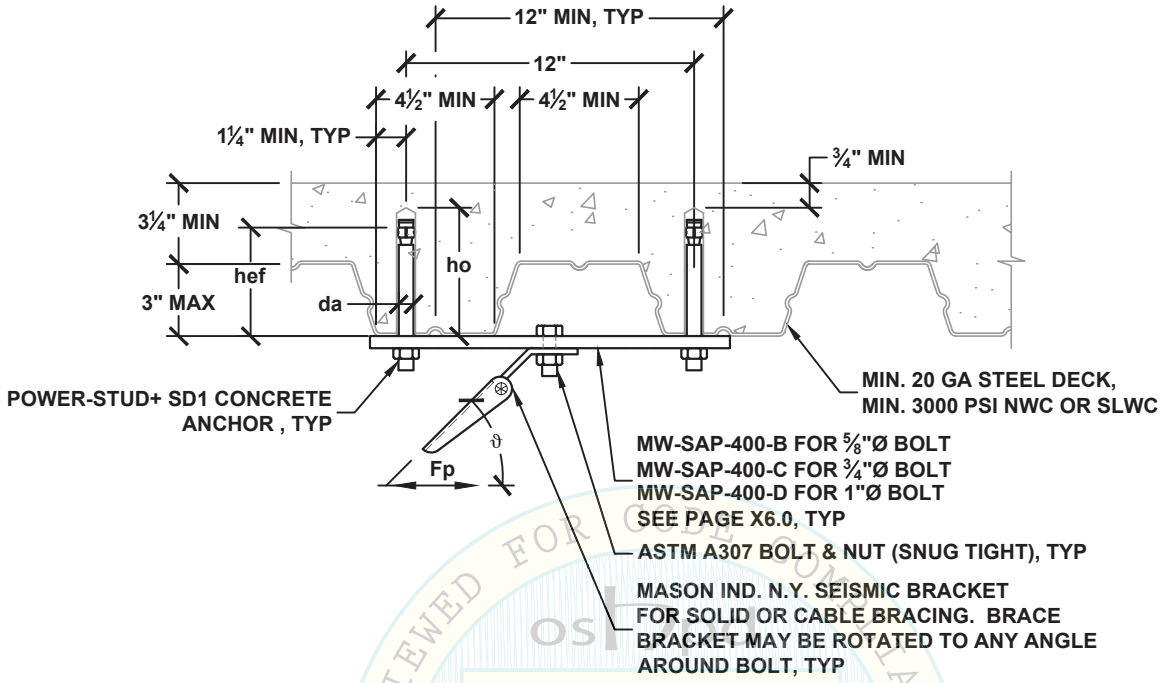

REVIEWED FOR CODE COMPLIANCE
CALIFORNIA BUILDING CODE 2013
OSHPD
OPM-0043-13
BY: Jeffrey Y. Kikumoto
DATE: 06/23/2016

BRACE BRACKET ATTACHMENT TYPE	ALLOWABLE LATERAL LOAD Fp LBS	$\Omega_0 = 2.5$ [1] BRACE BRACKET ATTACHMENT TYPE	ALLOWABLE LATERAL LOAD Fp LBS	MAX BRACE RANGE ϑ	BOLT DIA. INCH	POWER-STUD+ SD1 CONCRETE ANCHOR (ICC ESR-2818) SPECIAL INSPECTION REQ'D DIA. da INCH	MIN. EFF. EMBED. hef INCH	MIN. HOLE DEPTH ho INCH	MIN. SPACING Smin INCH	MIN. END DIST. Cmin INCH	TORQUE REQ'D FT-LBS
63A TO 63N	2320	63A TO 63K	1110	30°- 45°	⅝	⅝	2¾	3¾	8¼	4⅛	80
63A TO 63L	1520	63A TO 63H	730	46°- 60°	⅝						
75A TO 75N	2320	75A TO 75K	1110	30°- 45°	¾						
75A TO 75L	1520	75A TO 75H	730	46°- 60°	¾						
100A TO 100N	2320	100A TO 100K	1110	30°- 45°	1						
100A TO 100L	1520	100A TO 100H	730	46°- 60°	1						

SEE DETAIL N0.00 FOR SECTION NOTES

[1] OVERSTRENGTH FACTOR AS REQUIRED FOR ANCHORAGE TO CONCRETE.

MASON WEST, INC.
1601 E. Miraloma Ave. Placentia, CA 92870
TEL (714) 630 - 0701, www.masonwest.com

Jiefu "Jeff" Zhang, SE
California SE No. S5270

PAGE
N2.33

SEISMIC BRACKET ATTACHMENT TO CONCRETE FILLED METAL DECK WITH (1) POWER-STUD+ SD1 CONCRETE ANCHOR

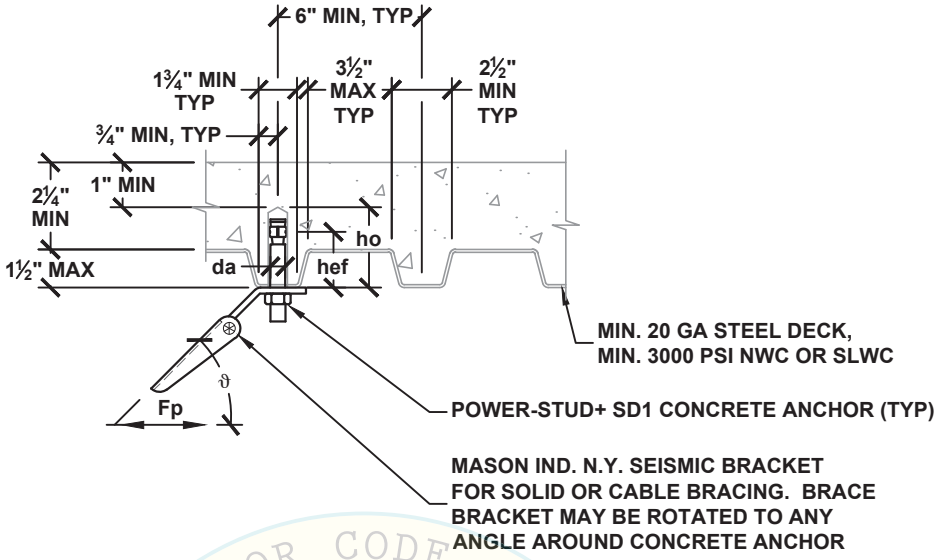

REVIEWED FOR CODE COMPLIANCE
CALIFORNIA BUILDING CODE 2013
oshpd
OPM-0043-13
BY: Jeffrey Y. Kikumoto
DATE: 06/23/2016

BRACE BRACKET ATTACHMENT TYPE	ALLOWABLE LATERAL LOAD Fp LBS	$\Omega_0 = 2.5$ [1] BRACE BRACKET ATTACHMENT TYPE	$\Omega_0 = 2.5$ [1] ALLOWABLE LATERAL LOAD Fp LBS	MAX BRACE RANGE ϑ	POWER-STUD+ SD1 CONCRETE ANCHOR (ICC ESR-2818) SPECIAL INSPECTION REQ'D DIA. da INCH	MIN. EFF. EMBED. hef INCH	MIN. HOLE DEPTH ho INCH	MIN. SPACING Smin INCH	MIN. END DIST. Cmin INCH	TORQUE REQ'D FT-LBS
38A TO 38C	180	38A TO 38B	160	30°- 45°	⅜	2	2⅝	6	3	20
38A TO 38A	110	38A TO 38A	110	46°- 60°						
50A TO 50C	220	50A TO 50C	200	30°- 45°	½	2	2¾	6	3	40
50A TO 50B	130	50A TO 50B	130	46°- 60°						

SEE DETAIL N0.00 FOR SECTION NOTES

[1] OVERSTRENGTH FACTOR AS REQUIRED FOR ANCHORAGE TO CONCRETE.

MASON WEST, INC.
1601 E. Miraloma Ave. Placentia, CA 92870
TEL (714) 630 - 0701, www.masonwest.com

Jiefu "Jeff" Zhang, SE
California SE No. S5270

PAGE
N2.34

SEISMIC BRACKET ATTACHMENT TO CONCRETE FILLED METAL DECK WITH (2) POWER-STUD+ SD1 CONCRETE ANCHORS

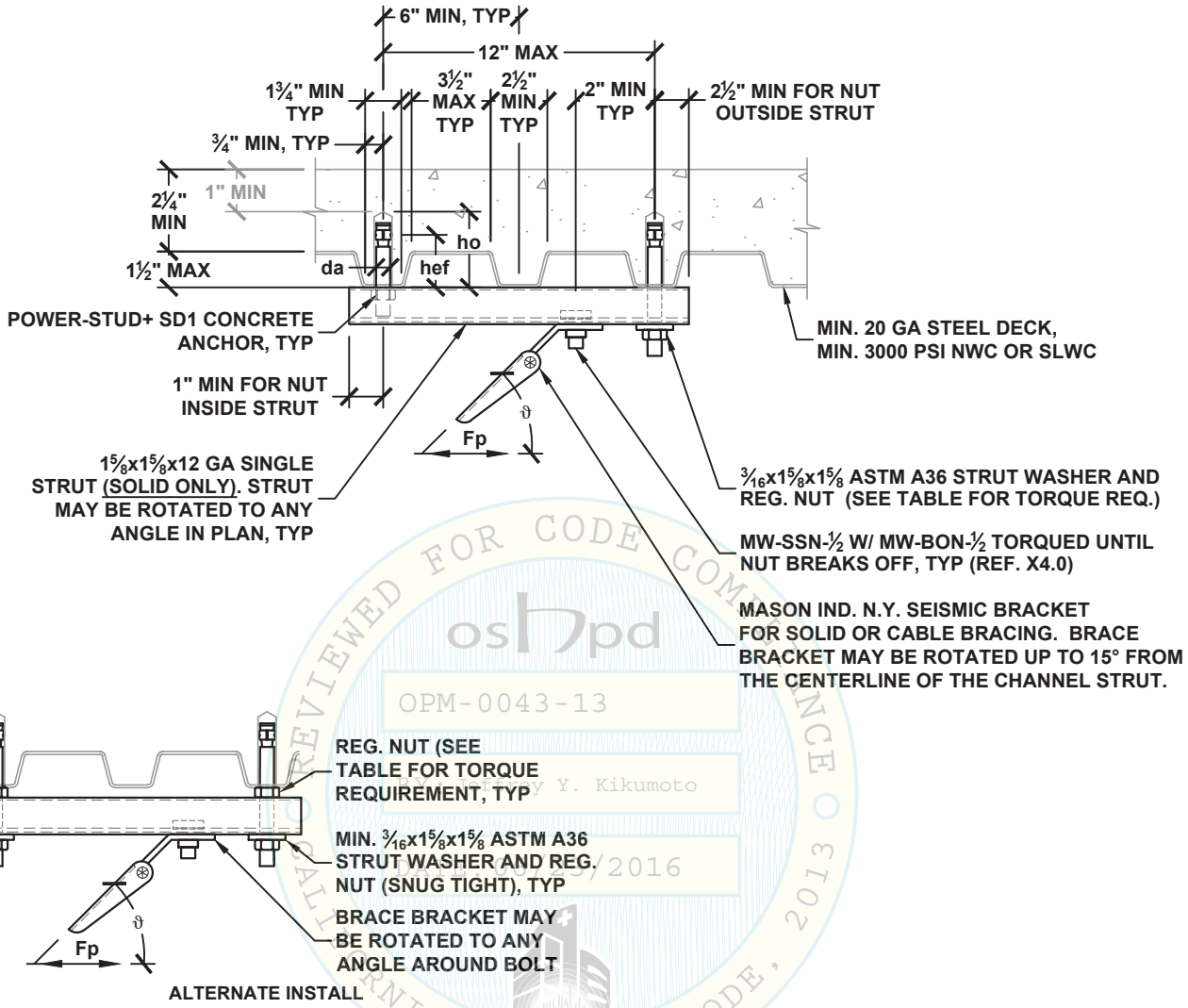

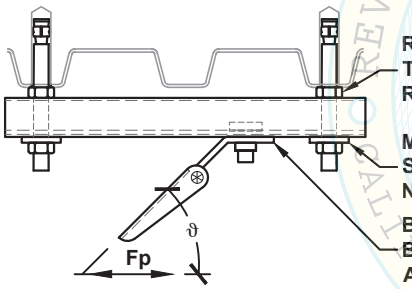

ALTERNATE INSTALL

REVIEWED FOR CODE COMPLIANCE
CALIFORNIA BUILDING CODE, 2013
oshpd
OPM-0043-13
Reviewed by Y. Kikumoto
06/23/2016

BRACE BRACKET ATTACHMENT TYPE	ALLOWABLE LATERAL LOAD Fp LBS	$\Omega_0 = 2.5$ [1] BRACE BRACKET ATTACHMENT TYPE	$\Omega_0 = 2.5$ [1] ALLOWABLE LATERAL LOAD Fp LBS	MAX BRACE RANGE ϑ	POWER-STUD+ SD1 CONCRETE ANCHOR (ICC ESR-2818) SPECIAL INSPECTION REQ'D DIA. da INCH	MIN. EFF. EMBED. hef INCH	MIN. HOLE DEPTH ho INCH	MIN. SPACING Smin INCH	MIN. END DIST. Cmin INCH	TORQUE REQ'D FT-LBS
50A TO 50F	450	50A TO 50C	220	30°- 45°	½	2	2¾	6	3	40
50A TO 50D	300	50A TO 50B	150	46°- 60°						

SEE DETAIL N0.00 FOR SECTION NOTES

[1] OVERSTRENGTH FACTOR AS REQUIRED FOR ANCHORAGE TO CONCRETE.

MASON WEST, INC.
1601 E. Miraloma Ave. Placentia, CA 92870
TEL (714) 630 - 0701, www.masonwest.com

Jiefu "Jeff" Zhang, SE
California SE No. S5270

PAGE
N2.35

SEISMIC BRACKET ATTACHMENT TO CONCRETE FILLED METAL DECK WITH (2) POWER-STUD+ SD1 CONCRETE ANCHORS

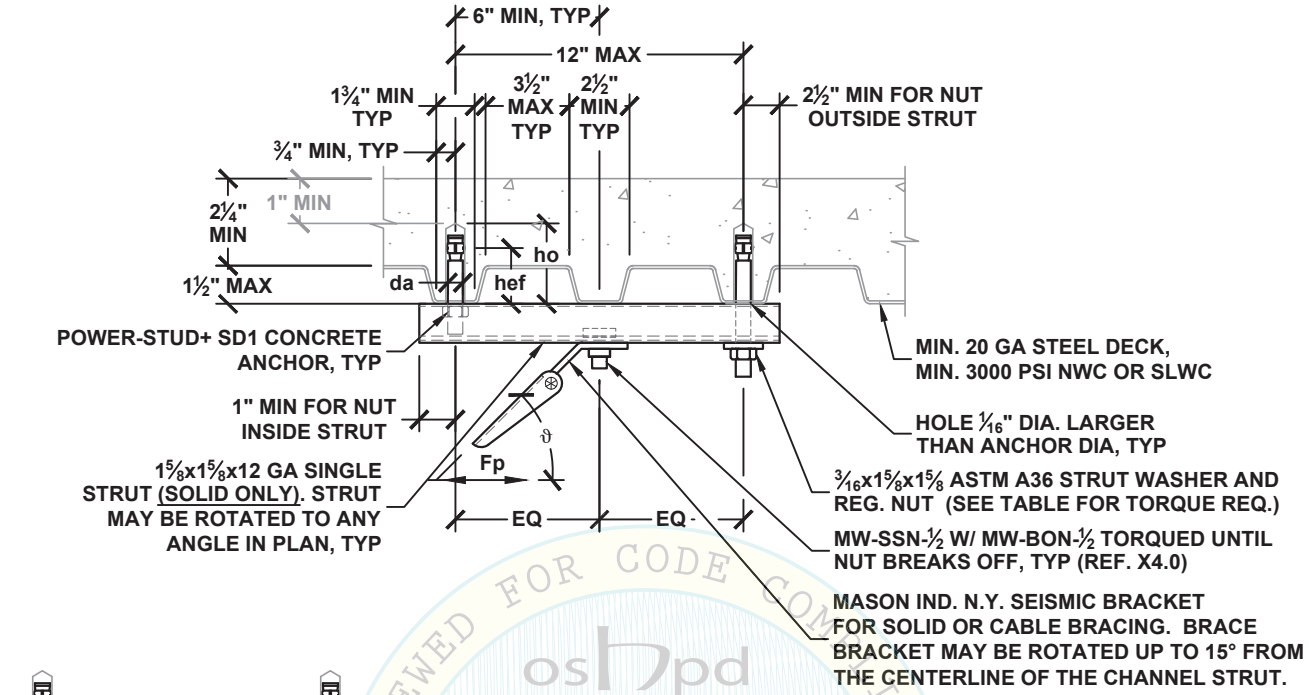

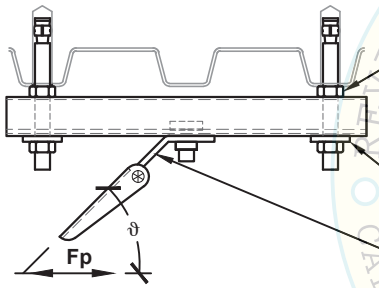

ALTERNATE INSTALL

REVIEWED FOR CODE COMPLIANCE
OSHPD
OPM-0043-13
Reviewed by: Jeffrey Kikumoto
Date: 06/23/2016
CALIFORNIA BUILDING CODE, 2013

BRACE BRACKET ATTACHMENT TYPE	ALLOWABLE LATERAL LOAD Fp LBS	$\Omega_0 = 2.5$ [1] BRACE BRACKET ATTACHMENT TYPE	$\Omega_0 = 2.5$ [1] ALLOWABLE LATERAL LOAD Fp LBS	MAX BRACE RANGE ϑ	POWER-STUD+ SD1 CONCRETE ANCHOR (ICC ESR-2818) SPECIAL INSPECTION REQ'D DIA. da INCH	MIN. EFF. EMBED. hef INCH	MIN. HOLE DEPTH ho INCH	MIN. SPACING Smin INCH	MIN. END DIST. Cmin INCH	TORQUE REQ'D FT-LBS
50A TO 50F	620	50A TO 50E	400	30°- 45°	½	2	2¾	6	3	40
50A TO 50D	530	50A TO 50D	260	46°- 60°						

SEE DETAIL N0.00 FOR SECTION NOTES

[1] OVERSTRENGTH FACTOR AS REQUIRED FOR ANCHORAGE TO CONCRETE.

MASON WEST, INC.
1601 E. Miraloma Ave. Placentia, CA 92870
TEL (714) 630 - 0701, www.masonwest.com

Jiefu "Jeff" Zhang, SE
California SE No. S5270

PAGE
N2.35.1

SEISMIC BRACKET ATTACHMENT TO CONCRETE FILLED METAL DECK WITH (1) MASON IND. N.Y. SAS(E) CONCRETE ANCHOR

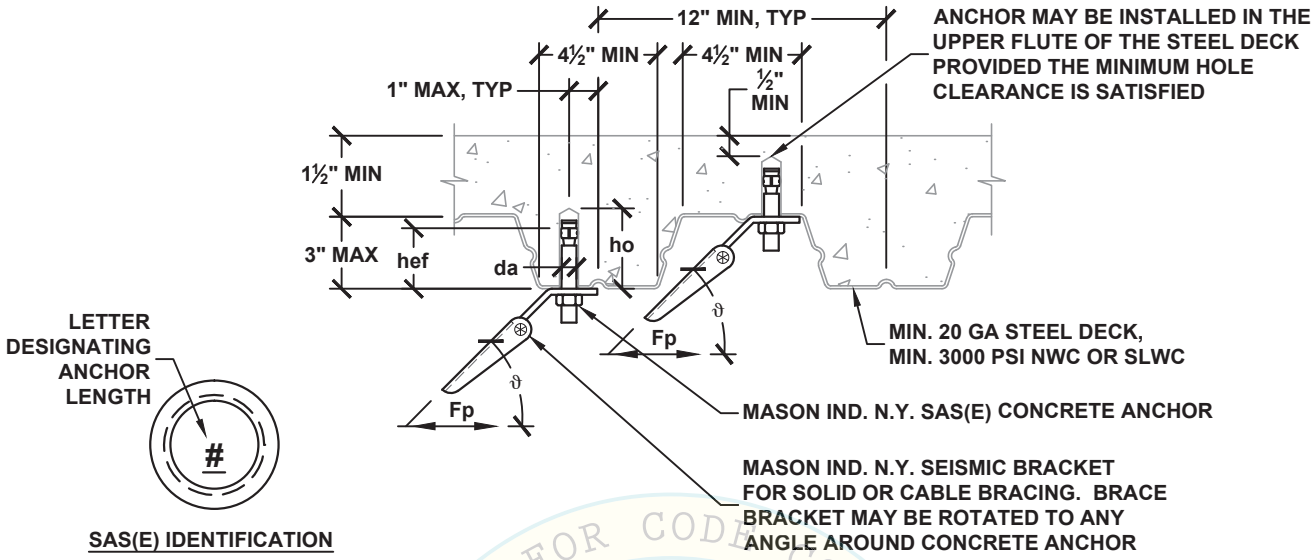

BRACE BRACKET ATTACHMENT TYPE	ALLOWABLE LATERAL LOAD Fp LBS	$\Omega_0 = 2.5$ [1] BRACE BRACKET ATTACHMENT TYPE	ALLOWABLE LATERAL LOAD Fp LBS	MAX BRACE RANGE ϑ	MASON IND. N.Y. SAS(E) CONCRETE ANCHOR (ICC ESR-3037) SPECIAL INSPECTION REQ'D DIA. da INCH	MIN. EFF. EMBED. hef INCH	MIN. HOLE DEPTH ho INCH	MIN. SPACING Smin INCH	MIN. END DIST. Cmin INCH	TORQUE REQ'D FT-LBS
38A TO 38B	160	38A TO 38B	140	30°- 45°	⅜	1⅝	2⅛	6¾	3⅜	30
38A TO 38A	90	38A TO 38A	90	46°- 60°						
38A TO 38E	390	38A TO 38D	330	30°- 45°	⅜	3	3½	9	4½	30
38A TO 38C	230	38A TO 38C	220	46°- 60°						
50A TO 50D	280	50A TO 50C	220	30°- 45°	½	2¼	3	6¾	3⅜	60
50A TO 50B	170	50A TO 50B	160	46°- 60°						
50A TO 50E	420	50A TO 50E	360	30°- 45°	½	4	4¾	12	6	60
50A TO 50C	240	50A TO 50C	240	46°- 60°						
63A TO 63E	350	63A TO 63D	280	30°- 45°	⅝	2¾	3⅝	8¼	4⅛	90
63A TO 63C	210	63A TO 63C	200	46°- 60°						
63A TO 63H	730	63A TO 63G	610	30°- 45°	⅝	5	5⅞	15	7½	90
63A TO 63E	430	63A TO 63E	420	46°- 60°						
75A TO 75E	410	75A TO 75E	350	30°- 45°	¾	3⅜	4⅜	10⅛	5⅛	150
75A TO 75C	240	75A TO 75C	240	46°- 60°						

SEE DETAIL N0.00 FOR SECTION NOTES

[1] OVERSTRENGTH FACTOR AS REQUIRED FOR ANCHORAGE TO CONCRETE.

REVIEWED FOR CODE COMPLIANCE
OSHPD
OPM-0043-13
Reviewed by: Jeffrey Y. Kikumoto
DATE: 06/23/2016
CALIFORNIA BUILDING CODE, 2013

MASON WEST, INC.
1601 E. Miraloma Ave. Placentia, CA 92870
TEL (714) 630 - 0701, www.masonwest.com

Jiefu "Jeff" Zhang, SE
California SE No. S5270

PAGE
N2.40

SEISMIC BRACKET ATTACHMENT TO CONCRETE FILLED METAL DECK WITH (2) MASON IND. N.Y. SAS(E) CONCRETE ANCHORS

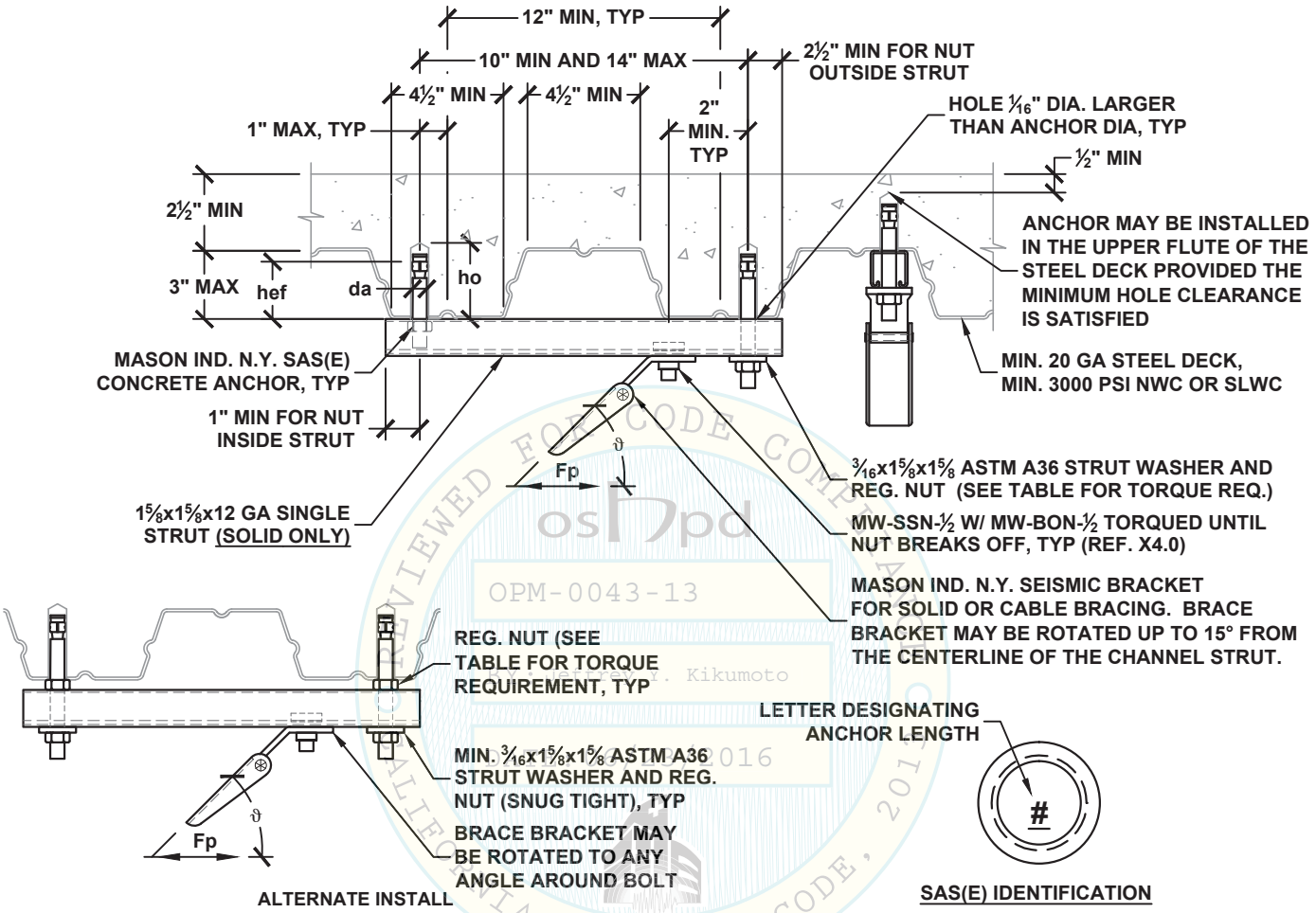

BRACE BRACKET ATTACHMENT TYPE	ALLOWABLE LATERAL LOAD Fp LBS	$\Omega_0 = 2.5$ [1] BRACE BRACKET ATTACHMENT TYPE	$\Omega_0 = 2.5$ [1] ALLOWABLE LATERAL LOAD Fp LBS	MAX BRACE RANGE ϑ	MASON IND. N.Y. SAS(E) 2 CONCRETE ANCHOR (ICC ESR-3037) SPECIAL INSPECTION REQ'D DIA. da INCH	MIN. EFF. EMBED. hef INCH	MIN. HOLE DEPTH ho INCH	MIN. SPACING Smin INCH	MIN. END DIST. Cmin INCH	TORQUE REQ'D FT-LBS
50A TO 50H	620	50A TO 50E	390	30°- 45°	½	4	4¾	12	6	60
50A TO 50F	530	50A TO 50D	270	46°- 60°						

SEE DETAIL N0.00 FOR SECTION NOTES

[1] OVERSTRENGTH FACTOR AS REQUIRED FOR ANCHORAGE TO CONCRETE.

MASON WEST, INC.
1601 E. Miraloma Ave. Placentia, CA 92870
TEL (714) 630 - 0701, www.masonwest.com

Jiefu "Jeff" Zhang, SE
California SE No. S5270

PAGE
N2.41

REVIEWED FOR CODE COMPLIANCE
OSHPD
OPM-0043-13
Reviewed by: J. Kikumoto
2016 CALIFORNIA BUILDING CODE

SEISMIC BRACKET ATTACHMENT TO CONCRETE FILLED METAL DECK WITH (2) MASON IND. N.Y. SAS(E) CONCRETE ANCHORS

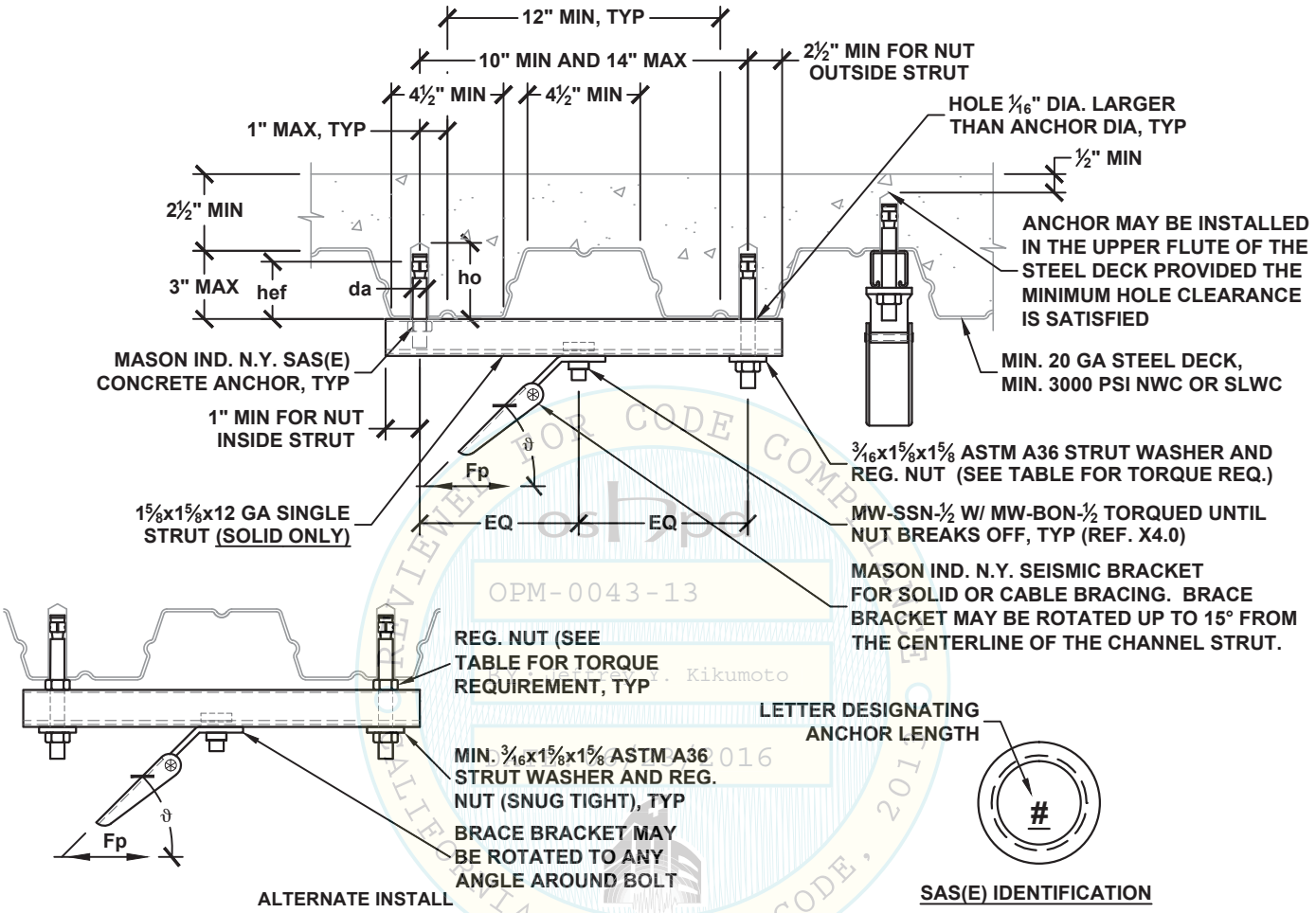

BRACE BRACKET ATTACHMENT TYPE	ALLOWABLE LATERAL LOAD Fp LBS	$\Omega_0 = 2.5$ [1] BRACE BRACKET ATTACHMENT TYPE	$\Omega_0 = 2.5$ [1] ALLOWABLE LATERAL LOAD Fp LBS	MAX BRACE RANGE ϑ	MASON IND. N.Y. SAS(E) 2 CONCRETE ANCHOR (ICC ESR-3037) SPECIAL INSPECTION REQ'D DIA. da INCH	MIN. EFF. EMBED. hef INCH	MIN. HOLE DEPTH ho INCH	MIN. SPACING Smin INCH	MIN. END DIST. Cmin INCH	TORQUE REQ'D FT-LBS
50A TO 50H	620	50A TO 50G	620	30°- 45°	½	4	4¾	12	6	60
50A TO 50F	530	50A TO 50F	480	46°- 60°						

SEE DETAIL N0.00 FOR SECTION NOTES

[1] OVERSTRENGTH FACTOR AS REQUIRED FOR ANCHORAGE TO CONCRETE.

MASON WEST, INC.
1601 E. Miraloma Ave. Placentia, CA 92870
TEL (714) 630 - 0701, www.masonwest.com

Jiefu "Jeff" Zhang, SE
California SE No. S5270

PAGE
N2.41.1

OPM-0043-13 Reviewed for Code Compliance by Jeffrey Kikumoto 06/23/2016 CALIFORNIA BUILDING CODE, 2016

SEISMIC BRACKET ATTACHMENT TO CONCRETE FILLED METAL DECK WITH (2) MASON IND. N.Y. SAS(E) CONCRETE ANCHORS

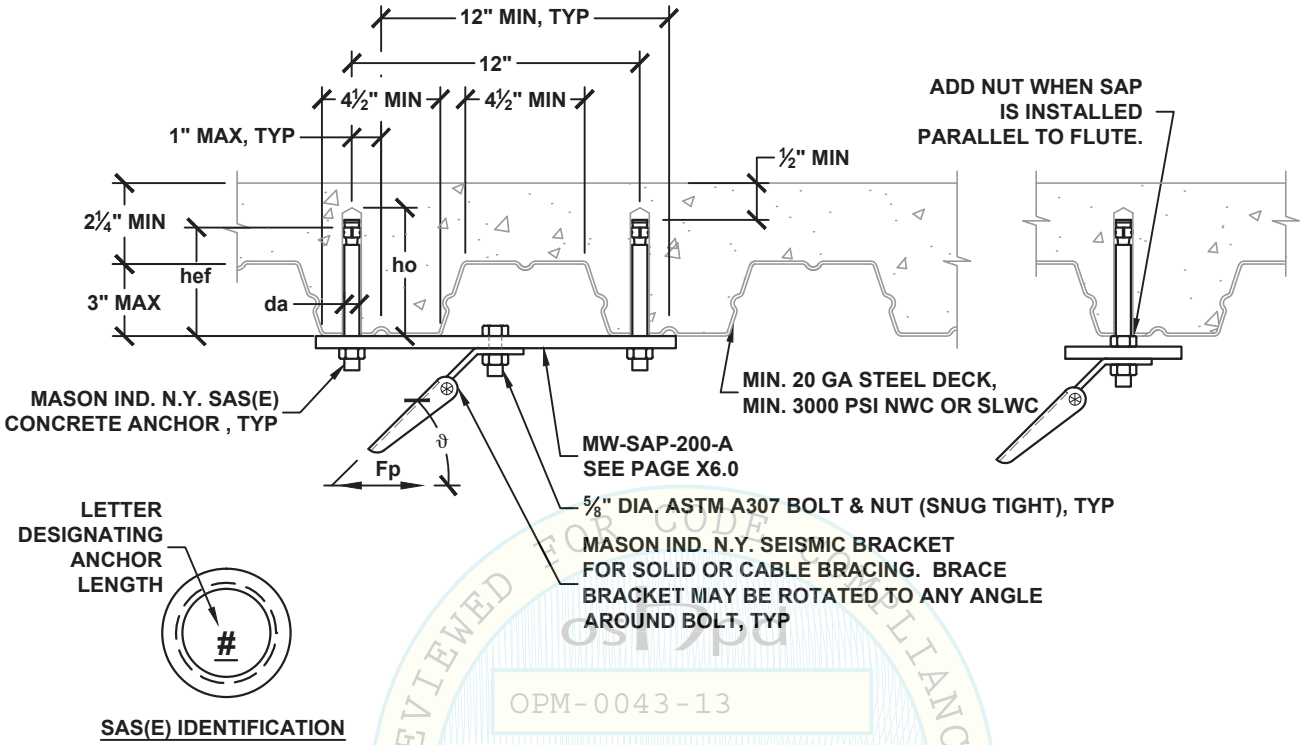

SAS(E) IDENTIFICATION

REVIEWED FOR CODE COMPLIANCE
CALIFORNIA BUILDING CODE 2013
OSHPD
OPM-0043-13
BY: Jeffrey Y. Kikumoto
DATE: 06/23/2016

BRACE BRACKET ATTACHMENT TYPE	ALLOWABLE LATERAL LOAD Fp LBS	$\Omega_0 = 2.5$ [1] BRACE BRACKET ATTACHMENT TYPE	$\Omega_0 = 2.5$ [1] ALLOWABLE LATERAL LOAD Fp LBS	MAX BRACE RANGE ϑ	MASON IND. N.Y. SAS(E) CONCRETE ANCHOR (ICC ESR-3037) SPECIAL INSPECTION REQ'D DIA. da INCH	MIN. EFF. EMBED. hef INCH	MIN. HOLE DEPTH ho INCH	MIN. SPACING Smin INCH	MIN. END DIST. Cmin INCH	TORQUE REQ'D FT-LBS
63A TO 63K	1080	63A TO 63K	1080	30°- 45°	⅝	2¾	3⅝	8¼	4⅛	90
63A TO 63G	620	63A TO 63G	620	46°- 60°						

SEE DETAIL N0.00 FOR SECTION NOTES

[1] OVERSTRENGTH FACTOR AS REQUIRED FOR ANCHORAGE TO CONCRETE.

MASON WEST, INC.
1601 E. Miraloma Ave. Placentia, CA 92870
TEL (714) 630 - 0701, www.masonwest.com

Jiefu "Jeff" Zhang, SE
California SE No. S5270

PAGE
N2.42

SEISMIC BRACKET ATTACHMENT TO CONCRETE FILLED METAL DECK WITH (4) MASON IND. N.Y. SAS(E) CONCRETE ANCHORS

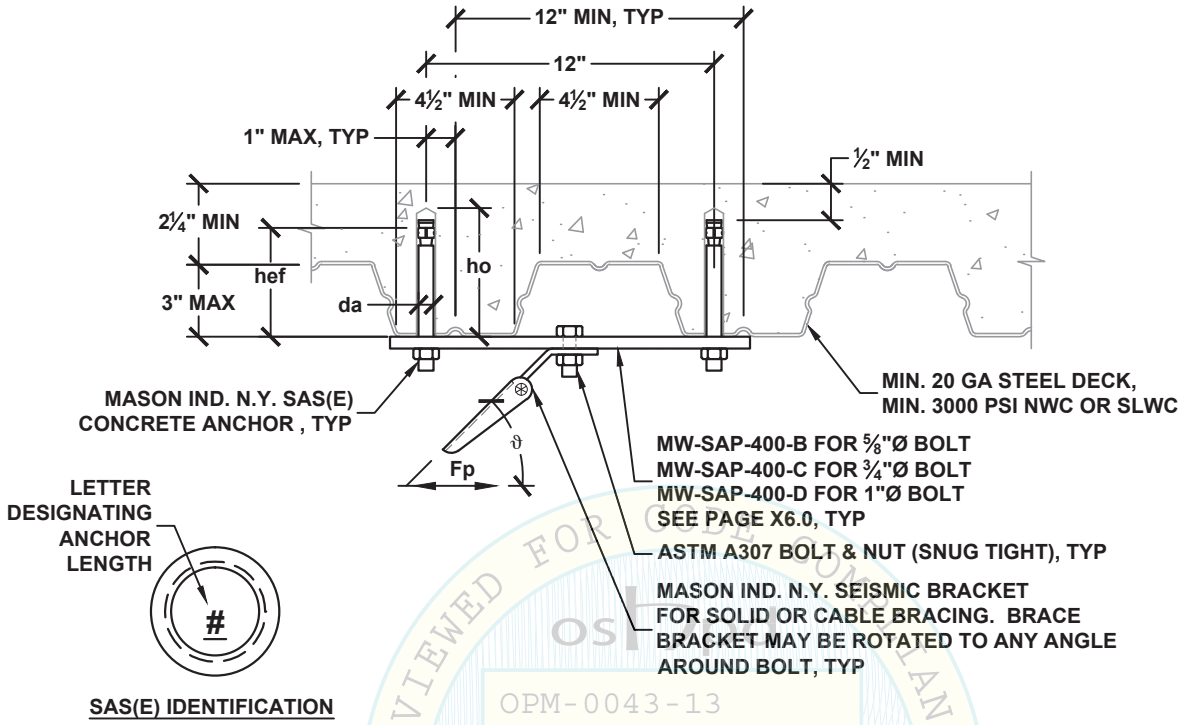

SAS(E) IDENTIFICATION

REVIEWED FOR CODE COMPLIANCE
CALIFORNIA BUILDING CODE 2013
OSHPD
OPM-0043-13
BY: Jeffrey Y. Kikumoto
DATE: 06/23/2016

BRACE BRACKET ATTACHMENT TYPE	ALLOWABLE LATERAL LOAD Fp LBS	$\Omega_0 = 2.5$ [1] BRACE BRACKET ATTACHMENT TYPE	ALLOWABLE LATERAL LOAD Fp LBS	MAX BRACE RANGE ϑ	BOLT DIA. INCH	MASON IND. N.Y. SAS(E) CONCRETE ANCHOR (ICC ESR-3037) SPECIAL INSPECTION REQ'D DIA. da INCH	MIN. EFF. EMBED. hef INCH	MIN. HOLE DEPTH ho INCH	MIN. SPACING Smin INCH	MIN. END DIST. Cmin INCH	TORQUE REQ'D FT-LBS
63A TO 63N	2350	63A TO 63K	1130	30°- 45°	⅝	⅝	2¾	3⅝	8¼	4⅛	90
63A TO 63M	1680	63A TO 63H	800	46°- 60°	⅝						
75A TO 75N	2350	75A TO 75K	1130	30°- 45°	¾						
75A TO 75M	1680	75A TO 75H	800	46°- 60°	¾						
100A TO 100N	2350	100A TO 100K	1130	30°- 45°	1						
100A TO 100M	1680	100A TO 100H	800	46°- 60°	1						

SEE DETAIL N0.00 FOR SECTION NOTES

[1] OVERSTRENGTH FACTOR AS REQUIRED FOR ANCHORAGE TO CONCRETE.

MASON WEST, INC.
1601 E. Miraloma Ave. Placentia, CA 92870
TEL (714) 630 - 0701, www.masonwest.com

Jiefu "Jeff" Zhang, SE
California SE No. S5270

PAGE
N2.43

SEISMIC BRACKET ATTACHMENT TO CONCRETE FILLED METAL DECK WITH (1) POWER-STUD+ SD2 CONCRETE ANCHOR

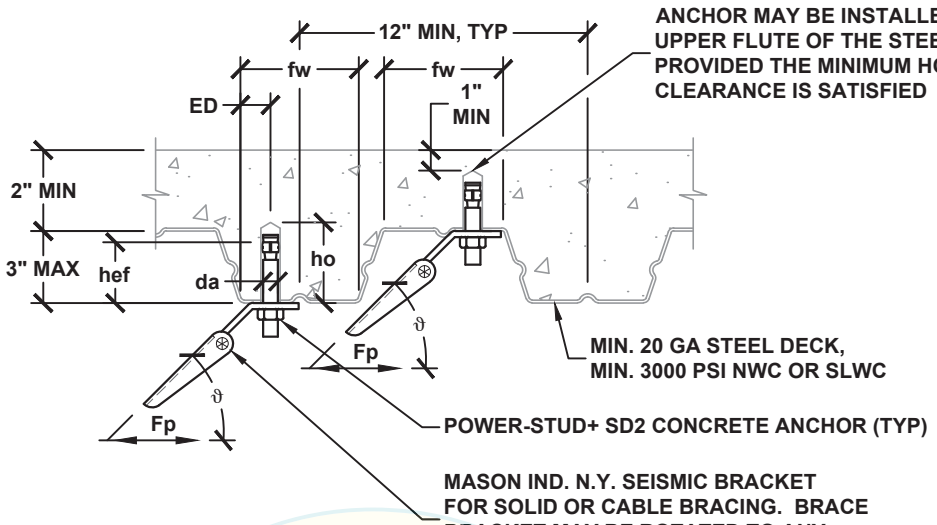

MIN FLUTE WIDTH fw INCH	MIN EDGE DIST ED INCH
3⅞	1
4½	1¼

REVIEWED FOR CODE COMPLIANCE
OSHPD
OPM-0043-13
BY: Jeffrey Y. Kikumoto
06/23/2016
CALIFORNIA BUILDING CODE, 2013

BRACE BRACKET ATTACHMENT TYPE	ALLOWABLE LATERAL LOAD Fp LBS	$\Omega_0 = 2.5$ [1] BRACE BRACKET ATTACHMENT TYPE	ALLOWABLE LATERAL LOAD Fp LBS	MAX BRACE RANGE ϑ	POWER-STUD+ SD2 CONCRETE ANCHOR (ICC ESR-2502) SPECIAL INSPECTION REQ'D DIA. da INCH	MIN. EFF. EMBED. hef INCH	MIN. HOLE DEPTH ho INCH	MIN. SPACING Smin INCH	MIN. END DIST. Cmin INCH	TORQUE REQ'D FT-LBS
38A TO 38C	210	38A TO 38B	170	30°- 45°	⅜	2	2⅝	MAX OF: 3*hef OR 1.5*FLUTE WIDTH	3⅜	20
38A TO 38A	120	38A TO 38A	120	46°- 60°						
50A TO 50C	230	50A TO 50C	200	30°- 45°	½	2	2¾		3⅜	40
50A TO 50B	130	50A TO 50B	130	46°- 60°						
50A TO 50E	410	50A TO 50E	360	30°- 45°	½	3¼	4		4⅞	40
50A TO 50C	230	50A TO 50C	240	46°- 60°						
FOR fw ≥ 4½"										
63A TO 63E	430	63A TO 63D	340	30°- 45°	⅝	3¼	2⅝	MAX OF: 3*hef OR 1.5*FLUTE WIDTH	3⅜	60
63A TO 63D	270	63A TO 63C	240	46°- 60°						
63A TO 63G	690	63A TO 63F	550	30°- 45°	⅝	4¼	2¾		3⅜	60
63A TO 63E	420	63A TO 63E	390	46°- 60°						
75A TO 75F	450	75A TO 75E	350	30°- 45°	¾	3¾	4		4⅞	110
75A TO 75D	280	75A TO 75D	260	46°- 60°						

SEE DETAIL N0.00 FOR SECTION NOTES

[1] OVERSTRENGTH FACTOR AS REQUIRED FOR ANCHORAGE TO CONCRETE.

MASON WEST, INC.
1601 E. Miraloma Ave. Placentia, CA 92870
TEL (714) 630 - 0701, www.masonwest.com

Jiefu "Jeff" Zhang, SE
California SE No. S5270

PAGE
N2.60

SEISMIC BRACKET ATTACHMENT TO CONCRETE FILLED METAL DECK WITH (2) POWER-STUD+ SD2 CONCRETE ANCHORS

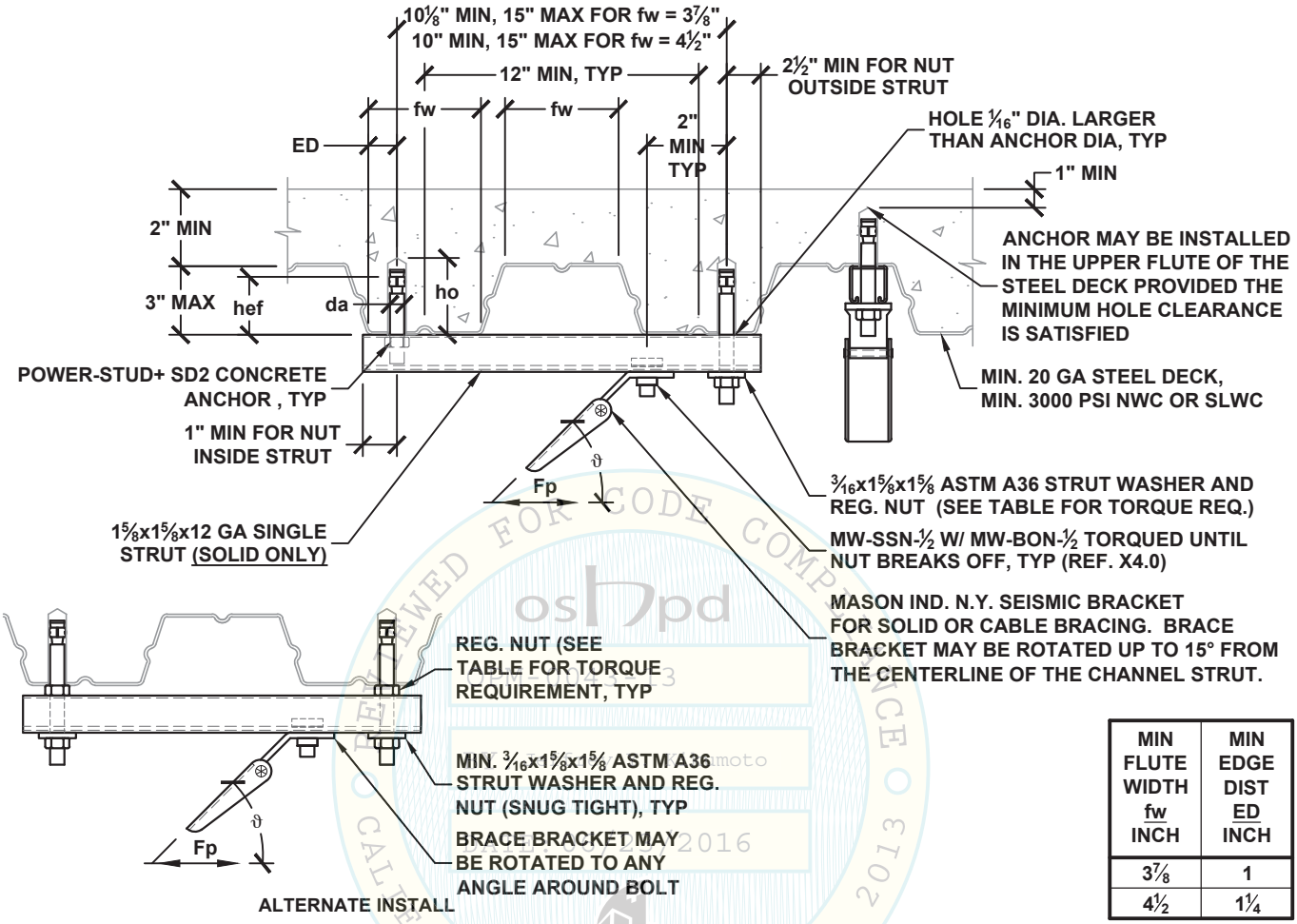

MIN FLUTE WIDTH fw INCH	MIN EDGE DIST ED INCH
3⅞	1
4½	1¼

BRACE BRACKET ATTACHMENT TYPE	ALLOWABLE LATERAL LOAD Fp LBS	$\Omega_0 = 2.5$[1] BRACE BRACKET ATTACHMENT TYPE	ALLOWABLE LATERAL LOAD Fp LBS	MAX BRACE RANGE ϑ	POWER-STUD+ SD2 CONCRETE ANCHOR (ICC ESR-2502) SPECIAL INSPECTION REQ'D DIA. da INCH	MIN. EFF. EMBED. hef INCH	MIN. HOLE DEPTH ho INCH	MIN. SPACING Smin INCH	MIN. END DIST. Cmin INCH	TORQUE REQ'D FT-LBS
50A TO 50E	410	50A TO 50C	200	30°- 45°	⅜	2	2⅝	MAX OF: 3*hef OR 1.5*FLUTE WIDTH	3⅜	20
50A TO 50D	280	50A TO 50B	140	46°- 60°						
50A TO 50G	620	50A TO 50E	380	30°- 45°	½	3¼	4		4⅞	40
50A TO 50F	530	50A TO 50D	260	46°- 60°						

SEE DETAIL N0.00 FOR SECTION NOTES

[1] OVERSTRENGTH FACTOR AS REQUIRED FOR ANCHORAGE TO CONCRETE.

MASON WEST, INC.
1601 E. Miraloma Ave. Placentia, CA 92870
TEL (714) 630 - 0701, www.masonwest.com

Jiefu "Jeff" Zhang, SE
California SE No. S5270

PAGE
N2.61

REVIEWED FOR CODE COMPLIANCE
CALIFORNIA BUILDING CODE, 2013
OPM-0043-13 Reviewed for Code Compliance by Jeffrey Kikumoto 06/23/2016

SEISMIC BRACKET ATTACHMENT TO CONCRETE FILLED METAL DECK WITH (2) POWER-STUD+ SD2 CONCRETE ANCHORS

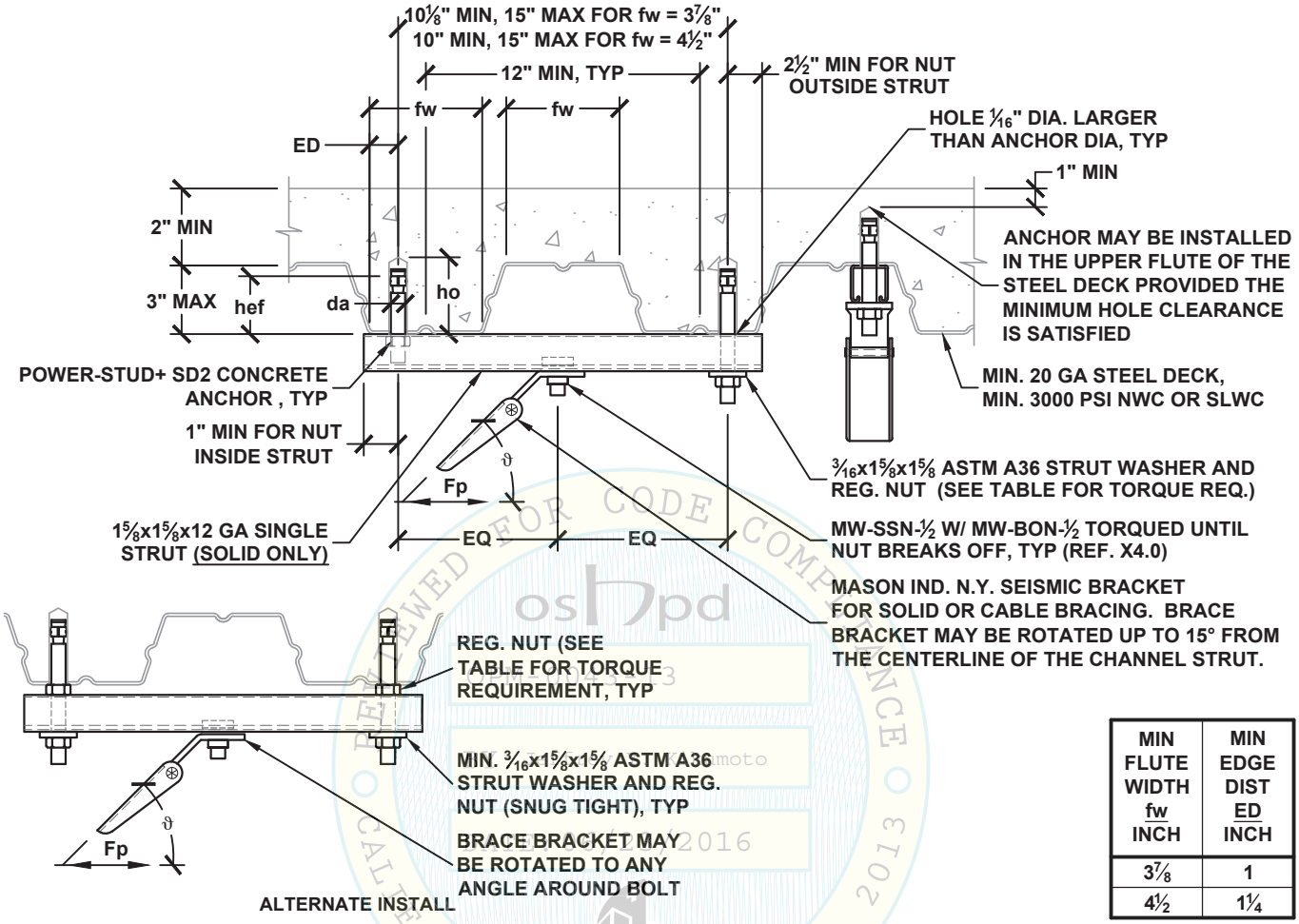

MIN FLUTE WIDTH fw INCH	MIN EDGE DIST ED INCH
3⅞	1
4½	1¼

BRACE BRACKET ATTACHMENT TYPE	ALLOWABLE LATERAL LOAD Fp LBS	$\Omega_0 = 2.5$[1] BRACE BRACKET ATTACHMENT TYPE	ALLOWABLE LATERAL LOAD Fp LBS	MAX BRACE RANGE ϑ	POWER-STUD+ SD2 CONCRETE ANCHOR (ICC ESR-2502) SPECIAL INSPECTION REQ'D DIA. da INCH	MIN. EFF. EMBED. hef INCH	MIN. HOLE DEPTH ho INCH	MIN. SPACING Smin INCH	MIN. END DIST. Cmin INCH	TORQUE REQ'D FT-LBS
50A TO 50G	620	50A TO 50E	350	30°- 45°	⅜	2	2⅝	MAX OF: 3*hef OR 1.5*FLUTE WIDTH	3⅜	20
50A TO 50F	500	50A TO 50C	240	46°- 60°						
50A TO 50G	620	50A TO 50G	620	30°- 45°	½	3¼	4		4⅞	40
50A TO 50F	530	50A TO 50F	480	46°- 60°						

SEE DETAIL N0.00 FOR SECTION NOTES

[1] OVERSTRENGTH FACTOR AS REQUIRED FOR ANCHORAGE TO CONCRETE.

MASON WEST, INC.
1601 E. Miraloma Ave. Placentia, CA 92870
TEL (714) 630 - 0701, www.masonwest.com

Jiefu "Jeff" Zhang, SE
California SE No. S5270

PAGE
N2.61.1

REVIEWED FOR CODE COMPLIANCE CALIFORNIA BUILDING CODE, 2013
OSHPD
OPM-0043-13 Reviewed for Code Compliance by Jeffrey Kikumoto 06/23/2016

SEISMIC BRACKET ATTACHMENT TO CONCRETE FILLED METAL DECK WITH (2) POWER-STUD+ SD2 CONCRETE ANCHORS

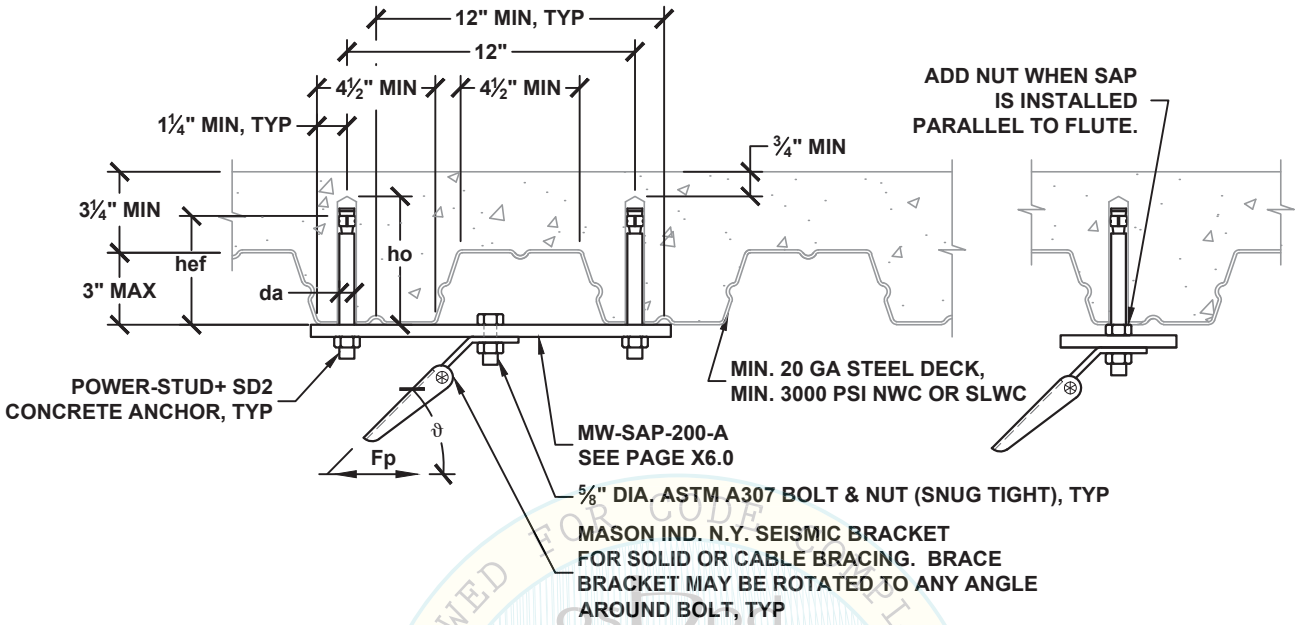

OPM-0043-13
BY: Jeffrey Y. Kikumoto
DATE: 06/23/2016

BRACE BRACKET ATTACHMENT TYPE	ALLOWABLE LATERAL LOAD Fp LBS	$\Omega_0 = 2.5$ [1] BRACE BRACKET ATTACHMENT TYPE	$\Omega_0 = 2.5$ [1] ALLOWABLE LATERAL LOAD Fp LBS	MAX BRACE RANGE ϑ	POWER-STUD+ SD2 CONCRETE ANCHOR (ICC ESR-2502) SPECIAL INSPECTION REQ'D MIN. DIA. da INCH	MIN. EFF. EMBED. hef INCH	MIN. HOLE DEPTH ho INCH	MIN. SPACING Smin INCH	MIN. END DIST. Cmin INCH	TORQUE REQ'D FT-LBS
63A TO 63K	1080	63A TO 63K	1080	30°- 45°	⅝	4¼	5¼	MAX OF: 3*hef OR 1.5*FLUTE WIDTH	6⅜	60
63A TO 63G	620	63A TO 63G	620	46°- 60°						

SEE DETAIL N0.00 FOR SECTION NOTES

[1] OVERSTRENGTH FACTOR AS REQUIRED FOR ANCHORAGE TO CONCRETE.

MASON WEST, INC.
1601 E. Miraloma Ave. Placentia, CA 92870
TEL (714) 630 - 0701, www.masonwest.com

Jiefu "Jeff" Zhang, SE
California SE No. S5270

PAGE
N2.62

SEISMIC BRACKET ATTACHMENT TO CONCRETE FILLED METAL DECK WITH (4) POWER-STUD+ SD2 CONCRETE ANCHORS

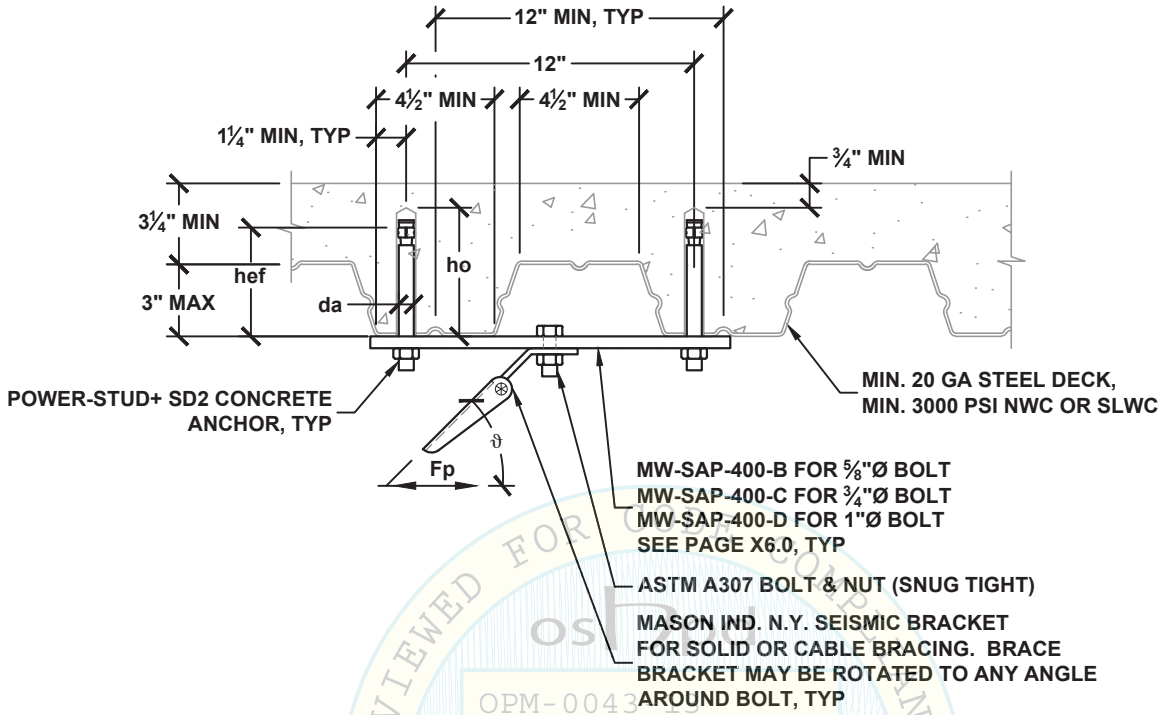

REVIEWED FOR CODE COMPLIANCE
CALIFORNIA BUILDING CODE 2013
OSHPD
OPM-0043-13
BY: Jeffrey Y. Kikumoto
DATE: 06/23/2016

BRACE BRACKET ATTACHMENT TYPE	ALLOWABLE LATERAL LOAD Fp LBS	$\Omega_0 = 2.5$ [1] BRACE BRACKET ATTACHMENT TYPE	ALLOWABLE LATERAL LOAD Fp LBS	MAX BRACE RANGE ϑ	BOLT DIA. INCH	POWER-STUD+ SD2 CONCRETE ANCHOR (ICC ESR-2502) SPECIAL INSPECTION REQ'D					
						DIA. da INCH	MIN. EFF. EMBED. hef INCH	MIN. HOLE DEPTH ho INCH	MIN. SPACING Smin INCH	MIN. END DIST. Cmin INCH	TORQUE REQ'D FT-LBS
63A TO 63P	3080	63A TO 63N	2180	30°- 45°	⅝	⅝	4¼	5¼	MAX OF: 3*hef OR 1.5*FLUTE WIDTH	6⅜	60
63A TO 63N	2080	63A TO 63L	1570	46°- 60°	⅝						
75A TO 75Q	3500	75A TO 75N	2180	30°- 45°	¾						
75A TO 75N	2020	75A TO 75L	1570	46°- 60°	¾						
100A TO 100Q	3500	100A TO 100N	2180	30°- 45°	1						
100A TO 100Q	2020	100A TO 100L	1570	46°- 60°	1						

SEE DETAIL N0.00 FOR SECTION NOTES
[1] OVERSTRENGTH FACTOR AS REQUIRED FOR ANCHORAGE TO CONCRETE.

MASON WEST, INC.
1601 E. Miraloma Ave. Placentia, CA 92870
TEL (714) 630 - 0701, www.masonwest.com

Jiefu "Jeff" Zhang, SE
California SE No. S5270

PAGE
N2.63

SEISMIC BRACKET ATTACHMENT TO CONCRETE FILLED METAL DECK WITH (1) POWER-STUD+ SD2 CONCRETE ANCHOR

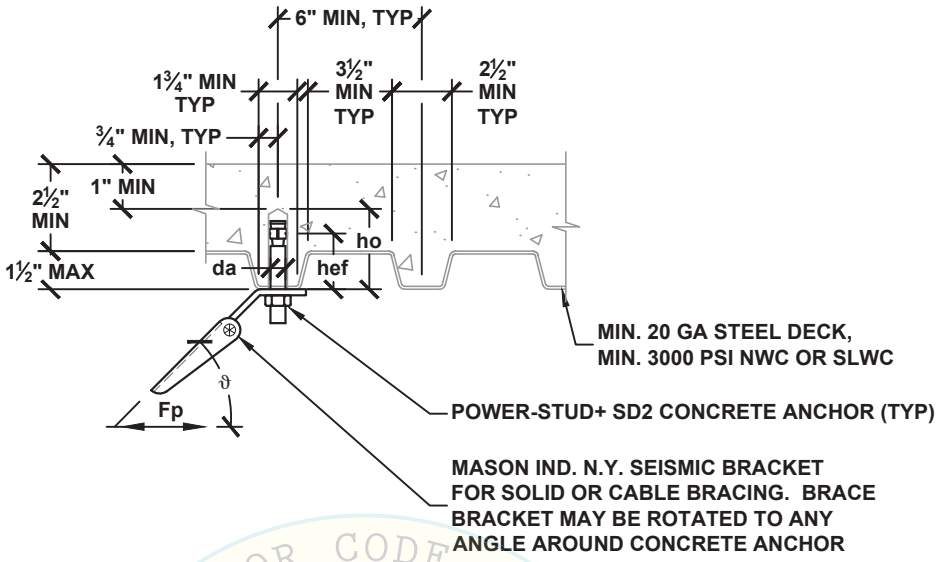

REVIEWED FOR CODE COMPLIANCE
CALIFORNIA BUILDING CODE 2013
oshpd
OPM-0043-13
BY: Jeffrey Y. Kikumoto
DATE: 06/23/2016

BRACE BRACKET ATTACHMENT TYPE	ALLOWABLE LATERAL LOAD Fp LBS	$\Omega_0 = 2.5$ [1] BRACE BRACKET ATTACHMENT TYPE	$\Omega_0 = 2.5$ [1] ALLOWABLE LATERAL LOAD Fp LBS	MAX BRACE RANGE ϑ	POWER-STUD+ SD2 CONCRETE ANCHOR (ICC ESR-2502) SPECIAL INSPECTION REQ'D DIA. da INCH	MIN. EFF. EMBED. hef INCH	MIN. HOLE DEPTH ho INCH	MIN. SPACING Smin INCH	MIN. END DIST. Cmin INCH	TORQUE REQ'D FT-LBS
38A TO 38C	190	38A TO 38B	160	30°- 45°	⅜	2	2⅝	6	3	20
38A TO 38A	110	38A TO 38A	110	46°- 60°						
50A TO 50C	230	50A TO 50C	210	30°- 45°	½	2	2¾	6	3	40
50A TO 50B	130	50A TO 50B	130	46°- 60°						

SEE DETAIL N0.00 FOR SECTION NOTES

[1] OVERSTRENGTH FACTOR AS REQUIRED FOR ANCHORAGE TO CONCRETE.

MASON WEST, INC.
1601 E. Miraloma Ave. Placentia, CA 92870
TEL (714) 630 - 0701, www.masonwest.com

Jiefu "Jeff" Zhang, SE
California SE No. S5270

PAGE
N2.64

SEISMIC BRACKET ATTACHMENT TO CONCRETE FILLED METAL DECK WITH (2) POWER-STUD+ SD2 CONCRETE ANCHORS

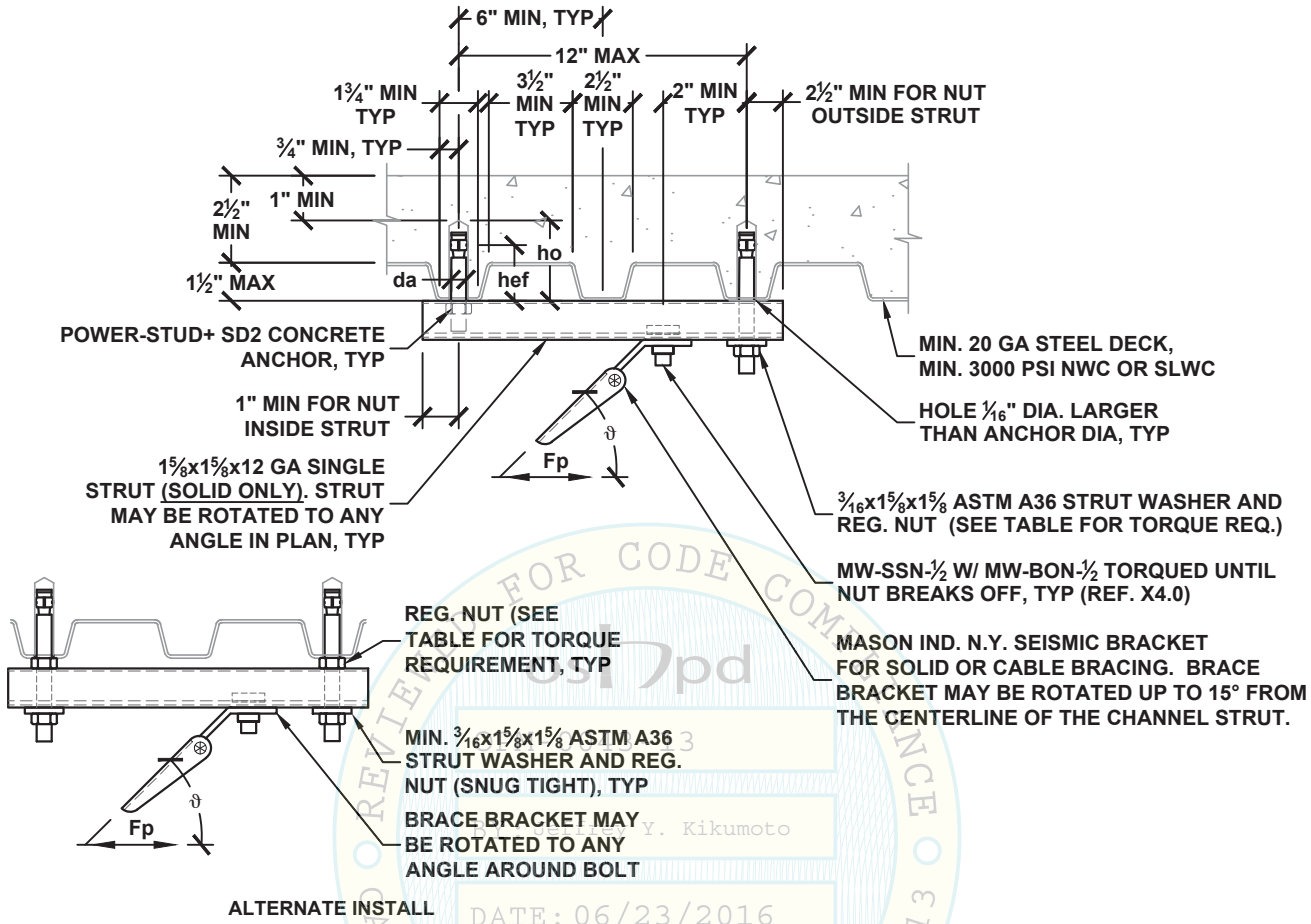

OSHPD
PREVIEWED FOR CODE COMPLIANCE
CALIFORNIA BUILDING CODE 2013
OPM-0043-13
Reviewed By: Y. Kikumoto
DATE: 06/23/2016

BRACE BRACKET ATTACHMENT TYPE	ALLOWABLE LATERAL LOAD Fp LBS	$\Omega_0 = 2.5$ [1] BRACE BRACKET ATTACHMENT TYPE	ALLOWABLE LATERAL LOAD Fp LBS	MAX BRACE RANGE ϑ	POWER-STUD+ SD2 CONCRETE ANCHOR (ICC ESR-2502) SPECIAL INSPECTION REQ'D DIA. da INCH	MIN. EFF. EMBED. hef INCH	MIN. HOLE DEPTH ho INCH	MIN. SPACING Smin INCH	MIN. END DIST. Cmin INCH	TORQUE REQ'D FT-LBS
50A TO 50E	360	50A TO 50B	170	30°- 45°	⅜	2	2⅝	6	3	20
50A TO 50D	250	50A TO 50A	120	46°- 60°						
50A TO 50F	450	50A TO 50C	220	30°- 45°	½	2	2¾	6	3	40
50A TO 50D	300	50A TO 50B	150	46°- 60°						

SEE DETAIL N0.00 FOR SECTION NOTES

[1] OVERSTRENGTH FACTOR AS REQUIRED FOR ANCHORAGE TO CONCRETE.

MASON WEST, INC.
1601 E. Miraloma Ave. Placentia, CA 92870
TEL (714) 630 - 0701, www.masonwest.com

Jiefu "Jeff" Zhang, SE
California SE No. S5270

PAGE
N2.65

SEISMIC BRACKET ATTACHMENT TO CONCRETE FILLED METAL DECK WITH (2) POWER-STUD+ SD2 CONCRETE ANCHORS

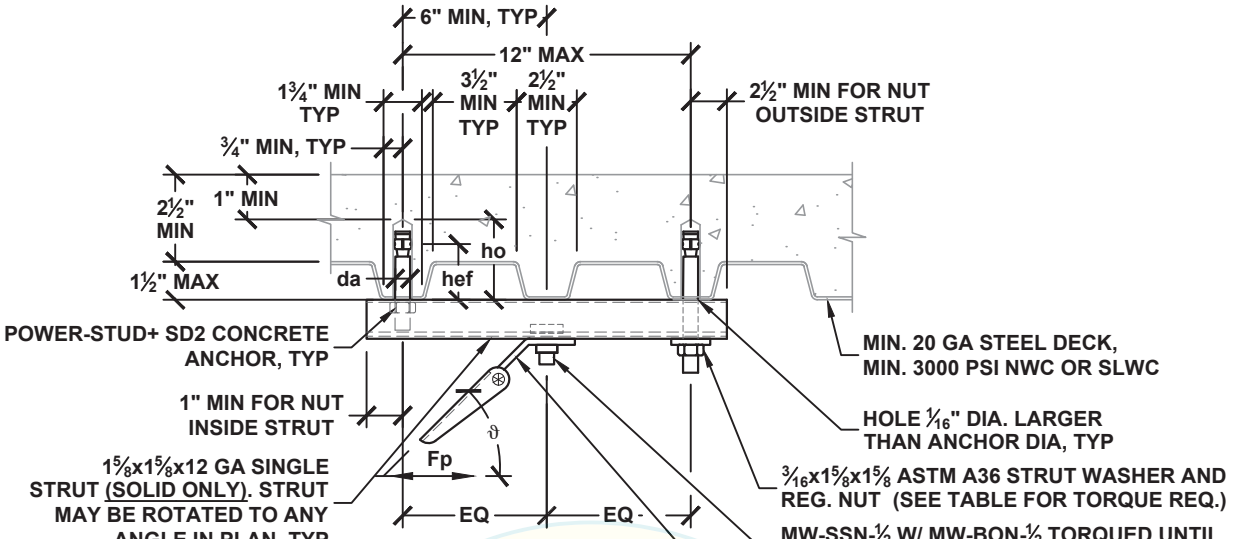

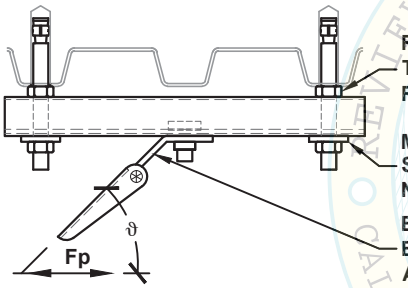

ALTERNATE INSTALL

BRACE BRACKET ATTACHMENT TYPE	ALLOWABLE LATERAL LOAD Fp LBS	$\Omega_0 = 2.5$ [1] BRACE BRACKET ATTACHMENT TYPE	ALLOWABLE LATERAL LOAD Fp LBS	MAX BRACE RANGE ϑ	POWER-STUD+ SD2 CONCRETE ANCHOR (ICC ESR-2502) SPECIAL INSPECTION REQ'D DIA. da INCH	MIN. EFF. EMBED. hef INCH	MIN. HOLE DEPTH ho INCH	MIN. SPACING Smin INCH	MIN. END DIST. Cmin INCH	TORQUE REQ'D FT-LBS
50A TO 50G	620	50A TO 50D	320	30°- 45°	⅜	2	2⅝	6	3	20
50A TO 50F	450	50A TO 50C	220	46°- 60°						
50A TO 50G	620	50A TO 50E	410	30°- 45°	½	2	2¾	6	3	40
50A TO 50F	530	50A TO 50D	270	46°- 60°						

SEE DETAIL N0.00 FOR SECTION NOTES

[1] OVERSTRENGTH FACTOR AS REQUIRED FOR ANCHORAGE TO CONCRETE.

MASON WEST, INC.
1601 E. Miraloma Ave. Placentia, CA 92870
TEL (714) 630 - 0701, www.masonwest.com

Jiefu "Jeff" Zhang, SE
California SE No. S5270

PAGE
N2.65.1

REVIEWED FOR CODE COMPLIANCE
CALIFORNIA BUILDING CODE 2013
OSHPD
OPM-0043-13
Reviewed by: Jeffrey Kikumoto
Date: 06/23/2016

SEISMIC BRACKET ATTACHMENT TO STEEL BEAM OR OPEN WEB STEEL TRUSS WITH SELF-DRILLING FASTENERS OR WELDING

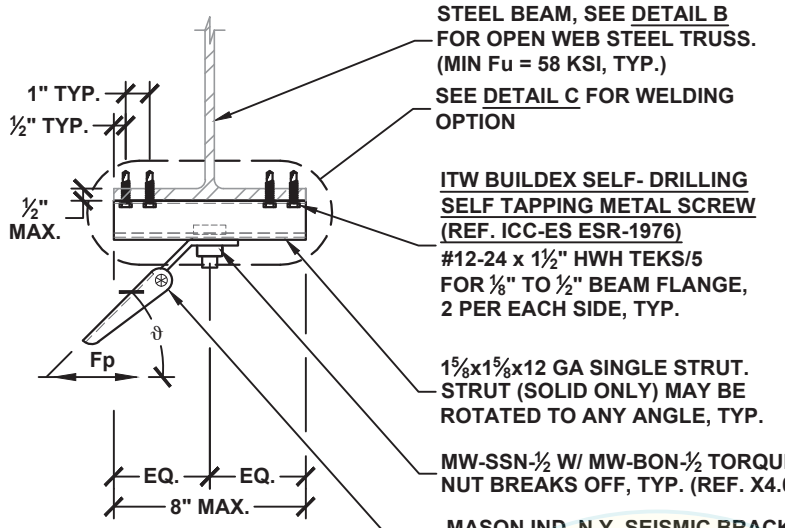

DETAIL A

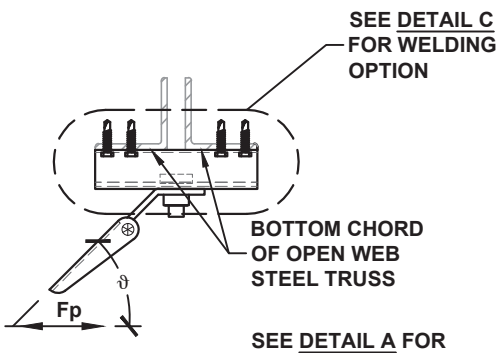

DETAIL B

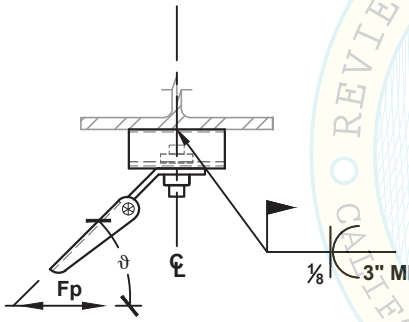

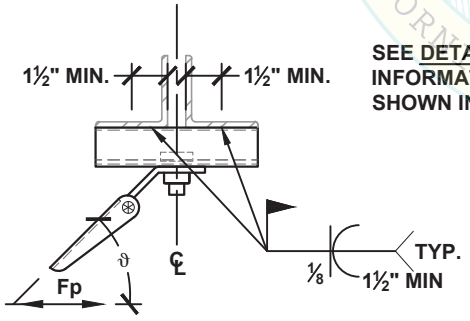

SEE DETAIL A FOR INFORMATION NOT SHOWN IN THIS DETAIL

DETAIL C
WELDING OPTION

NOTE: ALL WELDS TO BE MINIMUM 70xx ELECTRODE WELDS

BRACE BRACKET ATTACHMENT TYPE	ALLOWABLE LATERAL LOAD Fp LBS	MAX BRACE RANGE ϑ
50A TO 50G	590	30°- 45°
50A TO 50F	480	46°- 60°

1 SEE DETAIL N0.00 FOR SECTION NOTES

2 ATTACHMENT TO STEEL BEAM SHALL NOT BE PLACED WITHIN THE PROTECTED ZONE AS DEFINED IN AISC 341.

OSHPD REVIEWED FOR CODE COMPLIANCE CALIFORNIA BUILDING CODE, 2013
OPM-0043-13
BY: Jeffrey Y. Kikumoto
DATE: 06/23/2016

MASON WEST, INC.
1601 E. Miraloma Ave. Placentia, CA 92870
TEL (714) 630 - 0701, www.masonwest.com

Jiefu "Jeff" Zhang, SE
California SE No. S5270

SEISMIC BRACKET ATTACHMENT TO STEEL BEAM OR OPEN WEB STEEL TRUSS STRUCTURE WITH SELF-DRILLING FASTENERS

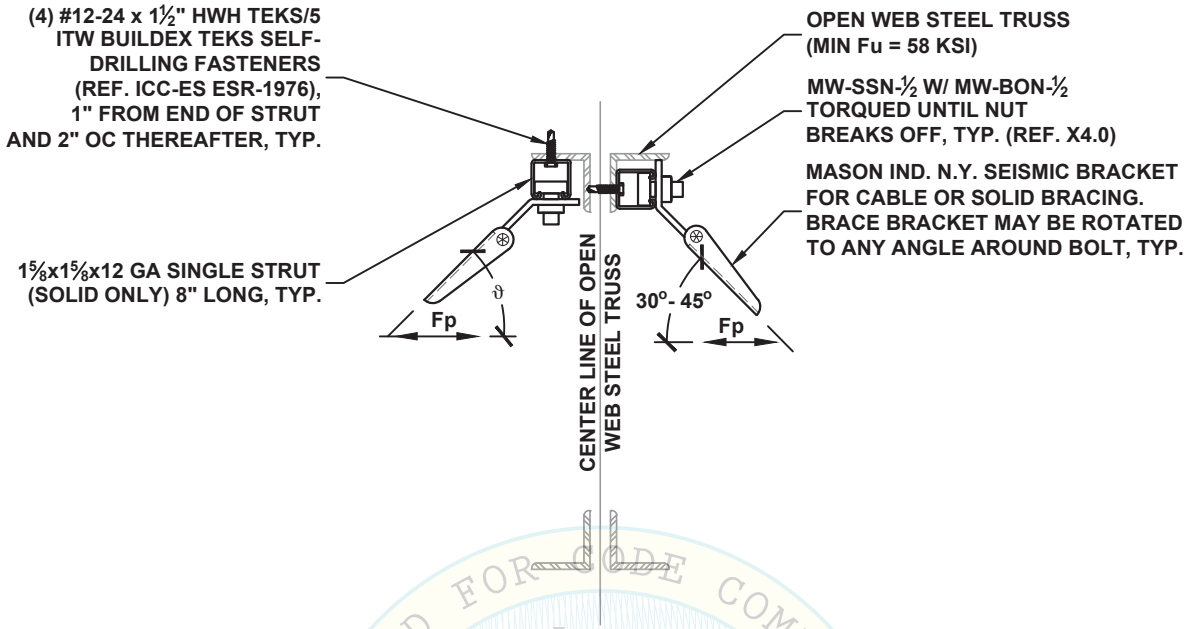

DETAIL A

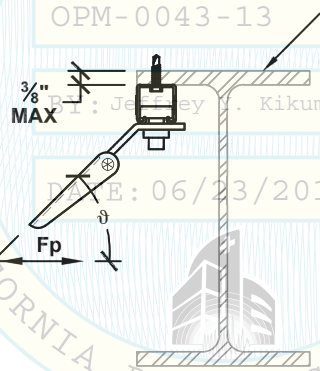

DETAIL B

BRACE BRACKET ATTACHMENT TYPE	ALLOWABLE LATERAL LOAD Fp LBS	MAX BRACE RANGE ϑ	BOLT DIA. INCH
50A TO 50G	590	30°- 45°	½
50A TO 50F	480	46°- 60°	½

1 SEE DETAIL N0.00 FOR SECTION NOTES
2 ATTACHMENT TO STEEL BEAM SHALL NOT BE PLACED WITHIN THE PROTECTED ZONE AS DEFINED IN AISC 341.

REVIEWED FOR CODE COMPLIANCE
CALIFORNIA BUILDING CODE, 2013
oshpd
OPM-0043-13
By: Jeffrey T. Kikumoto
DATE: 06/23/2016

MASON WEST, INC.
1601 E. Miraloma Ave. Placentia, CA 92870
TEL (714) 630 - 0701, www.masonwest.com

Jiefu "Jeff" Zhang, SE
California SE No. S5270

PAGE
N3.12

SEISMIC BRACKET WELDED ATTACHMENT TO A STRUCTURAL STEEL BEAM

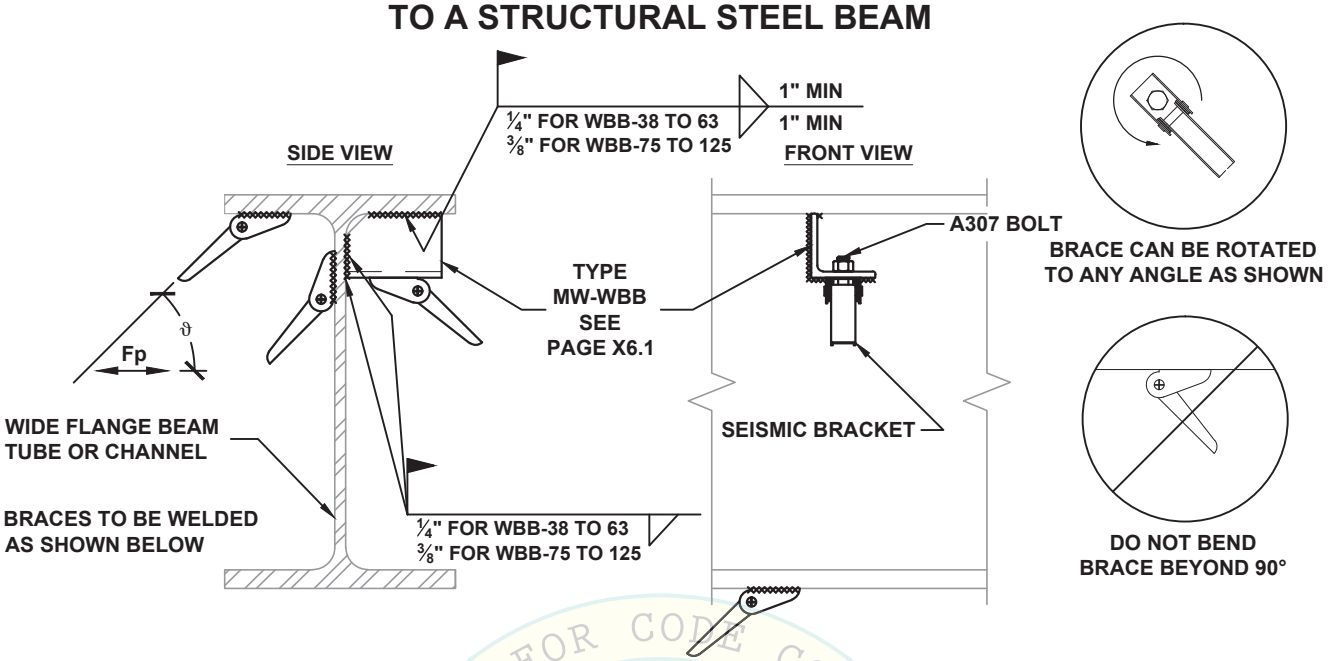

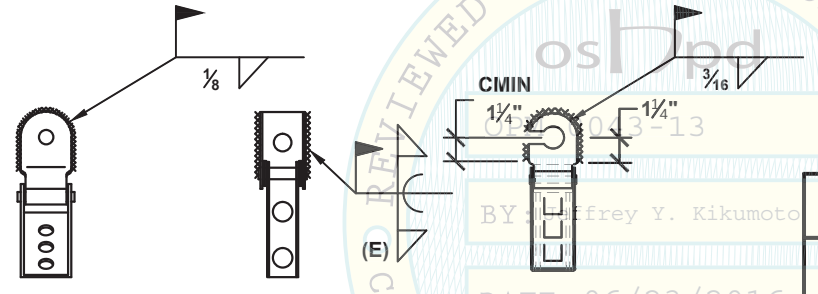

NOTE: ALL WELDS TO BE MINIMUM 70xx ELECTRODE WELDS

REVIEWED FOR CODE COMPLIANCE CALIFORNIA BUILDING CODE
oshpd
OPM-0043-13
BY Jeffrey Y. Kikumoto
DATE 06/23/2016

FOR SSB BRACKETS [1,2]				
ALLOWABLE LATERAL LOAD, Fp LBS		ALLOWABLE LATERAL LOAD, Fp LBS		
BRACE BRACKET ATTACHMENT TYPE	WELD TO STEEL	BRACE BRACKET ATTACHMENT TYPE	WITH MW-WBB	MAX BRACE RANGE ϑ
75A TO 75Q	4440	75A TO 75Q	3800	30°- 45°
75A TO 75P	3360	75A TO 75N	2190	46°- 60°
100A TO 100R	6410	100A TO 100Q	3800	30°- 45°
100A TO 100Q	4280	100A TO 100N	2190	46°- 60°
125A TO 125R	6410	125A TO 125Q	3800	30°- 45°
125A TO 125Q	4280	125A TO 125N	2190	46°- 60°

FOR SSBS, SCB, & SHB BRACKETS WITH OR WITHOUT MW-WBB		
BRACE BRACKET ATTACHMENT TYPE	ALLOWABLE LATERAL LOAD Fp LBS	MAX BRACE RANGE ϑ
38A TO 38K	1120	30°- 45°
38A TO 38J	890	46°- 60°
50A TO 50N	2000	30°- 45°
50A TO 50L	1240	46°- 60°
63A TO 63N	2150	30°- 45°
63A TO 63M	1240	46°- 60°
75A TO 75N	2320	30°- 45°
75A TO 75M	1700	46°- 60°

[1] SEE DETAIL N0.00 FOR SECTION NOTES
[2] WELDED ATTACHMENT TO STEEL BEAM SHALL NOT BE PLACED WITHIN THE PROTECTED ZONE AS DEFINED IN AISC 341.

MASON WEST, INC.
1601 E. Miraloma Ave. Placentia, CA 92870
TEL (714) 630 - 0701, www.masonwest.com

Jiefu "Jeff" Zhang, SE
California SE No. S5270

PAGE
N3.13

THIS PAGE INTENTIONALLY LEFT BLANK.

MASON WEST, INC.
1601 E. Miraloma Ave. Placentia, CA 92870
TEL (714) 630 - 0701, www.masonwest.com

Jiefu "Jeff" Zhang, SE
California SE No. S5270

PAGE
N3.14

SEISMIC BRACKET ATTACHMENT TO STEEL BEAM WITH STEEL BEAM CLAMPS

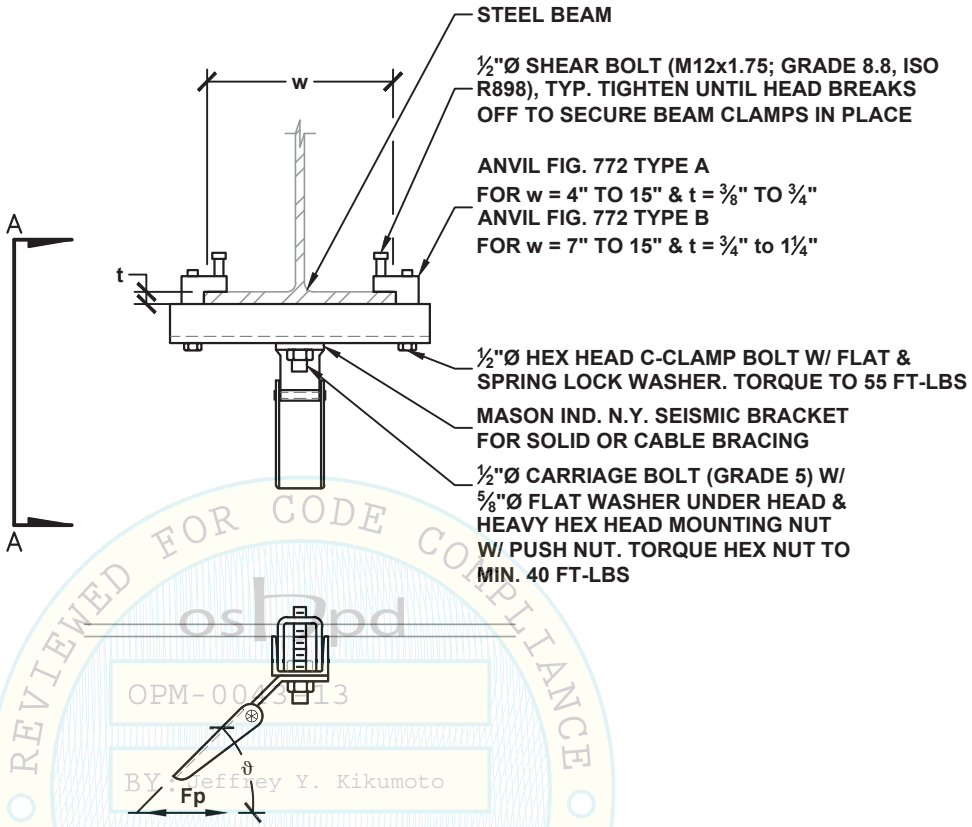

SECTION A-A

REVIEWED FOR CODE COMPLIANCE
CALIFORNIA BUILDING CODE, 2013
OPM-0043-13
BY: Jeffrey Y. Kikumoto
DATE: 06/23/2016

BRACE BRACKET CONNECTION TYPE	ALLOWABLE LATERAL LOAD Fp LBS	MAX BRACE RANGE ϑ	CLAMP MODEL
50A TO 50F	480	30°- 45°	ANVIL FIG. 772
50A TO 50D	330	46°- 60°	

1 SEE DETAIL N0.00 FOR SECTION NOTES
2 ATTACHMENT TO STEEL BEAM SHALL NOT BE PLACED WITHIN THE PROTECTED ZONE AS DEFINED IN AISC 341.
3 BRACE BRACKET TO BE INSTALLED PARALLEL TO BEAM ONLY, AND SHALL NOT BE INSTALLED PERPENDICULAR TO BEAM UNLESS APPROVED BY SEOR.

MASON WEST, INC.
1601 E. Miraloma Ave. Placentia, CA 92870
TEL (714) 630 - 0701, www.masonwest.com

Jiefu "Jeff" Zhang, SE
California SE No. S5270

PAGE
N3.15

SEISMIC BRACKET ATTACHMENT TO OPEN WEB STEEL TRUSS WITH STEEL BEAM CLAMPS

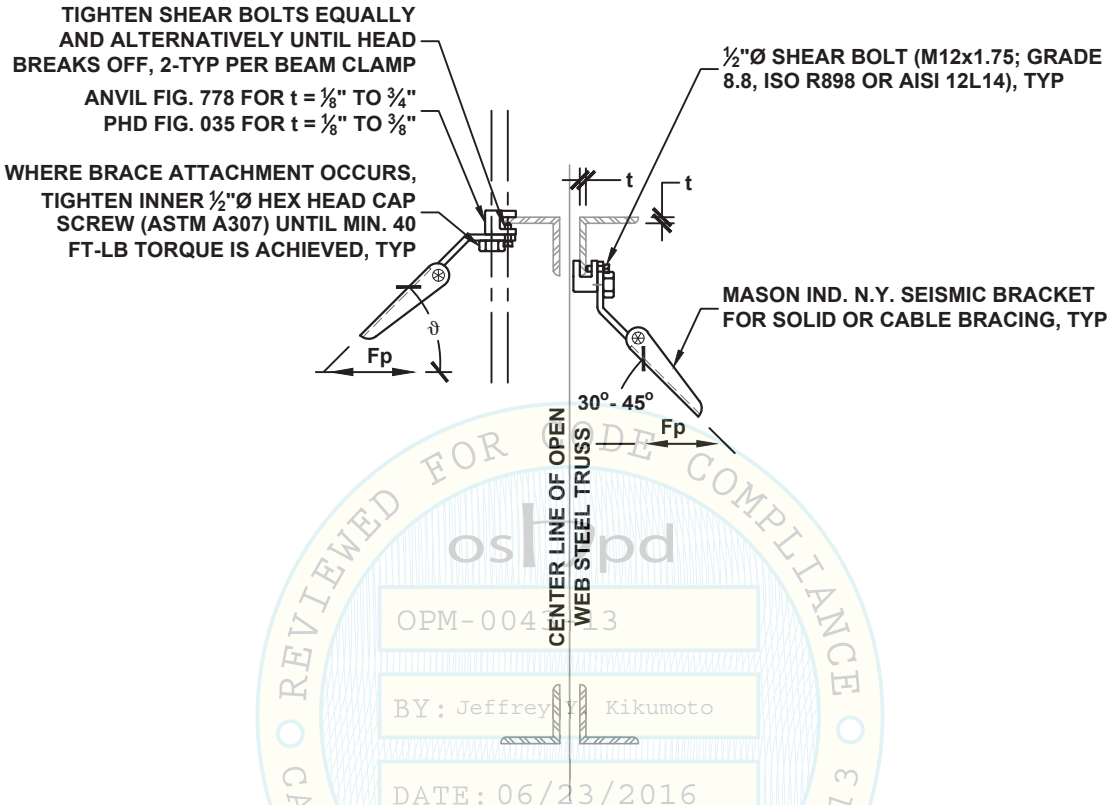

REVIEWED FOR CODE COMPLIANCE
CALIFORNIA BUILDING CODE, 2013
oshpd
OPM-0043-13
BY: Jeffrey Y. Kikumoto
DATE: 06/23/2016

PERPENDICULAR TO BEAM		PARALLEL TO BEAM			
BRACE BRACKET CONNECTION TYPE	ALLOWABLE LATERAL LOAD Fp LBS	BRACE BRACKET CONNECTION TYPE	ALLOWABLE LATERAL LOAD Fp LBS	MAX BRACE RANGE ϑ	CLAMP MODEL
50A TO 50H	740	50A TO 50J	880	30°- 45°	ANVIL FIG. 778 PHD FIG. 035
50A TO 50E	440	50A TO 50G	620	46°- 60°	

1 SEE DETAIL N0.00 FOR SECTION NOTES
2 ATTACHMENT TO STEEL BEAM SHALL NOT BE PLACED WITHIN THE PROTECTED ZONE AS DEFINED IN AISC 341.
3 STEEL MEMBER MUST FULLY ENGAGE THROAT OF BEAM CLAMP.
4 ATTACHMENT TO STEEL MEMBER SHALL BE WITHIN 6" OF CHORD PANEL POINT.

MASON WEST, INC.
1601 E. Miraloma Ave. Placentia, CA 92870
TEL (714) 630 - 0701, www.masonwest.com

Jiefu "Jeff" Zhang, SE
California SE No. S5270

PAGE
N3.16

SEISMIC BRACKET ATTACHMENT TO STRUCTURAL TIMBER WITH (1) THRU BOLT OR THREADED ROD

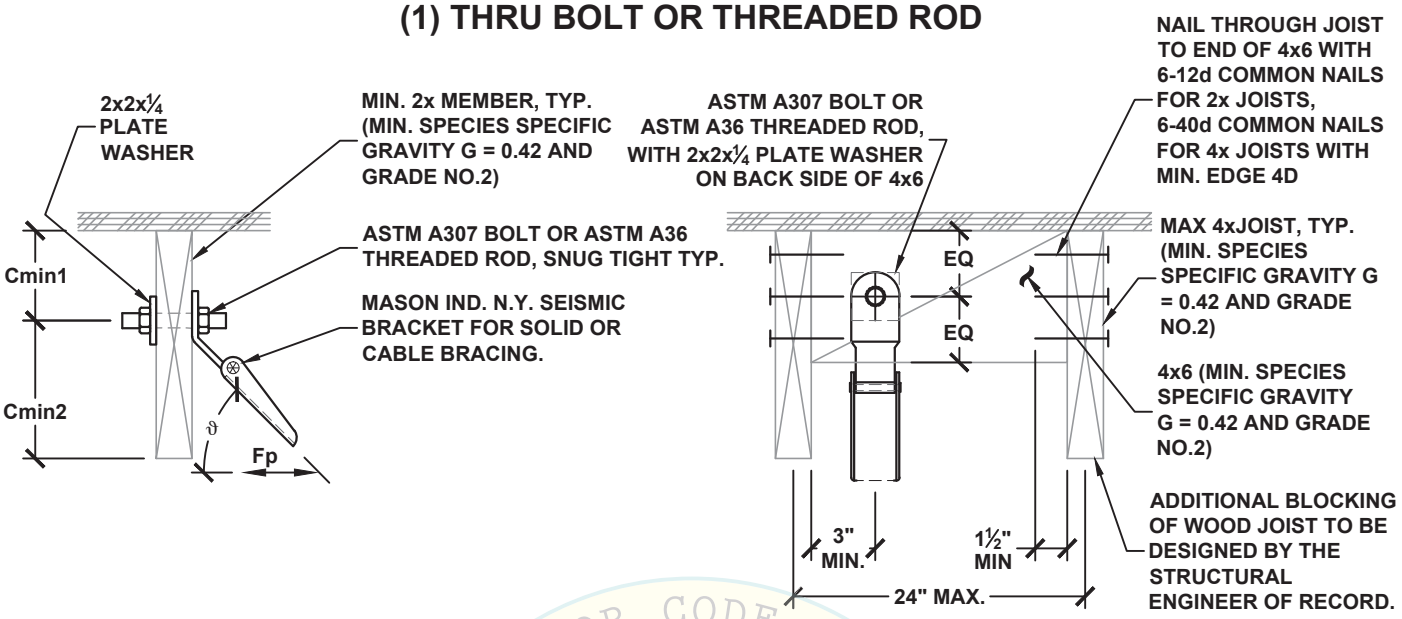

SEISMIC BRACE BRACKET PERPENDICULAR TO JOIST

SEISMIC BRACE BRACKET PARALLEL TO JOIST

REVIEWED FOR CODE COMPLIANCE
CALIFORNIA BUILDING CODE 2013
OPM-0043-13
BY: Jeffrey Y. Kikumoto
DATE: 06/23/2016

BRACE BRACKET ATTACHMENT TYPE	ALLOWABLE LATERAL LOAD Fp LBS	MAX BRACE RANGE ϑ	ASTM A307 BOLTS OR ASTM A36 THREADED ROD		
			DIA. da INCH	MIN. EDGE Cmin1 INCH	MIN. EDGE Cmin2 INCH
38A TO 38D	250	30°- 45°	⅜	1⅜	1½
38A TO 38B	150	46°- 60°			
50A TO 50D	300	30°- 45°	½	1⅜	2
50A TO 50B	170	46°- 60°			
63A TO 63D	340	30°- 45°	⅝	1⅜	2½
63A TO 63C	200	46°- 60°			

SEE DETAIL N0.00 FOR SECTION NOTES

MASON WEST, INC.
1601 E. Miraloma Ave. Placentia, CA 92870
TEL (714) 630 - 0701, www.masonwest.com

Jiefu "Jeff" Zhang, SE
California SE No. S5270

PAGE
N4.10

SEISMIC BRACKET ATTACHMENT TO WOOD I-JOISTS WITH (1) THRU BOLT OR THREADED ROD

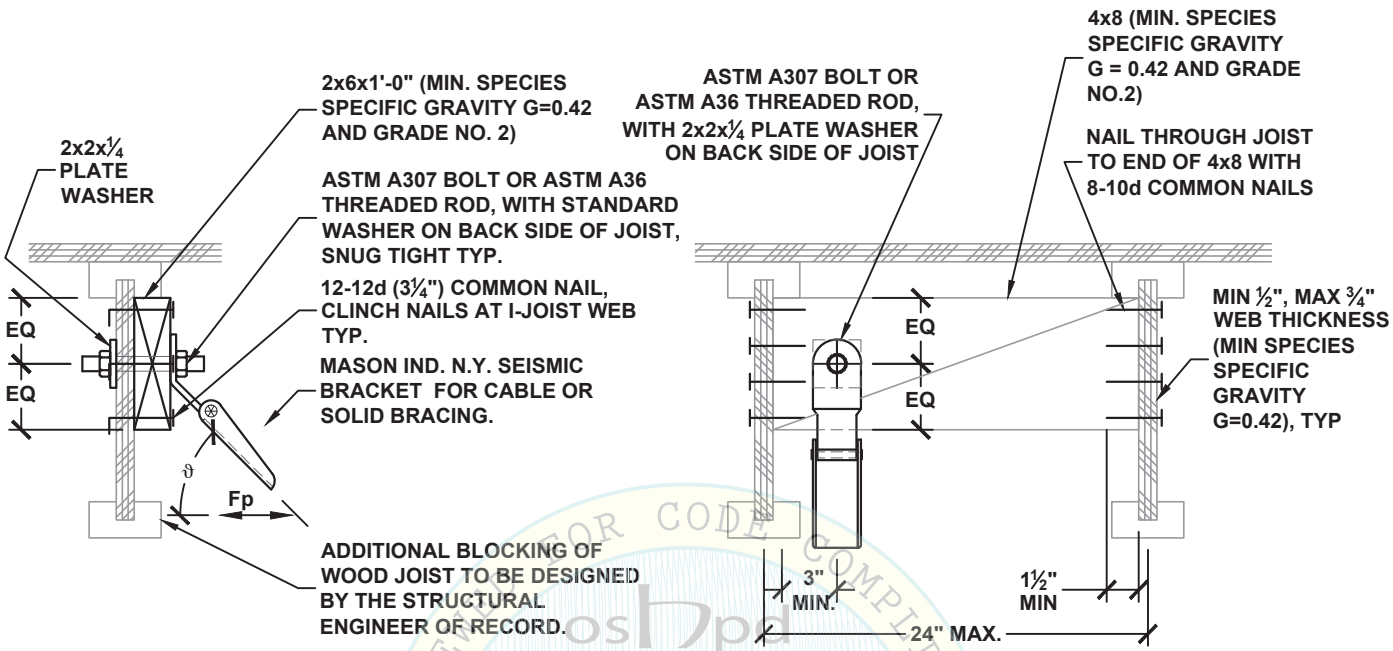

PERPENDICULAR TO JOIST **PARALLEL TO JOIST**

REVIEWED FOR CODE COMPLIANCE
OSHPD
OPM-0043-13
BY: Jeffrey Y. Kikumoto
DATE: 06/23/2016
CALIFORNIA BUILDING CODE, 2013

BRACE BRACKET ATTACHMENT TYPE	ALLOWABLE LATERAL LOAD Fp LBS	MAX BRACE RANGE ϑ	DIA. da INCH
38A TO 38B	150	30°- 45°	⅜
38A TO 38A	80	46°- 60°	
50A TO 50C	180	30°- 45°	½
50A TO 50A	100	46°- 60°	
63A TO 63C	210	30°- 45°	⅝
63A TO 63A	120	46°- 60°	

SEE DETAIL N0.00 FOR SECTION NOTES

MASON WEST, INC.
1601 E. Miraloma Ave. Placentia, CA 92870
TEL (714) 630 - 0701, www.masonwest.com

Jiefu "Jeff" Zhang, SE
California SE No. S5270

PAGE
N4.11

SEISMIC BRACKET ATTACHMENT TO WOOD I-JOISTS

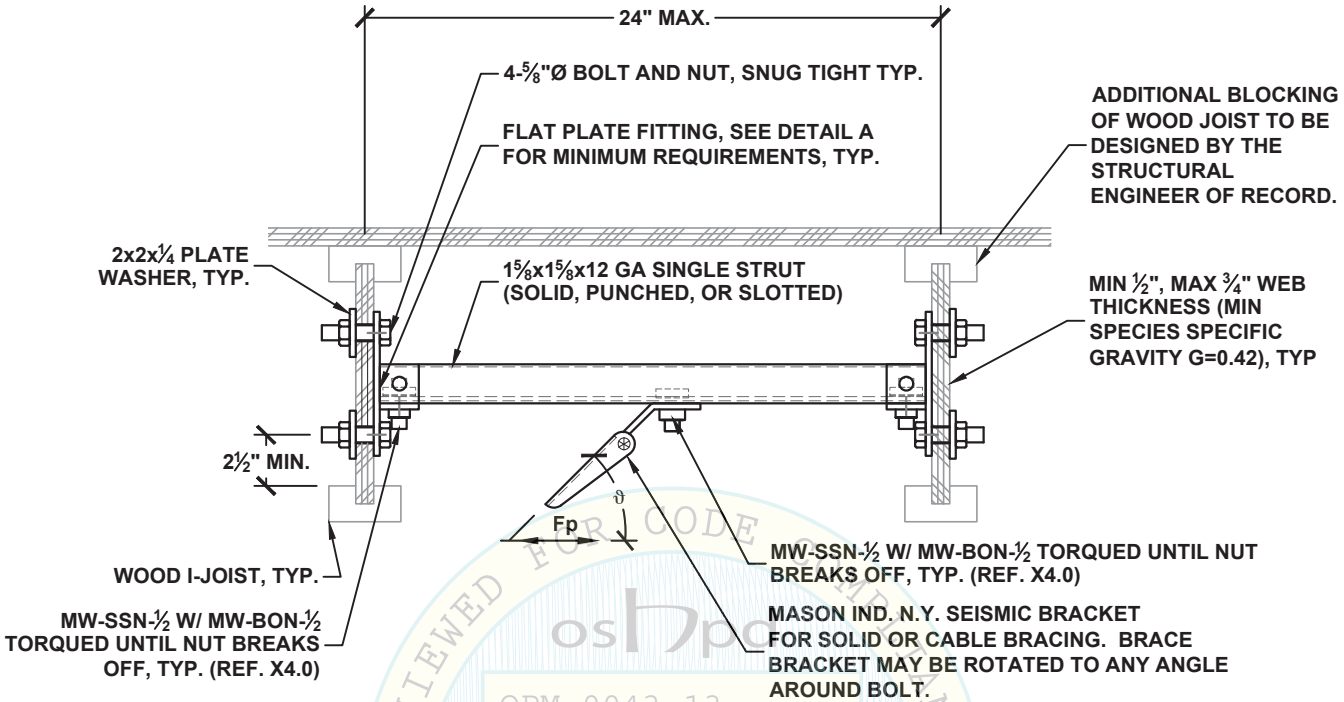

REVIEWED FOR CODE COMPLIANCE
CALIFORNIA BUILDING CODE, 2013
OPM-0043-13
BY: Jeffrey Y. Kikumoto
DATE: 06/23/2016

BRACE BRACKET ATTACHMENT TYPE	ALLOWABLE LATERAL LOAD Fp LBS	MAX BRACE RANGE ϑ
50A TO 50E	400	30°- 45°
50A TO 50E	350	46°- 60°

SEE DETAIL N0.00 FOR SECTION NOTES

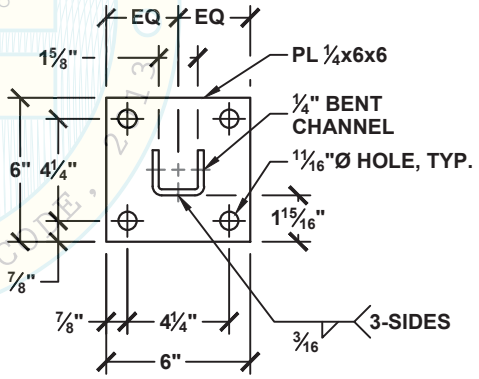

STEEL PLATE AND SHAPE TO BE ASTM A36

DETAIL A

MASON WEST, INC.
1601 E. Miraloma Ave. Placentia, CA 92870
TEL (714) 630 - 0701, www.masonwest.com

Jiefu "Jeff" Zhang, SE
California SE No. S5270

PAGE
N4.12

SEISMIC BRACKET ATTACHMENT TO WOOD JOIST

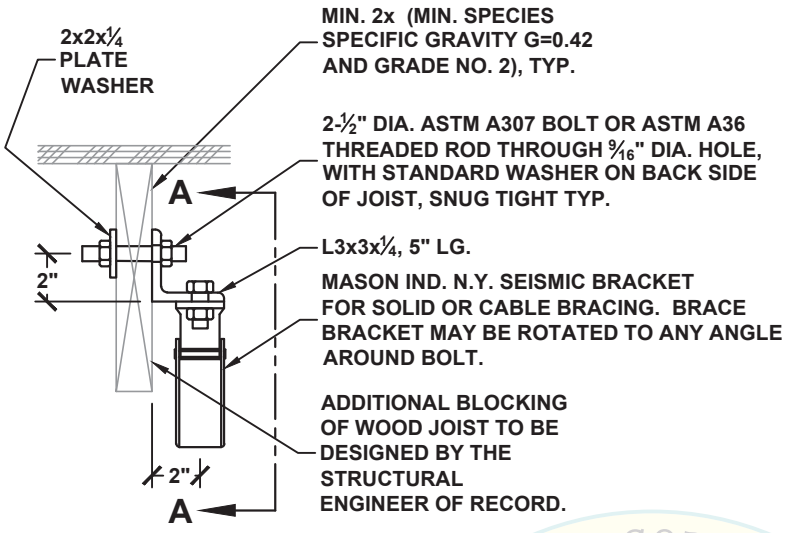

AT JOIST

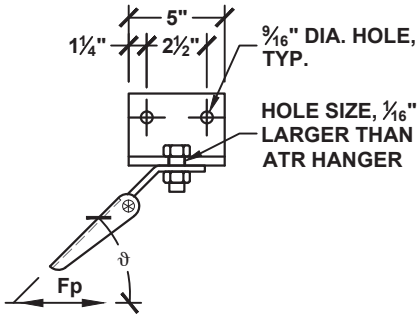

VIEW A-A

REVIEWED FOR CODE COMPLIANCE
CALIFORNIA BUILDING CODE
oshpd
OPM-0043-13
BY: Jeffrey Y. Kikumoto
DATE: 06/23/16

BRACE BRACKET ATTACHMENT TYPE	ALLOWABLE LATERAL LOAD Fp LBS	MAX BRACE RANGE ϑ	DIA. da INCH
38A TO 38E	420	30°- 45°	3/8
38A TO 38D	300	46°- 60°	
50A TO 50E	420	30°- 45°	½
50A TO 50D	300	46°- 60°	
63A TO 63E	420	30°- 45°	5/8
63A TO 63D	300	46°- 60°	

SEE DETAIL N0.00 FOR SECTION NOTES

MASON WEST, INC.
1601 E. Miraloma Ave. Placentia, CA 92870
TEL (714) 630 - 0701, www.masonwest.com

Jiefu "Jeff" Zhang, SE
California SE No. S5270

PAGE
N4.13

SEISMIC BRACKET ATTACHMENT TO CMU WALL

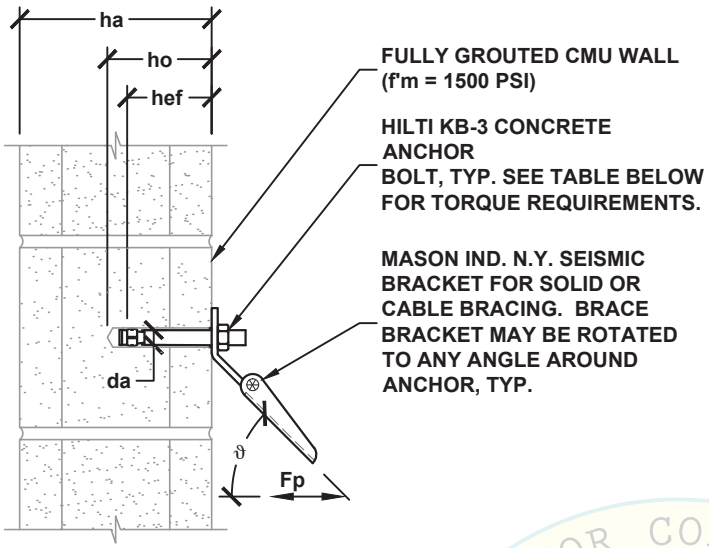

DETAIL FOR UNCRACKED CONDITIONS

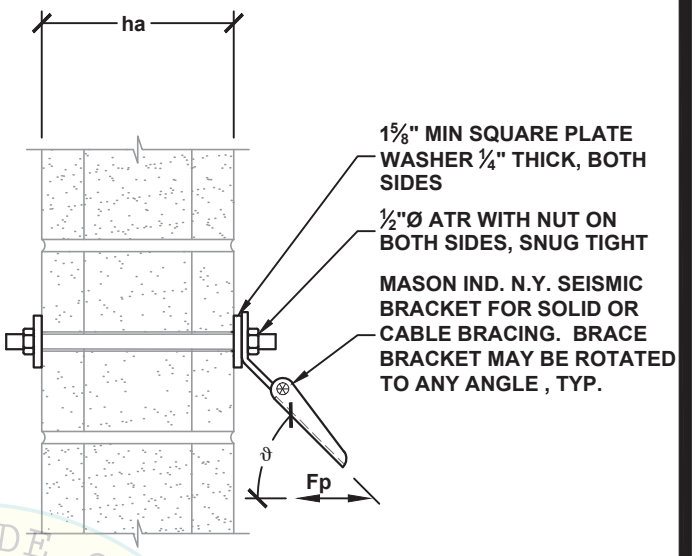

DETAIL FOR CRACKED CONDITIONS

osHpd
OPM-0043-13
REVIEWED FOR CODE COMPLIANCE
DATE: 06/23/2016
CALIFORNIA BUILDING CODE

NOTE:

WHEN USING HILTI KB-3 CONCRETE ANCHOR ATTACHMENT TO CMU WALL, SEOR SHALL VERIFY:

(1) MASONRY IS NOT CRACKED AS DEFINED IN ICC-ES AC01 SECTION 2.3; CALCULATION REQUIRED TO SHOW MASONRY WALL WOULD NOT CRACK UNDER THE DESIGN EARTHQUAKE LOADS UNDER ALL SERVICE LOAD CONDITIONS; WALL HAS TO REMAIN ELASTIC.

(2) MASONRY WALL SHALL BE FULLY GROUTED IN ACCORDANCE WITH ESR-1385 SECTION 3.2.

(3) CONDITION OF USE REQUIREMENTS IN ACCORDANCE WITH ESR-1385 SECTION 5.0 IS SATISFIED.

BRACE BRACKET ATTACHMENT TYPE	ALLOWABLE LATERAL LOAD Fp LBS	$\Omega_0 = 2.5^3$ BRACE BRACKET ATTACHMENT TYPE	ALLOWABLE LATERAL LOAD Fp LBS	MAX BRACE RANGE ϑ	HILTI KB-3 CONCRETE ANCHOR (ICC ESR-1385) SPECIAL INSPECTION REQ'D MIN. DIA. da INCH	MIN. EFF. EMBED. hef INCH	MIN. HOLE DEPTH ho INCH	MIN. BASE TH. ha INCH	MIN. EDGE Cmin INCH	MIN. SPACING Smin INCH	TORQUE REQ'D FT-LBS
38A TO 38E	390	38A TO 38C	190	30°- 45°	⅜	2½	2 15/16	3¾	12	8	15
38A TO 38D	310	38A TO 38B	150	46°- 60°							
50A TO 50F	520	50A TO 50D	250	30°- 45°	½	3½	4 1/16	5¼	12	8	25
50A TO 50E	430	50A TO 50C	210	46°- 60°							
63A TO 63H	700	63A TO 63D	330	30°- 45°	⅝	4	4 11/16	6	12	8	65
63A TO 63F	560	63A TO 63D	270	46°- 60°							
75A TO 75J	900	75A TO 75E	430	30°- 45°	¾	4⅜	5 5/16	6 9/16	12	8	120
75A TO 75H	720	75A TO 75E	350	46°- 60°							

1 SEE DETAIL N0.00 FOR SECTION NOTES

2 HILTI KB-3 MASONRY ANCHOR MUST BE INSTALLED IN THE FACE OF CMU SHELLS A MINIMUM OF 1⅜" FROM ANY VERTICAL MORTAR JOINT AND LIMITED TO ONE ANCHOR PER CELL.

3 OVERSTRENGTH FACTOR AS REQUIRED FOR ANCHORAGE TO CONCRETE

MASON WEST, INC.
1601 E. Miraloma Ave. Placentia, CA 92870
TEL (714) 630 - 0701, www.masonwest.com

Jiefu "Jeff" Zhang, SE
California SE No. S5270

PAGE
N5.10

SEISMIC BRACKET ATTACHMENT TO FULLY GROUTED CMU WALL WITH (2) HILTI KB-3 CONCRETE ANCHOR

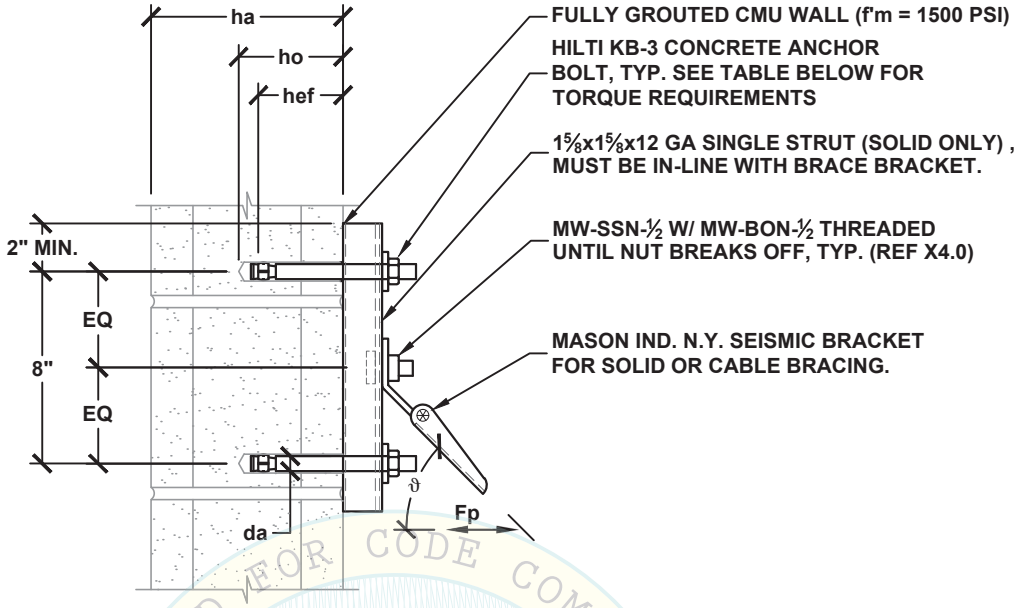

REVIEWED FOR CODE COMPLIANCE
OSHPD
OPM-0043-13
BY: Jeffrey Y. Kikumoto
DATE: 06/23/2016
CALIFORNIA BUILDING CODE

NOTE:

WHEN USING HILTI KB-3 CONCRETE ANCHOR ATTACHMENT TO CMU WALL, SEOR SHALL VERIFY:

(1) MASONRY IS NOT CRACKED AS DEFINED IN ICC-ES AC01 SECTION 2.3; CALCULATION REQUIRED TO SHOW MASONRY WALL WOULD NOT CRACK UNDER THE DESIGN EARTHQUAKE LOADS UNDER ALL SERVICE LOAD CONDITIONS; WALL HAS TO REMAIN ELASTIC.

(2) MASONRY WALL SHALL BE FULLY GROUTED IN ACCORDANCE WITH ESR-1385 SECTION 3.2.

(3) CONDITION OF USE REQUIREMENTS IN ACCORDANCE WITH ESR-1385 SECTION 5.0 IS SATISFIED.

BRACE BRACKET ATTACHMENT TYPE	ALLOWABLE LATERAL LOAD Fp LBS	$\Omega_0 = 2.5^3$ BRACE BRACKET ATTACHMENT TYPE	$\Omega_0 = 2.5^3$ ALLOWABLE LATERAL LOAD Fp LBS	MAX BRACE RANGE ϑ	HILTI KB-3 CONCRETE ANCHOR (ICC ESR-1385) SPECIAL INSPECTION REQ'D DIA. da INCH	MIN. EFF. EMBED. hef INCH	MIN. HOLE DEPTH ho INCH	MIN. BASE TH. ha INCH	MIN. EDGE Cmin INCH	MIN. SPACING Smin INCH	TORQUE REQ'D FT-LBS
50A TO 50K	1000	50A TO 50F	500	30°- 45°	½	3½	4 1/16	5¼	12	8	25
50A TO 50G	690	50A TO 50E	410	46°- 60°							
50A TO 50K	1000	50A TO 50G	670	30°- 45°	⅝	4	4 11/16	6	12	8	65
50A TO 50G	600	50A TO 50F	540	46°- 60°							

1 SEE DETAIL N0.00 FOR SECTION NOTES

2 HILTI KB-3 MASONRY ANCHOR MUST BE INSTALLED IN THE FACE OF CMU SHELLS A MINIMUM OF 1⅜" FROM ANY VERTICAL MORTAR JOINT AND LIMITED TO ONE ANCHOR PER CELL.

3 OVERSTRENGTH FACTOR AS REQUIRED FOR ANCHORAGE TO CONCRETE

MASON WEST, INC.
1601 E. Miraloma Ave. Placentia, CA 92870
TEL (714) 630 - 0701, www.masonwest.com

Jiefu "Jeff" Zhang, SE
California SE No. S5270

PAGE
N5.11

SEISMIC BRACKET ATTACHMENT TO FULL HEIGHT METAL STUD WALL

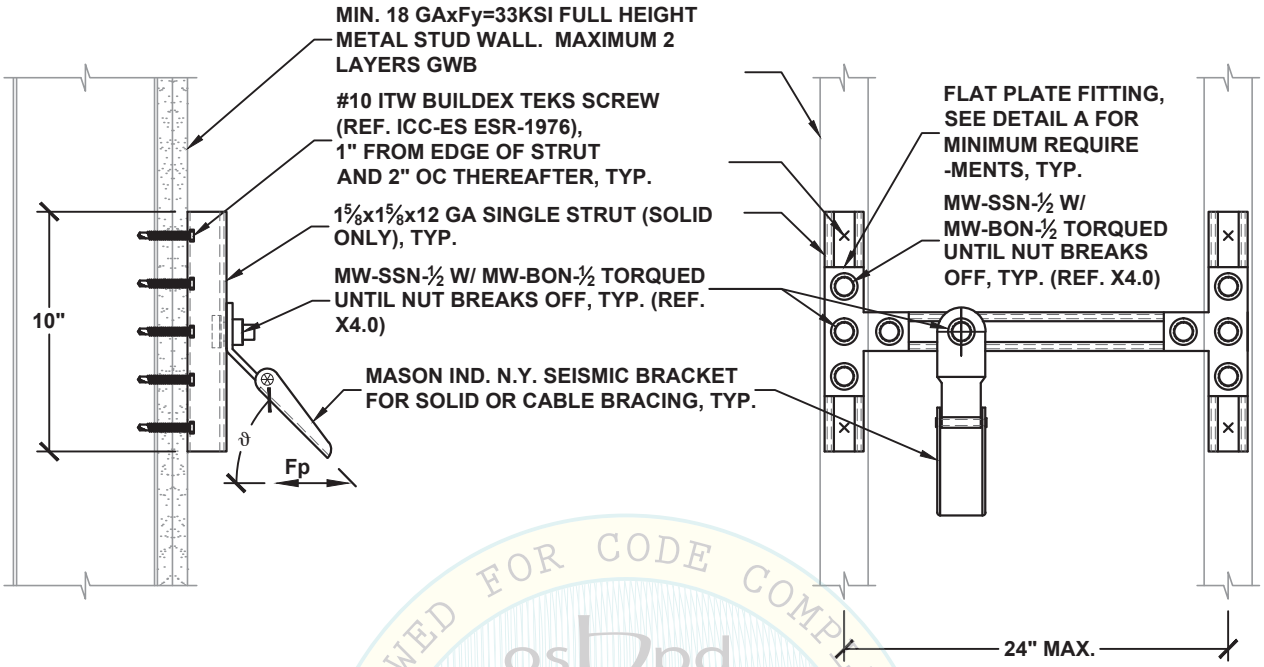

SEISMIC BRACE BRACKET AT STUD

- OR -

SEISMIC BRACE BRACKET IN BETWEEN STUDS

REVIEWED FOR CODE COMPLIANCE
CALIFORNIA BUILDING CODE 2013
oshpd
OPM-0043-13
BY: Jeffrey Y. Kikumoto
DATE: 06/23/2016

BRACE BRACKET ATTACHMENT TYPE	ALLOWABLE LATERAL LOAD Fp LBS	MAX BRACE RANGE ϑ
50A TO 50D	260	30°- 45°
50A TO 50C	190	46°- 60°

SEE DETAIL N0.00 FOR SECTION NOTES

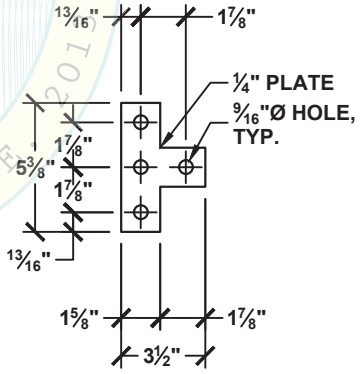

STEEL PLATE TO BE ASTM A36

DETAIL A

MASON WEST, INC.
1601 E. Miraloma Ave. Placentia, CA 92870
TEL (714) 630 - 0701, www.masonwest.com

Jiefu "Jeff" Zhang, SE
California SE No. S5270

PAGE
N6.10

SEISMIC BRACKET ATTACHMENT TO FULL HEIGHT METAL STUD WALL

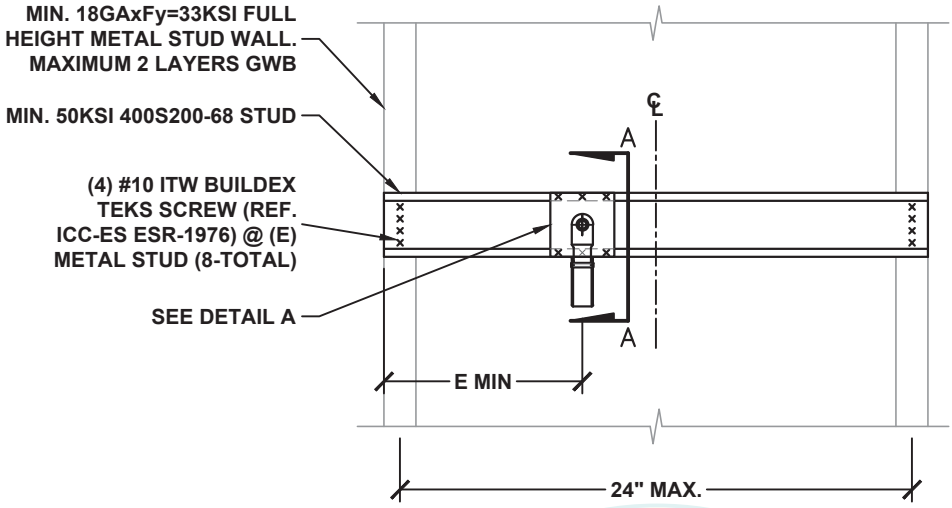

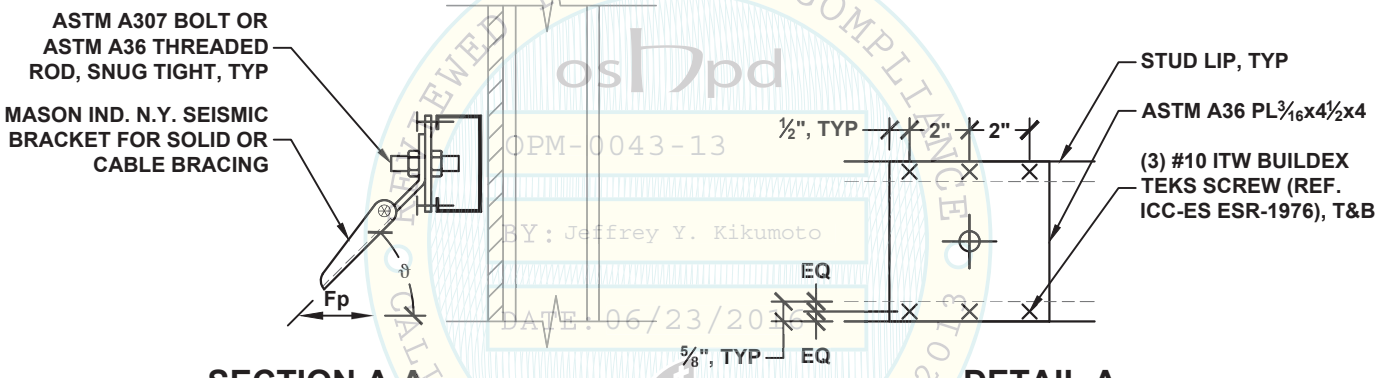

SECTION A-A **DETAIL A**

REVIEWED FOR CODE COMPLIANCE CALIFORNIA BUILDING CODE, 2013
oshpd
OPM-0043-13
BY: Jeffrey Y. Kikumoto
DATE: 06/23/2016

BRACE BRACKET ATTACHMENT TYPE	E MIN (in)	ALLOWABLE LATERAL LOAD Fp LBS	MAX BRACE RANGE ϑ
38A TO 38C	4	200	30°- 45°
38A		115	46°- 60°
50A TO 50C		200	30°- 45°
50A		115	46°- 60°
63A TO 63C		200	30°- 45°
63A		115	46°- 60°

SEE DETAIL N0.00 FOR SECTION NOTES

MASON WEST, INC.
1601 E. Miraloma Ave. Placentia, CA 92870
TEL (714) 630 - 0701, www.masonwest.com

Jiefu "Jeff" Zhang, SE
California SE No. S5270

PAGE
N6.11

SEISMIC BRACKET ATTACHMENT
TO NON-CONCRETE FILLED METAL DECK

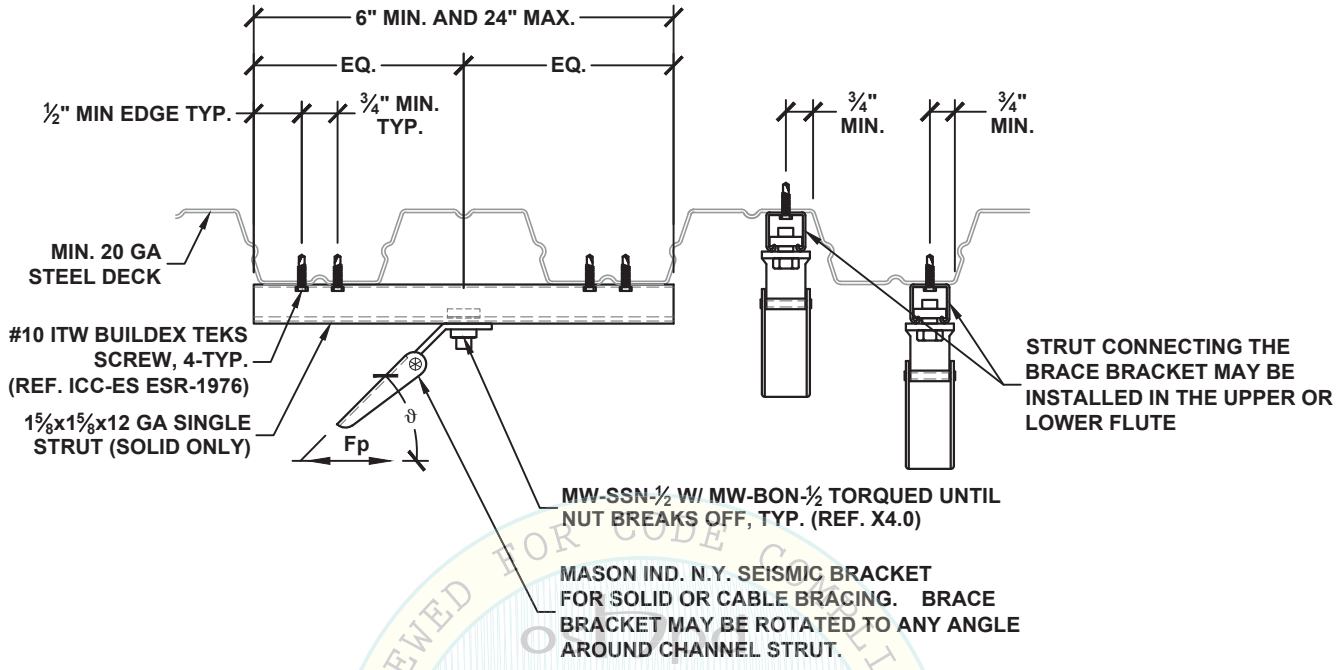

REVIEWED FOR CODE COMPLIANCE
CALIFORNIA BUILDING CODE, 2013
OPM-0043-13
BY: Jeffrey Y. Kikumoto
DATE: 06/23/2016

BRACE BRACKET ATTACHMENT TYPE	ALLOWABLE LATERAL LOAD Fp LBS	MAX BRACE RANGE ϑ
50A TO 50E	350	30°- 45°
50A TO 50C	200	46°- 60°

SEE DETAIL N0.00 FOR SECTION NOTES

MASON WEST, INC.
1601 E. Miraloma Ave. Placentia, CA 92870
TEL (714) 630 - 0701, www.masonwest.com

Jiefu "Jeff" Zhang, SE
California SE No. S5270

PAGE
N7.10

PIPE	STEEL PIPE (STANDARD SCHEDULE) WATER FILLED WITH INSULATION MAXIMUM SEISMIC BRACE SPACINGS	VERTICAL FORCE Fpv = 0.375g (ASD)

NPS	PIPE SCHEDULE	MAX WEIGHT PER FOOT (LBS/FT)	MAX GRAVITY SUPPORT SPACING (FT)	MAX TRANSVERSE BRACE SPACING BASED ON PIPE SIZE AND g FORCE (FT)						
				g FORCE						
				0.25	0.375	0.5	0.625	0.75	0.875	1
1/2	40	1.5	7	23	20	18	17	16	15	14
3/4	40	2.0	7	27	23	21	20	19	18	17
1	40	2.8	7	31	28	25	23	22	21	20
1 1/4	40	3.8	7	35	32	30	28	26	25	24
1 1/2	40	4.5	9	38	35	32	30	29	27	26
2	40	6.2	10	43	39	36	34	32	31	30
2 1/2	40	9.1	11	48	43	40	38	36	35	34
3	40	12.1	12	53	48	44	42	40	39	37
4	40	18.3	14	59	53	50	47	45	43	42
5	40	26.6	15	65	59	54	52	49	46	43
6	40	34.8	17	71	64	59	56	52	48	45
8	40	55.1	19	80	72	67	60	55	51	47
10	40	80.2	20	89	80	72	64	58	54	51
12	STD	109	20	94	81	70	63	57	53	50
14	30	122	20	75	61	53	47	43	40	37
16	30	150	20	73	60	52	46	42	39	36
18	STD	190	20	68	56	48	43	39	37	34
20	20	214	20	69	56	49	43	40	37	34
24	20	289	20	64	53	46	41	37	34	32
30	STD	422	20	58	47	41	37	34	31	29

REVIEWED FOR CODE COMPLIANCE
OSHPD
OPM-0043-13
BY: Jeffrey Y. Kikumoto
DATE: 06/23/2016
CALIFORNIA BUILDING CODE, 2013

NOTES:

1. **MAXIMUM BRACE SPACING IS BASED ON ASME B31E DESIGN BY ANALYSIS EQUATION. PIPE SIZE, MATERIALS, PRESSURES, ETC. NOT USED TO DETERMINE THESE TABLES MAY USE ASME B31E DESIGN BY ANALYSIS TO DETERMINE THE MAXIMUM SEISMIC BRACE SPACINGS ON A PROJECT BY PROJECT BASIS.**
2. **MAXIMUM GRAVITY SUPPORT SPACING IS BASED ON MSS SP-58 TABLE 4 LIMITED TO 20 FEET. PIPE WEIGHTS USED ARE BASED ON STANDARD SCHEDULE STEEL PIPES (40S) INCLUDING WATER AND INSULATION (REFER TO APPENDIX). PIPES WITH THICKER WALLS AND / OR FILLED WITH VAPOR OR GAS MAY USE SPACINGS AS TABULATED.**
3. **FOR LONGITUDINAL AND ALL-DIRECTIONAL BRACE SPACING, TRIPLE THE VALUES IN THE ABOVE TABLE. BRACE AND / OR CONNECTION CAPACITY MAY GOVERN MAXIMUM SPACING IN SOME CASES.**
4. **BRACE SPACINGS ARE BASED ON STEEL PIPE CONFORMING TO ASTM SPECIFICATION A53, TYPE E, GRADE B WITH MINIMUM Fy = 35 ksi AND S_A= 14.6 ksi AT MAXIMUM OPERATING PRESSURE AND TEMPERATURE OF 400psi AND 650°F, RESPECTIVELY. FOR ASTM A53, TYPE E, GRADE A WITH MINIMUM Fy=30 ksi AND S_A= 11.7 ksi, REDUCE SPACINGS BY A FACTOR OF 1.20 UP TO 14"Ø PIPE, 1.33 UP TO 30"Ø PIPE. STEEL PIPES, INCLUDING STAINLESS, WITH Fy AND S_A VALUES MEETING OR EXCEEDING ABOVE STATED MINIMUMS PER ASME B31 APPENDIX A MAY USE TABULATED SPACINGS WITH APPROPRIATE REDUCTION FACTORS, WHERE APPLICABLE.**
5. **PIPE FITTINGS AS IDENTIFIED IN ASME B31 APPENDIX D MAY INCLUDE THE FOLLOWING: LONG OR SHORT RADIUS ELBOWS, WELDING TEES, BRANCH WELD-ON FITTINGS, WELDED-IN CONTOUR FITTINGS AND CONCENTRIC REDUCERS. FOR FABRICATED TEES REDUCE SPACING BY A FACTOR OF 1.33 UP TO 12"Ø PIPE. (FABRICATED TEES ARE ACCEPTABLE FOR 14"Ø TO 30"Ø PIPE).**
6. **ACCEPTABLE PIPE CONNECTIONS INCLUDE BUTT WELDS, FILLET WELDS, THREADED JOINTS OR FLANGES AND RIGID GROOVED COUPLINGS. RIGID GROOVED COUPLINGS LISTED FOR UL STANDARD 213 MAY USE LISTED MAXIMUM BRACE SPACINGS (REF. A10.6, NOTES.)**

MASON WEST, INC.
1601 E. Miraloma Ave. Placentia, CA 92870
TEL (714) 630 - 0701, www.masonwest.com

Jiefu "Jeff" Zhang, SE
California SE No. S5270

PAGE
S1.0

PIPE	STEEL PIPE (SCHEDULE 10 & 80) WATER FILLED WITH INSULATION MAXIMUM SEISMIC BRACE SPACINGS	VERTICAL FORCE Fpv = 0.375g (ASD)

NPS	PIPE SCHEDULE OR TYPE	WT/FT	MAX GRAVITY SUPPORT SPACING (FT)	MAX TRANSVERSE BRACE SPACING BASED ON PIPE SIZE AND g FORCE (FT)						
				g FORCE						
				0.25	0.375	0.5	0.625	0.75	0.875	1
1	10	1.8	10	34	30	28	26	24	23	22
1 1/4	10	2.5	10	37	34	32	30	28	26	25
1 1/2	10	3.0	10	40	36	33	32	29	27	25
2	10	4.2	10	44	40	36	32	29	27	25
2 1/2	10	5.9	10	48	43	38	34	31	29	27
3	10	8.0	10	52	43	37	33	30	28	26
4	10	11.8	10	50	41	36	32	29	27	25
5	10	17.3	10	53	43	37	33	31	28	26
6	10	23.1	10	51	41	36	32	29	27	25
8	10	37.0	10	51	42	36	32	30	27	26
1	80	3.2	7	32	28	26	24	22	21	20
1 1/4	80	4.4	7	36	33	30	28	27	25	24
1 1/2	80	5.3	9	39	35	33	31	29	28	27
2	80	7.3	10	44	40	37	35	33	32	30
2 1/2	80	10.7	11	49	44	41	39	37	36	34
3	80	14.4	12	54	49	45	43	41	39	38
4	80	21.8	14	61	55	51	48	46	44	42
5	80	31.6	16	67	61	56	53	51	49	46
6	80	43.2	17	73	66	62	58	56	54	50
8	80	67.3	19	83	75	70	66	63	60	56
10	80	100.7	20	93	84	78	74	71	66	62
12	80	138.8	20	101	92	85	81	77	73	68

REVIEWED FOR CODE COMPLIANCE
OSHPD
OPM-0043-13
REVIEWED BY: Jeffrey Y. Kikumoto
DATE: 06/23/2016
CALIFORNIA BUILDING CODE, 2013

NOTES:

1. **MAXIMUM BRACE SPACING IS BASED ON ASME B31E DESIGN BY ANALYSIS EQUATION. PIPE SIZE, MATERIALS, PRESSURES, ETC. NOT USED TO DETERMINE THESE TABLES MAY USE ASME B31E DESIGN BY ANALYSIS TO DETERMINE THE MAXIMUM SEISMIC BRACE SPACINGS ON A PROJECT BY PROJECT BASIS.**
2. **PIPE WEIGHTS USED ARE BASED ON PIPE SCHEDULED WEIGHT INCLUDING WATER AND INSULATION (REFER TO APPENDIX). PIPES WITH THICKER WALLS AND / OR FILLED WITH VAPOR OR GAS MAY USE SPACINGS AS TABULATED.**
3. **FOR LONGITUDINAL AND ALL-DIRECTIONAL BRACE SPACING, TRIPLE THE VALUES IN THE ABOVE TABLE. BRACE AND / OR CONNECTION CAPACITY MAY GOVERN MAXIMUM SPACING IN SOME CASES.**
4. **BRACE SPACINGS ARE BASED ON STEEL PIPE CONFORMING TO ASTM SPECIFICATION A53, TYPE E, GRADE A WITH MINIMUM Fy = 30 ksi AND S_A= 11.7 ksi AT MAXIMUM OPERATING PRESSURE AND TEMPERATURE OF 400psi AND 650°F. STEEL PIPES, INCLUDING STAINLESS, WITH Fy AND S_A VALUES MEETING OR EXCEEDING ABOVE STATED MINIMUMS PER ASME B31 APPENDIX A MAY USE TABULATED SPACINGS WITH APPROPRIATE REDUCTION FACTORS, WHERE APPLICABLE.**
5. **PIPE FITTINGS AS IDENTIFIED IN ASME B31 APPENDIX D MAY INCLUDE THE FOLLOWING: LONG OR SHORT RADIUS ELBOWS, WELDING TEES, BRANCH WELD-ON FITTINGS, WELDED-IN CONTOUR FITTINGS AND CONCENTRIC REDUCERS. FOR FABRICATED TEES CALCULATE BRACE SPACINGS PER NOTE 1.**
6. **ACCEPTABLE PIPE CONNECTIONS INCLUDE BUTT WELDS, FILLET WELDS, THREADED JOINTS OR FLANGES AND RIGID GROOVED COUPLINGS. RIGID GROOVED COUPLINGS LISTED FOR UL STANDARD 213 MAY USE LISTED MAXIMUM BRACE SPACINGS (REF. A10.6, NOTES.)**

MASON WEST, INC.
1601 E. Miraloma Ave. Placentia, CA 92870
TEL (714) 630 - 0701, www.masonwest.com

Jiefu "Jeff" Zhang, SE
California SE No. S5270

PAGE
S1.1

PIPE	COPPER PIPE TYPE L - DRAWN W/ SOLDERED JOINTS MAXIMUM SEISMIC BRACE SPACINGS	VERTICAL FORCE Fpv = 0.375g (ASD)

PIPE W/WATER AND INSULATION

NPS	WT/FT	MAX GRAVITY SUPPORT SPACING (FT)	MAX TRANSVERSE BRACE SPACING BASED ON PIPE SIZE AND g FORCE (FT)						
			g FORCE						
			0.25	0.375	0.5	0.625	0.75	0.875	1
3/8	0.56	5	11	10	9	8	8	8	7
1/2	0.89	5	13	11	10	10	9	9	8
3/4	1.43	5	16	14	13	12	11	10	10
1	1.80	6	20	18	16	14	13	12	11
1 1/4	2.30	7	24	20	17	16	14	13	12
1 1/2	2.80	8	26	22	19	17	15	14	13
2	4.20	8	31	25	22	20	18	17	16
2 1/2	5.80	9	34	28	24	21	20	18	17
3	7.60	10	36	30	26	25	21	19	18
4	12.4	10	44	36	31	26	25	24	22
5	18.6	10	45	37	32	29	26	24	23
6	25.1	10	49	40	35	31	28	36	25
8	43.7	10	63	51	44	40	36	34	31
10	66.9	10	71	59	51	46	42	38	36
12	91.8	10	77	63	54	48	44	41	38
PIPE ONLY (GAS)									
3/8	0.20	6	16	14	13	12	11	11	10
1/2	0.29	6	19	16	15	14	13	12	12
3/4	0.46	7	24	21	19	17	16	16	15
1	0.66	8	28	25	22	21	20	19	18
1 1/4	0.88	9	32	28	26	24	23	21	20
1 1/2	1.14	10	35	31	29	27	25	24	23
2	1.75	10	40	36	33	32	30	27	25
2 1/2	2.48	10	44	40	37	35	33	30	28
3	3.33	10	48	44	41	38	35	33	31
4	5.38	10	56	50	47	44	42	39	36
5	7.61	10	62	56	52	48	44	41	38
6	10.2	10	68	61	57	52	47	44	41
8	19.3	10	78	70	65	62	57	52	49
10	30.1	10	87	79	73	69	64	59	55
12	40.4	10	95	86	80	75	68	63	59

REVIEWED FOR CODE COMPLIANCE
OPM-0043-13
BY: Jeffrey Y. Kikumoto
DATE: 06/23/2016
CALIFORNIA BUILDING CODE 2013

NOTES:

1. **MAXIMUM BRACE SPACING IS BASED ON ASME B31E DESIGN BY ANALYSIS. PIPE SIZE, MATERIALS, PRESSURES, ETC. NOT USED TO DETERMINE THESE TABLES MAY USE ASME B31E DESIGN BY ANALYSIS TO DETERMINE THE MAXIMUM SEISMIC BRACE SPACINGS ON A PROJECT BY PROJECT BASIS.**
2. **MAXIMUM GRAVITY SPACING IS BASED ON MSS SP-58 TABLE 4, LIMITED TO 10 FEET.**
3. **FOR LONGITUDINAL AND ALL-DIRECTIONAL BRACE SPACING, TRIPLE THE VALUES IN THE ABOVE TABLE. BRACE AND OR CONNECTION CAPACITY MAY GOVERN MAXIMUM SPACINGS IN SOME CASES.**
4. **BRACE SPACINGS ARE BASED ON PIPE CONFORMING TO ASTM SPECIFICATION B88 TYPE L DRAWN COPPER PIPE WITH SOLDERED JOINTS AND MAXIMUM OPERATING PRESSURE AND TEMPERATURE OF 100 PSI AND 250°F, RESPECTIVELY. TYPE L DRAWN COPPER PIPE WITH BRAZED JOINTS MAY USE THESE CHARTS IF THEY OCCUR WITHIN 6" OF A GRAVITY SUPPORT. FOR CASES WHERE THE DISTANCE FROM A BRAZED JOINT TO A GRAVITY SUPPORT EXCEEDS 6", REFER TO SEISMIC BRACE SPACINGS FOR ANNEALED TYPE L COPPER PIPE ON PAGE S1.2.2.**

MASON WEST, INC.
1601 E. Miraloma Ave. Placentia, CA 92870
TEL (714) 630 - 0701, www.masonwest.com

Jiefu "Jeff" Zhang, SE
California SE No. S5270

PAGE
S1.2.1

PIPE	COPPER PIPE TYPE L - ANNEALED MAXIMUM SEISMIC BRACE SPACINGS	VERTICAL FORCE Fpv = 0.375g (ASD)

PIPE W/WATER AND INSULATION

NPS	WT/FT	MAX GRAVITY SUPPORT SPACING (FT)	MAX TRANSVERSE BRACE SPACING BASED ON PIPE SIZE AND g FORCE (FT)						
			g FORCE						
			0.25	0.375	0.5	0.625	0.75	0.875	1
3/8	0.56	5	6	5	4	4	3	3	3
1/2	0.89	5	7	6	5	5	4	4	4
3/4	1.43	5	10	8	7	6	6	5	5
1	1.80	6	11	9	8	7	6	6	6
1 1/4	2.30	7	11	9	8	7	6	6	6
1 1/2	2.80	8	11	9	8	7	6	6	6
2	4.20	8	15	13	11	10	9	8	8
2 1/2	5.80	9	16	13	12	10	9	9	8
3	7.60	10	17	14	12	11	10	9	9
4	12.4	10	24	19	17	15	14	13	12
5	18.6	10	25	20	17	16	14	13	12
6	25.1	10	27	22	19	17	16	15	14
8	43.7	10	38	31	27	24	22	20	19
10	66.9	10	45	36	32	28	26	24	22
12	91.8	10	48	39	34	30	28	26	24
PIPE ONLY (GAS)									
3/8	0.20	6	16	14	12	11	10	9	8
1/2	0.29	6	19	16	14	12	11	10	10
3/4	0.46	7	22	18	15	14	13	12	11
1	0.66	8	23	19	16	15	13	12	12
1 1/4	0.88	9	24	20	17	15	14	13	12
1 1/2	1.14	10	25	20	18	16	14	13	12
2	1.75	10	29	24	21	19	17	16	15
2 1/2	2.48	10	33	27	24	21	19	18	17
3	3.33	10	37	30	26	23	21	20	18
4	5.38	10	45	37	32	28	26	24	22
5	7.61	10	48	39	34	30	27	25	24
6	10.2	10	52	42	36	33	30	28	26
8	19.3	10	63	51	45	40	36	34	31
10	30.1	10	71	58	50	45	41	38	36
12	40.4	10	77	63	54	49	44	41	38

REVIEWED FOR CODE COMPLIANCE
CALIFORNIA BUILDING CODE, 2013
OPM-0043-13
BY: Jeffrey Y. Kikumoto
DATE: 06/23/2016

NOTES:

1. MAXIMUM BRACE SPACING IS BASED ON ASME B31E DESIGN BY ANALYSIS. PIPE SIZE, MATERIALS, PRESSURES, ETC. NOT USED TO DETERMINE THESE TABLES MAY USE ASME B31E DESIGN BY ANALYSIS TO DETERMINE THE MAXIMUM SEISMIC BRACE SPACINGS ON A PROJECT BY PROJECT BASIS.
2. MAXIMUM GRAVITY SPACING IS BASED ON MSS SP-58 TABLE 4, LIMITED TO 10 FEET.
3. FOR LONGITUDINAL AND ALL-DIRECTIONAL BRACE SPACING, TRIPLE THE VALUES IN THE ABOVE TABLE. BRACE AND OR CONNECTION CAPACITY MAY GOVERN MAXIMUM SPACINGS IN SOME CASES.
4. BRACE SPACINGS ARE BASED ON PIPE CONFORMING TO ASTM SPECIFICATION B88 TYPE L ANNEALED COPPER PIPE WITH A MAXIMUM OPERATING PRESSURE AND TEMPERATURE OF 100 PSI AND 250°F, RESPECTIVELY.

MASON WEST, INC.
1601 E. Miraloma Ave. Placentia, CA 92870
TEL (714) 630 - 0701, www.masonwest.com

Jiefu "Jeff" Zhang, SE
California SE No. S5270

PAGE
S1.2.2

PIPE	COPPER PIPE TYPE K - DRAWN W/ SOLDERED JOINTS MAXIMUM SEISMIC BRACE SPACINGS	VERTICAL FORCE Fpv = 0.375g(ASD)

PIPE W/WATER AND INSULATION

NPS	WT/FT	MAX GRAVITY SUPPORT SPACING (FT)	MAX TRANSVERSE BRACE SPACING BASED ON PIPE SIZE AND g FORCE (FT)						
			g FORCE						
			0.25	0.375	0.5	0.625	0.75	0.875	1
3/8	0.62	5	12	10	10	9	8	8	8
1/2	0.89	5	14	12	11	10	9	9	9
3/4	1.43	5	18	16	14	13	12	12	11
1	1.80	6	22	19	17	16	15	14	14
1 1/4	2.30	7	25	22	20	18	17	16	15
1 1/2	2.80	8	28	25	23	21	19	17	16
2	4.20	8	33	30	26	24	22	20	19
2 1/2	5.80	9	37	33	29	26	24	22	20
3	7.60	10	41	37	32	28	26	24	23
4	12.4	10	47	42	37	33	30	28	26
5	18.6	10	52	47	41	37	33	31	29
6	25.1	10	58	52	47	42	38	36	33
8	43.7	10	68	61	57	53	48	44	42
10	66.9	10	76	69	64	60	54	50	47
12	91.8	10	84	76	71	67	61	57	53
PIPE ONLY (GAS)									
3/8	0.27	6	16	14	13	12	11	10	10
1/2	0.34	6	19	16	15	14	13	12	12
3/4	0.64	7	23	20	19	17	16	15	15
1	0.84	8	28	24	22	21	19	18	18
1 1/4	1.04	9	32	28	26	24	22	21	20
1 1/2	1.36	10	34	31	29	27	25	24	23
2	2.06	10	40	36	33	31	30	29	27
2 1/2	2.93	10	44	40	37	35	33	32	30
3	4.00	10	48	43	40	38	37	35	33
4	6.51	10	55	50	46	44	42	40	38
5	9.67	10	62	56	52	49	47	45	42
6	13.9	10	67	61	57	54	51	49	46
8	25.9	10	78	70	65	62	59	57	55
10	40.3	10	87	78	73	69	66	63	61
12	57.8	10	95	86	80	75	72	69	67

REVIEWED FOR CODE COMPLIANCE
OPM-0043-13
By: Jeffrey Y. Kikumoto
DATE: 06/23/2016
CALIFORNIA BUILDING CODE, 2013

NOTES:

1. **MAXIMUM BRACE SPACING IS BASED ON ASME B31E DESIGN BY ANALYSIS. PIPE SIZE, MATERIALS, PRESSURES, ETC. NOT USED TO DETERMINE THESE TABLES MAY USE ASME B31E DESIGN BY ANALYSIS TO DETERMINE THE MAXIMUM SEISMIC BRACE SPACINGS ON A PROJECT BY PROJECT BASIS.**
2. **MAXIMUM GRAVITY SPACING IS BASED ON MSS SP-58 TABLE 4. LIMITED TO 10 FEET.**
3. **FOR LONGITUDINAL AND ALL-DIRECTIONAL BRACE SPACING, TRIPLE THE VALUES IN THE ABOVE TABLE. BRACE AND OR CONNECTION CAPACITY MAY GOVERN MAXIMUM SPACINGS IN SOME CASES.**
4. **BRACE SPACINGS ARE BASED ON PIPE CONFORMING TO ASTM SPECIFICATION B88 TYPE K DRAWN COPPER PIPE WITH SOLDERED JOINTS AND MAXIMUM OPERATING PRESSURE AND TEMPERATURE OF 100 PSI AND 250°F, RESPECTIVELY. TYPE L DRAWN COPPER PIPE WITH BRAZED JOINTS MAY USE THESE CHARTS IF THEY OCCUR WITHIN 6" OF A GRAVITY SUPPORT. FOR CASES WHERE THE DISTANCE FROM A BRAZED JOINT TO A GRAVITY SUPPORT EXCEEDS 6", REFER TO SEISMIC BRACE SPACINGS FOR ANNEALED TYPE L COPPER PIPE ON PAGE S1.3.2.**

MASON WEST, INC.
1601 E. Miraloma Ave. Placentia, CA 92870
TEL (714) 630 - 0701, www.masonwest.com

Jiefu "Jeff" Zhang, SE
California SE No. S5270

PAGE
S1.3.1

PIPE	COPPER PIPE TYPE K - ANNEALED MAXIMUM SEISMIC BRACE SPACINGS	VERTICAL FORCE Fpv = 0.375g(ASD)

PIPE W/WATER AND INSULATION

NPS	WT/FT	MAX GRAVITY SUPPORT SPACING (FT)	MAX TRANSVERSE BRACE SPACING BASED ON PIPE SIZE AND g FORCE (FT)						
			g FORCE						
			0.25	0.375	0.5	0.625	0.75	0.875	1
3/8	0.62	5	7	6	5	4	4	4	4
1/2	0.89	5	10	8	7	6	6	5	5
3/4	1.43	5	15	13	11	10	9	8	8
1	1.80	6	17	14	12	11	10	9	9
1 1/4	2.30	7	16	13	11	10	9	8	8
1 1/2	2.80	8	17	14	12	11	10	9	9
2	4.20	8	21	17	15	13	12	11	10
2 1/2	5.80	9	23	18	16	14	13	12	11
3	7.60	10	25	20	17	16	14	13	12
4	12.4	10	30	25	21	19	17	16	15
5	18.6	10	35	28	25	22	20	19	17
6	25.1	10	41	34	29	26	24	22	21
8	43.7	10	53	43	37	33	31	28	26
10	66.9	10	61	50	43	38	35	32	30
12	91.8	10	69	56	49	44	40	37	35
PIPE ONLY (GAS)									
3/8	0.27	6	15	13	11	10	9	8	8
1/2	0.34	6	19	16	14	13	12	11	10
3/4	0.64	7	23	20	17	15	14	13	12
1	0.84	8	27	22	19	17	15	14	13
1 1/4	1.04	9	27	22	19	17	15	14	13
1 1/2	1.36	10	28	23	20	18	16	15	14
2	2.06	10	32	27	23	21	19	17	16
2 1/2	2.93	10	37	30	26	23	21	20	18
3	4.00	10	41	33	29	26	23	22	20
4	6.51	10	47	39	33	30	27	25	24
5	9.67	10	53	43	38	34	31	28	27
6	13.9	10	59	48	42	37	34	32	30
8	25.9	10	71	58	50	45	41	38	36
10	40.3	10	81	66	57	51	47	43	40
12	57.8	10	89	73	63	56	51	48	44

REVIEWED FOR CODE COMPLIANCE
OSHPD
OPM-0043-13
By: Jeffrey Y. Kikumoto
DATE: 06/23/2016
CALIFORNIA BUILDING CODE 2013

NOTES:

1. **MAXIMUM BRACE SPACING IS BASED ON ASME B31E DESIGN BY ANALYSIS. PIPE SIZE, MATERIALS, PRESSURES, ETC. NOT USED TO DETERMINE THESE TABLES MAY USE ASME B31E DESIGN BY ANALYSIS TO DETERMINE THE MAXIMUM SEISMIC BRACE SPACINGS ON A PROJECT BY PROJECT BASIS.**
2. **MAXIMUM GRAVITY SPACING IS BASED ON MSS SP-58 TABLE 4. LIMITED TO 10 FEET.**
3. **FOR LONGITUDINAL AND ALL-DIRECTIONAL BRACE SPACING, TRIPLE THE VALUES IN THE ABOVE TABLE. BRACE AND OR CONNECTION CAPACITY MAY GOVERN MAXIMUM SPACINGS IN SOME CASES.**
4. **BRACE SPACINGS ARE BASED ON PIPE CONFORMING TO ASTM SPECIFICATION B88 TYPE K ANNEALED COPPER PIPE WITH A MAXIMUM OPERATING PRESSURE AND TEMPERATURE OF 100 PSI AND 250°F, RESPECTIVELY.**

MASON WEST, INC.
1601 E. Miraloma Ave. Placentia, CA 92870
TEL (714) 630 - 0701, www.masonwest.com

Jiefu "Jeff" Zhang, SE
California SE No. S5270

PAGE
S1.3.2

PIPE	CAST IRON SOIL PIPE FILLED WITH WATER MAXIMUM SEISMIC BRACE SPACINGS	VERTICAL FORCE Fpv = 0.375g (ASD)

NPS	MAX WEIGHT PER FOOT (LBS/FT)	MAX GRAVITY SUPPORT SPACING [2] (FT)	MAX TRANSVERSE BRACE SPACING BASED ON PIPE SIZE AND g FORCE (FT)					MAX LONGITUDINAL BRACE SPACING BASED ON PIPE SIZE AND g FORCE (FT)				
			g FORCE					g FORCE				
			0.25	0.375	0.5	0.75	1	0.25	0.375	0.5	0.75	1
3	8.4	8	22	18	16	13	11	40	36	32	22	17
4	13.0	8	25	21	18	14	10	40	40	36	26	19
5	18.0	8	26	21	18	12	10	40	40	40	29	22
6	23.4	8	26	21	17	11	10	40	40	40	29	22
8	40.2	8	26	18	13	10	10	40	33	25	17	13
10	60.8	8	22	15	11	10	10	31	21	16	10	10
12	82.1	8	10	10	10	10	10	10	10	10	10	10

NOTES:

1. **MAXIMUM BRACE SPACING IS BASED ON ASTM C1540, FM 1680 CLASS I, AND ASCE 7-10 SECTION 13.6.8, NOTE c, 10 PERCENT OF THE MATERIAL MINIMUM SPECIFIED TENSILE STRENGTH FOR CAST IRON.**
2. **MAXIMUM GRAVITY SPACING IS BASED ON SUPPORT OF STANDARD 10 FOOT MAXIMUM PIPE LENGTH SEGMENTS SUPPORTED WITHIN 18 INCHES IN EACH DIRECTION FROM JOINT CONNECTION. TRIBUTARY LENGTH FOR EACH SUPPORT SHALL NOT EXCEED 5 FEET OF PIPE FULL OF WATER. PIPE WEIGHTS CONSIDERED FULL OF WATER (REFER TO APPENDIX).**
3. **BRACE SPACING SHALL BE 10 FEET MINIMUM AND 40 FEET MAXIMUM. BRACE AND OR CONNECTION CAPACITY MAY GOVERN MAXIMUM SPACING IN SOME CASES.**
4. **BRACE SPACINGS ARE BASED ON CAST IRON PIPE CONSTRUCTED TO ASTM A 888 OR CISPI 301 STANDARDS WITH A MINIMUM TENSILE STRENGTH OF 21,000 PSI.**
5. **CAST IRON PIPE (NO-HUB PIPE) BRACE SPACINGS SHALL NOT EXCEED THE TABULATED SPACINGS. NO-HUB COUPLINGS SHALL BE MANUFACTURED IN ACCORDANCE WITH ASTM C1540, SHALL BE CERTIFIED IN ACCORDANCE WITH FM 1680 CLASS I, AND GRAVITY HANGERS SHALL BE SPACED PER THE REQUIREMENTS OF TABLE 313.1 OF THE 2013 CALFORNIA PLUMBING CODE (CPC 2013) FOR NO-HUB CAST IRON PIPE.**

APPROVED FOR CODE COMPLIANCE
BY: Jeffrey Y. Kikumoto
DATE: 06/23/2016
CALIFORNIA BUILDING CODE, 2013

MASON WEST, INC.
1601 E. Miraloma Ave. Placentia, CA 92870
TEL (714) 630 - 0701, www.masonwest.com

Jiefu "Jeff" Zhang, SE
California SE No. S5270

PAGE
S1.4

PIPE	CAST IRON SOIL PIPE FOR EMPTY SYSTEMS (NO WATER) MAXIMUM SEISMIC BRACE SPACINGS	VERTICAL FORCE Fpv = 0.375g (ASD)

NPS	MAX WEIGHT PER FOOT (LBS/FT)	MAX GRAVITY SUPPORT SPACING [2] (FT)	MAX TRANSVERSE BRACE SPACING BASED ON PIPE SIZE AND g FORCE (FT)					MAX LONGITUDINAL BRACE SPACING BASED ON PIPE SIZE AND g FORCE (FT)				
			g FORCE					g FORCE				
			0.25	0.375	0.5	0.75	1	0.25	0.375	0.5	0.75	1
3	5.2	8	22	18	16	13	11	40	36	32	26	22
4	7.4	8	25	21	18	15	13	40	40	36	30	26
5	9.4	8	28	23	20	16	14	40	40	40	32	28
6	11.0	8	30	24	21	17	15	40	40	40	34	30
8	18.0	8	35	32	25	20	15	40	40	40	37	28
10	25.8	8	40	34	26	17	13	40	40	37	24	18
12	32.5	8	10	10	10	10	10	10	10	10	10	10

NOTES:

1. MAXIMUM BRACE SPACING IS BASED ON ASTM C1540, FM 1680 CLASS I, AND ASCE 7-10 SECTION 13.6.8, NOTE c, 10 PERCENT OF THE MATERIAL MINIMUM SPECIFIED TENSILE STRENGTH FOR CAST IRON.
2. MAXIMUM GRAVITY SPACING IS BASED ON SUPPORT OF STANDARD 10 FOOT MAXIMUM PIPE LENGTH SEGMENTS SUPPORTED WITHIN 18 INCHES IN EACH DIRECTION FROM JOINT CONNECTION. TRIBUTARY LENGTH FOR EACH SUPPORT SHALL NOT EXCEED 5 FEET OF PIPE. PIPE WEIGHTS CONSIDERED EMPTY (REFER TO APPENDIX).
3. BRACE SPACING SHALL BE 10 FEET MINIMUM AND 40 FEET MAXIMUM. BRACE AND OR CONNECTION CAPACITY MAY GOVERN MAXIMUM SPACING IN SOME CASES.
4. BRACE SPACINGS ARE BASED ON CAST IRON PIPE CONSTRUCTED TO ASTM A 888 OR CISPI 301 STANDARDS WITH A MINIMUM TENSILE STRENGTH OF 21,000 PSI.
5. CAST IRON PIPE (NO-HUB PIPE) BRACE SPACINGS SHALL NOT EXCEED THE TABULATED SPACINGS. NO-HUB COUPLINGS SHALL BE MANUFACTURED IN ACCORDANCE WITH ASTM C1540, SHALL BE CERTIFIED IN ACCORDANCE WITH FM 1680 CLASS I, AND GRAVITY HANGERS SHALL BE SPACED PER THE REQUIREMENTS OF TABLE 313.1 OF THE 2013 CALFORNIA PLUMBING CODE (CPC 2013) FOR NO-HUB CAST IRON PIPE.

CHECKED FOR CODE COMPLIANCE
BY: Jeffrey Y. Kikumoto
DATE: 06/23/2016
2013 CALIFORNIA BUILDING CODE

MASON WEST, INC.
1601 E. Miraloma Ave. Placentia, CA 92870
TEL (714) 630 - 0701, www.masonwest.com

Jiefu "Jeff" Zhang, SE
California SE No. S5270

PAGE
S1.5

THIS PAGE INTENTIONALLY LEFT BLANK.

MASON WEST, INC.
1601 E. Miraloma Ave. Placentia, CA 92870
TEL (714) 630 - 0701, www.masonwest.com

Jiefu "Jeff" Zhang, SE
California SE No. S5270

PAGE
S2.0

CONDUIT	INTERMEDIATE METAL CONDUIT (IMC) MAXIMUM SEISMIC BRACE SPACINGS	VERTICAL FORCE Fpv = 0.375g (ASD)

TRADE SIZE	MAX WEIGHT PER FOOT (LBS/FT)	MAX GRAVITY SUPPORT SPACING (FT)	MAX TRANSVERSE BRACE SPACING BASED ON TRADE SIZE AND g FORCE (FT)						
			g FORCE						
			0.25	0.375	0.5	0.625	0.75	0.875	1
1/2	0.77	10	26	22	20	19	18	17	16
3/4	1.10	10	29	26	23	22	20	19	19
1	1.61	12	33	30	27	25	24	23	22
1 1/4	2.29	14	37	33	31	29	27	26	25
1 1/2	2.9	14	39	36	33	31	30	28	27
2	4.1	16	43	39	37	35	33	32	31
2 1/2	6.3	16	49	44	41	39	37	36	35
3	8.9	20	53	47	44	42	40	38	37
3.5	10.9	20	55	50	47	44	42	40	39
4	12.9	20	58	53	49	46	44	42	41

NOTES:

1. MAXIMUM BRACE SPACING IS BASED ON ASCE 7-10 SECTION 13.6.8, NOTE b, 70 PERCENT OF THE MATERIAL MINIMUM SPECIFIED TENSILE STRENGTH FOR STEEL TUBING WITH THREADED CONNECTIONS.
2. IMC CONSIDERED FULL OF WATER WHEN DETERMINING WEIGHT (REFER TO APPENDIX).
3. FOR LONGITUDINAL AND ALL-DIRECTIONAL BRACE SPACING, MULTIPLY THE TABULATED VALUES BY 3. BRACE AND OR CONNECTION CAPACITY MAY GOVERN MAXIMUM SPACING IN SOME CASES.
4. BRACE SPACINGS ARE BASED ON IMC STEEL TUBING CONSTRUCTED TO UL-1242 OR ANSI C-80.6 WITH A MINIMUM YIELD STRENGTH OF 30,000 PSI.
5. COUPLINGS CONNECTING IMC SEGMENTS SHALL BE DESIGNED OR TESTED TO ACCEPT SEISMIC LOADS, WHEN THREADED COUPLINGS ARE NOT USED, AND MAY LIMIT THE BRACE SPACINGS TO MANUFACTURER'S RATINGS. MANUFACTURER'S RATINGS MUST BE BASED ON REVIEWED CAPACITIES AND APPROVED BY OSHPD.
6. RIGID GROOVED COUPLINGS LISTED FOR UL STANDARD 213 MAY USE LISTED MAXIMUM BRACE SPACINGS.

REVIEWED FOR CODE COMPLIANCE
OSHPD
OPM-0043-13
BY: Jeffrey T. Kikumoto
DATE: 06/23/2016
CALIFORNIA BUILDING CODE, 2013

MASON WEST, INC.
1601 E. Miraloma Ave. Placentia, CA 92870
TEL (714) 630 - 0701, www.masonwest.com

Jiefu "Jeff" Zhang, SE
California SE No. S5270

PAGE
S2.1

CONDUIT	RIGID METAL CONDUIT (RMC) MAXIMUM SEISMIC BRACE SPACINGS	VERTICAL FORCE Fpv = 0.375g (ASD)

TRADE SIZE	MAX WEIGHT PER FOOT (LBS/FT)	MAX GRAVITY SUPPORT SPACING (FT)	MAX TRANSVERSE BRACE SPACING BASED ON TRADE SIZE AND g FORCE (FT)						
			g FORCE						
			0.25	0.375	0.5	0.625	0.75	0.875	1
1/2	0.96	10	26	23	21	19	18	17	17
3/4	1.33	10	30	26	24	22	21	20	19
1	2.0	12	34	31	28	26	24	23	22
1 1/4	2.8	14	38	34	32	30	28	27	26
1 1/2	3.5	14	40	36	34	32	31	29	28
2	5.0	16	45	40	38	36	34	33	32
2 1/2	7.7	16	49	45	42	39	38	36	35
3	10.5	20	54	49	45	43	41	40	38
3.5	13.1	20	57	52	48	46	44	42	41
4	15.9	20	61	55	51	48	46	44	43
5	22.8	20	67	60	56	53	51	49	47
6	31.0	20	72	65	61	57	55	53	51

NOTES:

1. **MAXIMUM BRACE SPACING IS BASED ON ASCE 7-10 SECTION 13.6.8, NOTE b, 70 PERCENT OF THE MATERIAL MINIMUM SPECIFIED TENSILE STRENGTH FOR STEEL TUBING WITH THREADED CONNECTIONS.**
2. **RMC CONSIDERED FULL OF WATER WHEN DETERMINING WEIGHT (REFER TO APPENDIX).**
3. **FOR LONGITUDINAL AND ALL-DIRECTIONAL BRACE SPACING, MULTIPLY THE TABULATED VALUES BY 3. BRACE AND OR CONNECTION CAPACITY MAY GOVERN MAXIMUM SPACING IN SOME CASES.**
4. **BRACE SPACINGS ARE BASED ON RMC STEEL TUBING CONSTRUCTED TO UL-6 OR ANSI C-80.1 WITH A MINIMUM YIELD STRENGTH OF 30,000 PSI.**
5. **COUPLINGS CONNECTING RMC SEGMENTS SHALL BE DESIGNED OR TESTED TO ACCEPT SEISMIC LOADS, WHEN THREADED COUPLINGS ARE NOT USED, AND MAY LIMIT THE BRACE SPACINGS TO MANUFACTURER'S RATINGS. MANUFACTURER'S RATINGS MUST BE BASED ON REVIEWED CAPACITIES AND APPROVED BY OSHPD.**
6. **RIGID GROOVED COUPLINGS LISTED FOR UL STANDARD 213 MAY USE LISTED MAXIMUM BRACE SPACINGS.**

REVIEWED FOR CODE COMPLIANCE OSHPD OPM-0043-13 BUILDING

MASON WEST, INC.
1601 E. Miraloma Ave. Placentia, CA 92870
TEL (714) 630 - 0701, www.masonwest.com

Jiefu "Jeff" Zhang, SE
California SE No. S5270

PAGE
S2.2

PIPE	STEEL PIPE (STANDARD SCHEDULE) WATER FILLED WITH INSULATION MAXIMUM MW-SSC SPACINGS	VERTICAL FORCE Fpv = 0.375g (ASD)

MAX PIPE CLAMP SPACING (TOP OF TRAPEZE INSTALLATION)

PART #	NPS	PIPE SCHEDULE	MAX WEIGHT PER FOOT (LBS/FT)	MAX GRAVITY SUPPORT SPACING (FT)	MAX TRANSVERSE SPACING (FT) g FORCE							MAX LONGITUDINAL SPACING (FT) g FORCE						
					0.25	0.375	0.5	0.625	0.75	0.875	1	0.25	0.375	0.5	0.625	0.75	0.875	1
SSC-10	1	40	2.8	7	31	28	25	23	22	21	20	94	67	50	40	33	29	25
SSC-13	1 1/4	40	3.8	7	35	32	30	28	26	24	21	106	96	84	67	56	48	42
SSC-15	1 1/2	40	4.5	9	38	35	32	30	27	23	20	115	77	58	46	39	33	29
SSC-20	2	40	6.2	10	43	39	36	34	28	24	21	128	116	94	75	62	53	47
SSC-25	2 1/2	40	9.1	10	48	43	37	30	25	21	19	143	97	73	58	48	41	36
SSC-30	3	40	12.1	10	53	44	33	26	22	19	17	119	79	60	48	40	34	30
SSC-40	4	40	18.3	10	57	38	28	23	19	16	14	63	42	32	25	21	18	16
SSC-50	5	40	26.6	10	56	37	28	22	19	16	14	71	47	35	28	24	20	18
SSC-60	6	40	34.8	10	40	27	20	16	13	11	10	52	34	26	21	17	15	13
SSC-80	8	40	55.1	10	23	15	12	9	8	7	6	23	15	11	9	8	6	6

MAX PIPE CLAMP SPACING (BOTTOM OF TRAPEZE INSTALLATION)

PART #	NPS	PIPE SCHEDULE	MAX WEIGHT PER FOOT (LBS/FT)	MAX GRAVITY SUPPORT SPACING (FT)	MAX TRANSVERSE SPACING (FT) g FORCE							MAX LONGITUDINAL SPACING (FT) g FORCE						
					0.25	0.375	0.5	0.625	0.75	0.875	1	0.25	0.375	0.5	0.625	0.75	0.875	1
SSC-10	1	40	2.8	7	31	28	25	23	22	21	20	94	67	50	40	33	29	25
SSC-13	1 1/4	40	3.8	7	35	32	30	28	25	21	18	106	96	84	67	56	48	42
SSC-15	1 1/2	40	4.5	9	38	35	32	28	24	20	18	115	77	58	46	39	33	29
SSC-20	2	40	6.2	10	43	39	36	34	28	24	21	128	116	90	72	60	52	45
SSC-25	2 1/2	40	9.1	10	48	43	35	28	23	20	18	136	91	68	55	45	39	34
SSC-30	3	40	12.1	10	53	42	31	25	21	18	16	109	73	55	44	36	31	27
SSC-40	4	40	18.3	10	55	36	27	22	18	16	14	57	38	28	23	19	16	14
SSC-50	5	40	26.6	10	50	33	25	20	17	14	12	65	43	32	26	22	18	16
SSC-60	6	40	34.8	10	34	23	17	14	11	10	9	43	28	21	17	14	12	11

OSHPD
OPM-0043-13
REVIEWED FOR CODE COMPLIANCE
BY: Jeffrey Kikumoto
DATE: 06/23/2016
CALIFORNIA BUILDING CODE

NOTES:

1. MAXIMUM MW-SSC SPACINGS ARE THE MINIMUMS OF VALUES TAKEN FROM S1.0 AND MW-SSC CAPACITIES FOR THEIR RESPECTIVE PIPE SIZE AND g FORCE.
2. BRACE CAPACITY MAY GOVERN MAXIMUM SPACING IN SOME CASES.
3. REF. X8.0-X8.0.1 FOR MW-SSC DATA.
4. FOR MULTIPLE PIPES SUPPORTED ON A TRAPEZE, REFER TO PAGE A10.6, NOTE 3.

MASON WEST, INC.
1601 E. Miraloma Ave. Placentia, CA 92870
TEL (714) 630 - 0701, www.masonwest.com

Jiefu "Jeff" Zhang, SE
California SE No. S5270

PAGE
S3.0

PIPE	COPPER PIPE TYPE L - DRAWN W/ SOLDERED JOINTS MAX MW-SCC SPACINGS	VERTICAL FORCE Fpv = 0.375g (ASD)

PIPE W/WATER AND INSULATION

MAX PIPE CLAMP SPACING (TOP OF TRAPEZE INSTALLATION)																		
				MAX TRANSVERSE SPACING (FT)							MAX LONGITUDINAL SPACING (FT)						
				g FORCE							g FORCE						
PART #	NPS	MAX WEIGHT PER FOOT (LBS/FT)	MAX GRAVITY SUPPORT SPACING (FT)	0.25	0.375	0.5	0.625	0.75	0.875	1	0.25	0.375	0.5	0.625	0.75	0.875	1
SCC-13	1 1/4	2.30	7	24	20	17	16	14	13	12	71	60	52	47	43	39	37
SCC-15	1 1/2	2.80	8	26	22	19	17	15	14	13	79	65	56	50	46	42	40
SCC-20	2	4.20	8	31	25	22	20	18	17	16	93	76	57	46	38	33	29
SCC-25	2 1/2	5.80	9	34	28	24	21	18	16	14	83	55	41	33	28	24	21
SCC-30	3	7.60	10	36	28	21	17	14	12	11	84	56	42	34	28	24	21
SCC-40	4	12.4	10	44	32	24	19	16	14	12	61	41	31	25	20	18	15
SCC-50	5	18.6	10	39	26	19	15	13	11	10	41	27	20	16	14	12	10
SCC-60	6	25.1	10	32	21	16	13	11	9	8	25	17	13	10	8	7	6

PIPE ONLY (GAS)

MAX PIPE CLAMP SPACING (TOP OF TRAPEZE INSTALLATION)																		
				MAX TRANSVERSE SPACING (FT)							MAX LONGITUDINAL SPACING (FT)						
				g FORCE							g FORCE						
PART #	NPS	MAX WEIGHT PER FOOT (LBS/FT)	MAX GRAVITY SUPPORT SPACING (FT)	0.25	0.375	0.5	0.625	0.75	0.875	1	0.25	0.375	0.5	0.625	0.75	0.875	1
SCC-13	1 1/4	0.88	9	32	28	26	24	23	21	20	95	85	77	72	68	64	61
SCC-15	1 1/2	1.14	10	35	31	29	27	25	24	23	104	94	87	80	76	72	68
SCC-20	2	1.75	10	40	36	33	32	30	27	26	119	108	100	95	89	78	69
SCC-25	2 1/2	2.48	10	44	40	37	35	33	30	28	132	120	97	77	65	55	48
SCC-30	3	3.33	10	48	44	41	38	32	27	24	145	128	96	77	64	55	48
SCC-40	4	5.38	10	56	50	47	44	37	32	28	141	94	71	57	47	40	35
SCC-50	5	7.61	10	62	56	47	38	32	27	24	100	67	50	40	33	29	25
SCC-60	6	10.2	10	68	52	39	31	26	22	20	63	42	31	25	21	18	16

VERIFIED FOR CODE COMPLIANCE
BY: Jeffrey K. Kikumoto
DATE: 06/23/2016
CALIFORNIA BUILDING CODE, 2013

NOTES:

1. MAXIMUM MW-SCC SPACINGS ARE THE MINIMUMS OF VALUES TAKEN FROM S1.2.1 AND MW-SCC CAPACITIES FOR THEIR RESPECTIVE PIPE SIZE AND g FORCE.
2. BRACE CAPACITY MAY GOVERN MAXIMUM SPACING IN SOME CASES.
3. REF. X8.1-X8.1.1 FOR MW-SCC DATA.
4. FOR MULTIPLE PIPES SUPPORTED ON A TRAPEZE, REFER TO PAGE A10.6, NOTE 3.

MASON WEST, INC.
1601 E. Miraloma Ave. Placentia, CA 92870
TEL (714) 630 - 0701, www.masonwest.com

Jiefu "Jeff" Zhang, SE
California SE No. S5270

PAGE
S3.1

PIPE	COPPER PIPE TYPE L - ANNEALED MAX MW-SCC SPACINGS	VERTICAL FORCE Fpv = 0.375g (ASD)

PIPE W/WATER AND INSULATION

MAX PIPE CLAMP SPACING (TOP OF TRAPEZE INSTALLATION)																		
				MAX TRANSVERSE SPACING (FT)							MAX LONGITUDINAL SPACING (FT)						
				g FORCE							g FORCE						
PART #	NPS	MAX WEIGHT PER FOOT (LBS/FT)	MAX GRAVITY SUPPORT SPACING (FT)	0.25	0.375	0.5	0.625	0.75	0.875	1	0.25	0.375	0.5	0.625	0.75	0.875	1
SCC-13	1 1/4	2.30	7	11	9	8	7	6	6	6	34	28	24	21	19	18	17
SCC-15	1 1/2	2.80	8	11	9	8	7	6	6	6	33	27	23	21	19	18	17
SCC-20	2	4.20	8	15	13	11	10	9	8	8	46	38	33	29	27	25	23
SCC-25	2 1/2	5.80	9	16	13	12	10	9	9	8	49	40	35	31	28	24	21
SCC-30	3	7.60	10	17	14	12	11	10	9	9	51	42	36	32	28	24	21
SCC-40	4	12.4	10	24	19	17	15	14	13	12	61	41	31	25	20	18	15
SCC-50	5	18.6	10	25	20	17	15	13	11	10	41	27	20	16	14	12	10
SCC-60	6	25.1	10	27	21	16	13	11	9	8	25	17	13	10	8	7	6

PIPE ONLY (GAS)

MAX PIPE CLAMP SPACING (TOP OF TRAPEZE INSTALLATION)																		
				MAX TRANSVERSE SPACING (FT)							MAX LONGITUDINAL SPACING (FT)						
				g FORCE							g FORCE						
PART #	NPS	MAX WEIGHT PER FOOT (LBS/FT)	MAX GRAVITY SUPPORT SPACING (FT)	0.25	0.375	0.5	0.625	0.75	0.875	1	0.25	0.375	0.5	0.625	0.75	0.875	1
SCC-13	1 1/4	0.88	9	24	20	17	15	14	13	12	73	59	51	46	42	39	36
SCC-15	1 1/2	1.14	10	25	20	18	16	14	13	12	74	61	53	47	43	40	37
SCC-20	2	1.75	10	29	24	21	19	17	16	15	88	72	63	56	51	47	44
SCC-25	2 1/2	2.48	10	33	27	24	21	19	18	17	100	82	71	63	58	54	48
SCC-30	3	3.33	10	37	30	26	23	21	20	18	111	91	78	70	64	55	48
SCC-40	4	5.38	10	45	37	32	28	26	24	22	134	94	71	57	47	40	35
SCC-50	5	7.61	10	48	39	34	30	27	25	24	100	67	50	40	33	29	25
SCC-60	6	10.2	10	52	42	36	31	26	22	20	63	42	31	25	21	18	16

REVIEWED FOR CODE COMPLIANCE
OPM-0043-13
BY: Jeffrey K. Kikumoto
DATE: 06/23/2016
CALIFORNIA BUILDING CODE, 2013

NOTES:

1. MAXIMUM MW-SCC SPACINGS ARE THE MINIMUMS OF VALUES TAKEN FROM S1.2.2 AND MW-SCC CAPACITIES FOR THEIR RESPECTIVE PIPE SIZE AND g FORCE.
2. BRACE CAPACITY MAY GOVERN MAXIMUM SPACING IN SOME CASES.
3. REF. X8.1-X8.1.1 FOR MW-SCC DATA.
4. FOR MULTIPLE PIPES SUPPORTED ON A TRAPEZE, REFER TO PAGE A10.6, NOTE 3.

MASON WEST, INC.
1601 E. Miraloma Ave. Placentia, CA 92870
TEL (714) 630 - 0701, www.masonwest.com

Jiefu "Jeff" Zhang, SE
California SE No. S5270

PAGE
S3.1.1

PIPE	COPPER PIPE TYPE K - DRAWN W/ SOLDERED JOINTS MAX MW-SCC SPACINGS	VERTICAL FORCE Fpv = 0.375g (ASD)

PIPE W/WATER AND INSULATION

MAX PIPE CLAMP SPACING (TOP OF TRAPEZE INSTALLATION)

PART #	NPS	MAX WEIGHT PER FOOT (LBS/FT)	MAX GRAVITY SUPPORT SPACING (FT)	MAX TRANSVERSE SPACING (FT) g FORCE							MAX LONGITUDINAL SPACING (FT) g FORCE						
				0.25	0.375	0.5	0.625	0.75	0.875	1	0.25	0.375	0.5	0.625	0.75	0.875	1
SCC-13	1 1/4	2.30	7	25	22	20	18	17	16	15	74	65	59	55	51	47	44
SCC-15	1 1/2	2.80	8	28	25	23	21	19	17	16	85	74	68	62	56	52	49
SCC-20	2	4.20	8	33	30	26	24	22	20	19	99	76	57	46	38	33	29
SCC-25	2 1/2	5.80	9	37	33	28	22	18	16	14	83	55	41	33	28	24	21
SCC-30	3	7.60	10	41	28	21	17	14	12	11	84	56	42	34	28	24	21
SCC-40	4	12.4	10	47	32	24	19	16	14	12	61	41	31	25	20	18	15
SCC-50	5	18.6	10	39	26	19	15	13	11	10	41	27	20	16	14	12	10
SCC-60	6	25.1	10	32	21	16	13	11	9	8	25	17	13	10	8	7	6

PIPE ONLY (GAS)

MAX PIPE CLAMP SPACING (TOP OF TRAPEZE INSTALLATION)

PART #	NPS	MAX WEIGHT PER FOOT (LBS/FT)	MAX GRAVITY SUPPORT SPACING (FT)	MAX TRANSVERSE SPACING (FT) g FORCE							MAX LONGITUDINAL SPACING (FT) g FORCE						
				0.25	0.375	0.5	0.625	0.75	0.875	1	0.25	0.375	0.5	0.625	0.75	0.875	1
SCC-13	1 1/4	1.04	9	32	28	26	24	22	21	20	95	84	77	71	67	64	61
SCC-15	1 1/2	1.36	10	34	31	29	27	25	24	23	103	93	86	80	75	71	68
SCC-20	2	2.06	10	40	36	33	31	30	29	27	119	107	100	93	78	67	58
SCC-25	2 1/2	2.93	10	44	40	37	35	33	31	27	132	109	82	66	55	47	41
SCC-30	3	4.00	10	48	43	40	32	27	23	20	144	107	80	64	53	46	40
SCC-40	4	6.51	10	55	50	46	37	31	26	23	117	78	58	47	39	33	29
SCC-50	5	9.67	10	62	50	37	30	25	21	19	79	52	39	31	26	22	20
SCC-60	6	13.9	10	58	38	29	23	19	16	14	46	31	23	18	15	13	12

OSHPD
VERIFIED FOR CODE COMPLIANCE
BY Jeffrey K. Kikumoto
DATE 06/23/2016
CALIFORNIA BUILDING CODE, 2013

NOTES:

1. MAXIMUM MW-SCC SPACINGS ARE THE MINIMUMS OF VALUES TAKEN FROM S1.3.1 AND MW-SCC CAPACITIES FOR THEIR RESPECTIVE PIPE SIZE AND g FORCE.
2. BRACE CAPACITY MAY GOVERN MAXIMUM SPACING IN SOME CASES.
3. REF. X8.1-X8.1.1 FOR MW-SCC DATA.
4. FOR MULTIPLE PIPES SUPPORTED ON A TRAPEZE, REFER TO PAGE A10.6, NOTE 3.

MASON WEST, INC.
1601 E. Miraloma Ave. Placentia, CA 92870
TEL (714) 630 - 0701, www.masonwest.com

Jiefu "Jeff" Zhang, SE
California SE No. S5270

PAGE
S3.2

PIPE	COPPER PIPE TYPE K - ANNEALED MAX MW-SCC SPACINGS	VERTICAL FORCE Fpv = 0.375g (ASD)

PIPE W/WATER AND INSULATION

MAX PIPE CLAMP SPACING (TOP OF TRAPEZE INSTALLATION)																	
				MAX TRANSVERSE SPACING (FT)							MAX LONGITUDINAL SPACING (FT)						
				g FORCE							g FORCE						
PART #	NPS	MAX WEIGHT PER FOOT (LBS/FT)	MAX GRAVITY SUPPORT SPACING (FT)	0.25	0.375	0.5	0.625	0.75	0.875	1	0.25	0.375	0.5	0.625	0.75	0.875	1
SCC-13	1 1/4	2.30	7	16	13	11	10	9	8	8	48	39	34	30	27	25	24
SCC-15	1 1/2	2.80	8	17	14	12	11	10	9	9	51	42	36	32	29	27	26
SCC-20	2	4.20	8	21	17	15	13	12	11	10	63	51	44	40	36	33	29
SCC-25	2 1/2	5.80	9	23	18	16	14	13	12	11	68	55	41	33	28	24	21
SCC-30	3	7.60	10	25	20	17	16	14	13	11	74	56	42	34	28	24	21
SCC-40	4	12.4	10	30	25	21	19	16	14	12	61	41	31	25	20	18	15
SCC-50	5	18.6	10	35	26	19	15	13	11	10	41	27	20	16	14	12	10
SCC-60	6	25.1	10	32	21	16	13	11	9	8	25	17	13	10	8	7	6

PIPE ONLY (GAS)

MAX PIPE CLAMP SPACING (TOP OF TRAPEZE INSTALLATION)																	
				MAX TRANSVERSE SPACING (FT)							MAX LONGITUDINAL SPACING (FT)						
				g FORCE							g FORCE						
PART #	NPS	MAX WEIGHT PER FOOT (LBS/FT)	MAX GRAVITY SUPPORT SPACING (FT)	0.25	0.375	0.5	0.625	0.75	0.875	1	0.25	0.375	0.5	0.625	0.75	0.875	1
SCC-13	1 1/4	1.04	9	27	22	19	17	15	14	13	80	65	56	50	46	43	40
SCC-15	1 1/2	1.36	10	28	23	20	18	16	15	14	83	68	59	53	48	45	42
SCC-20	2	2.06	10	32	27	23	21	19	17	16	97	80	69	62	56	52	49
SCC-25	2 1/2	2.93	10	37	30	26	23	21	20	18	110	90	78	66	55	47	41
SCC-30	3	4.00	10	41	33	29	26	23	22	20	122	100	80	64	53	46	40
SCC-40	4	6.51	10	47	39	33	30	27	25	23	117	78	58	47	39	33	29
SCC-50	5	9.67	10	53	43	37	30	25	21	19	79	52	39	31	26	22	20
SCC-60	6	13.9	10	58	38	29	23	19	16	14	46	31	23	18	15	13	12

CERTIFIED FOR CODE COMPLIANCE
OPM-0043-13
BY Jeffrey K. Kikumoto
DATE 06/23/2016
CALIFORNIA BUILDING CODE, 2013

NOTES:

1. MAXIMUM MW-SCC SPACINGS ARE THE MINIMUMS OF VALUES TAKEN FROM S1.3.2 AND MW-SCC CAPACITIES FOR THEIR RESPECTIVE PIPE SIZE AND g FORCE.
2. BRACE CAPACITY MAY GOVERN MAXIMUM SPACING IN SOME CASES.
3. REF. X8.1-X8.1.1 FOR MW-SCC DATA.
4. FOR MULTIPLE PIPES SUPPORTED ON A TRAPEZE, REFER TO PAGE A10.6, NOTE 3.

MASON WEST, INC.
1601 E. Miraloma Ave. Placentia, CA 92870
TEL (714) 630 - 0701, www.masonwest.com

Jiefu "Jeff" Zhang, SE
California SE No. S5270

PAGE
S3.2.1

THIS PAGE INTENTIONALLY LEFT BLANK.

MASON WEST, INC.
1601 E. Miraloma Ave. Placentia, CA 92870
TEL (714) 630 - 0701, www.masonwest.com

Jiefu "Jeff" Zhang, SE
California SE No. S5270

PAGE
S4.0

CONDUIT	IMTERMEDIATE METAL CONDUIT (IMC) MAXIMUM MW-SSC/SSCE SPACINGS	VERTICAL FORCE Fpv = 0.375g (ASD)

MAX PIPE CLAMP SPACING (TOP OF TRAPEZE INSTALLATION)

PART #	NPS	MAX WEIGHT PER FOOT (LBS/FT)	MAX GRAVITY SUPPORT SPACING (FT)	MAX TRANSVERSE SPACING (FT) g FORCE							MAX LONGITUDINAL SPACING (FT) g FORCE						
				0.25	0.375	0.5	0.625	0.75	0.875	1	0.25	0.375	0.5	0.625	0.75	0.875	1
SSCE-08	3/4	1.10	10	29	26	23	22	20	19	19	88	77	70	65	61	58	56
SSCE-10	1	1.61	10	33	30	27	25	24	23	22	99	90	82	76	71	68	65
SSCE-13	1 1/4	2.29	10	37	33	31	29	27	26	25	111	100	93	87	82	78	75
SSCE-15	1 1/2	2.9	10	39	35	33	31	30	28	27	118	106	99	94	89	85	81
SSCE-20	2	4.1	10	43	39	36	35	33	32	31	130	118	109	104	94	81	71
SSC-25	2 1/2	6.3	10	49	44	41	39	34	29	25	147	133	102	81	68	58	51
SSC-30	3	8.9	10	52	47	36	29	24	21	18	144	96	72	58	48	41	36
SSC-40	4	12.9	10	58	52	40	32	27	23	20	90	60	45	36	30	26	22

MAX PIPE CLAMP SPACING (BOTTOM OF TRAPEZE INSTALLATION)

PART #	NPS	MAX WEIGHT PER FOOT (LBS/FT)	MAX GRAVITY SUPPORT SPACING (FT)	MAX TRANSVERSE SPACING (FT) g FORCE							MAX LONGITUDINAL SPACING (FT) g FORCE						
				0.25	0.375	0.5	0.625	0.75	0.875	1	0.25	0.375	0.5	0.625	0.75	0.875	1
SSCE-08	3/4	1.10	10	29	26	23	22	20	19	19	88	77	70	65	61	58	56
SSCE-10	1	1.61	10	33	30	27	25	24	23	22	99	90	82	76	71	68	65
SSCE-13	1 1/4	2.29	10	37	33	31	29	27	26	25	111	100	93	87	82	78	75
SSCE-15	1 1/2	2.9	10	39	35	33	31	30	28	27	118	106	99	94	89	85	81
SSCE-20	2	4.1	10	43	39	36	35	33	32	31	130	118	109	104	91	78	68
SSC-25	2 1/2	6.3	10	49	44	41	38	32	27	24	147	131	98	79	66	56	49
SSC-30	3	8.9	10	52	47	36	29	24	21	18	139	93	70	56	46	40	35
SSC-40	4	12.9	10	58	50	37	30	25	21	19	84	56	42	33	28	24	21

REVIEWED FOR CODE COMPLIANCE
OSHPD
OPM-0043-13
BY: Jeffrey Y. Kikumoto
CALIFORNIA BUILDING CODE 2013

NOTES:

1. MAXIMUM MW-SSCE SPACINGS ARE THE MINIMUMS OF VALUES TAKEN FROM S2.1 AND MW-SSCE CAPACITIES FOR THEIR RESPECTIVE PIPE SIZE AND g FORCE.
2. BRACE CAPACITY MAY GOVERN MAXIMUM SPACING IN SOME CASES.
3. REF. X8.0-X8.0.1 FOR MW-SSCE DATA.
4. FOR MULTIPLE CONDUITS SUPPORTED ON A TRAPEZE, REFER TO PAGE A20.5, NOTE 3.

MASON WEST, INC.
1601 E. Miraloma Ave. Placentia, CA 92870
TEL (714) 630 - 0701, www.masonwest.com

Jiefu "Jeff" Zhang, SE
California SE No. S5270

PAGE
S4.1

CONDUIT	RIGID METAL CONDUIT (RMC) MAXIMUM MW-SSC SPACINGS	VERTICAL FORCE Fpv = 0.375g (ASD)

MAX PIPE CLAMP SPACING (TOP OF TRAPEZE INSTALLATION)

PART #	NPS	MAX WEIGHT PER FOOT (LBS/FT)	MAX GRAVITY SUPPORT SPACING (FT)	MAX TRANSVERSE SPACING (FT) g FORCE							MAX LONGITUDINAL SPACING (FT) g FORCE						
				0.25	0.375	0.5	0.625	0.75	0.875	1	0.25	0.375	0.5	0.625	0.75	0.875	1
SSC-08	3/4	1.33	10	30	26	24	22	21	20	19	91	79	72	67	63	60	57
SSC-10	1	2.0	10	34	31	28	26	24	23	22	101	92	70	56	47	40	35
SSC-13	1 1/4	2.8	10	38	34	32	30	28	27	26	113	102	95	90	76	65	57
SSC-15	1 1/2	3.5	10	40	36	34	32	31	29	26	121	99	74	59	50	42	37
SSC-20	2	5.0	10	45	40	38	35	34	30	26	134	121	113	93	77	66	58
SSC-25	2 1/2	7.7	10	49	45	41	35	29	25	22	148	114	86	69	57	49	43
SSC-30	3	10.5	10	54	49	38	30	25	22	19	137	91	69	55	46	39	34
SSC-40	4	15.9	10	61	44	33	26	22	19	16	73	49	36	29	24	21	18
SSC-50	5	22.8	10	65	43	32	26	22	19	16	82	55	41	33	27	24	21
SSC-60	6	31.0	10	45	30	23	18	15	13	11	58	39	29	23	19	17	15

MAX PIPE CLAMP SPACING (BOTTOM OF TRAPEZE INSTALLATION)

PART #	NPS	MAX WEIGHT PER FOOT (LBS/FT)	MAX GRAVITY SUPPORT SPACING (FT)	MAX TRANSVERSE SPACING (FT) g FORCE							MAX LONGITUDINAL SPACING (FT) g FORCE						
				0.25	0.375	0.5	0.625	0.75	0.875	1	0.25	0.375	0.5	0.625	0.75	0.875	1
SSC-08	3/4	1.33	10	30	26	24	22	21	20	19	91	79	72	67	63	60	57
SSC-10	1	2.0	10	34	31	28	26	24	23	22	101	92	70	56	47	40	35
SSC-13	1 1/4	2.8	10	38	34	32	30	28	27	25	113	102	95	90	76	65	57
SSC-15	1 1/2	3.5	10	40	36	34	32	31	29	26	121	99	74	59	50	42	37
SSC-20	2	5.0	10	45	40	38	35	34	30	26	134	121	112	90	75	64	56
SSC-25	2 1/2	7.7	10	49	45	41	33	28	24	21	148	107	81	64	54	46	40
SSC-30	3	10.5	10	54	48	36	29	24	21	18	130	86	65	52	43	37	32
SSC-40	4	15.9	10	61	42	31	25	21	18	16	68	45	34	27	23	19	17
SSC-50	5	22.8	10	60	40	30	24	20	17	15	75	50	38	30	25	22	19
SSC-60	6	31.0	10	39	26	19	15	13	11	10	49	33	25	20	16	14	12

REVIEWED FOR CODE COMPLIANCE
OSHPD
OPM-0043-13
BY: Jeffrey Y. Kikumoto
DATE: 06/23/2016
OFFICE OF STATEWIDE HEALTH PLANNING & DEVELOPMENT
CALIFORNIA BUILDING CODES

NOTES:

1. MAXIMUM MW-SSC SPACINGS ARE THE MINIMUMS OF VALUES TAKEN FROM S2.2 AND MW-SSC CAPACITIES FOR THEIR RESPECTIVE PIPE SIZE AND g FORCE.
2. BRACE CAPACITY MAY GOVERN MAXIMUM SPACING IN SOME CASES.
3. REF. X8.0-X8.0.1 FOR MW-SSC DATA.
4. FOR MULTIPLE CONDUITS SUPPORTED ON A TRAPEZE, REFER TO PAGE A20.5, NOTE 3.

MASON WEST, INC.
1601 E. Miraloma Ave. Placentia, CA 92870
TEL (714) 630 - 0701, www.masonwest.com

Jiefu "Jeff" Zhang, SE
California SE No. S5270

PAGE
S4.2

DUCT	TRAPEZE SELECTION TABLES	VERTICAL FORCE Fpv = 0.375g (ASD)

Fpv = 0.375g		TRAPEZE SIZE DESIGNATION @ TRANSVERSE SEISMIC BRACE LOCATIONS				
DUCT SUPPORT AT 10'-0" MAX.		MAX TRAPEZE SPAN				
		36 IN	54 IN	72 IN	96 IN	120 IN
DUCT WEIGHT (LBS/FT)	10	A	A	A	B	B
	20	A	A	A	B	B
	30	B	B	B	B	B
	40	B	B	B	B	B
	50	B	B	B	B	D
	60	B	B	D	D	F
	70	D	D	D	F	F
	80	D	D	D	F	F
	90	D	D	D	F	F
	100	D	D	F	F	F

TRAPEZE MEMBER TABLE

		ALLOWABLE MOMENT CAPACITY (KIP-IN)									
		36" SPAN		54" SPAN		72" SPAN		96" SPAN		120" SPAN	
DESIGNATION	SIZE	Mcx	Mcy	Mcx	Mcy	Mcx	Mcy	Mcx	Mcy	Mcx	Mcy
A	13/16 x 1 5/8 x 12GA SINGLE STRUT	1.61	3.94	1.60	3.41	1.57	2.88	N/A	N/A	N/A	N/A
B	1 5/8 x 1 5/8 x 12GA SINGLE STRUT	4.76	6.57	4.23	6.38	3.84	5.95	3.45	5.40	3.12	4.85
D	1 5/8 x 3 1/4 x 12GA SINGLE STRUT	13.26	11.11	9.25	11.11	6.42	11.11	4.78	10.87	3.98	10.35
F	L3x3x1/4 (HSS2x2x1/4)	17.05	17.05	16.61	16.62	16.15	16.15	15.53	15.53	14.93	14.93
G	L4x4x1/4 (HSS2x2x1/4)	25.94	25.94	25.94	25.94	25.94	25.94	25.74	25.74	24.89	24.89

REVIEWED FOR CODE COMPLIANCE
BY: Jeffrey Y. Kikumoto
CITY OF LOS ANGELES BUILDING DEPARTMENT

NOTES:

1. **REFER TO TABLE ABOVE FOR TRAPEZE MEMBER SIZE DESIGNATIONS & ALLOWABLE MOMENT CAPACITIES.**
2. **STEEL ANGLE MAY BE USED IN PLACE OF CHANNEL STRUT. FOR 1⅝"x1⅝"x12 GA SINGLE STRUT, USE L2½x2½x¼. FOR 1⅝"x3¼"x12 GA SINGLE STRUT, USE L3x3x¼. FOR 1⅝"x1⅝"x12 GA SINGLE STRUT CONTRACTOR MAY USE 1⅝x1 13/16x12GA DOUBLE STRUT AS A SUBSTITUTION.**
3. **TRAPEZE MEMBERS MAY BE PROVIDED WITH ROUND HOLES. REFER TO X7.0 AND X7.1 FOR STRUT MEMBER DATA.**
4. **MAXIMUM SPAN OF TRAPEZE MEMBER IS MEASURED BETWEEN CENTER OF HANGER RODS.**
5. **CONTRACTOR MAY USE ANY TRAPEZE MEMBER SIZE LARGER THAN IS TABULATED. FOR EXAMPLE, IF TRAPEZE MEMBER "A" IS THE MINIMUM REQUIREMENT, TRAPEZE MEMBER B, D, F, OR G CAN ALSO BE USED.**
6. **WHEN INCREASING DISTANCE FROM EDGE OF DUCT TO CENTER OF HANGER ROD MORE THAN 6", INCREASE THE WEIGHT PER FOOT BY A FACTOR OF INCREASED EDGE DISTANCE DIVIDED BY 6". FOR EXAMPLE, A 12" DUCT WEIGHING 9 LB/FT WITH AN EDGE DISTANCE OF 12" MUST INCREASE THE WEIGHT BY A FACTOR OF 2 (12"/6") TO USE THE ABOVE TABLE.**
7. **MAXIMUM TRANSVERSE DUCT BRACE SPACING IS 30 FEET.**

MASON WEST, INC.
1601 E. Miraloma Ave. Placentia, CA 92870
TEL (714) 630 - 0701, www.masonwest.com

Jiefu "Jeff" Zhang, SE
California SE No. S5270

PAGE
T1.0

DUCT	TRAPEZE SELECTION TABLES	LATERAL FORCE Fp = 0.25g (ASD) VERTICAL FORCE Fpv = 0.375g (ASD)

Fp = 0.25g Fpv = 0.375g		TRAPEZE SIZE DESIGNATION @ ALL-DIRECTIONAL AND LONGITUDINAL SEISMIC BRACE LOCATIONS														
DUCT SUPPORT AT 10'-0" MAX.		LONG. & ALL-DIR. SEISMIC LOCATION SPACING 10 FT					LONG. & ALL-DIR. SEISMIC LOCATION SPACING 20 FT					LONG. & ALL-DIR. SEISMIC LOCATION SPACING 30 FT				
		MAX TRAPEZE SPAN					MAX TRAPEZE SPAN					MAX TRAPEZE SPAN				
		36 IN	54 IN	72 IN	96 IN	120 IN	36 IN	54 IN	72 IN	96 IN	120 IN	36 IN	54 IN	72 IN	96 IN	120 IN
DUCT WEIGHT (LBS/FT)	10	A	A	A	B	B	A	A	A	B	B	A	A	A	B	B
	20	A	A	A	B	B	A	A	A	B	B	A	A	A	B	B
	30	A	A	B	B	B	A	A	B	B	B	A	A	B	B	B
	40	A	B	B	B	B	A	B	B	B	B	A	B	B	B	B
	50	B	B	B	B	B	B	B	B	B	B	B	B	B	B	B
	60	B	B	B	B	B	B	B	B	B	B	B	B	B	B	B
	70	B	B	B	B	B	B	B	B	B	B	B	B	B	B	B
	80	B	B	B	B	B	B	B	B	B	B	B	B	B	B	B
	90	B	B	B	B	B	B	B	B	B	B	B	B	B	B	B
	100	B	B	B	B	D	B	B	B	B	D	B	B	B	B	D

Fp = 0.25g Fpv = 0.375g		TRAPEZE SIZE DESIGNATION @ ALL-DIRECTIONAL AND LONGITUDINAL SEISMIC BRACE LOCATIONS														
DUCT SUPPORT AT 10'-0" MAX.		LONG. & ALL-DIR. SEISMIC LOCATION SPACING 40 FT					LONG. & ALL-DIR. SEISMIC LOCATION SPACING 50 FT					LONG. & ALL-DIR. SEISMIC LOCATION SPACING 60 FT				
		MAX TRAPEZE SPAN					MAX TRAPEZE SPAN					MAX TRAPEZE SPAN				
		36 IN	54 IN	72 IN	96 IN	120 IN	36 IN	54 IN	72 IN	96 IN	120 IN	36 IN	54 IN	72 IN	96 IN	120 IN
DUCT WEIGHT (LBS/FT)	10	A	A	A	B	B	A	A	A	B	B	A	A	A	B	B
	20	A	A	A	B	B	A	A	A	B	B	A	A	A	B	B
	30	A	A	B	B	B	A	A	B	B	B	A	A	B	B	B
	40	A	B	B	B	B	A	B	B	B	B	A	B	B	B	B
	50	B	B	B	B	B	B	B	B	B	B	B	B	B	B	B
	60	B	B	B	B	B	B	B	B	B	B	B	B	B	B	B
	70	B	B	B	B	B	B	B	B	B	B	B	B	B	B	D
	80	B	B	B	B	B	B	B	B	B	D	B	B	D	D	D
	90	B	B	B	B	B	B	B	B	D	D	D	D	D	D	D
	100	B	B	B	B	D	B	B	D	D	D	D	D	D	D	D

REVIEWED FOR CODE COMPLIANCE
OSHPD
BY Jeffrey Kikumoto
DATE 06/23/2016
CALIFORNIA BUILDING CODE

NOTES:

1. REFER TO PAGE T1.0 FOR TRAPEZE MEMBER SIZE DESIGNATIONS & ALLOWABLE MOMENT CAPACITIES.
2. STEEL ANGLE MAY BE USED IN PLACE OF CHANNEL STRUT. FOR 1⅝"x1⅝"x12 GA SINGLE STRUT, USE L2½x2½x¼. FOR 1⅝"x3¼"x12 GA SINGLE STRUT, USE L3x3x¼. FOR 1⅝"x1⅝"x12 GA SINGLE STRUT CONTRACTOR MAY USE 1⅝x1$^{13}/_{16}$x12GA DOUBLE STRUT AS A SUBSTITUTION.
3. TRAPEZE MEMBERS MAY BE PROVIDED WITH ROUND HOLES. REFER TO X7.0 AND X7.1 FOR STRUT MEMBER DATA.
4. MAXIMUM SPAN OF TRAPEZE MEMBER IS MEASURED BETWEEN CENTER OF HANGER RODS.
5. CONTRACTOR MAY USE ANY TRAPEZE MEMBER SIZE LARGER THAN IS TABULATED. FOR EXAMPLE, IF TRAPEZE MEMBER "A" IS THE MINIMUM REQUIREMENT, TRAPEZE MEMBER B, D, F, OR G CAN ALSO BE USED.
6. WHEN INCREASING DISTANCE FROM EDGE OF DUCT TO CENTER OF HANGER ROD MORE THAN 6", INCREASE THE WEIGHT PER FOOT BY A FACTOR OF INCREASED EDGE DISTANCE DIVIDED BY 6". FOR EXAMPLE, A 12" DUCT WEIGHING 9 LB/FT WITH AN EDGE DISTANCE OF 12" MUST INCREASE THE WEIGHT BY A FACTOR OF 2 (12"/6") TO USE THE ABOVE TABLE.
7. MAXIMUM LONGITUDINAL DUCT BRACE SPACING IS 60 FEET.

MASON WEST, INC.
1601 E. Miraloma Ave. Placentia, CA 92870
TEL (714) 630 - 0701, www.masonwest.com

Jiefu "Jeff" Zhang, SE
California SE No. S5270

PAGE
T1.1

DUCT	TRAPEZE SELECTION TABLES	LATERAL FORCE Fp = 0.375g (ASD) VERTICAL FORCE Fpv = 0.375g (ASD)

Fp = 0.375g Fpv = 0.375g		TRAPEZE SIZE DESIGNATION @ ALL-DIRECTIONAL AND LONGITUDINAL SEISMIC BRACE LOCATIONS														
DUCT SUPPORT AT 10'-0" MAX.		LONG. & ALL-DIR. SEISMIC LOCATION SPACING 10 FT					LONG. & ALL-DIR. SEISMIC LOCATION SPACING 20 FT					LONG. & ALL-DIR. SEISMIC LOCATION SPACING 30 FT				
		MAX TRAPEZE SPAN					MAX TRAPEZE SPAN					MAX TRAPEZE SPAN				
		36 IN	54 IN	72 IN	96 IN	120 IN	36 IN	54 IN	72 IN	96 IN	120 IN	36 IN	54 IN	72 IN	96 IN	120 IN
DUCT WEIGHT (LBS/FT)	10	A	A	A	B	B	A	A	A	B	B	A	A	A	B	B
	20	A	A	A	B	B	A	A	A	B	B	A	A	A	B	B
	30	A	A	B	B	B	A	A	B	B	B	A	A	B	B	B
	40	A	B	B	B	B	A	B	B	B	B	A	B	B	B	B
	50	B	B	B	B	B	B	B	B	B	B	B	B	B	B	B
	60	B	B	B	B	B	B	B	B	B	B	B	B	B	B	B
	70	B	B	B	B	B	B	B	B	B	B	B	B	B	B	B
	80	B	B	B	B	B	B	B	B	B	B	B	B	B	B	B
	90	B	B	B	B	B	B	B	B	B	B	B	B	B	B	D
	100	B	B	B	B	D	B	B	B	B	D	B	B	B	D	D

Fp = 0.375g Fpv = 0.375g		TRAPEZE SIZE DESIGNATION @ ALL-DIRECTIONAL AND LONGITUDINAL SEISMIC BRACE LOCATIONS														
DUCT SUPPORT AT 10'-0" MAX.		LONG. & ALL-DIR. SEISMIC LOCATION SPACING 40 FT					LONG. & ALL-DIR. SEISMIC LOCATION SPACING 50 FT					LONG. & ALL-DIR. SEISMIC LOCATION SPACING 60 FT				
		MAX TRAPEZE SPAN					MAX TRAPEZE SPAN					MAX TRAPEZE SPAN				
		36 IN	54 IN	72 IN	96 IN	120 IN	36 IN	54 IN	72 IN	96 IN	120 IN	36 IN	54 IN	72 IN	96 IN	120 IN
DUCT WEIGHT (LBS/FT)	10	A	A	A	B	B	A	A	A	B	B	A	A	A	B	B
	20	A	A	A	B	B	A	A	A	B	B	A	A	A	B	B
	30	A	A	B	B	B	A	A	B	B	B	A	A	B	B	B
	40	A	B	B	B	B	A	B	B	B	B	B	B	B	B	B
	50	B	B	B	B	B	B	B	B	B	B	B	B	B	D	D
	60	B	B	B	B	B	B	B	B	D	D	D	D	D	D	D
	70	B	B	B	B	D	B	D	D	D	D	D	D	D	D	D
	80	B	B	D	D	D	D	D	D	D	D	D	D	D	D	D
	90	D	D	D	D	D	D	D	D	D	D	D	D	D	D	D
	100	D	D	D	D	D	D	D	D	D	D	F	F	F	F	F

REVIEWED FOR CODE COMPLIANCE
OSHPD
PREVIEW
BY: Jeffrey A. Kikumoto
DATE: 06/23/2016
CALIFORNIA BUILDING CODE

NOTES:

1. REFER TO PAGE T1.0 FOR TRAPEZE MEMBER SIZE DESIGNATIONS & ALLOWABLE MOMENT CAPACITIES.
2. STEEL ANGLE MAY BE USED IN PLACE OF CHANNEL STRUT. FOR 1⅝"x1⅝"x12 GA SINGLE STRUT, USE L2½x2½x¼. FOR 1⅝"x3¼"x12 GA SINGLE STRUT, USE L3x3x¼. FOR 1⅝"x1⅝"x12 GA SINGLE STRUT CONTRACTOR MAY USE 1⅝x1 13/16x12GA DOUBLE STRUT AS A SUBSTITUTION.
3. TRAPEZE MEMBERS MAY BE PROVIDED WITH ROUND HOLES. REFER TO X7.0 AND X7.1 FOR STRUT MEMBER DATA.
4. MAXIMUM SPAN OF TRAPEZE MEMBER IS MEASURED BETWEEN CENTER OF HANGER RODS.
5. CONTRACTOR MAY USE ANY TRAPEZE MEMBER SIZE LARGER THAN IS TABULATED. FOR EXAMPLE, IF TRAPEZE MEMBER "A" IS THE MINIMUM REQUIREMENT, TRAPEZE MEMBER B, D, F, OR G CAN ALSO BE USED.
6. WHEN INCREASING DISTANCE FROM EDGE OF DUCT TO CENTER OF HANGER ROD MORE THAN 6", INCREASE THE WEIGHT PER FOOT BY A FACTOR OF INCREASED EDGE DISTANCE DIVIDED BY 6". FOR EXAMPLE, A 12" DUCT WEIGHING 9 LB/FT WITH AN EDGE DISTANCE OF 12" MUST INCREASE THE WEIGHT BY A FACTOR OF 2 (12"/6") TO USE THE ABOVE TABLE.
7. MAXIMUM LONGITUDINAL DUCT BRACE SPACING IS 60 FEET.

MASON WEST, INC.
1601 E. Miraloma Ave. Placentia, CA 92870
TEL (714) 630 - 0701, www.masonwest.com

Jiefu "Jeff" Zhang, SE
California SE No. S5270

PAGE
T1.2

DUCT	TRAPEZE SELECTION TABLES	LATERAL FORCE Fp = 0.50g (ASD) VERTICAL FORCE Fpv = 0.375g (ASD)

Fp = 0.5g Fpv = 0.375g		TRAPEZE SIZE DESIGNATION @ ALL-DIRECTIONAL AND LONGITUDINAL SEISMIC BRACE LOCATIONS														
DUCT SUPPORT AT 10'-0" MAX.		LONG. & ALL-DIR. SEISMIC LOCATION SPACING 10 FT					LONG. & ALL-DIR. SEISMIC LOCATION SPACING 20 FT					LONG. & ALL-DIR. SEISMIC LOCATION SPACING 30 FT				
		MAX TRAPEZE SPAN					MAX TRAPEZE SPAN					MAX TRAPEZE SPAN				
		36 IN	54 IN	72 IN	96 IN	120 IN	36 IN	54 IN	72 IN	96 IN	120 IN	36 IN	54 IN	72 IN	96 IN	120 IN
DUCT WEIGHT (LBS/FT)	10	A	A	A	B	B	A	A	A	B	B	A	A	A	B	B
	20	A	A	A	B	B	A	A	A	B	B	A	A	A	B	B
	30	A	A	B	B	B	A	A	B	B	B	A	A	B	B	B
	40	A	B	B	B	B	A	B	B	B	B	A	B	B	B	B
	50	B	B	B	B	B	B	B	B	B	B	B	B	B	B	B
	60	B	B	B	B	B	B	B	B	B	B	B	B	B	B	B
	70	B	B	B	B	B	B	B	B	B	B	B	B	B	B	D
	80	B	B	B	B	B	B	B	B	B	B	B	B	D	D	D
	90	B	B	B	B	B	B	B	B	B	B	D	D	D	D	D
	100	B	B	B	B	D	B	B	B	B	D	D	D	D	D	D

Fp = 0.5g Fpv = 0.375g		TRAPEZE SIZE DESIGNATION @ ALL-DIRECTIONAL AND LONGITUDINAL SEISMIC BRACE LOCATIONS														
DUCT SUPPORT AT 10'-0" MAX.		LONG. & ALL-DIR. SEISMIC LOCATION SPACING 40 FT					LONG. & ALL-DIR. SEISMIC LOCATION SPACING 50 FT					LONG. & ALL-DIR. SEISMIC LOCATION SPACING 60 FT				
		MAX TRAPEZE SPAN					MAX TRAPEZE SPAN					MAX TRAPEZE SPAN				
		36 IN	54 IN	72 IN	96 IN	120 IN	36 IN	54 IN	72 IN	96 IN	120 IN	36 IN	54 IN	72 IN	96 IN	120 IN
DUCT WEIGHT (LBS/FT)	10	A	A	A	B	B	A	A	A	B	B	A	A	A	B	B
	20	A	A	A	B	B	A	A	A	B	B	A	A	B	B	B
	30	A	A	B	B	B	A	B	B	B	B	B	B	B	B	B
	40	B	B	B	B	B	B	B	B	B	D	B	B	D	D	D
	50	B	B	B	B	D	B	B	D	D	D	D	D	D	D	D
	60	B	B	D	D	D	D	D	D	D	D	D	D	D	D	D
	70	D	D	D	D	D	D	D	D	D	D	D	D	D	D	F
	80	D	D	D	D	D	D	D	D	D	D	F	F	F	F	F
	90	D	D	D	D	D	F	F	F	F	F	F	F	F	F	F
	100	D	D	D	D	D	F	F	F	F	F	F	F	F	F	G

REVIEWED FOR CODE COMPLIANCE
OSHPD
BY Jeffrey P. Kikumoto
DATE: 06/23/2016
CALIFORNIA BUILDING CODE

NOTES:

1. REFER TO PAGE T1.0 FOR TRAPEZE MEMBER SIZE DESIGNATIONS & ALLOWABLE MOMENT CAPACITIES.
2. STEEL ANGLE MAY BE USED IN PLACE OF CHANNEL STRUT. FOR 1⅝"x1⅝"x12 GA SINGLE STRUT, USE L2½x2½x¼. FOR 1⅝"x3¼"x12 GA SINGLE STRUT, USE L3x3x¼. FOR 1⅝"x1⅝"x12 GA SINGLE STRUT CONTRACTOR MAY USE 1⅝x1$^{13}/_{16}$x12GA DOUBLE STRUT AS A SUBSTITUTION.
3. TRAPEZE MEMBERS MAY BE PROVIDED WITH ROUND HOLES. REFER TO X7.0 AND X7.1 FOR STRUT MEMBER DATA.
4. MAXIMUM SPAN OF TRAPEZE MEMBER IS MEASURED BETWEEN CENTER OF HANGER RODS.
5. CONTRACTOR MAY USE ANY TRAPEZE MEMBER SIZE LARGER THAN IS TABULATED. FOR EXAMPLE, IF TRAPEZE MEMBER "A" IS THE MINIMUM REQUIREMENT, TRAPEZE MEMBER B, D, F, OR G CAN ALSO BE USED.
6. WHEN INCREASING DISTANCE FROM EDGE OF DUCT TO CENTER OF HANGER ROD MORE THAN 6", INCREASE THE WEIGHT PER FOOT BY A FACTOR OF INCREASED EDGE DISTANCE DIVIDED BY 6". FOR EXAMPLE, A 12" DUCT WEIGHING 9 LB/FT WITH AN EDGE DISTANCE OF 12" MUST INCREASE THE WEIGHT BY A FACTOR OF 2 (12"/6") TO USE THE ABOVE TABLE.
7. MAXIMUM LONGITUDINAL DUCT BRACE SPACING IS 60 FEET.

MASON WEST, INC.
1601 E. Miraloma Ave. Placentia, CA 92870
TEL (714) 630 - 0701, www.masonwest.com

Jiefu "Jeff" Zhang, SE
California SE No. S5270

PAGE
T1.3

DUCT	TRAPEZE SELECTION TABLES	LATERAL FORCE Fp = 0.625g (ASD) VERTICAL FORCE Fpv = 0.375g (ASD)

Fp = 0.625g Fpv = 0.375g		TRAPEZE SIZE DESIGNATION @ ALL-DIRECTIONAL AND LONGITUDINAL SEISMIC BRACE LOCATIONS														
DUCT SUPPORT AT 10'-0" MAX.		LONG. & ALL-DIR. SEISMIC LOCATION SPACING 10 FT					LONG. & ALL-DIR. SEISMIC LOCATION SPACING 20 FT					LONG. & ALL-DIR. SEISMIC LOCATION SPACING 30 FT				
		MAX TRAPEZE SPAN					MAX TRAPEZE SPAN					MAX TRAPEZE SPAN				
		36 IN	54 IN	72 IN	96 IN	120 IN	36 IN	54 IN	72 IN	96 IN	120 IN	36 IN	54 IN	72 IN	96 IN	120 IN
DUCT WEIGHT (LBS/FT)	10	A	A	A	B	B	A	A	A	B	B	A	A	A	B	B
	20	A	A	A	B	B	A	A	A	B	B	A	A	A	B	B
	30	A	A	B	B	B	A	A	B	B	B	A	A	B	B	B
	40	A	B	B	B	B	A	B	B	B	B	A	B	B	B	B
	50	B	B	B	B	B	B	B	B	B	B	B	B	B	B	B
	60	B	B	B	B	B	B	B	B	B	B	B	B	B	D	D
	70	B	B	B	B	B	B	B	B	B	B	B	D	D	D	D
	80	B	B	B	B	B	B	B	B	B	D	D	D	D	D	D
	90	B	B	B	B	B	B	B	B	D	D	D	D	D	D	D
	100	B	B	B	B	D	B	B	D	D	D	D	D	D	D	D

Fp = 0.625g Fpv = 0.375g		TRAPEZE SIZE DESIGNATION @ ALL-DIRECTIONAL AND LONGITUDINAL SEISMIC BRACE LOCATIONS														
DUCT SUPPORT AT 10'-0" MAX.		LONG. & ALL-DIR. SEISMIC LOCATION SPACING 40 FT					LONG. & ALL-DIR. SEISMIC LOCATION SPACING 50 FT					LONG. & ALL-DIR. SEISMIC LOCATION SPACING 60 FT				
		MAX TRAPEZE SPAN					MAX TRAPEZE SPAN					MAX TRAPEZE SPAN				
		36 IN	54 IN	72 IN	96 IN	120 IN	36 IN	54 IN	72 IN	96 IN	120 IN	36 IN	54 IN	72 IN	96 IN	120 IN
DUCT WEIGHT (LBS/FT)	10	A	A	A	B	B	A	A	A	B	B	A	A	A	B	B
	20	A	A	A	B	B	A	A	B	B	B	A	B	B	B	B
	30	A	B	B	B	B	B	B	B	B	B	B	B	B	D	D
	40	B	B	B	B	D	B	B	D	D	D	D	D	D	D	D
	50	B	B	D	D	D	D	D	D	D	D	D	D	D	D	D
	60	D	D	D	D	D	D	D	D	D	D	F	F	F	F	F
	70	D	D	D	D	D	D	D	D	F	F	F	F	F	F	F
	80	D	D	D	D	D	F	F	F	F	F	F	F	F	F	G
	90	F	F	F	F	F	F	F	F	F	F	F	G	G	G	G
	100	F	F	F	F	F	F	F	F	G	G	G	G	G	G	G

REVIEWED FOR CODE COMPLIANCE
OSHPD
PREAPPROVED
OPM-0043-13
BY: Jeffrey K. Kikumoto
DATE: 06/23/2016
CALIFORNIA BUILDING CODE 2013

NOTES:

1. REFER TO PAGE T1.0 FOR TRAPEZE MEMBER SIZE DESIGNATIONS & ALLOWABLE MOMENT CAPACITIES.
2. STEEL ANGLE MAY BE USED IN PLACE OF CHANNEL STRUT. FOR 1⅝"x1⅝"x12 GA SINGLE STRUT, USE L2½x2½x¼. FOR 1⅝"x3¼"x12 GA SINGLE STRUT, USE L3x3x¼. FOR 1⅝"x1⅝"x12 GA SINGLE STRUT CONTRACTOR MAY USE 1⅝x1 13/16x12GA DOUBLE STRUT AS A SUBSTITUTION.
3. TRAPEZE MEMBERS MAY BE PROVIDED WITH ROUND HOLES. REFER TO X7.0 AND X7.1 FOR STRUT MEMBER DATA.
4. MAXIMUM SPAN OF TRAPEZE MEMBER IS MEASURED BETWEEN CENTER OF HANGER RODS.
5. CONTRACTOR MAY USE ANY TRAPEZE MEMBER SIZE LARGER THAN IS TABULATED. FOR EXAMPLE, IF TRAPEZE MEMBER "A" IS THE MINIMUM REQUIREMENT, TRAPEZE MEMBER B, D, F, OR G CAN ALSO BE USED.
6. WHEN INCREASING DISTANCE FROM EDGE OF DUCT TO CENTER OF HANGER ROD MORE THAN 6", INCREASE THE WEIGHT PER FOOT BY A FACTOR OF INCREASED EDGE DISTANCE DIVIDED BY 6". FOR EXAMPLE, A 12" DUCT WEIGHING 9 LB/FT WITH AN EDGE DISTANCE OF 12" MUST INCREASE THE WEIGHT BY A FACTOR OF 2 (12"/6") TO USE THE ABOVE TABLE.
7. MAXIMUM LONGITUDINAL DUCT BRACE SPACING IS 60 FEET.

MASON WEST, INC.
1601 E. Miraloma Ave. Placentia, CA 92870
TEL (714) 630 - 0701, www.masonwest.com

Jiefu "Jeff" Zhang, SE
California SE No. S5270

PAGE
T1.4

DUCT	TRAPEZE SELECTION TABLES	LATERAL FORCE Fp = 0.75g (ASD) VERTICAL FORCE Fpv = 0.375g (ASD)

Fp = 0.75g Fpv = 0.375g		TRAPEZE SIZE DESIGNATION @ ALL-DIRECTIONAL AND LONGITUDINAL SEISMIC BRACE LOCATIONS														
DUCT SUPPORT AT 10'-0" MAX.		LONG. & ALL-DIR. SEISMIC LOCATION SPACING 10 FT					LONG. & ALL-DIR. SEISMIC LOCATION SPACING 20 FT					LONG. & ALL-DIR. SEISMIC LOCATION SPACING 30 FT				
		MAX TRAPEZE SPAN					MAX TRAPEZE SPAN					MAX TRAPEZE SPAN				
		36 IN	54 IN	72 IN	96 IN	120 IN	36 IN	54 IN	72 IN	96 IN	120 IN	36 IN	54 IN	72 IN	96 IN	120 IN
DUCT WEIGHT (LBS/FT)	10	A	A	A	B	B	A	A	A	B	B	A	A	A	B	B
	20	A	A	A	B	B	A	A	A	B	B	A	A	A	B	B
	30	A	A	B	B	B	A	A	B	B	B	A	A	B	B	B
	40	A	B	B	B	B	A	B	B	B	B	B	B	B	B	B
	50	B	B	B	B	B	B	B	B	B	B	B	B	B	D	D
	60	B	B	B	B	B	B	B	B	B	B	D	D	D	D	D
	70	B	B	B	B	B	B	B	B	B	D	D	D	D	D	D
	80	B	B	B	B	B	B	B	D	D	D	D	D	D	D	D
	90	B	B	B	B	B	D	D	D	D	D	D	D	D	D	D
	100	B	B	B	B	D	D	D	D	D	D	F	F	F	F	F

Fp = 0.75g Fpv = 0.375g		TRAPEZE SIZE DESIGNATION @ ALL-DIRECTIONAL AND LONGITUDINAL SEISMIC BRACE LOCATIONS														
DUCT SUPPORT AT 10'-0" MAX.		LONG. & ALL-DIR. SEISMIC LOCATION SPACING 40 FT					LONG. & ALL-DIR. SEISMIC LOCATION SPACING 50 FT					LONG. & ALL-DIR. SEISMIC LOCATION SPACING 60 FT				
		MAX TRAPEZE SPAN					MAX TRAPEZE SPAN					MAX TRAPEZE SPAN				
		36 IN	54 IN	72 IN	96 IN	120 IN	36 IN	54 IN	72 IN	96 IN	120 IN	36 IN	54 IN	72 IN	96 IN	120 IN
DUCT WEIGHT (LBS/FT)	10	A	A	A	B	B	A	A	A	B	B	A	A	A	B	B
	20	A	A	B	B	B	A	B	B	B	B	B	B	B	B	B
	30	B	B	B	B	B	B	B	B	D	D	D	D	D	D	D
	40	B	B	D	D	D	D	D	D	D	D	D	D	D	D	D
	50	D	D	D	D	D	D	D	D	D	D	F	F	F	F	F
	60	D	D	D	D	D	F	F	F	F	F	F	F	F	F	F
	70	D	D	D	D	F	F	F	F	F	F	F	F	F	G	G
	80	F	F	F	F	F	F	F	F	F	G	G	G	G	G	G
	90	F	F	F	F	F	F	G	G	G	G	G	G	G	G	G
	100	F	F	F	F	G	G	G	G	G	G	G	G	G	G	G

REVIEWED FOR CODE COMPLIANCE
OSHPD
PREVIEW
BY: Jeffrey R. Kikumoto
DATE: 06/23/2016
CALIFORNIA BUILDING CODE

NOTES:

1. REFER TO PAGE T1.0 FOR TRAPEZE MEMBER SIZE DESIGNATIONS & ALLOWABLE MOMENT CAPACITIES.
2. STEEL ANGLE MAY BE USED IN PLACE OF CHANNEL STRUT. FOR 1⅝"x1⅝"x12 GA SINGLE STRUT, USE L2½x2½x¼. FOR 1⅝"x3¼"x12 GA SINGLE STRUT, USE L3x3x¼. FOR 1⅝"x1⅝"x12 GA SINGLE STRUT CONTRACTOR MAY USE 1⅝x1 13/16x12GA DOUBLE STRUT AS A SUBSTITUTION.
3. TRAPEZE MEMBERS MAY BE PROVIDED WITH ROUND HOLES. REFER TO X7.0 AND X7.1 FOR STRUT MEMBER DATA.
4. MAXIMUM SPAN OF TRAPEZE MEMBER IS MEASURED BETWEEN CENTER OF HANGER RODS.
5. CONTRACTOR MAY USE ANY TRAPEZE MEMBER SIZE LARGER THAN IS TABULATED. FOR EXAMPLE, IF TRAPEZE MEMBER "A" IS THE MINIMUM REQUIREMENT, TRAPEZE MEMBER B, D, F, OR G CAN ALSO BE USED.
6. WHEN INCREASING DISTANCE FROM EDGE OF DUCT TO CENTER OF HANGER ROD MORE THAN 6", INCREASE THE WEIGHT PER FOOT BY A FACTOR OF INCREASED EDGE DISTANCE DIVIDED BY 6". FOR EXAMPLE, A 12" DUCT WEIGHING 9 LB/FT WITH AN EDGE DISTANCE OF 12" MUST INCREASE THE WEIGHT BY A FACTOR OF 2 (12"/6") TO USE THE ABOVE TABLE.
7. MAXIMUM LONGITUDINAL DUCT BRACE SPACING IS 60 FEET.

MASON WEST, INC.
1601 E. Miraloma Ave. Placentia, CA 92870
TEL (714) 630 - 0701, www.masonwest.com

Jiefu "Jeff" Zhang, SE
California SE No. S5270

PAGE
T1.5

DUCT	TRAPEZE SELECTION TABLES	LATERAL FORCE Fp = 0.875g (ASD) VERTICAL FORCE Fpv = 0.375g (ASD)

Fp = 0.875g Fpv = 0.375g		TRAPEZE SIZE DESIGNATION @ ALL-DIRECTIONAL AND LONGITUDINAL SEISMIC BRACE LOCATIONS														
DUCT SUPPORT AT 10'-0" MAX.		LONG. & ALL-DIR. SEISMIC LOCATION SPACING 10 FT					LONG. & ALL-DIR. SEISMIC LOCATION SPACING 20 FT					LONG. & ALL-DIR. SEISMIC LOCATION SPACING 30 FT				
		MAX TRAPEZE SPAN					MAX TRAPEZE SPAN					MAX TRAPEZE SPAN				
		36 IN	54 IN	72 IN	96 IN	120 IN	36 IN	54 IN	72 IN	96 IN	120 IN	36 IN	54 IN	72 IN	96 IN	120 IN
DUCT WEIGHT (LBS/FT)	10	A	A	A	B	B	A	A	A	B	B	A	A	A	B	B
	20	A	A	A	B	B	A	A	A	B	B	A	A	A	B	B
	30	A	A	B	B	B	A	A	B	B	B	A	B	B	B	B
	40	A	B	B	B	B	A	B	B	B	B	B	B	B	B	D
	50	B	B	B	B	B	B	B	B	B	B	B	D	D	D	D
	60	B	B	B	B	B	B	B	B	B	D	D	D	D	D	D
	70	B	B	B	B	B	B	B	D	D	D	D	D	D	D	D
	80	B	B	B	B	B	D	D	D	D	D	D	D	D	D	F
	90	B	B	B	B	B	D	D	D	D	D	F	F	F	F	F
	100	B	B	B	B	D	D	D	D	D	D	F	F	F	F	F

Fp = 0.875g Fpv = 0.375g		TRAPEZE SIZE DESIGNATION @ ALL-DIRECTIONAL AND LONGITUDINAL SEISMIC BRACE LOCATIONS														
DUCT SUPPORT AT 10'-0" MAX.		LONG. & ALL-DIR. SEISMIC LOCATION SPACING 40 FT					LONG. & ALL-DIR. SEISMIC LOCATION SPACING 50 FT					LONG. & ALL-DIR. SEISMIC LOCATION SPACING 60 FT				
		MAX TRAPEZE SPAN					MAX TRAPEZE SPAN					MAX TRAPEZE SPAN				
		36 IN	54 IN	72 IN	96 IN	120 IN	36 IN	54 IN	72 IN	96 IN	120 IN	36 IN	54 IN	72 IN	96 IN	120 IN
DUCT WEIGHT (LBS/FT)	10	A	A	A	B	B	A	A	A	B	B	A	A	A	B	B
	20	A	B	B	B	B	B	B	B	B	B	B	B	B	B	D
	30	B	B	B	B	D	B	D	D	D	D	D	D	D	D	D
	40	D	D	D	D	D	D	D	D	D	D	D	D	D	D	F
	50	D	D	D	D	D	D	D	D	F	F	F	F	F	F	F
	60	D	D	D	D	F	F	F	F	F	F	F	F	F	G	G
	70	F	F	F	F	F	F	F	F	F	G	G	G	G	G	G
	80	F	F	F	F	F	G	G	G	G	G	G	G	G	G	G
	90	F	F	F	G	G	G	G	G	G	G	G	G	G	G	G
	100	G	G	G	G	G	G	G	G	G	G	N/A	N/A	N/A	N/A	N/A

REVIEWED FOR CODE COMPLIANCE
OSHPD
BY Jeffrey D. Kikumoto
DATE: 06/23/2016
CALIFORNIA BUILDING CODE 2013

NOTES:

1. REFER TO PAGE T1.0 FOR TRAPEZE MEMBER SIZE DESIGNATIONS & ALLOWABLE MOMENT CAPACITIES.
2. STEEL ANGLE MAY BE USED IN PLACE OF CHANNEL STRUT. FOR 1⅝"x1⅝"x12 GA SINGLE STRUT, USE L2½x2½x¼. FOR 1⅝"x3¼"x12 GA SINGLE STRUT, USE L3x3x¼. FOR 1⅝"x1⅝"x12 GA SINGLE STRUT CONTRACTOR MAY USE 1⅝x1 13/16x12GA DOUBLE STRUT AS A SUBSTITUTION.
3. TRAPEZE MEMBERS MAY BE PROVIDED WITH ROUND HOLES. REFER TO X7.0 AND X7.1 FOR STRUT MEMBER DATA.
4. MAXIMUM SPAN OF TRAPEZE MEMBER IS MEASURED BETWEEN CENTER OF HANGER RODS.
5. CONTRACTOR MAY USE ANY TRAPEZE MEMBER SIZE LARGER THAN IS TABULATED. FOR EXAMPLE, IF TRAPEZE MEMBER "A" IS THE MINIMUM REQUIREMENT, TRAPEZE MEMBER B, D, F, OR G CAN ALSO BE USED.
6. WHEN INCREASING DISTANCE FROM EDGE OF DUCT TO CENTER OF HANGER ROD MORE THAN 6", INCREASE THE WEIGHT PER FOOT BY A FACTOR OF INCREASED EDGE DISTANCE DIVIDED BY 6". FOR EXAMPLE, A 12" DUCT WEIGHING 9 LB/FT WITH AN EDGE DISTANCE OF 12" MUST INCREASE THE WEIGHT BY A FACTOR OF 2 (12"/6") TO USE THE ABOVE TABLE.
7. MAXIMUM LONGITUDINAL DUCT BRACE SPACING IS 60 FEET.

MASON WEST, INC.
1601 E. Miraloma Ave. Placentia, CA 92870
TEL (714) 630 - 0701, www.masonwest.com

Jiefu "Jeff" Zhang, SE
California SE No. S5270

PAGE
T1.6

DUCT	TRAPEZE SELECTION TABLES	LATERAL FORCE Fp = 1.00g (ASD) VERTICAL FORCE Fpv = 0.375g (ASD)

Fp = 1g Fpv = 0.375g		TRAPEZE SIZE DESIGNATION @ ALL-DIRECTIONAL AND LONGITUDINAL SEISMIC BRACE LOCATIONS														
DUCT SUPPORT AT 10'-0" MAX.		LONG. & ALL-DIR. SEISMIC LOCATION SPACING 10 FT					LONG. & ALL-DIR. SEISMIC LOCATION SPACING 20 FT					LONG. & ALL-DIR. SEISMIC LOCATION SPACING 30 FT				
		MAX TRAPEZE SPAN					MAX TRAPEZE SPAN					MAX TRAPEZE SPAN				
		36 IN	54 IN	72 IN	96 IN	120 IN	36 IN	54 IN	72 IN	96 IN	120 IN	36 IN	54 IN	72 IN	96 IN	120 IN
DUCT WEIGHT (LBS/FT)	10	A	A	A	B	B	A	A	A	B	B	A	A	A	B	B
	20	A	A	A	B	B	A	A	A	B	B	A	A	B	B	B
	30	A	A	B	B	B	A	A	B	B	B	B	B	B	B	B
	40	A	B	B	B	B	B	B	B	B	B	B	B	D	D	D
	50	B	B	B	B	B	B	B	B	B	D	D	D	D	D	D
	60	B	B	B	B	B	B	B	D	D	D	D	D	D	D	D
	70	B	B	B	B	B	D	D	D	D	D	D	D	D	D	F
	80	B	B	B	B	B	D	D	D	D	D	F	F	F	F	F
	90	B	B	B	B	B	D	D	D	D	D	F	F	F	F	F
	100	B	B	B	B	D	D	D	D	D	D	F	F	F	F	G

Fp = 1g Fpv = 0.375g		TRAPEZE SIZE DESIGNATION @ ALL-DIRECTIONAL AND LONGITUDINAL SEISMIC BRACE LOCATIONS														
DUCT SUPPORT AT 10'-0" MAX.		LONG. & ALL-DIR. SEISMIC LOCATION SPACING 40 FT					LONG. & ALL-DIR. SEISMIC LOCATION SPACING 50 FT					LONG. & ALL-DIR. SEISMIC LOCATION SPACING 60 FT				
		MAX TRAPEZE SPAN					MAX TRAPEZE SPAN					MAX TRAPEZE SPAN				
		36 IN	54 IN	72 IN	96 IN	120 IN	36 IN	54 IN	72 IN	96 IN	120 IN	36 IN	54 IN	72 IN	96 IN	120 IN
DUCT WEIGHT (LBS/FT)	10	A	A	A	B	B	A	A	A	B	B	A	A	B	B	B
	20	B	B	B	B	B	B	B	B	B	D	B	B	D	D	D
	30	B	B	D	D	D	D	D	D	D	D	D	D	D	D	D
	40	D	D	D	D	D	D	D	D	D	D	F	F	F	F	F
	50	D	D	D	D	D	F	F	F	F	F	F	F	F	F	G
	60	F	F	F	F	F	F	F	F	F	G	G	G	G	G	G
	70	F	F	F	F	F	G	G	G	G	G	G	G	G	G	G
	80	F	F	F	G	G	G	G	G	G	G	G	G	G	G	G
	90	G	G	G	G	G	G	G	G	G	G	N/A	N/A	N/A	N/A	N/A
	100	G	G	G	G	G	G	G	G	G	N/A	N/A	N/A	N/A	N/A	N/A

NOTES:

1. REFER TO PAGE T1.0 FOR TRAPEZE MEMBER SIZE DESIGNATIONS & ALLOWABLE MOMENT CAPACITIES.
2. STEEL ANGLE MAY BE USED IN PLACE OF CHANNEL STRUT. FOR 1⅝"x1⅝"x12 GA SINGLE STRUT, USE L2½x2½x¼. FOR 1⅝"x3¼"x12 GA SINGLE STRUT, USE L3x3x¼. FOR 1⅝"x1⅝"x12 GA SINGLE STRUT CONTRACTOR MAY USE 1⅝x1$^{13}/_{16}$x12GA DOUBLE STRUT AS A SUBSTITUTION.
3. TRAPEZE MEMBERS MAY BE PROVIDED WITH ROUND HOLES. REFER TO X7.0 AND X7.1 FOR STRUT MEMBER DATA.
4. MAXIMUM SPAN OF TRAPEZE MEMBER IS MEASURED BETWEEN CENTER OF HANGER RODS.
5. CONTRACTOR MAY USE ANY TRAPEZE MEMBER SIZE LARGER THAN IS TABULATED. FOR EXAMPLE, IF TRAPEZE MEMBER "A" IS THE MINIMUM REQUIREMENT, TRAPEZE MEMBER B, D, F, OR G CAN ALSO BE USED.
6. WHEN INCREASING DISTANCE FROM EDGE OF DUCT TO CENTER OF HANGER ROD MORE THAN 6", INCREASE THE WEIGHT PER FOOT BY A FACTOR OF INCREASED EDGE DISTANCE DIVIDED BY 6". FOR EXAMPLE, A 12" DUCT WEIGHING 9 LB/FT WITH AN EDGE DISTANCE OF 12" MUST INCREASE THE WEIGHT BY A FACTOR OF 2 (12"/6") TO USE THE ABOVE TABLE.
7. MAXIMUM LONGITUDINAL DUCT BRACE SPACING IS 60 FEET.

REVIEWED FOR CODE COMPLIANCE
OSHPD
OPM-0043-13
By: Jeffrey P. Kikumoto
DATE: 06/23/2016
OSHPD CALIFORNIA BUILDING CODE

MASON WEST, INC.
1601 E. Miraloma Ave. Placentia, CA 92870
TEL (714) 630 - 0701, www.masonwest.com

Jiefu "Jeff" Zhang, SE
California SE No. S5270

PAGE
T1.7

PIPING/CONDUIT	TRAPEZE SELECTION TABLES	VERTICAL FORCE Fpv = 0.375g (ASD)

Fpv = 0.375g		TRAPEZE SIZE DESIGNATION @ TRANSVERSE SEISMIC BRACE LOCATIONS				
PIPING/CONDUIT SUPPORT AT 10'-0" MAX.		MAX TRAPEZE SPAN				
		36 IN	54 IN	72 IN	96 IN	120 IN
PIPING/CONDUIT WEIGHT (LBS/FT)	10	A	B	B	D	D
	20	B	B	D	D	E
	30	B	D	D	E	J
	40	B	D	E	E	J
	50	B	D	E	J	J
	60	D	D	E	J	J
	70	D	D	E	J	J
	80	D	E	J	J	J
	90	D	E	J	J	J
	100	D	E	J	J	J
	150	D	J	J	J	K
	200	G	J	J	K	K
	300	J	J	K	K	L
	400	J	J	K	K	L
	600	J	K	K	L	L

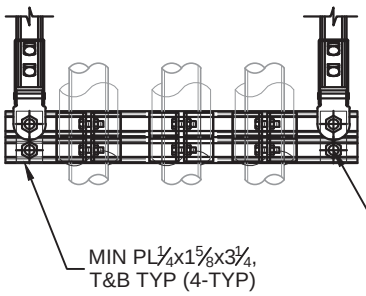

(2) TRAPEZE MEMBER INSTALLATION DETAIL FOR TRAPEZE MEMBER DESIGNATION AA, BB, CC,DD & EE

TRAPEZE MEMBER TABLE											
		ALLOWABLE MOMENT CAPACITY (KIP-IN)									
		36" SPAN		54" SPAN		72" SPAN		96" SPAN		120" SPAN	
DESIGNATION	SIZE	Mcx	Mcy	Mcx	Mcy	Mcx	Mcy	Mcx	Mcy	Mcx	Mcy
A	13/16 x 1 5/8 x 12GA SINGLE STRUT	1.61	3.94	1.60	3.41	1.57	2.88	1.52	2.21	1.48	1.76
AA	(2) 13/16 x 1 5/8 x 12GA SINGLE STRUT	1.61	7.88	1.60	6.81	1.57	5.77	1.52	4.42	1.48	3.51
B	1 5/8 x 1 5/8 x 12GA SINGLE STRUT	1.76	6.57	4.23	6.38	3.84	5.95	3.45	5.40	3.12	4.85
C	13/16 x 1 5/8 x 12GA DOUBLE STRUT	4.58	8.50	4.58	7.81	4.58	7.13	4.41	6.24	4.23	5.36
BB	(2) 1 5/8 x 1 5/8 x 12GA SINGLE STRUT	4.76	13.13	4.23	12.75	3.84	11.91	3.45	10.79	3.12	9.70
CC	(2) 13/16 x 1 5/8 x 12GA DOUBLE STRUT	4.58	17.00	4.58	15.62	4.58	14.26	4.41	12.49	4.23	10.73
D	1 5/8 x 3 1/4 x 12GA SINGLE STRUT	13.26	11.11	9.25	11.11	6.42	11.11	4.78	10.87	3.98	10.35
E	1 5/8 x 1 5/8 x 12GA DOUBLE STRUT	14.82	13.13	14.40	13.13	13.45	12.91	12.20	12.21	10.98	11.53
DD	(2) 1 5/8 x 3 1/4 x 12GA SINGLE STRUT	13.26	22.23	9.25	22.23	6.42	22.23	4.78	21.73	3.98	20.69
EE	(2) 1 5/8 x 1 5/8 x 12GA DOUBLE STRUT	14.82	26.26	14.40	26.26	13.45	25.81	12.20	24.42	10.98	23.05
G	HSS 2 x 2 x ¼ (L 4 x 4 x ¼)	25.94	25.94	25.94	25.94	25.94	25.94	25.74	25.74	24.89	24.89
J	HSS 3 x 3 x ¼ (L 6 x 6 x ⅜)	68.28	68.28	68.28	68.28	68.28	68.28	68.28	68.28	68.28	68.28
K	HSS 4 x 4 x ¼	129.60	129.60	129.60	129.60	129.60	129.60	129.60	129.60	129.60	129.60
L	HSS 6 x 6 x ⅜	435.60	435.60	435.60	435.60	435.60	435.60	435.60	435.60	435.60	435.60

NOTES:

1. **REFER TO TABLE ABOVE FOR TRAPEZE MEMBER SIZE DESIGNATIONS & ALLOWABLE MOMENT CAPACITIES.**
2. **STEEL ANGLE MAY BE USED IN PLACE OF CHANNEL STRUT. FOR 1⅝"x1⅝"x12 GA SINGLE STRUT, USE L2½x2½x¼. FOR 1⅝"x3¼"x12 GA SINGLE STRUT, USE L3x3x¼. FOR 1⅝"x1⅝"x12 GA SINGLE STRUT CONTRACTOR MAY USE 1⅝x1 13/16x12GA DOUBLE STRUT AS A SUBSTITUTION.**
3. **TRAPEZE MEMBERS MAY BE PROVIDED WITH ROUND HOLES. REFER TO X7.0 AND X7.1 FOR STRUT MEMBER DATA.**
4. **MAXIMUM SPAN OF TRAPEZE MEMBER IS MEASURED BETWEEN CENTER OF HANGER RODS.**
5. **CONTRACTOR MAY USE ANY TRAPEZE MEMBER SIZE LARGER THAN IS TABULATED. FOR EXAMPLE, IF TRAPEZE MEMBER SIZE "A" IS THE MINIMUM REQUIREMENT, THEN TRAPEZE MEMBER AA, B, BB, C, CC, D, DD, E, EE, G, J, K, OR L CAN ALSO BE USED.**
6. **PIPING/CONDUIT WEIGHT IN CHARTS IS THE TOTAL COMBINED WEIGHT OF ALL SYSTEMS SUPPORTED BY THE TRAPEZE. TRAPEZE DESIGN IS BASED ON SUPPORT OF AT LEAST (2) PIPES AT 1/3-1/3-1/3. FOR CASES WHERE (1) PIPE (OR A CONCENTRATION OF (2) OR MORE PIPES) IS LOCATED AT OR NEAR THE MID-SPAN, INCREASE THE PIPING/CONDUIT WEIGHT IN THE CHARTS BY 50% AND THEN USE THE TABLE TO SELECT THE TRAPEZE MEMBER.**
7. **INDIVIDUAL PIPING/CONDUIT MAY GOVERN MAXIMUM GRAVITY SUPPORT AND TRANSVERSE BRACE SPACING. REFER TO S1 AND S2 PAGES.**

MASON WEST, INC.
1601 E. Miraloma Ave. Placentia, CA 92870
TEL (714) 630 - 0701, www.masonwest.com

Jiefu "Jeff" Zhang, SE
California SE No. S5270

PAGE
T2.0

PIPING/CONDUIT	TRAPEZE SELECTION TABLES	LATERAL FORCE Fp = 0.25g (ASD) VERTICAL FORCE Fpv = 0.375g (ASD)

Fp = 0.25g Fpv = 0.375g		TRAPEZE SIZE DESIGNATION @ ALL-DIRECTIONAL AND LONGITUDINAL SEISMIC BRACE LOCATIONS																			
PIPING/CONDUIT SUPPORT AT 10'-0" MAX.		LONG. & ALL-DIR. SEISMIC LOCATION SPACING 10 FT					LONG. & ALL-DIR. SEISMIC LOCATION SPACING 20 FT					LONG. & ALL-DIR. SEISMIC LOCATION SPACING 30 FT					LONG. & ALL-DIR. SEISMIC LOCATION SPACING 40 FT				
		MAX TRAPEZE SPAN					MAX TRAPEZE SPAN					MAX TRAPEZE SPAN					MAX TRAPEZE SPAN				
		36 IN	54 IN	72 IN	96 IN	120 IN	36 IN	54 IN	72 IN	96 IN	120 IN	36 IN	54 IN	72 IN	96 IN	120 IN	36 IN	54 IN	72 IN	96 IN	120 IN
PIPING/CONDUIT WEIGHT (LBS/FT)	10	A	B	B	D	D	A	B	B	D	D	A	B	B	D	D	A	B	B	D	D
	20	B	B	D	D	E	B	B	D	DD	E	B	B	D	E	E	B	B	D	E	E
	30	B	D	D	E	J	B	D	D	E	J	B	D	DD	E	J	B	D	DD	E	J
	40	B	D	E	E	J	B	D	E	E	J	B	D	E	EE	J	BB	D	E	EE	J
	50	B	D	E	J	J	BB	D	E	J	J	D	D	E	J	J	D	DD	EE	J	J
	60	D	D	E	J	J	D	DD	EE	J	J	D	DD	EE	J	J	D	E	G	J	J
	70	D	E	EE	J	J	D	E	G	J	J	D	E	G	J	J	D	EE	G	J	J
	80	D	E	J	J	J	D	E	J	J	J	D	EE	J	J	J	D	EE	J	J	J
	90	D	E	J	J	J	D	EE	J	J	J	D	G	J	J	J	DD	G	J	J	J
	100	D	EE	J	J	J	D	G	J	J	J	DD	G	J	J	J	DD	G	J	J	J
	150	EE	J	J	J	K	G	J	J	J	K	G	J	J	J	K	G	J	J	J	K
	200	G	J	J	K	K	G	J	J	K	K	G	J	J	K	K	J	J	J	K	K
	300	J	J	K	K	L	J	J	K	K	L	J	J	K	K	L	J	J	K	K	L
	400	J	J	K	K	L	J	J	K	K	L	J	K	K	L	L	J	K	K	L	L
	600	J	K	K	L	L	J	K	L	L	L	K	K	L	L	L	K	K	L	L	L

Fp = 0.25g Fpv = 0.375g		TRAPEZE SIZE DESIGNATION @ ALL-DIRECTIONAL AND LONGITUDINAL SEISMIC BRACE LOCATIONS																			
PIPING/CONDUIT SUPPORT AT 10'-0" MAX.		LONG. & ALL-DIR. SEISMIC LOCATION SPACING 50 FT					LONG. & ALL-DIR. SEISMIC LOCATION SPACING 60 FT					LONG. & ALL-DIR. SEISMIC LOCATION SPACING 70 FT					LONG. & ALL-DIR. SEISMIC LOCATION SPACING 80 FT				
		MAX TRAPEZE SPAN					MAX TRAPEZE SPAN					MAX TRAPEZE SPAN					MAX TRAPEZE SPAN				
		36 IN	54 IN	72 IN	96 IN	120 IN	36 IN	54 IN	72 IN	96 IN	120 IN	36 IN	54 IN	72 IN	96 IN	120 IN	36 IN	54 IN	72 IN	96 IN	120 IN
PIPING/CONDUIT WEIGHT (LBS/FT)	10	A	B	B	D	D	A	B	B	D	D	A	B	B	D	DD	A	B	B	D	DD
	20	B	B	D	E	E	B	BB	D	E	EE	B	BB	D	E	EE	B	BB	D	E	EE
	30	B	D	DD	EE	J	B	D	E	EE	J	B	D	E	EE	J	BB	D	E	EE	J
	40	BB	D	E	G	J	BB	DD	EE	G	J	CC	DD	EE	G	J	D	DD	EE	G	J
	50	D	DD	EE	J	J	D	DD	EE	J	J	D	EE	G	J	J	D	EE	G	J	J
	60	D	EE	G	J	J	D	EE	G	J	J	D	EE	G	J	J	DD	EE	G	J	J
	70	D	EE	G	J	J	DD	EE	G	J	J	DD	G	J	J	J	DD	G	J	J	J
	80	DD	G	J	J	J	DD	G	J	J	J	DD	G	J	J	J	DD	G	J	J	J
	90	DD	G	J	J	J	DD	G	J	J	J	DD	G	J	J	J	EE	J	J	J	J
	100	DD	G	J	J	J	EE	G	J	J	J	EE	J	J	J	J	G	J	J	J	J
	150	G	J	J	J	K	G	J	J	K	K	J	J	J	K	K	J	J	J	K	K
	200	J	J	J	K	K	J	J	K	K	K	J	J	K	K	K	J	J	K	K	L
	300	J	K	K	K	L	J	K	K	L	L	J	K	K	L	L	J	K	K	L	L
	400	J	K	K	L	L	K	K	L	L	L	K	K	L	L	L	K	K	L	L	L
	600	K	L	L	L	L	K	L	L	L	L	K	L	L	L	L	K	L	L	L	L

NOTES:

1. REFER TO PAGE T2.0 FOR GENERAL NOTES.

OSHPD REVIEWED FOR CODE COMPLIANCE BY: JEFFREY T. KIKUMOTO DATE: 06/23/2016 OSHPD OPM-0043-13 CALIFORNIA BUILDING CODE 2013

MASON WEST, INC.
1601 E. Miraloma Ave. Placentia, CA 92870
TEL (714) 630 - 0701, www.masonwest.com

Jiefu "Jeff" Zhang, SE
California SE No. S5270

PAGE
T2.1

PIPING/CONDUIT	TRAPEZE SELECTION TABLES	LATERAL FORCE Fp = 0.375g (ASD) VERTICAL FORCE Fpv = 0.375g (ASD)

Fp = 0.375g Fpv = 0.375g		TRAPEZE SIZE DESIGNATION @ ALL-DIRECTIONAL AND LONGITUDINAL SEISMIC BRACE LOCATIONS																			
PIPING/CONDUIT SUPPORT AT 10'-0" MAX.		LONG. & ALL-DIR. SEISMIC LOCATION SPACING 10 FT					LONG. & ALL-DIR. SEISMIC LOCATION SPACING 20 FT					LONG. & ALL-DIR. SEISMIC LOCATION SPACING 30 FT					LONG. & ALL-DIR. SEISMIC LOCATION SPACING 40 FT				
		MAX TRAPEZE SPAN					MAX TRAPEZE SPAN					MAX TRAPEZE SPAN					MAX TRAPEZE SPAN				
		36 IN	54 IN	72 IN	96 IN	120 IN	36 IN	54 IN	72 IN	96 IN	120 IN	36 IN	54 IN	72 IN	96 IN	120 IN	36 IN	54 IN	72 IN	96 IN	120 IN
PIPING/CONDUIT WEIGHT (LBS/FT)	10	A	B	B	D	D	A	B	B	D	D	A	B	B	D	D	A	B	B	D	D
	20	B	B	D	DD	E	B	B	D	E	E	B	B	D	E	E	B	BB	D	E	EE
	30	B	D	D	E	J	B	D	DD	E	J	B	D	DD	E	J	B	D	E	EE	J
	40	B	D	E	E	J	B	D	E	EE	J	BB	D	E	G	J	BB	DD	EE	G	J
	50	BB	D	E	J	J	D	D	E	J	J	D	DD	EE	J	J	D	DD	EE	J	J
	60	D	D	E	J	J	D	E	EE	J	J	D	E	G	J	J	D	EE	G	J	J
	70	D	E	EE	J	J	D	E	G	J	J	D	EE	G	J	J	D	EE	G	J	J
	80	D	E	J	J	J	D	EE	J	J	J	D	EE	J	J	J	DD	G	J	J	J
	90	D	EE	J	J	J	D	G	J	J	J	DD	G	J	J	J	DD	G	J	J	J
	100	D	EE	J	J	J	DD	G	J	J	J	DD	G	J	J	J	EE	G	J	J	J
	150	EE	J	J	J	K	G	J	J	J	K	G	J	J	J	K	G	J	J	K	K
	200	G	J	J	K	K	G	J	J	K	K	J	J	J	K	K	J	J	K	K	K
	300	J	J	K	K	L	J	J	K	K	L	J	J	K	K	L	J	K	K	L	L
	400	J	J	K	K	L	J	K	K	L	L	J	K	K	L	L	K	K	L	L	L
	600	J	K	K	L	L	K	K	L	L	L	K	L	L	L	L	K	L	L	L	L

Fp = 0.375g Fpv = 0.375g		TRAPEZE SIZE DESIGNATION @ ALL-DIRECTIONAL AND LONGITUDINAL SEISMIC BRACE LOCATIONS																			
PIPING/CONDUIT SUPPORT AT 10'-0" MAX.		LONG. & ALL-DIR. SEISMIC LOCATION SPACING 50 FT					LONG. & ALL-DIR. SEISMIC LOCATION SPACING 60 FT					LONG. & ALL-DIR. SEISMIC LOCATION SPACING 70 FT					LONG. & ALL-DIR. SEISMIC LOCATION SPACING 80 FT				
		MAX TRAPEZE SPAN					MAX TRAPEZE SPAN					MAX TRAPEZE SPAN					MAX TRAPEZE SPAN				
		36 IN	54 IN	72 IN	96 IN	120 IN	36 IN	54 IN	72 IN	96 IN	120 IN	36 IN	54 IN	72 IN	96 IN	120 IN	36 IN	54 IN	72 IN	96 IN	120 IN
PIPING/CONDUIT WEIGHT (LBS/FT)	10	A	B	B	D	DD	A	B	B	D	DD	A	B	B	D	DD	A	B	BB	D	DD
	20	B	BB	D	E	EE	B	BB	DD	E	EE	B	BB	DD	EE	EE	B	CC	DD	EE	G
	30	BB	D	E	G	J	BB	D	E	G	J	BB	DD	EE	G	J	BB	DD	EE	G	J
	40	CC	DD	EE	G	J	D	DD	EE	G	J	D	DD	EE	G	J	D	EE	G	J	J
	50	D	EE	G	J	J	D	EE	G	J	J	DD	EE	G	J	J	DD	EE	J	J	J
	60	D	EE	G	J	J	DD	EE	J	J	J	DD	G	J	J	J	DD	G	J	J	J
	70	DD	G	J	J	J	DD	G	J	J	J	DD	G	J	J	J	EE	J	J	J	J
	80	DD	G	J	J	J	DD	J	J	J	J	EE	J	J	J	J	EE	J	J	J	K
	90	EE	J	J	J	J	EE	J	J	J	J	G	J	J	J	K	G	J	J	J	K
	100	EE	J	J	J	J	G	J	J	J	K	G	J	J	J	K	J	J	J	J	K
	150	J	J	J	K	K	J	J	J	K	K	J	J	K	K	K	J	J	K	K	L
	200	J	J	K	K	L	J	J	K	K	L	J	K	K	K	L	J	K	K	L	L
	300	J	K	K	L	L	J	K	L	L	L	K	K	L	L	L	K	K	L	L	L
	400	K	K	L	L	L	K	L	L	L	L	K	L	L	L	L	K	L	L	L	L
	600	K	L	L	L	L	L	L	L	L	L	L	L	L	L	N/A	L	L	L	L	N/A

NOTES:

1. REFER TO PAGE T2.0 FOR GENERAL NOTES.

OSHPD REVIEWED FOR CODE COMPLIANCE
OPM-0043-13
BY: JEFFREY KIKUMOTO
DATE: 06/23/2016
OSHPD BUILDING CODES

MASON WEST, INC.
1601 E. Miraloma Ave. Placentia, CA 92870
TEL (714) 630 - 0701, www.masonwest.com

Jiefu "Jeff" Zhang, SE
California SE No. S5270

PAGE
T2.2

PIPING/CONDUIT	TRAPEZE SELECTION TABLES	LATERAL FORCE Fp = 0.50g (ASD) VERTICAL FORCE Fpv = 0.375g (ASD)

Fp = 0.5g Fpv = 0.375g		TRAPEZE SIZE DESIGNATION @ ALL-DIRECTIONAL AND LONGITUDINAL SEISMIC BRACE LOCATIONS																			
PIPING/CONDUIT SUPPORT AT 10'-0" MAX.		LONG. & ALL-DIR. SEISMIC LOCATION SPACING 10 FT					LONG. & ALL-DIR. SEISMIC LOCATION SPACING 20 FT					LONG. & ALL-DIR. SEISMIC LOCATION SPACING 30 FT					LONG. & ALL-DIR. SEISMIC LOCATION SPACING 40 FT				
		MAX TRAPEZE SPAN					MAX TRAPEZE SPAN					MAX TRAPEZE SPAN					MAX TRAPEZE SPAN				
		36 IN	54 IN	72 IN	96 IN	120 IN	36 IN	54 IN	72 IN	96 IN	120 IN	36 IN	54 IN	72 IN	96 IN	120 IN	36 IN	54 IN	72 IN	96 IN	120 IN
PIPING/CONDUIT WEIGHT (LBS/FT)	10	A	B	B	D	D	A	B	B	D	D	A	B	B	D	D	A	B	B	D	DD
	20	B	B	D	DD	E	B	B	D	E	E	B	BB	D	E	EE	B	BB	D	E	EE
	30	B	D	D	E	J	B	D	DD	E	J	B	D	E	EE	J	BB	D	E	EE	J
	40	B	D	E	E	J	B	D	E	EE	J	BB	DD	EE	G	J	D	DD	EE	G	J
	50	BB	D	E	J	J	D	DD	EE	J	J	D	DD	EE	J	J	D	EE	G	J	J
	60	D	DD	EE	J	J	D	E	G	J	J	D	EE	G	J	J	DD	EE	G	J	J
	70	D	E	G	J	J	D	EE	G	J	J	DD	EE	G	J	J	DD	G	J	J	J
	80	D	E	J	J	J	D	EE	J	J	J	DD	G	J	J	J	DD	G	J	J	J
	90	D	EE	J	J	J	DD	G	J	J	J	DD	G	J	J	J	EE	J	J	J	J
	100	D	G	J	J	J	DD	G	J	J	J	EE	G	J	J	J	G	J	J	J	J
	150	G	J	J	J	K	G	J	J	J	K	G	J	J	K	K	J	J	J	K	K
	200	G	J	J	K	K	G	J	J	K	K	J	J	K	K	K	J	J	K	K	L
	300	J	J	K	K	L	J	J	K	K	L	J	K	K	L	L	J	K	K	L	L
	400	J	J	K	K	L	J	K	K	L	L	K	K	L	L	L	K	K	L	L	L
	600	J	K	L	L	L	K	K	L	L	L	K	L	L	L	L	K	L	L	L	L

Fp = 0.5g Fpv = 0.375g		TRAPEZE SIZE DESIGNATION @ ALL-DIRECTIONAL AND LONGITUDINAL SEISMIC BRACE LOCATIONS																			
PIPING/CONDUIT SUPPORT AT 10'-0" MAX.		LONG. & ALL-DIR. SEISMIC LOCATION SPACING 50 FT					LONG. & ALL-DIR. SEISMIC LOCATION SPACING 60 FT					LONG. & ALL-DIR. SEISMIC LOCATION SPACING 70 FT					LONG. & ALL-DIR. SEISMIC LOCATION SPACING 80 FT				
		MAX TRAPEZE SPAN					MAX TRAPEZE SPAN					MAX TRAPEZE SPAN					MAX TRAPEZE SPAN				
		36 IN	54 IN	72 IN	96 IN	120 IN	36 IN	54 IN	72 IN	96 IN	120 IN	36 IN	54 IN	72 IN	96 IN	120 IN	36 IN	54 IN	72 IN	96 IN	120 IN
PIPING/CONDUIT WEIGHT (LBS/FT)	10	A	B	B	D	DD	A	B	BB	D	DD	AA	B	BB	D	E	AA	B	BB	DD	E
	20	B	BB	D	E	EE	B	CC	DD	EE	G	B	BB	DD	EE	G	BB	D	DD	EE	G
	30	BB	D	E	G	J	BB	DD	EE	G	J	BB	DD	EE	G	J	CC	DD	EE	J	J
	40	CC	DD	EE	G	J	D	EE	G	J	J	DD	EE	G	J	J	DD	EE	G	J	J
	50	D	EE	G	J	J	DD	EE	J	J	J	DD	G	J	J	J	DD	G	J	J	J
	60	D	EE	G	J	J	DD	G	J	J	J	DD	J	J	J	J	EE	J	J	J	J
	70	DD	G	J	J	J	EE	G	J	J	J	EE	J	J	J	J	G	J	J	J	K
	80	DD	G	J	J	J	EE	J	J	J	K	G	J	J	J	K	G	J	J	K	K
	90	EE	J	J	J	J	G	J	J	J	K	J	J	J	J	K	J	J	J	K	K
	100	EE	J	J	J	J	J	J	J	K	K	J	J	J	J	K	J	J	J	K	K
	150	J	J	J	K	K	J	J	K	K	L	J	J	K	K	L	J	K	K	K	L
	200	J	J	K	K	L	J	K	K	L	L	J	K	K	L	L	J	K	K	L	L
	300	J	K	K	L	L	K	K	L	L	L	K	L	L	L	L	K	L	L	L	L
	400	K	K	L	L	L	K	L	L	L	L	K	L	L	L	L	K	L	L	L	L
	600	K	L	L	L	N/A	L	L	L	L	N/A	L	L	L	N/A	N/A	L	L	L	N/A	N/A

OSHPD
OPM-0043-13
REVIEWED FOR CODE COMPLIANCE
BY: JEFFREY T. KIKUMOTO
DATE: 06/23/2016
OSHPD CALIFORNIA BUILDING CODE 2013

NOTES:

1. REFER TO PAGE T2.0 FOR GENERAL NOTES.

MASON WEST, INC.
1601 E. Miraloma Ave. Placentia, CA 92870
TEL (714) 630 - 0701, www.masonwest.com

Jiefu "Jeff" Zhang, SE
California SE No. S5270

PAGE
T2.3

PIPING/CONDUIT	TRAPEZE SELECTION TABLES	LATERAL FORCE Fp = 0.625g (ASD) VERTICAL FORCE Fpv = 0.375g (ASD)

Fp = 0.625g Fpv = 0.375g		TRAPEZE SIZE DESIGNATION @ ALL-DIRECTIONAL AND LONGITUDINAL SEISMIC BRACE LOCATIONS																			
PIPING/CONDUIT SUPPORT AT 10'-0" MAX.		LONG. & ALL-DIR. SEISMIC LOCATION SPACING 10 FT					LONG. & ALL-DIR. SEISMIC LOCATION SPACING 20 FT					LONG. & ALL-DIR. SEISMIC LOCATION SPACING 30 FT					LONG. & ALL-DIR. SEISMIC LOCATION SPACING 40 FT				
		MAX TRAPEZE SPAN					MAX TRAPEZE SPAN					MAX TRAPEZE SPAN					MAX TRAPEZE SPAN				
		36 IN	54 IN	72 IN	96 IN	120 IN	36 IN	54 IN	72 IN	96 IN	120 IN	36 IN	54 IN	72 IN	96 IN	120 IN	36 IN	54 IN	72 IN	96 IN	120 IN
PIPING/CONDUIT WEIGHT (LBS/FT)	10	A	B	B	D	D	A	B	B	D	D	A	B	B	D	DD	A	B	B	D	DD
	20	B	B	D	E	E	B	B	D	E	E	B	BB	D	E	EE	B	BB	DD	EE	EE
	30	B	D	D	E	J	B	D	DD	EE	J	BB	D	E	EE	J	BB	DD	EE	G	J
	40	B	D	E	EE	J	BB	D	E	G	J	CC	DD	EE	G	J	D	DD	EE	G	J
	50	D	D	E	J	J	D	DD	EE	J	J	D	EE	G	J	J	D	EE	G	J	J
	60	D	DD	EE	J	J	D	EE	G	J	J	D	EE	G	J	J	DD	G	J	J	J
	70	D	E	G	J	J	D	EE	G	J	J	DD	G	J	J	J	DD	G	J	J	J
	80	D	EE	J	J	J	DD	G	J	J	J	DD	G	J	J	J	EE	J	J	J	J
	90	D	EE	J	J	J	DD	G	J	J	J	EE	J	J	J	J	G	J	J	J	K
	100	D	G	J	J	J	DD	G	J	J	J	EE	J	J	J	J	G	J	J	J	K
	150	G	J	J	J	K	G	J	J	J	K	J	J	J	K	K	J	J	K	K	K
	200	G	J	J	K	K	J	J	J	K	K	J	J	K	K	L	J	K	K	K	L
	300	J	J	K	K	L	J	K	K	K	L	J	K	K	L	L	K	K	L	L	L
	400	J	K	K	K	L	J	K	K	L	L	K	K	L	L	L	K	L	L	L	L
	600	K	K	L	L	L	K	L	L	L	L	K	L	L	L	L	L	L	L	L	N/A

Fp = 0.625g Fpv = 0.375g		TRAPEZE SIZE DESIGNATION @ ALL-DIRECTIONAL AND LONGITUDINAL SEISMIC BRACE LOCATIONS																			
PIPING/CONDUIT SUPPORT AT 10'-0" MAX.		LONG. & ALL-DIR. SEISMIC LOCATION SPACING 50 FT					LONG. & ALL-DIR. SEISMIC LOCATION SPACING 60 FT					LONG. & ALL-DIR. SEISMIC LOCATION SPACING 70 FT					LONG. & ALL-DIR. SEISMIC LOCATION SPACING 80 FT				
		MAX TRAPEZE SPAN					MAX TRAPEZE SPAN					MAX TRAPEZE SPAN					MAX TRAPEZE SPAN				
		36 IN	54 IN	72 IN	96 IN	120 IN	36 IN	54 IN	72 IN	96 IN	120 IN	36 IN	54 IN	72 IN	96 IN	120 IN	36 IN	54 IN	72 IN	96 IN	120 IN
PIPING/CONDUIT WEIGHT (LBS/FT)	10	A	B	BB	D	DD	AA	B	BB	D	E	AA	B	BB	DD	EE	AA	B	BB	DD	EE
	20	B	CC	DD	EE	G	BB	CC	DD	EE	G	BB	D	DD	EE	G	BB	DD	EE	G	J
	30	BB	DD	EE	G	J	CC	DD	EE	G	J	D	DD	EE	J	J	D	EE	G	J	J
	40	D	EE	G	J	J	DD	EE	G	J	J	DD	G	J	J	J	DD	G	J	J	J
	50	DD	EE	J	J	J	DD	G	J	J	J	DD	G	J	J	J	DD	J	J	J	J
	60	DD	G	J	J	J	DD	J	J	J	J	EE	J	J	J	K	G	J	J	J	K
	70	EE	J	J	J	J	EE	J	J	J	K	G	J	J	J	K	J	J	J	K	K
	80	G	J	J	J	K	G	J	J	J	K	J	J	J	K	K	J	J	J	K	K
	90	G	J	J	J	K	J	J	J	K	K	J	J	J	K	K	J	J	K	K	K
	100	J	J	J	K	K	J	J	J	K	K	J	J	K	K	K	J	J	K	K	K
	150	J	J	K	K	L	J	K	K	K	L	J	K	K	L	L	J	K	K	L	L
	200	J	K	K	L	L	J	K	K	L	L	K	K	L	L	L	K	K	L	L	L
	300	K	K	L	L	L	K	L	L	L	L	K	L	L	L	L	K	L	L	L	L
	400	K	L	L	L	L	K	L	L	L	L	L	L	L	L	N/A	L	L	L	L	N/A
	600	L	L	L	L	N/A	L	L	L	N/A	N/A	L	L	L	N/A	N/A	L	L	N/A	N/A	N/A

NOTES:

1. REFER TO PAGE T2.0 FOR GENERAL NOTES.

OSHPD PREAPPROVED FOR CODE COMPLIANCE
OPM-0043-13
DATE: 06/23/2016
CALIFORNIA BUILDING CODE 2013

MASON WEST, INC.
1601 E. Miraloma Ave. Placentia, CA 92870
TEL (714) 630 - 0701, www.masonwest.com

Jiefu "Jeff" Zhang, SE
California SE No. S5270

PAGE
T2.4

PIPING/CONDUIT	TRAPEZE SELECTION TABLES	LATERAL FORCE Fp = 0.75g (ASD) VERTICAL FORCE Fpv = 0.375g (ASD)

Fp = 0.75g Fpv = 0.375g		TRAPEZE SIZE DESIGNATION @ ALL-DIRECTIONAL AND LONGITUDINAL SEISMIC BRACE LOCATIONS																			
PIPING/CONDUIT SUPPORT AT 10'-0" MAX.		LONG. & ALL-DIR. SEISMIC LOCATION SPACING 10 FT					LONG. & ALL-DIR. SEISMIC LOCATION SPACING 20 FT					LONG. & ALL-DIR. SEISMIC LOCATION SPACING 30 FT					LONG. & ALL-DIR. SEISMIC LOCATION SPACING 40 FT				
		MAX TRAPEZE SPAN					MAX TRAPEZE SPAN					MAX TRAPEZE SPAN					MAX TRAPEZE SPAN				
		36 IN	54 IN	72 IN	96 IN	120 IN	36 IN	54 IN	72 IN	96 IN	120 IN	36 IN	54 IN	72 IN	96 IN	120 IN	36 IN	54 IN	72 IN	96 IN	120 IN
PIPING/CONDUIT WEIGHT (LBS/FT)	10	A	B	B	D	D	A	B	B	D	D	A	B	B	D	DD	A	B	BB	D	DD
	20	B	B	D	E	E	B	BB	D	E	EE	B	BB	D	E	EE	B	CC	DD	EE	G
	30	B	D	DD	E	J	B	D	E	EE	J	BB	D	E	EE	J	BB	DD	EE	G	J
	40	B	D	E	EE	J	BB	DD	EE	G	J	D	DD	EE	G	J	D	EE	G	J	J
	50	D	D	E	J	J	D	DD	EE	J	J	D	EE	G	J	J	DD	EE	J	J	J
	60	D	DD	EE	J	J	D	EE	G	J	J	DD	EE	J	J	J	DD	G	J	J	J
	70	D	E	G	J	J	DD	EE	G	J	J	DD	G	J	J	J	EE	J	J	J	J
	80	D	EE	J	J	J	DD	G	J	J	J	DD	J	J	J	J	EE	J	J	J	K
	90	D	G	J	J	J	DD	G	J	J	J	EE	J	J	J	J	G	J	J	J	K
	100	DD	G	J	J	J	EE	G	J	J	J	G	J	J	J	K	J	J	J	K	K
	150	G	J	J	J	K	G	J	J	K	K	J	J	J	K	K	J	J	K	K	L
	200	G	J	J	K	K	J	J	K	K	K	J	J	K	K	L	J	K	K	L	L
	300	J	J	K	K	L	J	K	K	L	L	J	K	L	L	L	K	K	L	L	L
	400	J	K	K	L	L	K	K	L	L	L	K	L	L	L	L	K	L	L	L	L
	600	K	K	L	L	L	K	L	L	L	L	L	L	L	L	L	L	L	L	L	N/A

Fp = 0.75g Fpv = 0.375g		TRAPEZE SIZE DESIGNATION @ ALL-DIRECTIONAL AND LONGITUDINAL SEISMIC BRACE LOCATIONS																			
PIPING/CONDUIT SUPPORT AT 10'-0" MAX.		LONG. & ALL-DIR. SEISMIC LOCATION SPACING 50 FT					LONG. & ALL-DIR. SEISMIC LOCATION SPACING 60 FT					LONG. & ALL-DIR. SEISMIC LOCATION SPACING 70 FT					LONG. & ALL-DIR. SEISMIC LOCATION SPACING 80 FT				
		MAX TRAPEZE SPAN					MAX TRAPEZE SPAN					MAX TRAPEZE SPAN					MAX TRAPEZE SPAN				
		36 IN	54 IN	72 IN	96 IN	120 IN	36 IN	54 IN	72 IN	96 IN	120 IN	36 IN	54 IN	72 IN	96 IN	120 IN	36 IN	54 IN	72 IN	96 IN	120 IN
PIPING/CONDUIT WEIGHT (LBS/FT)	10	AA	B	BB	DD	E	AA	B	BB	DD	EE	AA	BB	BB	DD	EE	AA	BB	CC	DD	EE
	20	BB	CC	DD	EE	G	BB	D	EE	EE	G	BB	DD	EE	G	J	BB	DD	EE	G	J
	30	CC	DD	EE	G	J	D	DD	EE	J	J	DD	EE	G	J	J	DD	EE	J	J	J
	40	DD	EE	G	J	J	DD	EE	J	J	J	DD	G	J	J	J	DD	J	J	J	J
	50	DD	G	J	J	J	DD	J	J	J	J	EE	J	J	J	J	EE	J	J	J	K
	60	DD	J	J	J	J	EE	J	J	J	K	G	J	J	J	K	J	J	J	K	K
	70	EE	J	J	J	K	G	J	J	J	K	J	J	J	K	K	J	J	J	K	K
	80	G	J	J	J	K	J	J	J	K	K	J	J	J	K	K	J	J	K	K	K
	90	J	J	J	K	K	J	J	J	K	K	J	J	K	K	K	J	J	K	K	L
	100	J	J	J	K	K	J	J	K	K	K	J	J	K	K	L	J	J	K	K	L
	150	J	K	K	K	L	J	K	K	L	L	J	K	K	L	L	J	K	L	L	L
	200	J	K	K	L	L	K	K	L	L	L	K	K	L	L	L	K	L	L	L	L
	300	K	L	L	L	L	K	L	L	L	L	K	L	L	L	L	L	L	L	L	L
	400	K	L	L	L	L	L	L	L	L	N/A	L	L	L	L	N/A	L	L	L	N/A	N/A
	600	L	L	L	N/A	N/A	L	L	L	N/A	N/A	L	L	N/A	N/A	N/A	L	L	N/A	N/A	N/A

OPM-0043-13
Reviewed by Jeffrey K. Kikumoto
06/23/2016
PREVIEWED FOR CODE COMPLIANCE
CALIFORNIA BUILDING CODE

NOTES:

1. REFER TO PAGE T2.0 FOR GENERAL NOTES.

MASON WEST, INC.
1601 E. Miraloma Ave. Placentia, CA 92870
TEL (714) 630 - 0701, www.masonwest.com

Jiefu "Jeff" Zhang, SE
California SE No. S5270

PAGE
T2.5

PIPING/CONDUIT	TRAPEZE SELECTION TABLES	LATERAL FORCE Fp = 0.875g (ASD) VERTICAL FORCE Fpv = 0.375g (ASD)

Fp = 0.875g Fpv = 0.375g		TRAPEZE SIZE DESIGNATION @ ALL-DIRECTIONAL AND LONGITUDINAL SEISMIC BRACE LOCATIONS																			
PIPING/CONDUIT SUPPORT AT 10'-0" MAX.		LONG. & ALL-DIR. SEISMIC LOCATION SPACING 10 FT					LONG. & ALL-DIR. SEISMIC LOCATION SPACING 20 FT					LONG. & ALL-DIR. SEISMIC LOCATION SPACING 30 FT					LONG. & ALL-DIR. SEISMIC LOCATION SPACING 40 FT				
		MAX TRAPEZE SPAN					MAX TRAPEZE SPAN					MAX TRAPEZE SPAN					MAX TRAPEZE SPAN				
		36 IN	54 IN	72 IN	96 IN	120 IN	36 IN	54 IN	72 IN	96 IN	120 IN	36 IN	54 IN	72 IN	96 IN	120 IN	36 IN	54 IN	72 IN	96 IN	120 IN
PIPING/CONDUIT WEIGHT (LBS/FT)	10	A	B	B	D	D	A	B	B	D	DD	A	B	B	D	DD	AA	B	BB	D	E
	20	B	B	D	E	E	B	BB	D	E	EE	B	BB	DD	EE	EE	B	CC	DD	EE	G
	30	B	D	DD	E	J	B	D	E	EE	J	BB	DD	EE	G	J	BB	DD	EE	G	J
	40	BB	D	E	EE	J	CC	DD	EE	G	J	D	DD	EE	G	J	DD	EE	G	J	J
	50	D	DD	EE	J	J	D	EE	G	J	J	DD	EE	G	J	J	DD	G	J	J	J
	60	D	E	EE	J	J	D	EE	G	J	J	DD	G	J	J	J	DD	J	J	J	J
	70	D	EE	G	J	J	DD	G	J	J	J	DD	G	J	J	J	EE	J	J	J	J
	80	D	EE	J	J	J	DD	G	J	J	J	E	J	J	J	J	G	J	J	J	K
	90	D	G	J	J	J	DD	G	J	J	J	G	J	J	J	K	J	J	J	K	K
	100	DD	G	J	J	J	EE	J	J	J	J	G	J	J	J	K	J	J	J	K	K
	150	G	J	J	J	K	J	J	J	K	K	J	J	K	K	K	J	J	K	K	L
	200	J	J	J	K	K	J	J	K	K	K	J	K	K	K	L	J	K	K	L	L
	300	J	J	K	K	L	J	K	K	L	L	K	K	L	L	L	K	L	L	L	L
	400	J	K	K	L	L	K	K	L	L	L	K	L	L	L	L	K	L	L	L	L
	600	K	K	L	L	L	K	L	L	L	L	L	L	L	L	N/A	L	L	L	N/A	N/A

Fp = 0.875g Fpv = 0.375g		TRAPEZE SIZE DESIGNATION @ ALL-DIRECTIONAL AND LONGITUDINAL SEISMIC BRACE LOCATIONS																			
PIPING/CONDUIT SUPPORT AT 10'-0" MAX.		LONG. & ALL-DIR. SEISMIC LOCATION SPACING 50 FT					LONG. & ALL-DIR. SEISMIC LOCATION SPACING 60 FT					LONG. & ALL-DIR. SEISMIC LOCATION SPACING 70 FT					LONG. & ALL-DIR. SEISMIC LOCATION SPACING 80 FT				
		MAX TRAPEZE SPAN					MAX TRAPEZE SPAN					MAX TRAPEZE SPAN					MAX TRAPEZE SPAN				
		36 IN	54 IN	72 IN	96 IN	120 IN	36 IN	54 IN	72 IN	96 IN	120 IN	36 IN	54 IN	72 IN	96 IN	120 IN	36 IN	54 IN	72 IN	96 IN	120 IN
PIPING/CONDUIT WEIGHT (LBS/FT)	10	AA	B	BB	DD	EE	AA	BB	BB	DD	EE	AA	BB	CC	DD	EE	B	BB	CC	DD	EE
	20	BB	D	DD	EE	G	BB	DD	EE	G	J	BB	DD	EE	G	J	BB	DD	EE	J	J
	30	D	DD	EE	J	J	DD	EE	G	J	J	DD	EE	J	J	J	DD	EE	J	J	J
	40	DD	EE	J	J	J	DD	G	J	J	J	DD	J	J	J	J	EE	J	J	J	J
	50	DD	G	J	J	J	EE	J	J	J	J	EE	J	J	J	K	G	J	J	J	K
	60	EE	J	J	J	K	G	J	J	J	K	J	J	J	K	K	J	J	J	K	K
	70	G	J	J	J	K	J	J	J	K	K	J	J	J	K	K	J	J	K	K	K
	80	J	J	J	K	K	J	J	J	K	K	J	J	K	K	K	J	J	K	K	L
	90	J	J	J	K	K	J	J	K	K	K	J	J	K	K	L	J	J	K	K	L
	100	J	J	K	K	K	J	J	K	K	L	J	J	K	K	L	J	K	K	L	L
	150	J	K	K	L	L	J	K	K	L	L	J	K	L	L	L	K	K	L	L	L
	200	K	K	L	L	L	K	K	L	L	L	K	L	L	L	L	K	L	L	L	L
	300	K	L	L	L	L	K	L	L	L	L	L	L	L	L	N/A	L	L	L	L	N/A
	400	L	L	L	L	N/A	L	L	L	L	N/A	L	L	L	N/A	N/A	L	L	L	N/A	N/A
	600	L	L	L	N/A	N/A	L	L	N/A	N/A	N/A	L	L	N/A	N/A	N/A	L	N/A	N/A	N/A	N/A

NOTES:

1. **REFER TO PAGE T2.0 FOR GENERAL NOTES.**

OSHPD
REVIEWED FOR CODE COMPLIANCE
OPM-0043-13
BY:
DATE: 06/23/2016
CALIFORNIA BUILDING CODE

MASON WEST, INC.
1601 E. Miraloma Ave. Placentia, CA 92870
TEL (714) 630 - 0701, www.masonwest.com

Jiefu "Jeff" Zhang, SE
California SE No. S5270

PAGE
T2.6

PIPING/CONDUIT	TRAPEZE SELECTION TABLES	LATERAL FORCE Fp = 1.00g (ASD) VERTICAL FORCE Fpv = 0.375g (ASD)

Fp = 1g Fpv = 0.375g		TRAPEZE SIZE DESIGNATION @ ALL-DIRECTIONAL AND LONGITUDINAL SEISMIC BRACE LOCATIONS																			
PIPING/CONDUIT SUPPORT AT 10'-0" MAX.		LONG. & ALL-DIR. SEISMIC LOCATION SPACING 10 FT					LONG. & ALL-DIR. SEISMIC LOCATION SPACING 20 FT					LONG. & ALL-DIR. SEISMIC LOCATION SPACING 30 FT					LONG. & ALL-DIR. SEISMIC LOCATION SPACING 40 FT				
		MAX TRAPEZE SPAN					MAX TRAPEZE SPAN					MAX TRAPEZE SPAN					MAX TRAPEZE SPAN				
		36 IN	54 IN	72 IN	96 IN	120 IN	36 IN	54 IN	72 IN	96 IN	120 IN	36 IN	54 IN	72 IN	96 IN	120 IN	36 IN	54 IN	72 IN	96 IN	120 IN
PIPING/CONDUIT WEIGHT (LBS/FT)	10	A	B	B	D	D	A	B	B	D	DD	A	B	BB	D	DD	AA	B	BB	DD	E
	20	B	B	D	E	E	B	BB	D	E	EE	B	CC	DD	EE	G	BB	D	DD	EE	G
	30	B	D	DD	E	J	BB	D	E	EE	J	BB	DD	EE	G	J	CC	DD	EE	J	J
	40	BB	D	E	EE	J	D	DD	EE	G	J	D	EE	G	J	J	DD	EE	G	J	J
	50	D	DD	EE	J	J	D	EE	G	J	J	DD	EE	J	J	J	DD	G	J	J	J
	60	D	E	G	J	J	DD	EE	G	J	J	DD	G	J	J	J	EE	J	J	J	J
	70	D	EE	G	J	J	DD	G	J	J	J	EE	J	J	J	J	G	J	J	J	K
	80	D	EE	J	J	J	DD	G	J	J	J	EE	J	J	J	J	G	J	J	K	K
	90	DD	G	J	J	J	EE	J	J	J	J	G	J	J	J	K	J	J	J	K	K
	100	DD	G	J	J	J	G	J	J	J	J	J	J	J	K	K	J	J	J	K	K
	150	G	J	J	J	K	J	J	J	K	K	J	J	K	K	L	J	K	K	K	L
	200	J	J	J	K	K	J	J	K	K	L	J	K	K	L	L	J	K	K	L	L
	300	J	J	K	K	L	J	K	K	L	L	K	K	L	L	L	K	L	L	L	L
	400	J	K	K	L	L	K	K	L	L	L	K	L	L	L	L	K	L	L	L	L
	600	K	K	L	L	L	K	L	L	L	L	L	L	L	L	N/A	L	L	L	N/A	N/A

Fp = 1g Fpv = 0.375g		TRAPEZE SIZE DESIGNATION @ ALL-DIRECTIONAL AND LONGITUDINAL SEISMIC BRACE LOCATIONS																			
PIPING/CONDUIT SUPPORT AT 10'-0" MAX.		LONG. & ALL-DIR. SEISMIC LOCATION SPACING 50 FT					LONG. & ALL-DIR. SEISMIC LOCATION SPACING 60 FT					LONG. & ALL-DIR. SEISMIC LOCATION SPACING 70 FT					LONG. & ALL-DIR. SEISMIC LOCATION SPACING 80 FT				
		MAX TRAPEZE SPAN					MAX TRAPEZE SPAN					MAX TRAPEZE SPAN					MAX TRAPEZE SPAN				
		36 IN	54 IN	72 IN	96 IN	120 IN	36 IN	54 IN	72 IN	96 IN	120 IN	36 IN	54 IN	72 IN	96 IN	120 IN	36 IN	54 IN	72 IN	96 IN	120 IN
PIPING/CONDUIT WEIGHT (LBS/FT)	10	AA	B	BB	DD	EE	AA	BB	CC	DD	EE	B	BB	CC	DD	EE	B	BB	DD	EE	EE
	20	BB	DD	EE	G	J	BB	DD	EE	G	J	BB	DD	EE	J	J	CC	DD	EE	J	J
	30	D	EE	G	J	J	DD	EE	J	J	J	DD	EE	J	J	J	DD	G	J	J	J
	40	DD	G	J	J	J	DD	J	J	J	J	DD	J	J	J	J	EE	J	J	J	K
	50	DD	J	J	J	J	EE	J	J	J	K	G	J	J	J	K	J	J	J	K	K
	60	G	J	J	J	K	J	J	J	K	K	J	J	J	K	K	J	J	J	K	K
	70	J	J	J	K	K	J	J	J	K	K	J	J	K	K	K	J	J	K	K	L
	80	J	J	J	K	K	J	J	K	K	K	J	J	K	K	L	J	J	K	K	L
	90	J	J	K	K	K	J	J	K	K	L	J	J	K	K	L	J	K	K	L	L
	100	J	J	K	K	K	J	J	K	K	L	J	K	K	L	L	J	K	K	L	L
	150	J	K	K	K	L	J	K	L	L	L	K	K	L	L	L	K	K	L	L	L
	200	K	K	L	L	L	K	L	L	L	L	K	L	L	L	L	K	L	L	L	L
	300	K	L	L	L	L	L	L	L	L	N/A	L	L	L	L	N/A	L	L	L	N/A	N/A
	400	L	L	L	L	N/A	L	L	L	N/A	N/A	L	L	L	N/A	N/A	L	L	N/A	N/A	N/A
	600	L	L	N/A	N/A	N/A	L	L	N/A	N/A	N/A	L	N/A	N/A	N/A	N/A	L	N/A	N/A	N/A	N/A

NOTES:

1. REFER TO PAGE T2.0 FOR GENERAL NOTES.

OSHPD REVIEWED FOR CODE COMPLIANCE
OPM-0043-13
BY:
DATE: 06/23/2016
CALIFORNIA BUILDING CODE 2013

MASON WEST, INC.
1601 E. Miraloma Ave. Placentia, CA 92870
TEL (714) 630 - 0701, www.masonwest.com

Jiefu "Jeff" Zhang, SE
California SE No. S5270

PAGE
T2.7

CABLE TRAY	TRAPEZE SELECTION TABLES	VERTICAL FORCE Fpv = 0.375g (ASD)

Fpv = 0.375g		TRAPEZE SIZE DESIGNATION @ TRANSVERSE SEISMIC BRACE LOCATIONS				
CABLE TRAY SUPPORT AT 10'-0" MAX.		MAX TRAPEZE SPAN				
		18 IN	24 IN	36 IN	48 IN	60 IN
CABLE TRAY WEIGHT (LBS/FT)	10	A	A	A	A	A
	20	A	A	A	A	A
	30	A	A	A	A	A
	40	B	B	B	B	B
	50	B	B	B	B	B
	60	B	B	B	B	B
	70	B	B	B	B	B
	80	B	B	B	B	B
	90	B	B	B	B	B
	100	D	D	D	D	D

NOTES:

1. REFER TO TABLE BELOW FOR TRAPEZE MEMBER SIZE DESIGNATIONS & ALLOWABLE MOMENT CAPACITIES.
2. STEEL ANGLE MAY BE USED IN PLACE OF CHANNEL STRUT. FOR 1⅝"x1⅝"x12 GA SINGLE STRUT, USE L2½x2½x¼. FOR 1⅝"x3¼"x12 GA SINGLE STRUT, USE L3x3x¼. FOR 1⅝"x1⅝"x12 GA SINGLE STRUT CONTRACTOR MAY USE 1⅝x$^{13}/_{16}$x12GA DOUBLE STRUT AS A SUBSTITUTION.
3. TRAPEZE MEMBERS MAY BE PROVIDED WITH ROUND HOLES. REFER TO X7.0 AND X7.1 FOR STRUT MEMBER DATA.
4. MAXIMUM SPAN OF TRAPEZE MEMBER IS MEASURED BETWEEN CENTER OF HANGER RODS.
5. CONTRACTOR MAY USE ANY TRAPEZE MEMBER SIZE LARGER THAN IS TABULATED. FOR EXAMPLE, IF TRAPEZE MEMBER SIZE "A" IS THE MINIMUM REQUIREMENT, THEN TRAPEZE MEMBER AA, B, BB, C, CC, D, DD, E, OR EE CAN ALSO BE USED.
6. WHEN INCREASING DISTANCE FROM EDGE OF CABLE TRAY TO CENTER OF HANGER ROD MORE THAN 6", INCREASE THE WEIGHT PER FOOT BY A FACTOR OF INCREASED EDGE DISTANCE DIVIDED BY 6". FOR EXAMPLE, A 12" CABLE TRAY WEIGHING 9 LB/FT WITH AN EDGE DISTANCE OF 12" MUST INCREASE THE WEIGHT BY A FACTOR OF 2 (12"/6") TO USE THE ABOVE TABLE.

TRAPEZE MEMBER TABLE

		ALLOWABLE MOMENT CAPACITY (KIP-IN)									
		18" SPAN		24" SPAN		36" SPAN		48" SPAN		60" SPAN	
DESIGNATION	SIZE	Mcx	Mcy	Mcx	Mcy	Mcx	Mcy	Mcx	Mcy	Mcx	Mcy
A	13/16 x 1 5/8 x 12GA SINGLE STRUT	1.61	4.33	1.61	4.31	1.61	3.94	1.61	3.58	1.59	3.23
AA	(2) 13/16 x 1 5/8 x 12GA SINGLE STRUT	1.61	8.66	1.61	8.62	1.61	7.88	1.61	7.16	1.59	6.46
B	1 5/8 x 1 5/8 x 12GA SINGLE STRUT	5.19	6.57	5.19	6.57	4.76	6.57	4.39	6.52	4.09	6.23
C	13/16 x 1 5/8 x 12GA DOUBLE STRUT	4.58	8.67	4.58	8.67	4.58	8.50	4.58	8.04	4.58	7.58
BB	(2) 1 5/8 x 1 5/8 x 12GA SINGLE STRUT	5.19	13.14	5.19	13.14	4.76	13.14	4.39	13.04	4.09	12.46
CC	(2) 13/16 x 1 5/8 x 12GA DOUBLE STRUT	4.58	17.34	4.58	17.34	4.58	17.00	4.58	16.08	4.58	15.16
D	1 5/8 x 3 1/4 x 12GA SINGLE STRUT	16.08	11.11	15.61	11.11	13.26	11.11	10.59	11.11	8.03	11.11
E	1 5/8 x 1 5/8 x 12GA DOUBLE STRUT	14.82	13.13	14.82	13.13	14.82	13.13	14.72	13.13	14.09	13.13
DD	(2) 1 5/8 x 3 1/4 x 12GA SINGLE STRUT	16.08	22.22	15.61	22.22	13.26	22.22	10.59	22.22	8.03	22.22
EE	(2) 1 5/8 x 1 5/8 x 12GA DOUBLE STRUT	14.82	26.26	14.82	26.26	14.82	26.26	14.72	26.26	14.09	26.26

APPROVED FOR CODE COMPLIANCE
DATE: 06/23/2016
CALIFORNIA BUILDING CODE, 2013
OPM-0043-13: Reviewed for Code Compliance by Jeffrey Kikumoto

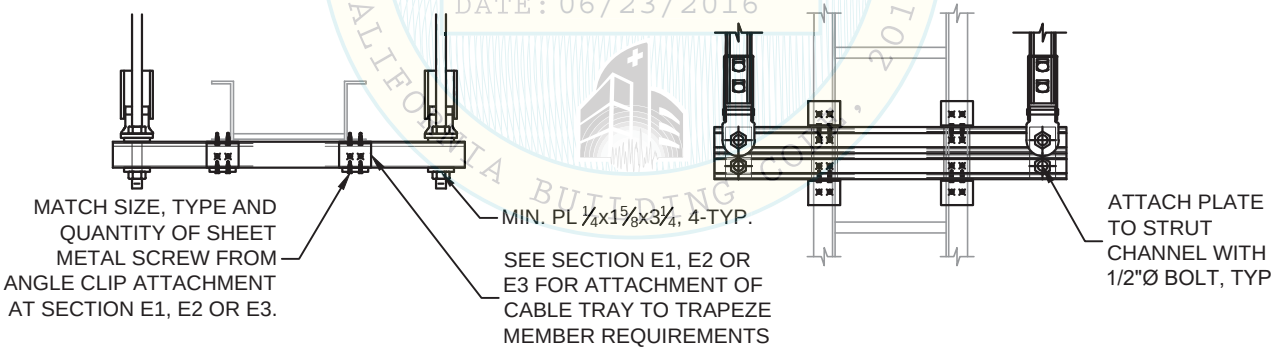

ELEVATION VIEW PLAN VIEW

(2) TRAPEZE MEMBER INSTALLATION DETAIL FOR TRAPEZE MEMBER DESIGNATION AA, BB, CC,DD & EE

MASON WEST, INC.
1601 E. Miraloma Ave. Placentia, CA 92870
TEL (714) 630 - 0701, www.masonwest.com

Jiefu "Jeff" Zhang, SE
California SE No. S5270

PAGE
T3.0

CABLE TRAY	TRAPEZE SELECTION TABLES	LATERAL FORCE Fp = 0.25g (ASD) VERTICAL FORCE Fpv = 0.375g (ASD)

Fp = 0.25g Fpv = 0.375g		TRAPEZE SIZE DESIGNATION @ ALL-DIRECTIONAL AND LONGITUDINAL SEISMIC BRACE LOCATIONS																			
CABLE TRAY SUPPORT AT 10'-0" MAX.		LONG. & ALL-DIR. SEISMIC LOCATION SPACING 10 FT					LONG. & ALL-DIR. SEISMIC LOCATION SPACING 20 FT					LONG. & ALL-DIR. SEISMIC LOCATION SPACING 30 FT					LONG. & ALL-DIR. SEISMIC LOCATION SPACING 40 FT				
		MAX TRAPEZE SPAN					MAX TRAPEZE SPAN					MAX TRAPEZE SPAN					MAX TRAPEZE SPAN				
		18 IN	24 IN	36 IN	48 IN	60 IN	18 IN	24 IN	36 IN	48 IN	60 IN	18 IN	24 IN	36 IN	48 IN	60 IN	18 IN	24 IN	36 IN	48 IN	60 IN
CABLE TRAY WEIGHT (LBS/FT)	10	A	A	A	A	A	A	A	A	A	A	A	A	A	A	A	A	A	A	A	A
	20	A	A	A	A	A	A	A	A	A	A	A	A	A	A	A	A	A	A	A	A
	30	A	A	A	A	A	A	A	A	A	A	A	A	A	A	A	A	A	A	AA	AA
	40	B	B	B	B	B	B	B	B	B	B	B	B	B	B	B	B	B	B	B	B
	50	B	B	B	B	B	B	B	B	B	B	B	B	B	B	B	B	B	B	B	B
	60	B	B	B	B	B	B	B	B	B	B	B	B	B	B	B	B	B	B	B	B
	70	B	B	B	B	B	B	B	B	B	B	B	B	B	B	B	B	B	B	B	BB
	80	B	B	B	B	B	B	B	B	B	B	B	B	B	C	C	C	C	BB	BB	BB
	90	B	B	B	B	C	B	B	B	C	C	BB	BB	BB	CC	CC	CC	CC	CC	CC	CC
	100	D	D	D	D	D	D	D	D	D	D	D	D	D	D	D	D	D	D	D	E

Fp = 0.25g Fpv = 0.375g		TRAPEZE SIZE DESIGNATION @ ALL-DIRECTIONAL AND LONGITUDINAL SEISMIC BRACE LOCATIONS																			
CABLE TRAY SUPPORT AT 10'-0" MAX.		LONG. & ALL-DIR. SEISMIC LOCATION SPACING 50 FT					LONG. & ALL-DIR. SEISMIC LOCATION SPACING 60 FT					LONG. & ALL-DIR. SEISMIC LOCATION SPACING 70 FT					LONG. & ALL-DIR. SEISMIC LOCATION SPACING 80 FT				
		MAX TRAPEZE SPAN					MAX TRAPEZE SPAN					MAX TRAPEZE SPAN					MAX TRAPEZE SPAN				
		18 IN	24 IN	36 IN	48 IN	60 IN	18 IN	24 IN	36 IN	48 IN	60 IN	18 IN	24 IN	36 IN	48 IN	60 IN	18 IN	24 IN	36 IN	48 IN	60 IN
CABLE TRAY WEIGHT (LBS/FT)	10	A	A	A	A	A	A	A	A	A	A	A	A	A	A	A	A	A	A	A	A
	20	A	A	A	A	A	A	A	A	A	A	A	A	A	A	A	A	A	A	A	A
	30	AA	AA	AA	AA	AA	AA	AA	AA	AA	AA	AA	AA	AA	AA	B	B	B	B	B	B
	40	B	B	B	B	B	B	B	B	B	B	B	B	B	B	B	B	B	B	B	B
	50	B	B	B	B	B	B	B	B	B	B	B	B	B	B	B	B	B	B	B	B
	60	B	B	B	B	B	B	B	B	B	C	B	B	B	C	C	C	C	C	C	BB
	70	B	B	C	C	C	C	C	BB	BB	BB	BB	BB	BB	BB	CC	CC	CC	CC	CC	CC
	80	BB	BB	BB	BB	CC	BB	BB	BB	CC	CC	BB	BB	CC	CC	CC	CC	CC	D	D	D
	90	D	D	D	D	D	D	D	D	D	D	D	D	D	D	D	D	D	D	D	D
	100	D	D	D	D	E	D	D	D	E	E	D	D	E	E	E	E	E	E	E	E

REVIEWED FOR CODE COMPLIANCE
OPM-0043-13
By: Jeffrey Kikumoto
DATE: 06/23/2016
CALIFORNIA BUILDING CODE, 2013

NOTES:

1. REFER TO PAGE T3.0 FOR TRAPEZE MEMBER SIZE DESIGNATIONS & ALLOWABLE MOMENT CAPACITIES .
2. STEEL ANGLE MAY BE USED IN PLACE OF CHANNEL STRUT. FOR 1⅝"x1⅝"x12 GA SINGLE STRUT, USE L2½x2½x¼. FOR 1⅝"x3¼"x12 GA SINGLE STRUT, USE L3x3x¼. FOR 1⅝"x1⅝"x12 GA SINGLE STRUT CONTRACTOR MAY USE 1⅝x$13/16$x12GA DOUBLE STRUT AS A SUBSTITUTION.
3. TRAPEZE MEMBERS MAY BE PROVIDED WITH ROUND HOLES. REFER TO X7.0 AND X7.1 FOR STRUT MEMBER DATA.
4. MAXIMUM SPAN OF TRAPEZE MEMBER IS MEASURED BETWEEN CENTER OF HANGER RODS.
5. CONTRACTOR MAY USE ANY TRAPEZE MEMBER SIZE LARGER THAN IS TABULATED. FOR EXAMPLE, IF TRAPEZE MEMBER SIZE "A" IS THE MINIMUM REQUIREMENT, THEN TRAPEZE MEMBER B, BB, C, CC, D, DD, E, OR EE CAN ALSO BE USED.
6. WHEN INCREASING DISTANCE FROM EDGE OF CABLE TRAY TO CENTER OF HANGER ROD MORE THAN 6", INCREASE THE WEIGHT PER FOOT BY A FACTOR OF INCREASED EDGE DISTANCE DIVIDED BY 6". FOR EXAMPLE, A 12" CABLE TRAY WEIGHING 9 LB/FT WITH AN EDGE DISTANCE OF 12" MUST INCREASE THE WEIGHT BY A FACTOR OF 2 (12"/6") TO USE THE ABOVE TABLE.

MASON WEST, INC.
1601 E. Miraloma Ave. Placentia, CA 92870
TEL (714) 630 - 0701, www.masonwest.com

Jiefu "Jeff" Zhang, SE
California SE No. S5270

PAGE
T3.1

CABLE TRAY	TRAPEZE SELECTION TABLES	LATERAL FORCE Fp = 0.375g (ASD) VERTICAL FORCE Fpv = 0.375g (ASD)

Fp = 0.375g Fpv = 0.375g		TRAPEZE SIZE DESIGNATION @ ALL-DIRECTIONAL AND LONGITUDINAL SEISMIC BRACE LOCATIONS																			
CABLE TRAY SUPPORT AT 10'-0" MAX.		LONG. & ALL-DIR. SEISMIC LOCATION SPACING 10 FT					LONG. & ALL-DIR. SEISMIC LOCATION SPACING 20 FT					LONG. & ALL-DIR. SEISMIC LOCATION SPACING 30 FT					LONG. & ALL-DIR. SEISMIC LOCATION SPACING 40 FT				
		MAX TRAPEZE SPAN					MAX TRAPEZE SPAN					MAX TRAPEZE SPAN					MAX TRAPEZE SPAN				
		18 IN	24 IN	36 IN	48 IN	60 IN	18 IN	24 IN	36 IN	48 IN	60 IN	18 IN	24 IN	36 IN	48 IN	60 IN	18 IN	24 IN	36 IN	48 IN	60 IN
CABLE TRAY WEIGHT (LBS/FT)	10	A	A	A	A	A	A	A	A	A	A	A	A	A	A	A	A	A	A	A	A
	20	A	A	A	A	A	A	A	A	A	A	A	A	A	A	A	A	A	A	A	A
	30	A	A	A	A	A	A	A	A	A	A	AA	AA	AA	AA	AA	AA	AA	AA	AA	AA
	40	B	B	B	B	B	B	B	B	B	B	B	B	B	B	B	B	B	B	B	B
	50	B	B	B	B	B	B	B	B	B	B	B	B	B	B	B	B	B	B	B	B
	60	B	B	B	B	B	B	B	B	B	B	B	B	B	B	B	B	B	B	B	C
	70	B	B	B	B	B	B	B	B	B	B	B	B	B	C	C	C	C	BB	BB	BB
	80	B	B	B	B	B	B	B	B	C	C	BB	BB	BB	BB	CC	BB	BB	BB	CC	CC
	90	B	B	B	C	C	BB	BB	BB	CC	CC	BB	BB	CC	CC	D	D	D	D	D	D
	100	D	D	D	D	D	D	D	D	D	D	D	D	D	D	E	D	D	D	E	E

Fp = 0.375g Fpv = 0.375g		TRAPEZE SIZE DESIGNATION @ ALL-DIRECTIONAL AND LONGITUDINAL SEISMIC BRACE LOCATIONS																			
CABLE TRAY SUPPORT AT 10'-0" MAX.		LONG. & ALL-DIR. SEISMIC LOCATION SPACING 50 FT					LONG. & ALL-DIR. SEISMIC LOCATION SPACING 60 FT					LONG. & ALL-DIR. SEISMIC LOCATION SPACING 70 FT					LONG. & ALL-DIR. SEISMIC LOCATION SPACING 80 FT				
		MAX TRAPEZE SPAN					MAX TRAPEZE SPAN					MAX TRAPEZE SPAN					MAX TRAPEZE SPAN				
		18 IN	24 IN	36 IN	48 IN	60 IN	18 IN	24 IN	36 IN	48 IN	60 IN	18 IN	24 IN	36 IN	48 IN	60 IN	18 IN	24 IN	36 IN	48 IN	60 IN
CABLE TRAY WEIGHT (LBS/FT)	10	A	A	A	A	A	A	A	A	A	A	A	A	A	A	A	A	A	A	A	A
	20	A	A	A	A	A	A	A	A	A	A	A	A	A	A	AA	A	A	A	AA	AA
	30	AA	AA	AA	B	B	B	B	B	B	B	B	B	B	B	B	B	B	B	B	B
	40	B	B	B	B	B	B	B	B	B	B	B	B	B	B	B	B	B	B	B	B
	50	B	B	B	B	B	B	B	B	B	C	B	B	C	C	C	C	C	C	BB	BB
	60	B	B	C	C	C	BB	BB	BB	BB	BB	BB	BB	BB	BB	BB	BB	BB	BB	BB	CC
	70	BB	BB	BB	BB	CC	BB	BB	BB	CC	CC	BB	BB	CC	CC	CC	CC	CC	D	D	D
	80	BB	BB	CC	D	D	D	D	D	D	D	D	D	D	D	D	D	D	D	D	E
	90	D	D	D	D	D	D	D	D	D	E	D	D	D	D	E	D	D	E	E	E
	100	D	E	E	E	E	DD	DD	DD	DD	EE	DD	DD	DD	DD	EE	EE	EE	EE	EE	EE

REVIEWED FOR CODE COMPLIANCE
OPM-0043-13
Dpd
BY: Jeffrey Y. Kikumoto
DATE 06/23/2016
CALIFORNIA BUILDING CODE, 2013

NOTES:

1. REFER TO PAGE T3.0 FOR TRAPEZE MEMBER SIZE DESIGNATIONS & ALLOWABLE MOMENT CAPACITIES .
2. STEEL ANGLE MAY BE USED IN PLACE OF CHANNEL STRUT. FOR 1⅝"x1⅝"x12 GA SINGLE STRUT, USE L2½x2½x¼. FOR 1⅝"x3¼"x12 GA SINGLE STRUT, USE L3x3x¼. FOR 1⅝"x1⅝"x12 GA SINGLE STRUT CONTRACTOR MAY USE 1⅝x^{13}⁄$_{16}$x12GA DOUBLE STRUT AS A SUBSTITUTION.
3. TRAPEZE MEMBERS MAY BE PROVIDED WITH ROUND HOLES. REFER TO X7.0 AND X7.1 FOR STRUT MEMBER DATA.
4. MAXIMUM SPAN OF TRAPEZE MEMBER IS MEASURED BETWEEN CENTER OF HANGER RODS.
5. CONTRACTOR MAY USE ANY TRAPEZE MEMBER SIZE LARGER THAN IS TABULATED. FOR EXAMPLE, IF TRAPEZE MEMBER SIZE "A" IS THE MINIMUM REQUIREMENT, THEN TRAPEZE MEMBER B, BB, C, CC, D, DD, E, OR EE CAN ALSO BE USED.
6. WHEN INCREASING DISTANCE FROM EDGE OF CABLE TRAY TO CENTER OF HANGER ROD MORE THAN 6", INCREASE THE WEIGHT PER FOOT BY A FACTOR OF INCREASED EDGE DISTANCE DIVIDED BY 6". FOR EXAMPLE, A 12" CABLE TRAY WEIGHING 9 LB/FT WITH AN EDGE DISTANCE OF 12" MUST INCREASE THE WEIGHT BY A FACTOR OF 2 (12"/6") TO USE THE ABOVE TABLE.

MASON WEST, INC.
1601 E. Miraloma Ave. Placentia, CA 92870
TEL (714) 630 - 0701, www.masonwest.com

Jiefu "Jeff" Zhang, SE
California SE No. S5270

PAGE
T3.2

CABLE TRAY	TRAPEZE SELECTION TABLES	LATERAL FORCE Fp = 0.50g (ASD) VERTICAL FORCE Fpv = 0.375g (ASD)

Fp = 0.5g Fpv = 0.375g		TRAPEZE SIZE DESIGNATION @ ALL-DIRECTIONAL AND LONGITUDINAL SEISMIC BRACE LOCATIONS																			
CABLE TRAY SUPPORT AT 10'-0" MAX.		LONG. & ALL-DIR. SEISMIC LOCATION SPACING 10 FT					LONG. & ALL-DIR. SEISMIC LOCATION SPACING 20 FT					LONG. & ALL-DIR. SEISMIC LOCATION SPACING 30 FT					LONG. & ALL-DIR. SEISMIC LOCATION SPACING 40 FT				
		MAX TRAPEZE SPAN					MAX TRAPEZE SPAN					MAX TRAPEZE SPAN					MAX TRAPEZE SPAN				
		18 IN	24 IN	36 IN	48 IN	60 IN	18 IN	24 IN	36 IN	48 IN	60 IN	18 IN	24 IN	36 IN	48 IN	60 IN	18 IN	24 IN	36 IN	48 IN	60 IN
CABLE TRAY WEIGHT (LBS/FT)	10	A	A	A	A	A	A	A	A	A	A	A	A	A	A	A	A	A	A	A	A
	20	A	A	A	A	A	A	A	A	A	A	A	A	A	A	A	A	A	A	A	A
	30	A	A	A	A	A	A	A	A	AA	AA	AA	AA	AA	AA	AA	AA	AA	AA	B	B
	40	B	B	B	B	B	B	B	B	B	B	B	B	B	B	B	B	B	B	B	B
	50	B	B	B	B	B	B	B	B	B	B	B	B	B	B	B	B	B	B	B	B
	60	B	B	B	B	B	B	B	B	B	B	B	B	B	B	C	C	C	C	CC	CC
	70	B	B	B	B	B	B	B	B	B	C	C	C	BB	BB	BB	BB	BB	BB	BB	CC
	80	B	B	B	B	B	C	C	BB	BB	BB	BB	BB	BB	CC	CC	CC	CC	D	D	D
	90	B	B	B	C	C	BB	BB	BB	CC	CC	D	D	D	D	D	D	D	D	D	D
	100	D	D	D	D	D	D	D	D	D	E	D	D	D	E	E	E	E	E	E	E

Fp = 0.5g Fpv = 0.375g		TRAPEZE SIZE DESIGNATION @ ALL-DIRECTIONAL AND LONGITUDINAL SEISMIC BRACE LOCATIONS																			
CABLE TRAY SUPPORT AT 10'-0" MAX.		LONG. & ALL-DIR. SEISMIC LOCATION SPACING 50 FT					LONG. & ALL-DIR. SEISMIC LOCATION SPACING 60 FT					LONG. & ALL-DIR. SEISMIC LOCATION SPACING 70 FT					LONG. & ALL-DIR. SEISMIC LOCATION SPACING 80 FT				
		MAX TRAPEZE SPAN					MAX TRAPEZE SPAN					MAX TRAPEZE SPAN					MAX TRAPEZE SPAN				
		18 IN	24 IN	36 IN	48 IN	60 IN	18 IN	24 IN	36 IN	48 IN	60 IN	18 IN	24 IN	36 IN	48 IN	60 IN	18 IN	24 IN	36 IN	48 IN	60 IN
CABLE TRAY WEIGHT (LBS/FT)	10	A	A	A	A	A	A	A	A	A	A	A	A	A	A	A	A	A	A	A	A
	20	A	A	A	A	A	A	A	A	AA	AA	A	A	AA	AA	AA	AA	AA	AA	AA	AA
	30	B	B	B	B	B	B	B	B	B	B	B	B	B	B	B	B	B	B	B	B
	40	B	B	B	B	B	B	B	B	B	B	B	B	B	C	C	C	C	C	C	C
	50	B	B	C	C	C	C	C	C	BB	BB	BB	BB	BB	BB	BB	BB	BB	BB	BB	BB
	60	BB	BB	BB	BB	BB	BB	BB	BB	BB	CC	BB	BB	CC	CC	CC	CC	CC	CC	CC	D
	70	CC	CC	CC	CC	CC	CC	CC	D	D	D	D	D	D	D	E	D	D	D	E	E
	80	D	D	D	D	D	D	D	D	D	E	D	D	E	E	E	E	E	E	E	E
	90	D	D	D	D	E	D	D	E	E	E	E	E	E	E	E	DD	DD	DD	DD	DD
	100	DD	DD	DD	DD	EE	DD	DD	DD	EE	EE	EE	EE	EE	EE	EE	EE	EE	EE	EE	EE

REVIEWED FOR CODE COMPLIANCE
OPM-0043-13
By: Jeffrey Y. Kikumoto
DATE: 06/23/2016
CALIFORNIA BUILDING CODE, 2013

NOTES:

1. REFER TO PAGE T3.0 FOR TRAPEZE MEMBER SIZE DESIGNATIONS & ALLOWABLE MOMENT CAPACITIES .
2. STEEL ANGLE MAY BE USED IN PLACE OF CHANNEL STRUT. FOR 1⅝"x1⅝"x12 GA SINGLE STRUT, USE L2½x2½x¼. FOR 1⅝"x3¼"x12 GA SINGLE STRUT, USE L3x3x¼. FOR 1⅝"x1⅝"x12 GA SINGLE STRUT CONTRACTOR MAY USE 1⅝x^{13}⁄$_{16}$x12GA DOUBLE STRUT AS A SUBSTITUTION.
3. TRAPEZE MEMBERS MAY BE PROVIDED WITH ROUND HOLES. REFER TO X7.0 AND X7.1 FOR STRUT MEMBER DATA.
4. MAXIMUM SPAN OF TRAPEZE MEMBER IS MEASURED BETWEEN CENTER OF HANGER RODS.
5. CONTRACTOR MAY USE ANY TRAPEZE MEMBER SIZE LARGER THAN IS TABULATED. FOR EXAMPLE, IF TRAPEZE MEMBER SIZE "A" IS THE MINIMUM REQUIREMENT, THEN TRAPEZE MEMBER B, BB, C, CC, D, DD, E, OR EE CAN ALSO BE USED.
6. WHEN INCREASING DISTANCE FROM EDGE OF CABLE TRAY TO CENTER OF HANGER ROD MORE THAN 6", INCREASE THE WEIGHT PER FOOT BY A FACTOR OF INCREASED EDGE DISTANCE DIVIDED BY 6". FOR EXAMPLE, A 12" CABLE TRAY WEIGHING 9 LB/FT WITH AN EDGE DISTANCE OF 12" MUST INCREASE THE WEIGHT BY A FACTOR OF 2 (12"/6") TO USE THE ABOVE TABLE.

MASON WEST, INC.
1601 E. Miraloma Ave. Placentia, CA 92870
TEL (714) 630 - 0701, www.masonwest.com

Jiefu "Jeff" Zhang, SE
California SE No. S5270

PAGE
T3.3

CABLE TRAY	TRAPEZE SELECTION TABLES	LATERAL FORCE Fp = 0.625g (ASD) VERTICAL FORCE Fpv = 0.375g (ASD)

Fp = 0.625g Fpv = 0.375g		TRAPEZE SIZE DESIGNATION @ ALL-DIRECTIONAL AND LONGITUDINAL SEISMIC BRACE LOCATIONS																			
CABLE TRAY SUPPORT AT 10'-0" MAX.		LONG. & ALL-DIR. SEISMIC LOCATION SPACING 10 FT					LONG. & ALL-DIR. SEISMIC LOCATION SPACING 20 FT					LONG. & ALL-DIR. SEISMIC LOCATION SPACING 30 FT					LONG. & ALL-DIR. SEISMIC LOCATION SPACING 40 FT				
		MAX TRAPEZE SPAN					MAX TRAPEZE SPAN					MAX TRAPEZE SPAN					MAX TRAPEZE SPAN				
		18 IN	24 IN	36 IN	48 IN	60 IN	18 IN	24 IN	36 IN	48 IN	60 IN	18 IN	24 IN	36 IN	48 IN	60 IN	18 IN	24 IN	36 IN	48 IN	60 IN
CABLE TRAY WEIGHT (LBS/FT)	10	A	A	A	A	A	A	A	A	A	A	A	A	A	A	A	A	A	A	A	A
	20	A	A	A	A	A	A	A	A	A	A	A	A	A	A	A	A	A	A	A	A
	30	A	A	A	A	A	AA	AA	AA	AA	AA	AA	AA	AA	B	B	B	B	B	B	B
	40	B	B	B	B	B	B	B	B	B	B	B	B	B	B	B	B	B	B	B	B
	50	B	B	B	B	B	B	B	B	B	B	B	B	B	B	B	B	B	C	C	BB
	60	B	B	B	B	B	B	B	B	B	B	B	B	C	C	C	BB	BB	BB	BB	BB
	70	B	B	B	B	B	B	B	C	C	C	BB	BB	BB	BB	CC	BB	BB	CC	CC	CC
	80	B	B	B	B	C	BB	BB	BB	BB	CC	BB	BB	CC	D	D	D	D	D	D	D
	90	B	B	BB	BB	CC	BB	BB	D	D	D	D	D	D	D	D	D	D	D	D	E
	100	D	D	D	D	D	D	D	D	D	E	D	E	E	E	E	DD	DD	DD	DD	EE

Fp = 0.625g Fpv = 0.375g		TRAPEZE SIZE DESIGNATION @ ALL-DIRECTIONAL AND LONGITUDINAL SEISMIC BRACE LOCATIONS																			
CABLE TRAY SUPPORT AT 10'-0" MAX.		LONG. & ALL-DIR. SEISMIC LOCATION SPACING 50 FT					LONG. & ALL-DIR. SEISMIC LOCATION SPACING 60 FT					LONG. & ALL-DIR. SEISMIC LOCATION SPACING 70 FT					LONG. & ALL-DIR. SEISMIC LOCATION SPACING 80 FT				
		MAX TRAPEZE SPAN					MAX TRAPEZE SPAN					MAX TRAPEZE SPAN					MAX TRAPEZE SPAN				
		18 IN	24 IN	36 IN	48 IN	60 IN	18 IN	24 IN	36 IN	48 IN	60 IN	18 IN	24 IN	36 IN	48 IN	60 IN	18 IN	24 IN	36 IN	48 IN	60 IN
CABLE TRAY WEIGHT (LBS/FT)	10	A	A	A	A	A	A	A	A	A	A	A	A	A	A	A	A	A	A	A	A
	20	A	A	A	AA	AA	AA	AA	AA	AA	AA	AA	AA	AA	AA	AA	AA	AA	AA	AA	AA
	30	B	B	B	B	B	B	B	B	B	B	B	B	B	B	B	B	B	B	B	C
	40	B	B	B	B	C	C	C	C	C	C	C	C	C	BB	BB	BB	BB	BB	BB	BB
	50	BB	BB	BB	BB	BB	BB	BB	BB	BB	BB	BB	BB	BB	BB	CC	BB	BB	CC	CC	CC
	60	BB	BB	BB	CC	CC	BB	BB	CC	CC	CC	CC	CC	D	D	E	E	E	E	E	E
	70	D	D	D	D	D	D	D	D	D	E	E	E	E	E	E	E	E	E	DD	DD
	80	D	D	D	D	E	E	E	E	E	E	DD	DD	DD	DD	DD	DD	DD	DD	DD	DD
	90	D	D	E	E	E	DD	DD	DD	DD	DD	DD	DD	DD	DD	DD	DD	DD	DD	DD	EE
	100	DD	DD	DD	EE	EE	DD	EE	EE	EE	EE	N/A	N/A	N/A	N/A	N/A	N/A	N/A	N/A	N/A	N/A

REVIEWED FOR CODE COMPLIANCE
OSHPD
OPM-0043-13
Reviewed By: Jeffrey K. Kikumoto
DATE 06/23/2016
CALIFORNIA BUILDING CODE, 2013

NOTES:

1. REFER TO PAGE T3.0 FOR TRAPEZE MEMBER SIZE DESIGNATIONS & ALLOWABLE MOMENT CAPACITIES .
2. STEEL ANGLE MAY BE USED IN PLACE OF CHANNEL STRUT. FOR 1⅝"x1⅝"x12 GA SINGLE STRUT, USE L2½x2½x¼. FOR 1⅝"x3¼"x12 GA SINGLE STRUT, USE L3x3x¼. FOR 1⅝"x1⅝"x12 GA SINGLE STRUT CONTRACTOR MAY USE 1⅝x$1\frac{3}{16}$x12GA DOUBLE STRUT AS A SUBSTITUTION.
3. TRAPEZE MEMBERS MAY BE PROVIDED WITH ROUND HOLES. REFER TO X7.0 AND X7.1 FOR STRUT MEMBER DATA.
4. MAXIMUM SPAN OF TRAPEZE MEMBER IS MEASURED BETWEEN CENTER OF HANGER RODS.
5. CONTRACTOR MAY USE ANY TRAPEZE MEMBER SIZE LARGER THAN IS TABULATED. FOR EXAMPLE, IF TRAPEZE MEMBER SIZE "A" IS THE MINIMUM REQUIREMENT, THEN TRAPEZE MEMBER B, BB, C, CC, D, DD, E, OR EE CAN ALSO BE USED.
6. WHEN INCREASING DISTANCE FROM EDGE OF CABLE TRAY TO CENTER OF HANGER ROD MORE THAN 6", INCREASE THE WEIGHT PER FOOT BY A FACTOR OF INCREASED EDGE DISTANCE DIVIDED BY 6". FOR EXAMPLE, A 12" CABLE TRAY WEIGHING 9 LB/FT WITH AN EDGE DISTANCE OF 12" MUST INCREASE THE WEIGHT BY A FACTOR OF 2 (12"/6") TO USE THE ABOVE TABLE.

MASON WEST, INC.
1601 E. Miraloma Ave. Placentia, CA 92870
TEL (714) 630 - 0701, www.masonwest.com

Jiefu "Jeff" Zhang, SE
California SE No. S5270

PAGE
T3.4

CABLE TRAY	TRAPEZE SELECTION TABLES	LATERAL FORCE Fp = 0.75g (ASD) VERTICAL FORCE Fpv = 0.375g (ASD)

Fp = 0.75g Fpv = 0.375g		TRAPEZE SIZE DESIGNATION @ ALL-DIRECTIONAL AND LONGITUDINAL SEISMIC BRACE LOCATIONS																			
CABLE TRAY SUPPORT AT 10'-0" MAX.		LONG. & ALL-DIR. SEISMIC LOCATION SPACING 10 FT					LONG. & ALL-DIR. SEISMIC LOCATION SPACING 20 FT					LONG. & ALL-DIR. SEISMIC LOCATION SPACING 30 FT					LONG. & ALL-DIR. SEISMIC LOCATION SPACING 40 FT				
		MAX TRAPEZE SPAN					MAX TRAPEZE SPAN					MAX TRAPEZE SPAN					MAX TRAPEZE SPAN				
		18 IN	24 IN	36 IN	48 IN	60 IN	18 IN	24 IN	36 IN	48 IN	60 IN	18 IN	24 IN	36 IN	48 IN	60 IN	18 IN	24 IN	36 IN	48 IN	60 IN
CABLE TRAY WEIGHT (LBS/FT)	10	A	A	A	A	A	A	A	A	A	A	A	A	A	A	A	A	A	A	A	A
	20	A	A	A	A	A	A	A	A	A	A	A	A	A	A	A	A	A	A	AA	AA
	30	A	A	A	A	A	AA	AA	AA	AA	AA	B	B	B	B	B	B	B	B	B	B
	40	B	B	B	B	B	B	B	B	B	B	B	B	B	B	B	B	B	B	B	B
	50	B	B	B	B	B	B	B	B	B	B	B	B	B	B	C	C	C	C	BB	BB
	60	B	B	B	B	B	B	B	B	B	C	BB	BB	BB	BB	BB	BB	BB	BB	BB	CC
	70	B	B	B	B	B	C	C	BB	BB	BB	BB	BB	BB	CC	CC	CC	CC	D	D	D
	80	B	B	B	C	C	BB	BB	BB	CC	CC	D	D	D	D	D	D	D	D	D	E
	90	BB	BB	BB	CC	CC	D	D	D	D	D	D	D	D	D	E	D	D	E	E	E
	100	D	D	D	D	D	D	D	D	E	E	DD	DD	DD	DD	EE	EE	EE	EE	EE	EE

Fp = 0.75g Fpv = 0.375g		TRAPEZE SIZE DESIGNATION @ ALL-DIRECTIONAL AND LONGITUDINAL SEISMIC BRACE LOCATIONS																			
CABLE TRAY SUPPORT AT 10'-0" MAX.		LONG. & ALL-DIR. SEISMIC LOCATION SPACING 50 FT					LONG. & ALL-DIR. SEISMIC LOCATION SPACING 60 FT					LONG. & ALL-DIR. SEISMIC LOCATION SPACING 70 FT					LONG. & ALL-DIR. SEISMIC LOCATION SPACING 80 FT				
		MAX TRAPEZE SPAN					MAX TRAPEZE SPAN					MAX TRAPEZE SPAN					MAX TRAPEZE SPAN				
		18 IN	24 IN	36 IN	48 IN	60 IN	18 IN	24 IN	36 IN	48 IN	60 IN	18 IN	24 IN	36 IN	48 IN	60 IN	18 IN	24 IN	36 IN	48 IN	60 IN
CABLE TRAY WEIGHT (LBS/FT)	10	A	A	A	A	A	A	A	A	A	A	A	A	A	A	A	A	A	A	A	A
	20	AA	AA	AA	AA	AA	AA	AA	AA	AA	AA	AA	AA	AA	AA	B	AA	AA	AA	B	B
	30	B	B	B	B	B	B	B	B	B	B	B	B	B	C	C	C	C	C	C	C
	40	C	C	C	C	C	C	C	C	BB	BB	BB	BB	BB	BB	BB	BB	BB	BB	BB	BB
	50	BB	BB	BB	BB	BB	BB	BB	BB	BB	CC	BB	BB	CC	CC	CC	CC	CC	CC	E	E
	60	BB	BB	CC	CC	CC	D	D	D	D	E	E	E	E	E	E	E	E	E	E	E
	70	D	D	D	D	E	E	E	E	E	E	DD	DD	DD	DD	DD	DD	DD	DD	DD	DD
	80	E	E	E	E	E	DD	DD	DD	DD	DD	DD	DD	DD	DD	DD	DD	DD	DD	DD	EE
	90	DD	DD	DD	DD	DD	DD	DD	DD	DD	EE	DD	DD	DD	DD	EE	DD	DD	EE	EE	EE
	100	DD	EE	EE	EE	EE	N/A	N/A	N/A	N/A	N/A	N/A	N/A	N/A	N/A	N/A	N/A	N/A	N/A	N/A	N/A

REVIEWED FOR CODE COMPLIANCE
OPM-0043-13
BY: Jeffrey T. Kikumoto
DATE: 06/23/2016
CALIFORNIA BUILDING CODE, 2013

NOTES:

1. REFER TO PAGE T3.0 FOR TRAPEZE MEMBER SIZE DESIGNATIONS & ALLOWABLE MOMENT CAPACITIES .
2. STEEL ANGLE MAY BE USED IN PLACE OF CHANNEL STRUT. FOR 1⅝"x1⅝"x12 GA SINGLE STRUT, USE L2½x2½x¼. FOR 1⅝"x3¼"x12 GA SINGLE STRUT, USE L3x3x¼. FOR 1⅝"x1⅝"x12 GA SINGLE STRUT CONTRACTOR MAY USE 1⅝x^{13}⁄$_{16}$x12GA DOUBLE STRUT AS A SUBSTITUTION.
3. TRAPEZE MEMBERS MAY BE PROVIDED WITH ROUND HOLES. REFER TO X7.0 AND X7.1 FOR STRUT MEMBER DATA.
4. MAXIMUM SPAN OF TRAPEZE MEMBER IS MEASURED BETWEEN CENTER OF HANGER RODS.
5. CONTRACTOR MAY USE ANY TRAPEZE MEMBER SIZE LARGER THAN IS TABULATED. FOR EXAMPLE, IF TRAPEZE MEMBER SIZE "A" IS THE MINIMUM REQUIREMENT, THEN TRAPEZE MEMBER B, BB, C, CC, D, DD, E, OR EE CAN ALSO BE USED.
6. WHEN INCREASING DISTANCE FROM EDGE OF CABLE TRAY TO CENTER OF HANGER ROD MORE THAN 6", INCREASE THE WEIGHT PER FOOT BY A FACTOR OF INCREASED EDGE DISTANCE DIVIDED BY 6". FOR EXAMPLE, A 12" CABLE TRAY WEIGHING 9 LB/FT WITH AN EDGE DISTANCE OF 12" MUST INCREASE THE WEIGHT BY A FACTOR OF 2 (12"/6") TO USE THE ABOVE TABLE.

MASON WEST, INC.
1601 E. Miraloma Ave. Placentia, CA 92870
TEL (714) 630 - 0701, www.masonwest.com

Jiefu "Jeff" Zhang, SE
California SE No. S5270

PAGE
T3.5

CABLE TRAY	TRAPEZE SELECTION TABLES	LATERAL FORCE Fp = 0.875g (ASD) VERTICAL FORCE Fpv = 0.375g (ASD)

Fp = 0.875g Fpv = 0.375g		TRAPEZE SIZE DESIGNATION @ ALL-DIRECTIONAL AND LONGITUDINAL SEISMIC BRACE LOCATIONS																			
CABLE TRAY SUPPORT AT 10'-0" MAX.		LONG. & ALL-DIR. SEISMIC LOCATION SPACING 10 FT					LONG. & ALL-DIR. SEISMIC LOCATION SPACING 20 FT					LONG. & ALL-DIR. SEISMIC LOCATION SPACING 30 FT					LONG. & ALL-DIR. SEISMIC LOCATION SPACING 40 FT				
		MAX TRAPEZE SPAN					MAX TRAPEZE SPAN					MAX TRAPEZE SPAN					MAX TRAPEZE SPAN				
		18 IN	24 IN	36 IN	48 IN	60 IN	18 IN	24 IN	36 IN	48 IN	60 IN	18 IN	24 IN	36 IN	48 IN	60 IN	18 IN	24 IN	36 IN	48 IN	60 IN
CABLE TRAY WEIGHT (LBS/FT)	10	A	A	A	A	A	A	A	A	A	A	A	A	A	A	A	A	A	A	A	A
	20	A	A	A	A	A	A	A	A	A	A	A	A	A	A	AA	A	A	AA	AA	AA
	30	A	A	A	A	AA	AA	AA	AA	AA	B	B	B	B	B	B	B	B	B	B	B
	40	B	B	B	B	B	B	B	B	B	B	B	B	B	B	B	B	B	B	C	C
	50	B	B	B	B	B	B	B	B	B	B	B	B	C	C	C	BB	BB	BB	BB	BB
	60	B	B	B	B	B	B	B	B	C	C	BB	BB	BB	BB	BB	BB	BB	BB	CC	CC
	70	B	B	B	B	C	BB	BB	BB	BB	CC	BB	BB	CC	CC	CC	D	D	D	D	E
	80	B	B	C	C	C	BB	BB	CC	CC	CC	D	D	D	D	D	D	D	E	E	E
	90	BB	BB	BB	CC	CC	D	D	D	D	D	D	D	D	D	E	E	E	E	E	E
	100	D	D	D	D	D	D	D	E	E	E	DD	DD	DD	DD	EE	EE	EE	EE	EE	EE

Fp = 0.875g Fpv = 0.375g		TRAPEZE SIZE DESIGNATION @ ALL-DIRECTIONAL AND LONGITUDINAL SEISMIC BRACE LOCATIONS																			
CABLE TRAY SUPPORT AT 10'-0" MAX.		LONG. & ALL-DIR. SEISMIC LOCATION SPACING 50 FT					LONG. & ALL-DIR. SEISMIC LOCATION SPACING 60 FT					LONG. & ALL-DIR. SEISMIC LOCATION SPACING 70 FT					LONG. & ALL-DIR. SEISMIC LOCATION SPACING 80 FT				
		MAX TRAPEZE SPAN					MAX TRAPEZE SPAN					MAX TRAPEZE SPAN					MAX TRAPEZE SPAN				
		18 IN	24 IN	36 IN	48 IN	60 IN	18 IN	24 IN	36 IN	48 IN	60 IN	18 IN	24 IN	36 IN	48 IN	60 IN	18 IN	24 IN	36 IN	48 IN	60 IN
CABLE TRAY WEIGHT (LBS/FT)	10	A	A	A	A	A	A	A	A	A	A	A	A	A	A	A	A	A	A	A	A
	20	AA	AA	AA	AA	AA	AA	AA	AA	AA	B	AA	AA	AA	B	B	AA	AA	B	B	B
	30	B	B	B	B	B	B	B	B	C	C	C	C	C	C	C	C	C	BB	BB	BB
	40	C	C	C	BB	BB	BB	BB	BB	BB	BB	BB	BB	BB	BB	BB	BB	BB	BB	CC	CC
	50	BB	BB	BB	BB	CC	BB	BB	CC	CC	CC	CC	CC	CC	E	E	E	E	E	E	E
	60	CC	CC	D	D	E	E	E	E	E	E	DD	DD	DD	DD	DD	DD	DD	DD	DD	DD
	70	E	E	E	E	E	DD	DD	DD	DD	DD	DD	DD	DD	DD	DD	DD	DD	DD	DD	EE
	80	DD	DD	DD	DD	DD	DD	DD	DD	DD	DD	DD	DD	DD	DD	EE	DD	DD	EE	EE	EE
	90	DD	DD	DD	DD	DD	DD	DD	DD	DD	EE	DD	DD	EE	EE	EE	EE	EE	EE	EE	EE
	100	N/A	N/A	N/A	N/A	N/A	N/A	N/A	N/A	N/A	N/A	N/A	N/A	N/A	N/A	N/A	N/A	N/A	N/A	N/A	N/A

NOTES:

1. REFER TO PAGE T3.0 FOR TRAPEZE MEMBER SIZE DESIGNATIONS & ALLOWABLE MOMENT CAPACITIES .
2. STEEL ANGLE MAY BE USED IN PLACE OF CHANNEL STRUT. FOR 1⅝"x1⅝"x12 GA SINGLE STRUT, USE L2½x2½x¼. FOR 1⅝"x3¼"x12 GA SINGLE STRUT, USE L3x3x¼. FOR 1⅝"x1⅝"x12 GA SINGLE STRUT CONTRACTOR MAY USE 1⅝x1 3/16x12GA DOUBLE STRUT AS A SUBSTITUTION.
3. TRAPEZE MEMBERS MAY BE PROVIDED WITH ROUND HOLES. REFER TO X7.0 AND X7.1 FOR STRUT MEMBER DATA.
4. MAXIMUM SPAN OF TRAPEZE MEMBER IS MEASURED BETWEEN CENTER OF HANGER RODS.
5. CONTRACTOR MAY USE ANY TRAPEZE MEMBER SIZE LARGER THAN IS TABULATED. FOR EXAMPLE, IF TRAPEZE MEMBER SIZE "A" IS THE MINIMUM REQUIREMENT, THEN TRAPEZE MEMBER B, BB, C, CC, D, DD, E, OR EE CAN ALSO BE USED.
6. WHEN INCREASING DISTANCE FROM EDGE OF CABLE TRAY TO CENTER OF HANGER ROD MORE THAN 6", INCREASE THE WEIGHT PER FOOT BY A FACTOR OF INCREASED EDGE DISTANCE DIVIDED BY 6". FOR EXAMPLE, A 12" CABLE TRAY WEIGHING 9 LB/FT WITH AN EDGE DISTANCE OF 12" MUST INCREASE THE WEIGHT BY A FACTOR OF 2 (12"/6") TO USE THE ABOVE TABLE.

MASON WEST, INC.
1601 E. Miraloma Ave. Placentia, CA 92870
TEL (714) 630 - 0701, www.masonwest.com

Jiefu "Jeff" Zhang, SE
California SE No. S5270

PAGE
T3.6

CBC 2013 APPROVED FOR CODE COMPLIANCE
OSHPD
OPM-0043-13
Reviewed for Code Compliance
DATE 06/23/2016
By Jeffrey Kikumoto
CALIFORNIA BUILDING CODE, 2013

CABLE TRAY	TRAPEZE SELECTION TABLES	LATERAL FORCE Fp = 1.00g (ASD) VERTICAL FORCE Fpv = 0.375g (ASD)

Fp = 1g Fpv = 0.375g		TRAPEZE SIZE DESIGNATION @ ALL-DIRECTIONAL AND LONGITUDINAL SEISMIC BRACE LOCATIONS																			
CABLE TRAY SUPPORT AT 10'-0" MAX.		LONG. & ALL-DIR. SEISMIC LOCATION SPACING 10 FT					LONG. & ALL-DIR. SEISMIC LOCATION SPACING 20 FT					LONG. & ALL-DIR. SEISMIC LOCATION SPACING 30 FT					LONG. & ALL-DIR. SEISMIC LOCATION SPACING 40 FT				
		MAX TRAPEZE SPAN					MAX TRAPEZE SPAN					MAX TRAPEZE SPAN					MAX TRAPEZE SPAN				
		18 IN	24 IN	36 IN	48 IN	60 IN	18 IN	24 IN	36 IN	48 IN	60 IN	18 IN	24 IN	36 IN	48 IN	60 IN	18 IN	24 IN	36 IN	48 IN	60 IN
CABLE TRAY WEIGHT (LBS/FT)	10	A	A	A	A	A	A	A	A	A	A	A	A	A	A	A	A	A	A	A	A
	20	A	A	A	A	A	A	A	A	A	A	A	A	A	AA	AA	AA	AA	AA	AA	AA
	30	A	A	A	AA	AA	AA	AA	AA	B	B	B	B	B	B	B	B	B	B	B	B
	40	B	B	B	B	B	B	B	B	B	B	B	B	B	B	B	C	C	C	C	C
	50	B	B	B	B	B	B	B	B	B	B	C	C	C	BB	BB	BB	BB	BB	BB	BB
	60	B	B	B	B	B	C	C	C	C	BB	BB	BB	BB	BB	CC	CC	CC	CC	CC	D
	70	B	B	B	B	C	BB	BB	BB	BB	CC	CC	CC	D	D	D	D	D	D	E	E
	80	C	C	BB	BB	BB	CC	CC	D	D	D	D	D	D	D	E	E	E	E	E	E
	90	BB	BB	BB	CC	CC	D	D	D	D	D	D	D	E	E	E	DD	DD	DD	DD	DD
	100	D	D	D	D	E	E	E	E	E	E	DD	DD	DD	EE	EE	EE	EE	EE	EE	EE

Fp = 1g Fpv = 0.375g		TRAPEZE SIZE DESIGNATION @ ALL-DIRECTIONAL AND LONGITUDINAL SEISMIC BRACE LOCATIONS																			
CABLE TRAY SUPPORT AT 10'-0" MAX.		LONG. & ALL-DIR. SEISMIC LOCATION SPACING 50 FT					LONG. & ALL-DIR. SEISMIC LOCATION SPACING 60 FT					LONG. & ALL-DIR. SEISMIC LOCATION SPACING 70 FT					LONG. & ALL-DIR. SEISMIC LOCATION SPACING 80 FT				
		MAX TRAPEZE SPAN					MAX TRAPEZE SPAN					MAX TRAPEZE SPAN					MAX TRAPEZE SPAN				
		18 IN	24 IN	36 IN	48 IN	60 IN	18 IN	24 IN	36 IN	48 IN	60 IN	18 IN	24 IN	36 IN	48 IN	60 IN	18 IN	24 IN	36 IN	48 IN	60 IN
CABLE TRAY WEIGHT (LBS/FT)	10	A	A	A	A	A	A	A	A	A	A	A	A	A	A	A	A	A	A	A	AA
	20	AA	AA	AA	AA	AA	AA	AA	AA	B	B	AA	AA	B	B	B	B	B	B	B	B
	30	B	B	B	B	C	C	C	C	C	C	C	C	BB	BB	BB	BB	BB	BB	BB	BB
	40	BB	BB	BB	BB	BB	BB	BB	BB	BB	BB	BB	BB	BB	CC	CC	CC	CC	CC	CC	CC
	50	BB	BB	CC	CC	CC	CC	CC	CC	E	E	E	E	EE	E	E	DD	DD	DD	DD	DD
	60	D	D	D	E	E	E	E	E	E	E	DD	DD	DD	DD	DD	DD	DD	DD	DD	DD
	70	E	E	E	E	DD	DD	DD	DD	DD	DD	DD	DD	DD	DD	EE	DD	DD	DD	EE	EE
	80	DD	DD	DD	DD	DD	DD	DD	DD	DD	EE	DD	DD	EE	EE	EE	EE	EE	EE	EE	EE
	90	DD	DD	DD	DD	EE	DD	DD	EE	EE	EE	EE	EE	EE	EE	EE	N/A	N/A	N/A	N/A	N/A
	100	N/A	N/A	N/A	N/A	N/A	N/A	N/A	N/A	N/A	N/A	N/A	N/A	N/A	N/A	N/A	N/A	N/A	N/A	N/A	N/A

CERTIFIED FOR CODE COMPLIANCE
OSHPD
OPM-0043-13
Reviewed By: Jeffrey Kikumoto
DATE: 06/23/2016
CALIFORNIA BUILDING CODE, 2013

NOTES:

1. REFER TO PAGE T3.0 FOR TRAPEZE MEMBER SIZE DESIGNATIONS & ALLOWABLE MOMENT CAPACITIES .
2. STEEL ANGLE MAY BE USED IN PLACE OF CHANNEL STRUT. FOR 1⅝"x1⅝"x12 GA SINGLE STRUT, USE L2½x2½x¼. FOR 1⅝"x3¼"x12 GA SINGLE STRUT, USE L3x3x¼. FOR 1⅝"x1⅝"x12 GA SINGLE STRUT CONTRACTOR MAY USE 1⅝x$^{13}/_{16}$x12GA DOUBLE STRUT AS A SUBSTITUTION.
3. TRAPEZE MEMBERS MAY BE PROVIDED WITH ROUND HOLES. REFER TO X7.0 AND X7.1 FOR STRUT MEMBER DATA.
4. MAXIMUM SPAN OF TRAPEZE MEMBER IS MEASURED BETWEEN CENTER OF HANGER RODS.
5. CONTRACTOR MAY USE ANY TRAPEZE MEMBER SIZE LARGER THAN IS TABULATED. FOR EXAMPLE, IF TRAPEZE MEMBER SIZE "A" IS THE MINIMUM REQUIREMENT, THEN TRAPEZE MEMBER B, BB, C, CC, D, DD, E, OR EE CAN ALSO BE USED.
6. WHEN INCREASING DISTANCE FROM EDGE OF CABLE TRAY TO CENTER OF HANGER ROD MORE THAN 6", INCREASE THE WEIGHT PER FOOT BY A FACTOR OF INCREASED EDGE DISTANCE DIVIDED BY 6". FOR EXAMPLE, A 12" CABLE TRAY WEIGHING 9 LB/FT WITH AN EDGE DISTANCE OF 12" MUST INCREASE THE WEIGHT BY A FACTOR OF 2 (12"/6") TO USE THE ABOVE TABLE.

MASON WEST, INC.
1601 E. Miraloma Ave. Placentia, CA 92870
TEL (714) 630 - 0701, www.masonwest.com

Jiefu "Jeff" Zhang, SE
California SE No. S5270

PAGE
T3.7

MASON IND. N.Y. SCB - SEISMIC CABLE BRACE

FM

TESTED

FINISH:
ALL PARTS ARE
ZINC ELECTROPLATED

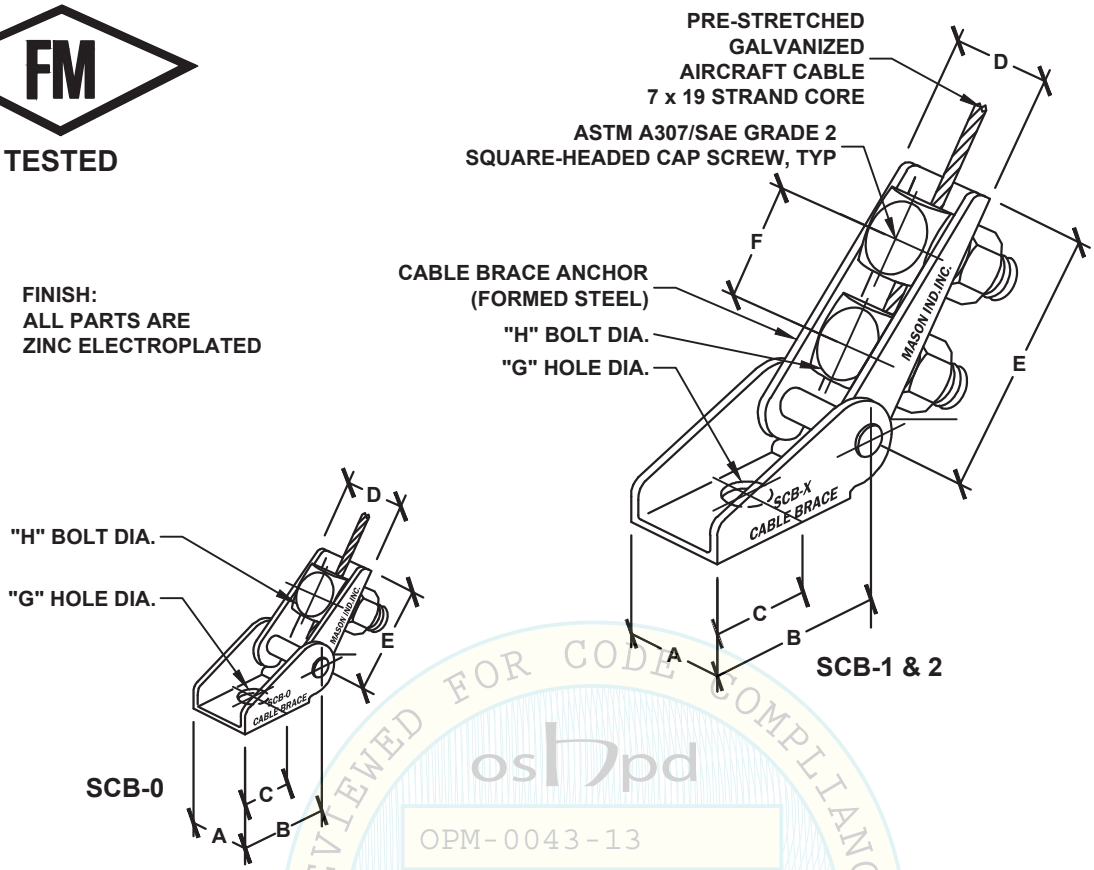

NOTE: NOT TO BE USED AS A HANGER FOR EQUIPMENT, DUCTWORK OR PIPING.
TO BE USED AS A SEISMIC RESTRAINT ONLY.

REVIEWED FOR CODE COMPLIANCE
CALIFORNIA BUILDING CODE 2013
oshpd
OPM-0043-13
BY: Jeffrey Y. Kikumoto
DATE: 06/23/2016

TYPE SCB DIMENSIONS (inches **mm**)

SIZE	A		B		C		D		E		F		G		H	
SCB-0	1 5/16	33	1 1/2	38	3/4	19	15/16	24	1 3/4	44	-	-	7/16	11	5/8	16
SCB-1	1 3/8	35	2	51	1	25	1	25	3 3/8	86	1 1/2	38	9/16	14	5/8	16
SCB-2	1 5/8	41	2 3/4	70	1 3/8	35	1 1/4	32	4 3/8	111	1 3/4	44	11/16	17	3/4	19

TYPE SCB ASSEMBLY RATINGS (ASD)

SIZE	CABLE DIA.[1]		LATERAL LOAD RATINGS [4]						TORQUE ON BOLTS[3]		
			30° - 45° [2]			46° - 60° [2]					
	(in)	(mm)	lbs	kN	kg	lbs	kN	kg	Ft-lbs	N-m	Kg-m
SCB-0	3/32	2.4	283	1.3	128	200	0.9	91	30	41	4.2
SCB-1	1/8	3	565	2.5	256	400	1.8	181	25	34	3.5
SCB-2	3/16	5	1188	5.3	539	840	3.7	381	45	61	6.2

1. CABLES SHALL MEET THE FOLLOWING SPECIFICATIONS: MIL-DTL-83420M WITH AMENDMENT 2 AND RR-W-410F.
2. BRACE ANGLE MEASURED FROM HORIZONTAL.
3. REFER TO PAGE X4.0 FOR BREAK-OFF NUT (MW-SCB-BON) OPTION TO STANDARD HEX NUT.
4. ATTACHMENT TO STEEL OR OTHER SUBSTRATES (e.g., CONCRETE, WOOD) MAY GOVERN THE DESIGN OF THE OVERALL BRACE ASSEMBLY AND SHALL BE EVALUATED ON A PROJECT BY PROJECT BASIS PER ATTACHMENT LOAD RATINGS IN SECTION N.

MASON WEST, INC.
1601 E. Miraloma Ave. Placentia, CA 92870
TEL (714) 630 - 0701, www.masonwest.com

Jiefu "Jeff" Zhang, SE
California SE No. S5270

PAGE
X1.0

MASON IND. N.Y. SCBH - SEISMIC CABLE BRACE WITH HOOK ATTACHMENT

FM

TESTED

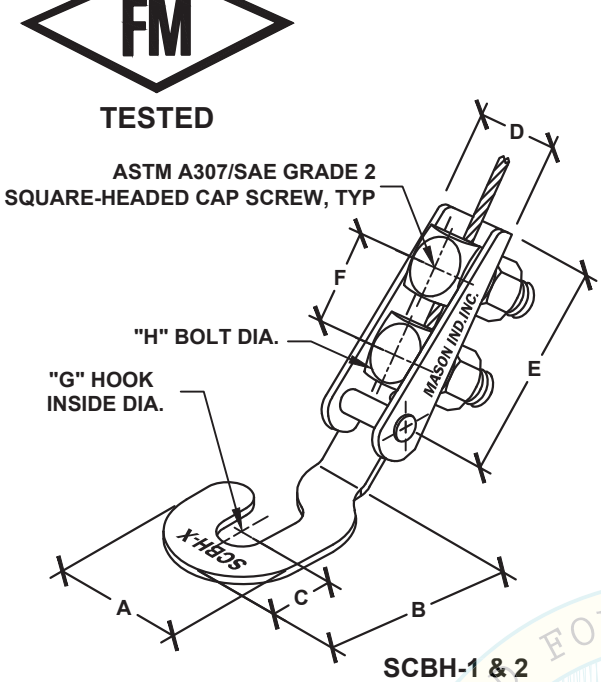

SCBH-1 & 2

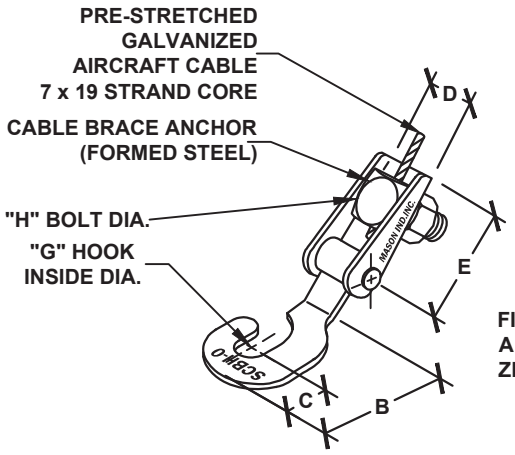

SCBH-0

FINISH:
ALL PARTS ARE
ZINC ELECTROPLATED

NOTE: NOT TO BE USED AS A HANGER FOR EQUIPMENT, DUCTWORK OR PIPING. TO BE USED AS A SEISMIC RESTRAINT ONLY.

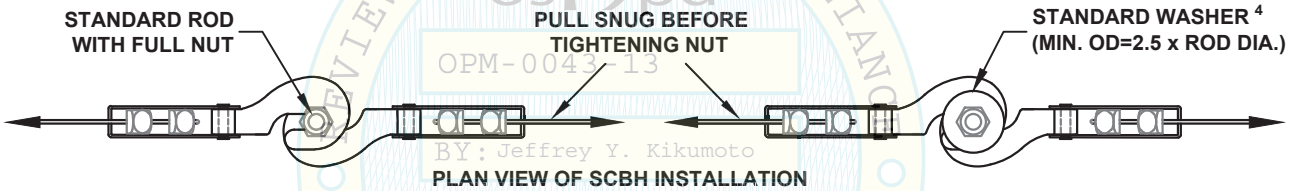

PLAN VIEW OF SCBH INSTALLATION

osDpd
OPM-0043-13
BY: Jeffrey Y. Kikumoto
DATE: 06/23/2016
REVIEWED FOR CODE COMPLIANCE
CALIFORNIA BUILDING CODE, 2013

TYPE SCBH DIMENSIONS (inches **mm**)

SIZE	FOR USE WITH ROD SIZES	A		B		C		D		E		F		G		H	
SCBH-0	3/8	10	1 3/8	35	2 1/16	52	11/16	17	15/16	24	1 3/4	44	-	-	3/8	10	5/8	16
SCBH-1	1/2 [4], 5/8	13, 16	1 7/8	48	2 3/8	60	1	25	1	25	3 3/8	86	1 1/2	38	5/8	16	5/8	16
SCBH-2	3/4 [4], 7/8	19, 22	2 7/8	73	3 3/4	95	1 1/4	35	1 1/4	32	4 3/8	111	1 3/4	44	7/8	22	3/4	19

TYPE SCBH ASSEMBLY RATINGS (ASD)

SIZE	CABLE DIA.[1]		LATERAL LOAD RATINGS [5]						TORQUE ON BOLTS[3]		
			30° - 45° [2]			46° - 60° [2]					
	(in)	(mm)	lbs	kN	kg	lbs	kN	kg	Ft-lbs	N-m	Kg-m
SCBH-0	3/32	2.4	283	1.3	128	200	0.9	91	30	41	4.2
SCBH-1	1/8	3	565	2.5	256	400	1.8	181	25	34	3.5
SCBH-2	3/16	5	1030	4.6	467	480	2.2	218	45	61	6.2

1. CABLES SHALL MEET THE FOLLOWING SPECIFICATIONS: MIL-DTL-83420M WITH AMENDMENT 2 AND RR-W-410F.
2. BRACE ANGLE MEASURED FROM HORIZONTAL.
3. REFER TO PAGE X4.0 FOR BREAK-OFF NUT (MW-SCB-BON) OPTION TO STANDARD HEX NUT.
4. STANDARD WASHER REQUIRED FOR ROD SIZES SMALLER THAN THE HOOK INSIDE DIAMETER 'G'.
5. ATTACHMENT TO STEEL OR OTHER SUBSTRATES (e.g., CONCRETE, WOOD) MAY GOVERN THE DESIGN OF THE OVERALL BRACE ASSEMBLY AND SHALL BE EVALUATED ON A PROJECT BY PROJECT BASIS PER ATTACHMENT LOAD RATINGS IN SECTION N.

MASON WEST, INC.
1601 E. Miraloma Ave. Placentia, CA 92870
TEL (714) 630 - 0701, www.masonwest.com

Jiefu "Jeff" Zhang, SE
California SE No. S5270

PAGE
X1.1

MASON IND. N.Y. SSBS - SEISMIC SOLID BRACE

APPROVED

½" (13mm) DIA. BOLTS (ASTM A307) MIN. (1) REQUIRED PER SSBS AS ILLUSTRATED. TORQUE BOLTS TO 50 FT-LBS (68 Nm) (REFER TO PAGE X2.3 FOR ATTACHMENT DETAILS) FOR STEEL ANGLE, 2 BOLTS WITH STANDARD NUTS ARE REQUIRED. HOLES IN ANGLE TO BE 9/16" DIAMETER.

STANDARD WASHER, TYP

STRUT SHOWN MAY BE STEEL ANGLE DRILLED TO SUIT. (ASTM A36, Fy = 36 KSI)

STRUT ATTACHMENT NUT WITH STAMPED TEETH AT OPEN FACE OF STRUT

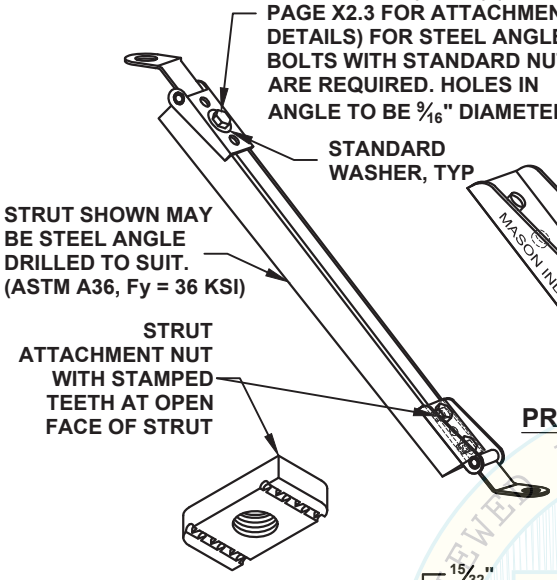

SOLID BRACE ANCHOR (FORMED STEEL)

FINISH: ALL PARTS ARE ZINC ELECTROPLATED

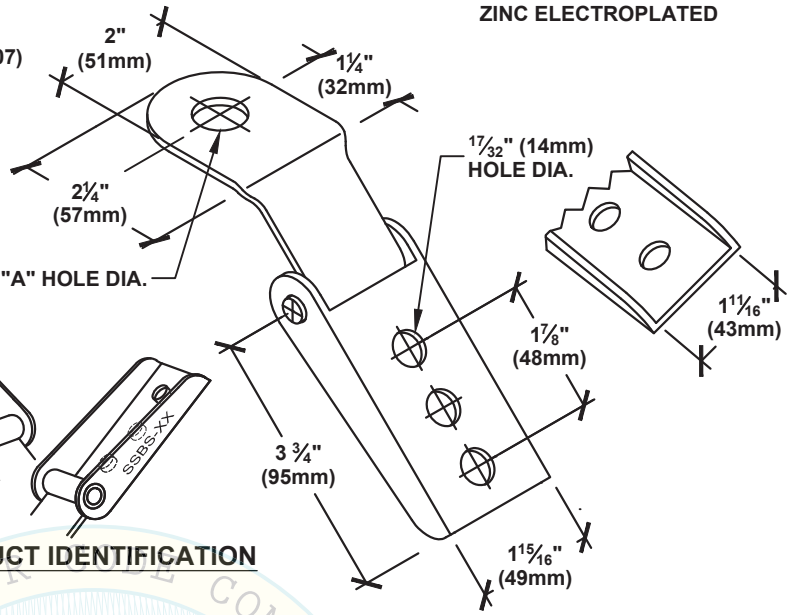

PRODUCT IDENTIFICATION

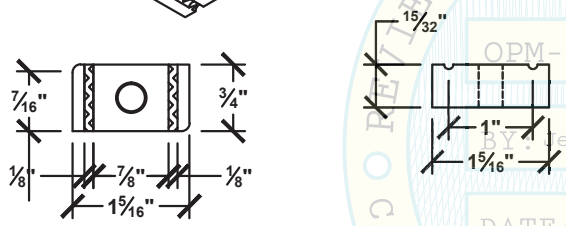

NOTE: NOT TO BE USED AS A HANGER FOR EQUIPMENT, DUCTWORK OR PIPING. TO BE USED AS A SEISMIC RESTRAINT ONLY.

STRUT NUT DIMENSIONS[2]

STRUT ATTACHMENT NUT (ASTM A36) MUST HAVE STAMPED TEETH TO ACHIEVE THESE VALUES.

BRACE MEMBER AXIAL RATING (ASD) (LBS)

AXIAL MEMBER	MAX LENGTH (FT)		
	5'-0"	9'-6"	14'-6"
1⅝x1⅝x12GA SINGLE STRUT	1600	850	475
1⅝x1⅝x12GA DOUBLE STRUT	3950	2200	1200
L2x2x¼	5790	1970	920
L3x3x¼	14400	6200	3000

NOTE: STRUT MUST BE ASTM A1011SS GR 33 COLD ROLLED MILD STEEL, SLOTTED, PUNCHED OR SOLID (REF X7.0 & X7.1). DOUBLE STRUT MUST BE MINIMUM 2'-0" LONG. ANGLE MUST BE A36 STEEL.

TYPE SSBS DIMENSIONS & RATINGS (ASD)

SIZE	A		ROD/BOLT SIZE		LATERAL LOAD RATINGS [3]					
					30° - 45° [1]			46° - 60° [1]		
	(in)	(mm)	(in)	(mm)	lbs	kN	kg	lbs	kN	kg
SSBS-12	17/32	13	⅜	10	660	2.90	299	970	4.30	440
SSBS-12	17/32	13	½	13	660	2.90	299	970	4.30	440
SSBS-20	25/32	20	⅝	16	660	2.90	299	970	4.30	440
SSBS-20	25/32	20	¾	19	660	2.90	299	970	4.30	440
SSBS-25	1 1/32	26	⅞	22	660	2.90	299	970	4.30	440
SSBS-25	1 1/32	26	1	25	660	2.90	299	970	4.30	440

1. BRACE ANGLE MEASURED FROM HORIZONTAL.
2. REFER TO PAGE X4.0 FOR STRUT NUT WITH STUD (MW-SSN) WITH BREAK-OFF NUT (MW-BON) OPTION TO STRUT NUT AND HEX BOLT.
3. ATTACHMENT TO STEEL OR OTHER SUBSTRATES (e.g., CONCRETE, WOOD) MAY GOVERN THE DESIGN OF THE OVERALL BRACE ASSEMBLY AND SHALL BE EVALUATED ON A PROJECT BY PROJECT BASIS PER ATTACHMENT LOAD RATINGS IN SECTION N.

MASON WEST, INC.
1601 E. Miraloma Ave. Placentia, CA 92870
TEL (714) 630 - 0701, www.masonwest.com

Jiefu "Jeff" Zhang, SE
California SE No. S5270

PAGE
X2.0

REVIEWED FOR CODE COMPLIANCE OSHPD OPM-0043-13 BY: Jeffrey Y. Kikumoto DATE: 06/23/2016 CALIFORNIA BUILDING CODE

MASON IND. N.Y. SHB - SEISMIC HOOK BRACE

FM

TESTED

FINISH:
ALL PARTS ARE
ZINC ELECTROPLATED

REFER TO D11.10 - D11.13
FOR CONNECTION TO
SUSPENDED EQUIPMENT

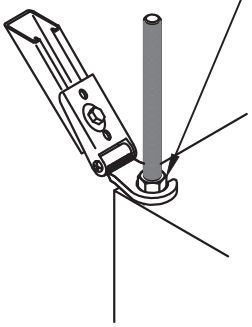

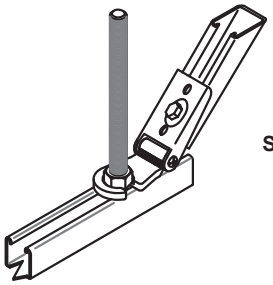

TRANSVERSE BRACING

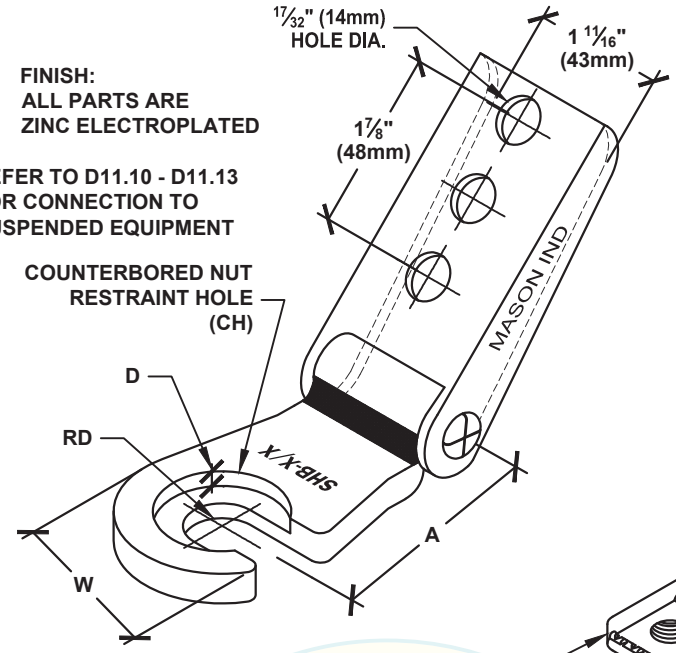

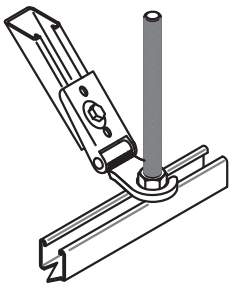

LONGITUDINAL BRACING

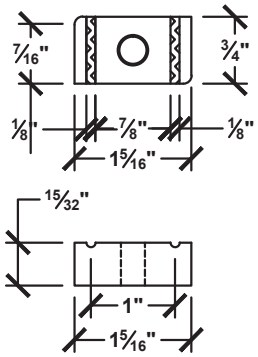

STRUT NUT DIMENSIONS[2]

STRUT ATTACHMENT NUT (ASTM A36)
MUST HAVE STAMPED TEETH TO
ACHIEVE THESE VALUES.

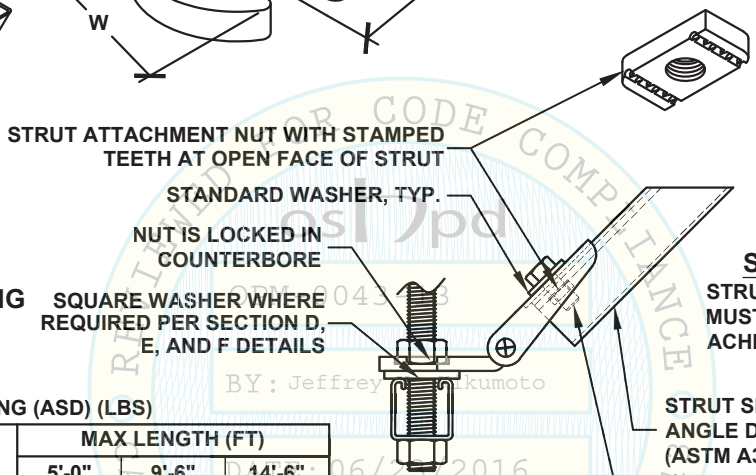

STRUT SHOWN MAY BE STEEL
ANGLE DRILLED TO SUIT.
(ASTM A36, Fy = 36 KSI)
1/2" (13mm) DIA. BOLTS (ASTM A307)
MIN. (1) REQUIRED PER SHB.
TORQUE BOLTS TO 50 FT-LBS (68 Nm)
(REFER TO PAGE X2.3 FOR ATTACHMENT
DETAILS) FOR STEEL ANGLE, 2 BOLTS
WITH STANDARD NUTS ARE REQUIRED.
HOLES IN ANGLE TO BE 9/16" DIAMETER.

NOTE: NOT TO BE USED AS A
HANGER FOR EQUIPMENT,
DUCTWORK OR PIPING.
TO BE USED AS A SEISMIC
RESTRAINT ONLY.

BRACE MEMBER AXIAL RATING (ASD) (LBS)

AXIAL MEMBER	MAX LENGTH (FT)		
	5'-0"	9'-6"	14'-6"
1 5/8x1 5/8x12GA SINGLE STRUT	1600	850	475
1 5/8x1 5/8x12GA DOUBLE STRUT	3950	2200	1200
L2x2x1/4	5790	1970	920
L3x3x1/4	14400	6200	3000

NOTE: STRUT MUST BE ASTM A1011SS GR 33 COLD ROLLED MILD STEEL, SLOTTED, PUNCHED OR SOLID (REF X7.0 & X7.1). DOUBLE STRUT MUST BE MINIMUM 2'-0" LONG. ANGLE MUST BE A36 STEEL.

TYPE SHB DIMENSIONS & RATINGS (ASD)

SIZE	ROD DIA. (RD)		COUNTERBORED HOLE DIA. (CH) x DEPTH (D)		W		A		LATERAL LOAD RATINGS [3]					
									30° - 45° [1]			46° - 60° [1]		
	(in)	(mm)	(in)	(mm)	(in)	(mm)	(in)	(mm)	lbs	kN	kg	lbs	kN	kg
SHB-3/8	3/8	10	3/4 x 3/32	19 x 24	2	51	2	51	1420	6.3	644	1000	4.5	454
SHB-1/2	1/2	13	1 x 5/32	25 x 4	2	51	2	51	1710	7.6	775	1280	5.7	581
SHB-5/8	5/8	16	1 3/16 x 5/32	30 x 4	2 1/8	54	1 15/16	49	1520	6.8	690	1100	4.9	499
SHB-3/4	3/4	19	1 7/16 x 5/32	37 x 4	2 1/4	57	1 7/8	48	1660	7.4	753	1040	4.6	471

1. BRACE ANGLE MEASURED FROM HORIZONTAL.
2. REFER TO PAGE X4.0 FOR STRUT NUT WITH STUD (MW-SSN) WITH BREAK-OFF NUT (MW-BON) OPTION TO STRUT NUT AND HEX BOLT.
3. ATTACHMENT TO STEEL OR OTHER SUBSTRATES (e.g., CONCRETE, WOOD) MAY GOVERN THE DESIGN OF THE OVERALL BRACE ASSEMBLY AND SHALL BE EVALUATED ON A PROJECT BY PROJECT BASIS PER ATTACHMENT LOAD RATINGS IN SECTION N.

MASON WEST, INC.
1601 E. Miraloma Ave. Placentia, CA 92870
TEL (714) 630 - 0701, www.masonwest.com

Jiefu "Jeff" Zhang, SE
California SE No. S5270

PAGE
X2.1

OSTPD REVIEWED FOR CODE COMPLIANCE OPM-0043-13 BY: Jeffrey Kikumoto DATE: 06/23/2016

MASON IND. N.Y. SSB - SEISMIC SOLID BRACE

FM

APPROVED

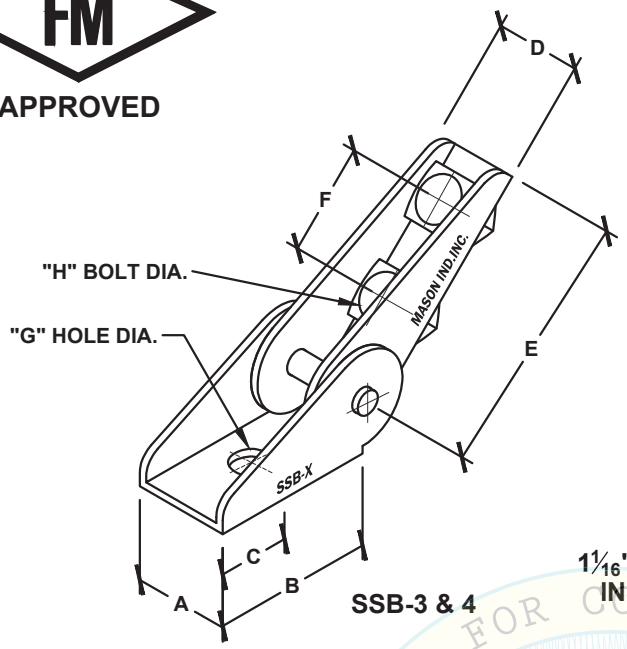

SSB-3 & 4

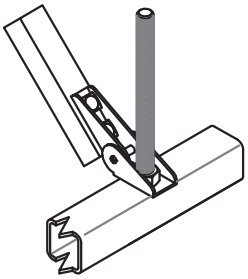

LONGITUDINAL BRACING

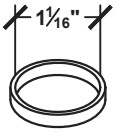

1 1/16" ID SSB-4 STEEL INSERT WASHER

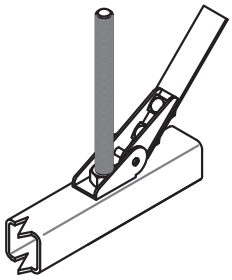

TRANSVERSE BRACING

FINISH:
ALL PARTS ARE ZINC ELECTROPLATED

NOTE: NOT TO BE USED AS A HANGER FOR EQUIPMENT, DUCTWORK OR PIPING.
TO BE USED AS A SEISMIC RESTRAINT ONLY.

REVIEWED FOR CODE COMPLIANCE
OSHPD
OPM-0043-13
BY: Jeffrey Y. Kikumoto
DATE: 06/23/2016
CALIFORNIA BUILDING CODE 2013

BRACE MEMBER AXIAL RATING (ASD) (LBS)

AXIAL MEMBER	MAX LENGTH (FT)		
	5'-0"	9'-6"	14'-6"
L3x3x1/4	14400	6200	3000
L4x4x1/4	20600	13600	6800

NOTE: ANGLE MUST BE A36 STEEL.

TYPE SSB DIMENSIONS (inches **mm**)

SIZE	A		B		C		D		E		F		G		H	
SSB-3	2	51	3 1/2	89	1 3/4	44	1 7/16	37	4 3/4	121	2	51	13/16	21	1/2	19
SSB-4	3 1/8	79	5	127	2 1/2	64	1 15/16	49	5 3/4	146	2 1/4	57	1 5/16	33	5/8	25

TYPE SSB ASSEMBLY RATINGS (ASD)

SIZE [3]	ROD/BOLT SIZE (in)	ROD/BOLT SIZE (mm)	LATERAL LOAD RATINGS [2] 30° - 45° [1] lbs	kN	kg	46° - 60° [1] lbs	kN	kg
SSB-3	3/4	19	5640	25.0	2557	3360	14.9	1523
SSB-4	1	25	6410	28.5	2906	4280	19.0	1940
SSB-4	1 1/4	32	6410	28.5	2906	4280	19.0	1940

1. BRACE ANGLE MEASURED FROM HORIZONTAL.
2. ATTACHMENT TO STEEL OR OTHER SUBSTRATES (e.g., CONCRETE, WOOD) MAY GOVERN THE DESIGN OF THE OVERALL BRACE ASSEMBLY AND SHALL BE EVALUATED ON A PROJECT BY PROJECT BASIS PER ATTACHMENT LOAD RATINGS IN SECTION N.
3. WHEN USING SSB-4 WITH 1" ROD/BOLT, 1 1/16" ID RING IS REQUIRED.

MASON WEST, INC.
1601 E. Miraloma Ave. Placentia, CA 92870
TEL (714) 630 - 0701, www.masonwest.com

Jiefu "Jeff" Zhang, SE
California SE No. S5270

PAGE
X2.2

SSBS / SHB ALTERNATE CONNECTIONS

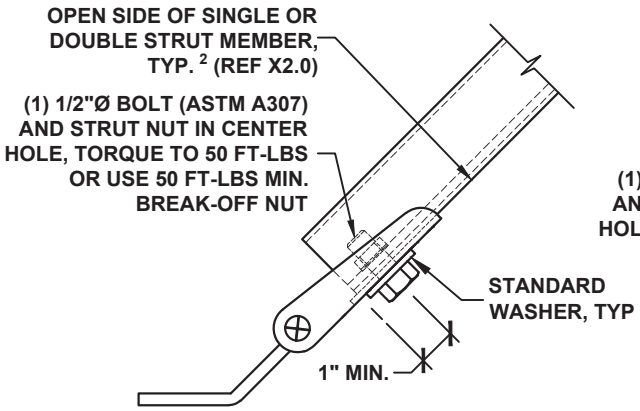

SSBS (1) BOLT ATTACHMENT TO STRUT

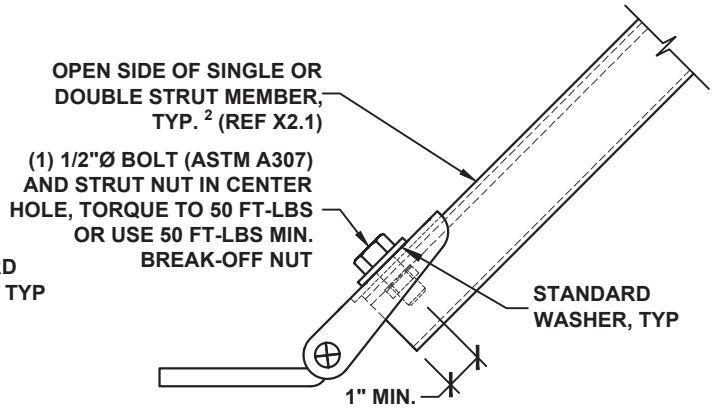

SHB (1) BOLT ATTACHMENT TO STRUT

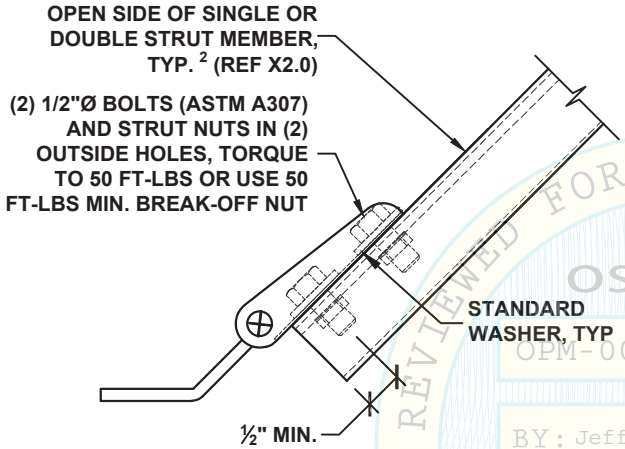

SSBS (2) BOLT ATTACHMENT TO STRUT

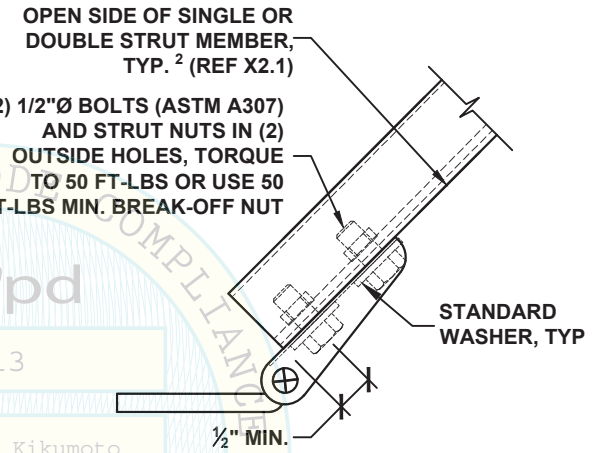

SHB (2) BOLT ATTACHMENT TO STRUT

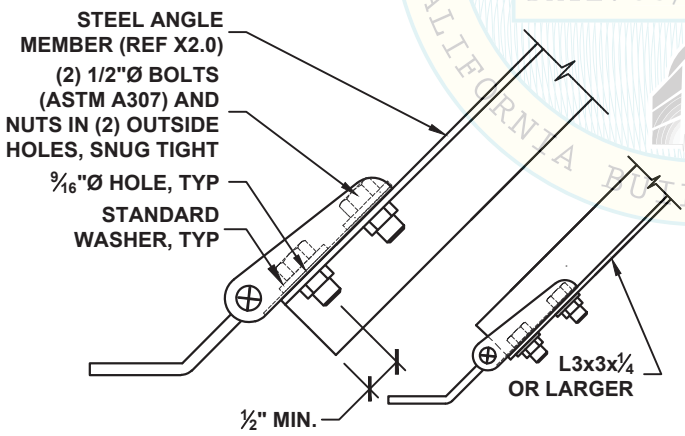

SSBS (2) BOLT ATTACHMENT TO STEEL ANGLE

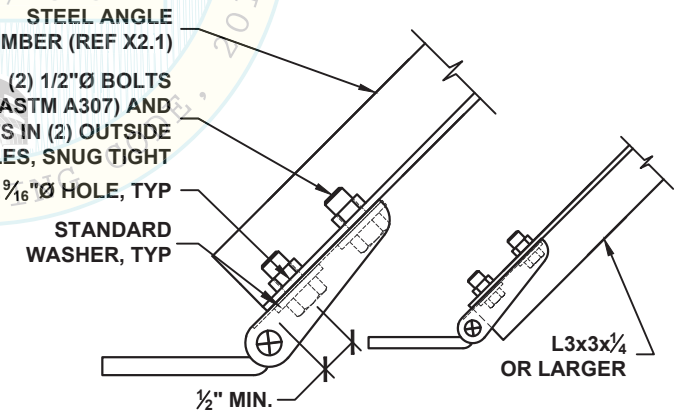

SHB (2) BOLT ATTACHMENT TO STEEL ANGLE

NOTES:

1. MW-SSN AND MW-BON MAY BE SUBSTITUTED FOR ½"Ø BOLT AND STRUT NUT DETAILED ABOVE. (REF PAGE X4.0)
2. FOR INSTALLATION TO CLOSED SIDE OF STRUT MEMBER, USE ½"Ø BOLT(S) (ASTM A307) AND NUTS.

MASON WEST, INC.
1601 E. Miraloma Ave. Placentia, CA 92870
TEL (714) 630 - 0701, www.masonwest.com

Jiefu "Jeff" Zhang, SE
California SE No. S5270

PAGE
X2.3

REVIEWED FOR CODE COMPLIANCE, 2013 CALIFORNIA BUILDING CODE
OSHPD
OPM-0043-13
BY: Jeffrey Y. Kikumoto
DATE: 06/23/2016

MW-KY SHB KEY

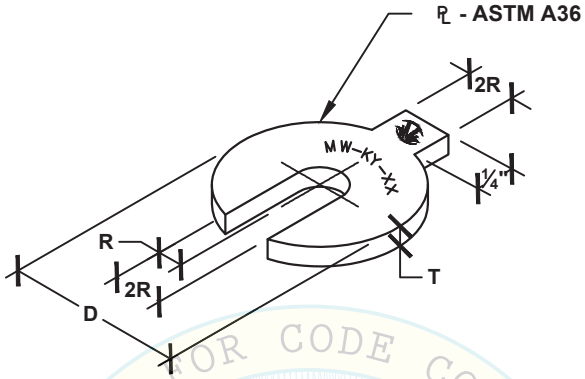

REVIEWED FOR CODE COMPLIANCE
CALIFORNIA BUILDING CODE, 2013
oshpd
OPM-0043-13
Jeffrey Y. Kikumoto
DATE 06/23/2016

MW-KY DIMENSIONS

SIZE	R	D	T
38	3/16	11/16	3/32
50	1/4	15/16	1/8
63	5/16	1 1/8	1/8
75	3/8	1 3/8	1/8

MASON WEST, INC.
1601 E. Miraloma Ave. Placentia, CA 92870
TEL (714) 630 - 0701, www.masonwest.com

Jiefu "Jeff" Zhang, SE
California SE No. S5270

PAGE
X2.4

MASON IND. N.Y. UCC - SEISMIC ROD CLAMPS FOR STRUT CHANNELS

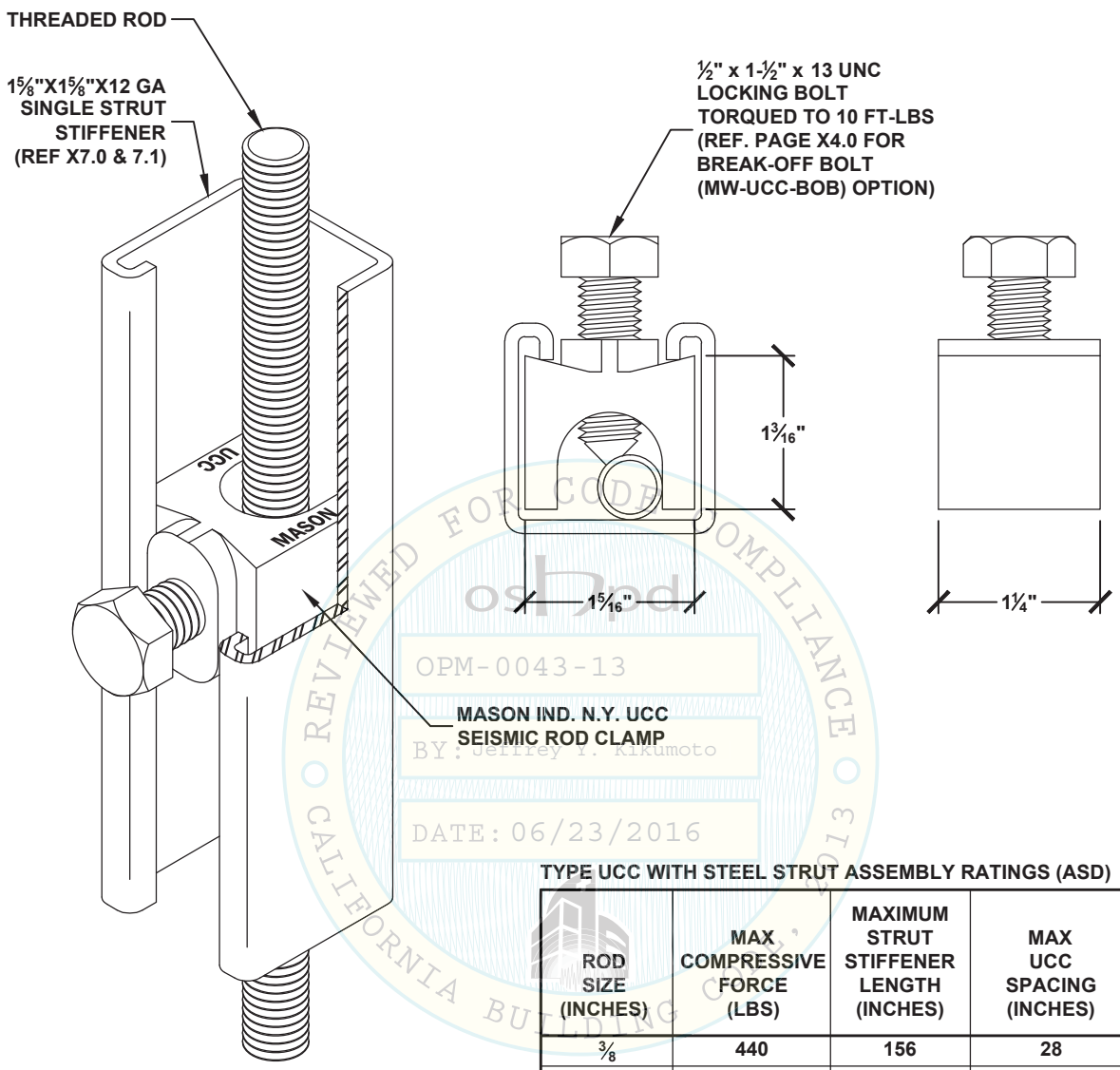

REVIEWED FOR CODE COMPLIANCE
CALIFORNIA BUILDING CODE 2013
OPM-0043-13
BY: Jeffrey T. Kikumoto
DATE: 06/23/2016

TYPE UCC WITH STEEL STRUT ASSEMBLY RATINGS (ASD)

ROD SIZE (INCHES)	MAX COMPRESSIVE FORCE (LBS)	MAXIMUM STRUT STIFFENER LENGTH (INCHES)	MAX UCC SPACING (INCHES)
⅜	440	156	28
½	735	156	38
⅝	1155	156	48
¾	1700	156	57
¾	3130	84	42

MASON WEST, INC.
1601 E. Miraloma Ave. Placentia, CA 92870
TEL (714) 630 - 0701, www.masonwest.com

Jiefu "Jeff" Zhang, SE
California SE No. S5270

PAGE
X3.0

MASON IND. N.Y. SRC - SEISMIC ROD CLAMPS FOR STEEL ANGLES

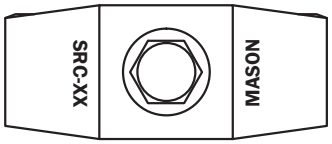

PRODUCT IDENTIFICATION

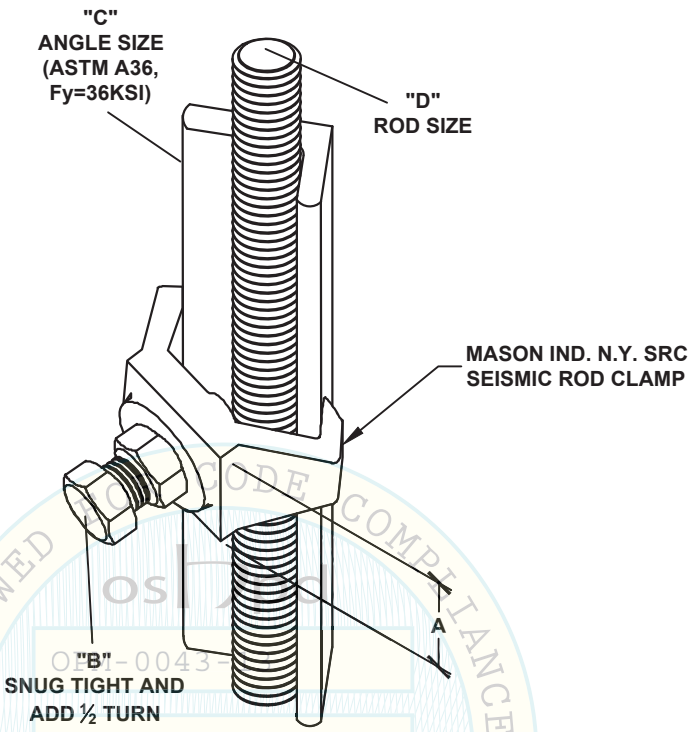

REVIEWED FOR CODE COMPLIANCE
OSHPD
OPM-0043-13
BY: Jeffrey Y. Kikumoto
DATE: 06/23/2016
CALIFORNIA BUILDING CODE, 2013

MASON IND. N.Y. SRC - SEISMIC ROD CLAMP FOR STEEL ANGLE STIFFENER

SIZE	DIMENSIONS - INCHES (MM)				RATINGS (ASD)		MAXIMUM SRC SPACING (INCHES)
	A	B	C	D	MAXIMUM COMPRESSION FORCE (LBS)	MAXIMUM LENGTH (INCHES)	
SRC - 1½	1 9/16 (40)	⅝ x 2 LONG (16 x 51 LONG)	1½x1½x¼ (38 x 38 x 6)	⅞	2339	132	66
				1	2945	120	77
SRC - 2	1¾ (44)	⅝ x 3 LONG (16 x 76 LONG)	2x2x¼ (51 x 51 x 6)	1	3990	132	66
				1¼	4686	120	95
				1¼	8458	84	71

MASON WEST, INC.
1601 E. Miraloma Ave. Placentia, CA 92870
TEL (714) 630 - 0701, www.masonwest.com

Jiefu "Jeff" Zhang, SE
California SE No. S5270

PAGE
X3.1

BREAK-OFF BOLT AND NUT HARDWARE

½" DIA BREAK-OFF BOLT FOR MASON IND. N.Y. UCC CLAMP (REF. X3.0) (NUT BREAKS OFF AT MIN. 10 FT-LBS)

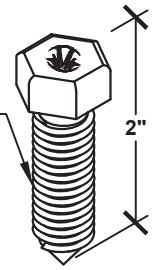

BREAK-OFF NUT FOR MASON IND. N.Y. SCB(H) CABLE BRACE BRACKETS (REF. X1.0 & X1.1) & MW-SPC PIPE CLAMPS (REF. X8.3 & X8.3.1)

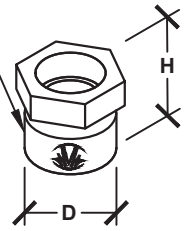

MW-SCB-BON DIMENSIONS

SIZE	D	H	FOR USE WITH	MINIMUM NUT BREAK-OFF TORQUE
5/8	15/16"	31/32"	SCB(H)-0,1	30 FT-LBS
3/4	1 1/16"	31/32"	SCB(H)-2	45 FT-LBS

MATERIAL:
AISI 12L14 CARBON STEEL
(F_y = 60 KSI (MIN), F_T =78 KSI (MIN))

MW-UCC-BOB

½" DIA STRUT NUT WITH STUD (TESTED TO WEDGE TENSION TESTING METHOD IN ASTM F606)

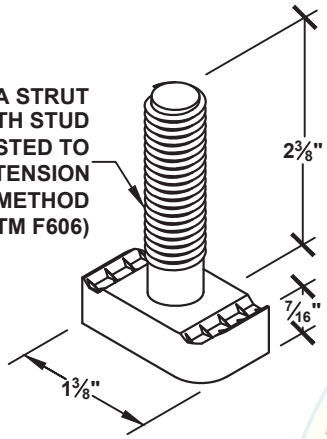

MW-SCB-BON & MW-SPC-BON

MATERIAL:
1020 MILD STEEL
(SPEC. GB 700 GRADE Q235B)
UNLESS OTHERWISE NOTED.

MW-SPC-BON DIMENSIONS

SIZE	D	H	FOR USE WITH	MINIMUM NUT BREAK-OFF TORQUE
3/8	9/16"	21/32"	SPC-13,15,20	20 FT-LBS
1/2	12/16"	26/32"	SPC-25,30,40,50	45 FT-LBS
5/8	15/16"	31/32"	SPC-60,80	75 FT-LBS
3/4	1 3/16"	1"	SPC-100,120	100 FT-LBS

NOTE: EMBLEM STAMPED ON HEAD OF MW-SSN-1/2

½" DIA BREAK-OFF NUT (NUT BREAKS OFF AT MIN. 50 FT-LBS)

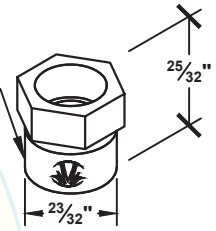

MW-BON-1/2

MW-SSN-1/2

1 5/8X1 5/8X12 GA SINGLE STRUT OR LARGER OF SAME GAGE (NO DOUBLE STRUT FOR TENSION LOADS)

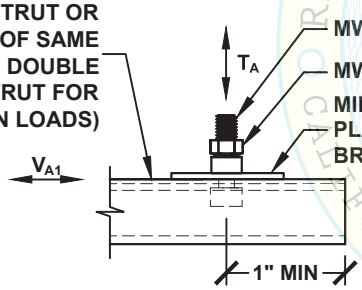

SHEAR LOAD PARALLEL TO STRUT

MW-SSN-1/2 & MW-BON-1/2 RATINGS (ASD)

TENSION, (T_A)	SHEAR, (V_{A1})	SHEAR, (V_{A2})
2620 LBS	1630 LBS	810 LBS

NOTE:
1. RATING ARE FOR (1) ATTACHMENT ONLY. CONDITIONS WITH MULTIPLE ATTACHMENTS WERE NOT TESTED.
2. COMBINED TENSION AND SHEAR LOADS SHALL BE CHECKED FOR UNITY, $T/T_A + V_1/V_{A1} + V_2/V_{A2} \leq 1.0$
3. ONLY (1) MW-SSN-1/2 SHALL OCCUR WITHIN SPAN S AND ANY ADJACENT MW-SSN-1/2 SHALL BE A MINIMUM OF 4" AWAY.
4. FOR SHEAR LOADS APPLIED AT AN ANGLE UP TO 45°, THE 3" MIN. EDGE DISTANCE IS REQUIRED.

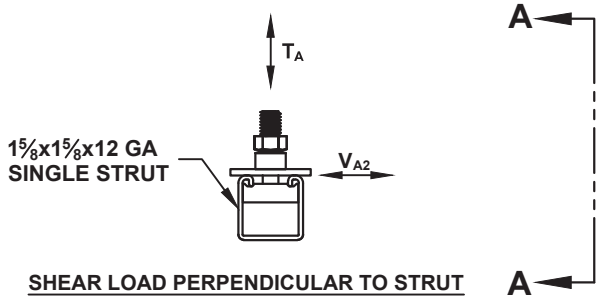

SHEAR LOAD PERPENDICULAR TO STRUT

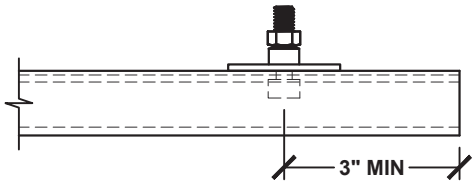

SECTION A-A

OSHPD OPM-0043-13 BY: Jeffrey Y. Kikumoto 06/23/2016 CODE COMPLIANCE 2013 CALIFORNIA BUILDING

MASON WEST, INC.
1601 E. Miraloma Ave. Placentia, CA 92870
TEL (714) 630 - 0701, www.masonwest.com

Jiefu "Jeff" Zhang, SE
California SE No. S5270

PAGE
X4.0

MW-PAL-A-MD CONCRETE INSERT

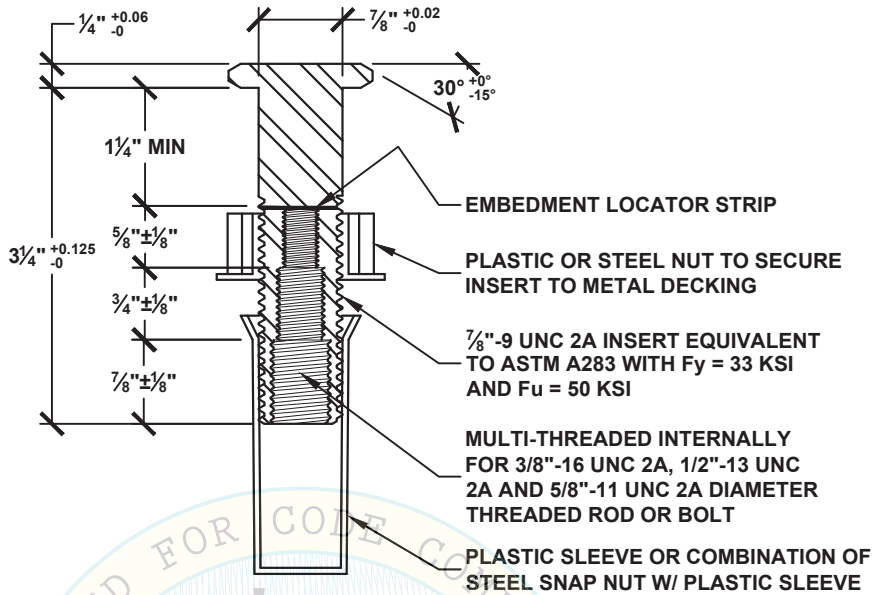

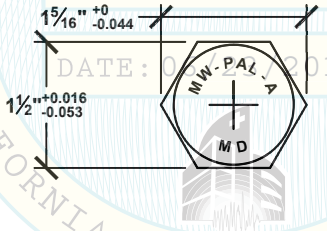

REVIEWED FOR CODE COMPLIANCE
CALIFORNIA BUILDING CODE, 2013
osHpd
OPM-0043-13
BY: Jeffrey Y. Kikumoto
DATE: 06/23/2016

SEE PAGE X5.1, X5.2.ASD AND X5.2.SD FOR INSERT DESIGN CAPACITY

MASON WEST, INC.
1601 E. Miraloma Ave. Placentia, CA 92870
TEL (714) 630 - 0701, www.masonwest.com

Jiefu "Jeff" Zhang, SE
California SE No. S5270

PAGE
X5.0.MD

MW-PAL-A-CS CONCRETE INSERT

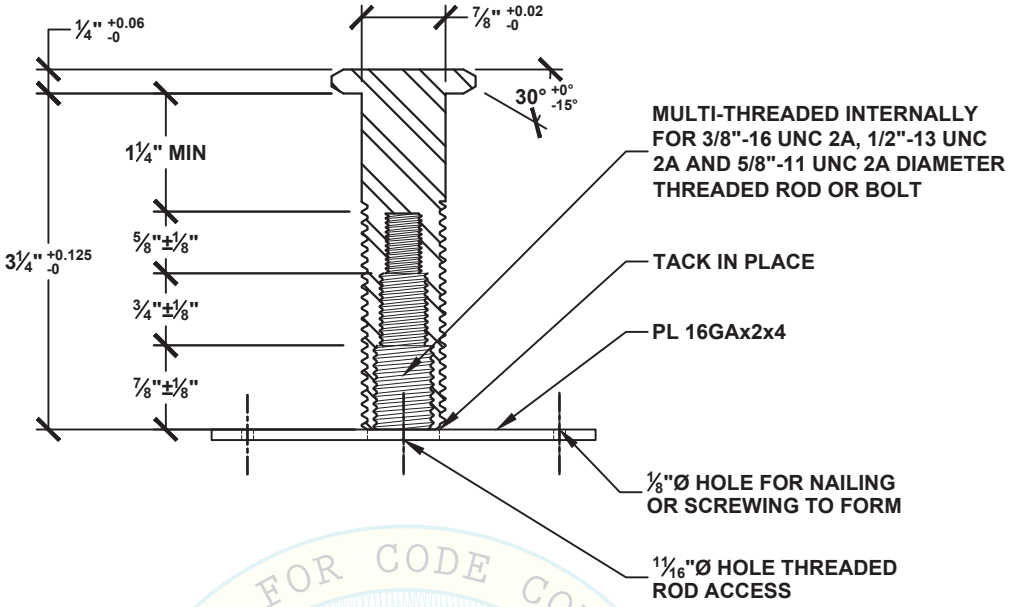

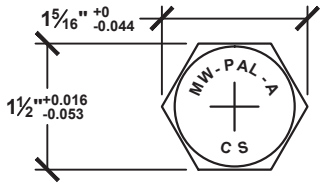

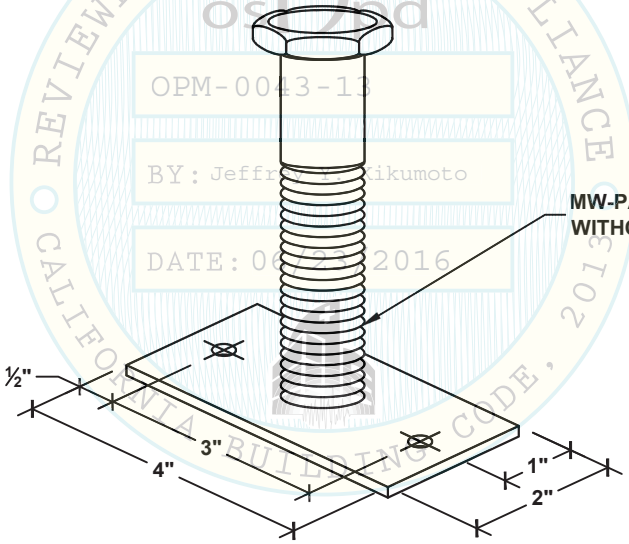

REVIEWED FOR CODE COMPLIANCE
CALIFORNIA BUILDING CODE, 2013
OPM-0043-13
BY: Jeffrey Kikumoto
DATE: 06/23/2016

SEE PAGE X5.2.1 FOR INSERT DESIGN CAPACITY

MASON WEST, INC.
1601 E. Miraloma Ave. Placentia, CA 92870
TEL (714) 630 - 0701, www.masonwest.com

Jiefu "Jeff" Zhang, SE
California SE No. S5270

PAGE
X5.0.CS

MW-CDI CONCRETE INSERT

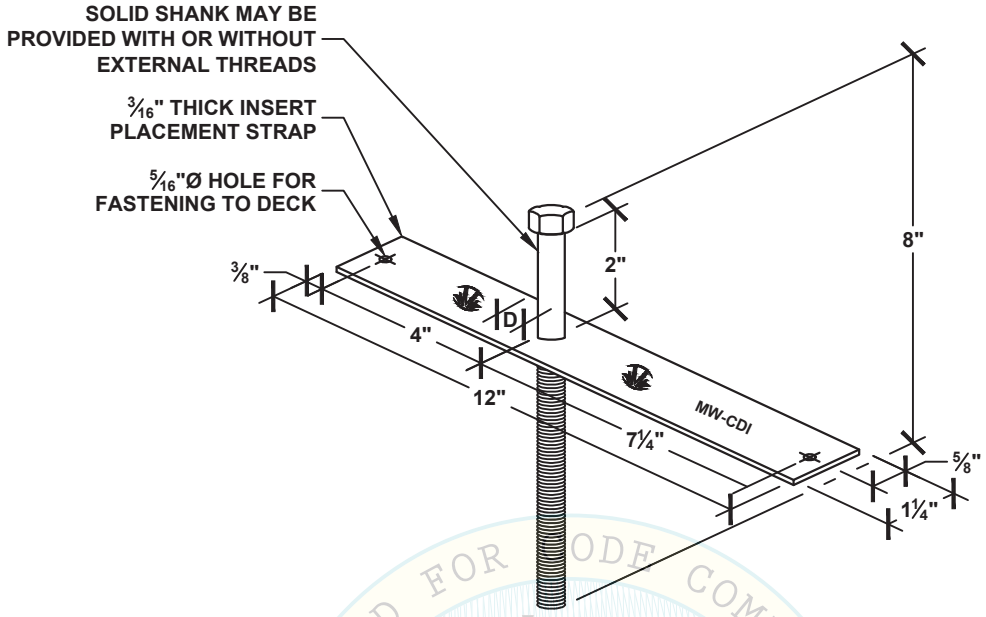

REVIEWED FOR CODE COMPLIANCE
CALIFORNIA BUILDING CODE, 2013
OSHPD
OPM-0043-13
BY: Jeffrey Y. Kikumoto
DATE: 06/23/2016

MODEL	D	ASTM A307 GR A BOLT CLASS 2A
MW-CDI-38	3/8"	3/8"Ø - 16 UNC THREADS
MW-CDI-50	1/2"	1/2"Ø - 13 UNC THREADS
MW-CDI-63	5/8"	5/8"Ø - 11 UNC THREADS
MW-CDI-75	3/4"	3/4"Ø - 10 UNC THREADS

SEE PAGE X5.4 FOR INSERT DESIGN CAPACITY

MASON WEST, INC.
1601 E. Miraloma Ave. Placentia, CA 92870
TEL (714) 630 - 0701, www.masonwest.com

Jiefu "Jeff" Zhang, SE
California SE No. S5270

PAGE
X5.0.1

MW-CDI-B CONCRETE INSERT

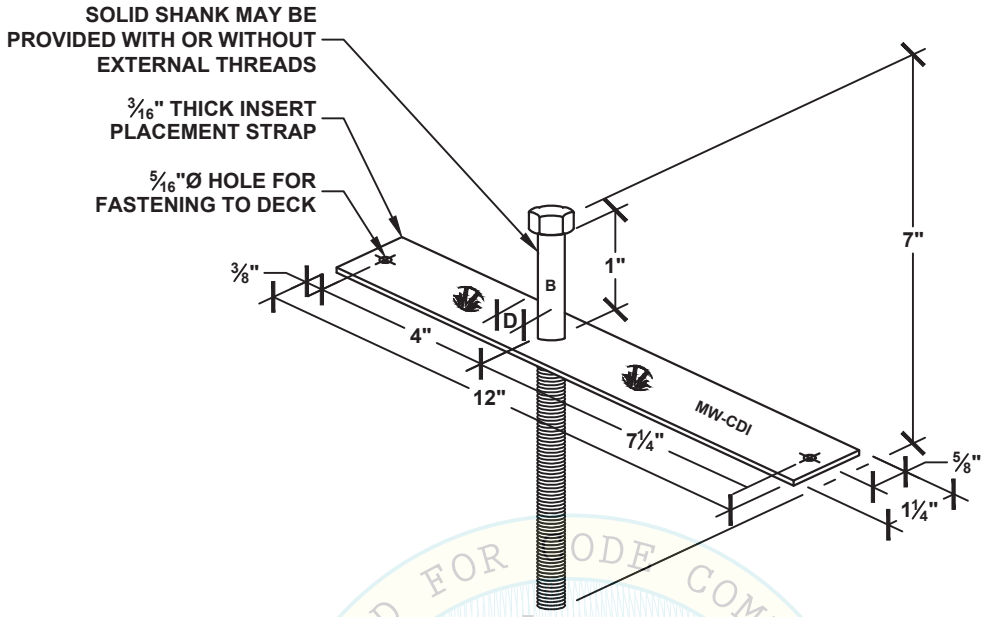

REVIEWED FOR CODE COMPLIANCE
CALIFORNIA BUILDING CODE, 2013
osHpd
OPM-0043-13
BY: Jeffrey Y. Kikumoto
DATE: 06/23/2016

MODEL	D	ASTM A307 GR A BOLT CLASS 2A
MW-CDI-B-38	3/8"	3/8"Ø - 16 UNC THREADS
MW-CDI-B-50	1/2"	1/2"Ø - 13 UNC THREADS
MW-CDI-B-63	5/8"	5/8"Ø - 11 UNC THREADS
MW-CDI-B-75	3/4"	3/4"Ø - 10 UNC THREADS

SEE PAGE X5.6 FOR INSERT DESIGN CAPACITY

MASON WEST, INC.
1601 E. Miraloma Ave. Placentia, CA 92870
TEL (714) 630 - 0701, www.masonwest.com

Jiefu "Jeff" Zhang, SE
California SE No. S5270

PAGE
X5.0.2

MW-PAL-A-MD CONCRETE INSERT

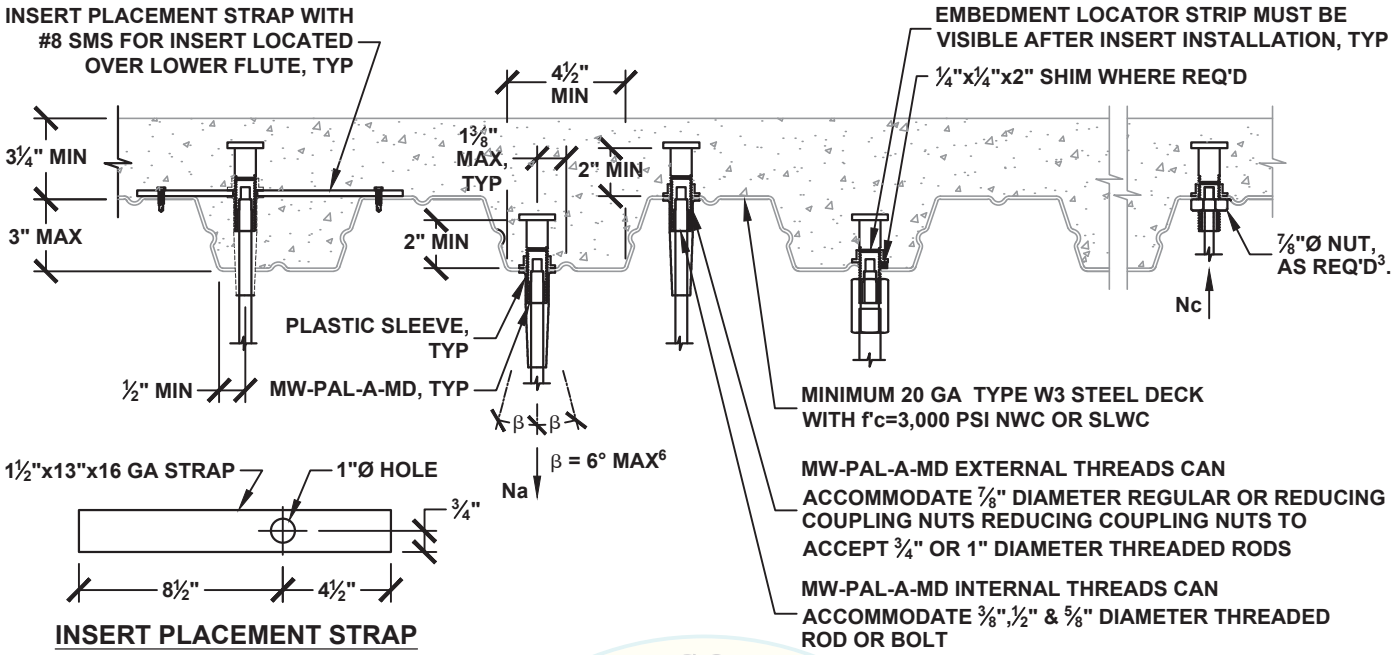

INSERT PLACEMENT STRAP

MW-PAL-A-MD STRENGTH DESIGN (SD) AND ALLOWABLE STRESS DESIGN (ASD) VALUES FOR CONCRETE FILLED METAL DECKS [1,2,3,4,5,6,7,8]

MW-PAL-A-MD WITH ASTM A36 THREADED ROD (REF. X5.0.MD FOR MORE INFO.)	TENSION CAPACITY (NON-SEISMIC)				TENSION CAPACITY (SEISMIC)			
	STRENGTH DESIGN (SD)		ALLOWABLE STRESS DESIGN (ASD)		STRENGTH DESIGN (SD)		ALLOWABLE STRESS DESIGN (ASD)	
	LOWER FLUTE $Na_{(SD)}$ (LBS)	UPPER FLUTE $Na_{(SD)}$ (LBS)	LOWER FLUTE $Na_{(ASD)}$ (LBS)	UPPER FLUTE $Na_{(ASD)}$ (LBS)	LOWER FLUTE $Na_{(SD)}$ (LBS)	UPPER FLUTE $Na_{(SD)}$ (LBS)	LOWER FLUTE $Na^{8}_{(ASD)}$ (LBS)	UPPER FLUTE $Na^{8}_{(ASD)}$ (LBS)
⅜"	1480	3230	1030	2260	1110	2420	930	2030
½" ⅝" ¾" ⅞"	1480	4120	1030	2880	1110	3090	930	2590

1 - INSERT REQUIRED SPACING IS 6¾". HOWEVER, INSERTS MAY BE INSTALLED AT 3½" MINIMUM SPACING PROVIDED THE COMBINED DEMAND OF MULTIPLE INSERTS DOES NOT EXCEED THE CAPACITY OF ONE SINGLE INSERT. INSERT REQUIRED END DISTANCE IS 5¼".
2 - CONNECTION OF THREADED RODS, REGULAR NUTS AND COUPLING NUTS TO MW-PAL-A-MD INSERTS SHALL NOT BE TORQUED, SNUG TIGHT ONLY.
3 - ⅞"Ø NUT IS ONLY REQUIRED WHERE THE INSERT IS INSTALLED AT THE UPPER FLUTE AND THERE IS A VERTICAL UPWARD LOAD EXCEEDING 390 LBS IN ALLOWABLE STRESS DESIGN. NUT SHALL BE REG., JAM OR SLIP-ON TYPE. BEVEL WASHER IS REQUIRED BETWEEN NUT AND DECKING WHEN MW-PAL-A-MD IS INSTALLED WITH AN ANGLE EXCEEDING 3° OFF VERTICAL.
4 - DESIGN CAPACITY IS BASED ON THE SMALLER OF THE CONCRETE INSERT AND THE THREADED ROD STRENGTH.
5 - INSERT INSTALLED ON THE UPPER FLUTE CAN BE ANYWHERE ALONG THE FLUTE, TYP.
6 - THE 6° ALLOWABLE INSTALLED ANGLE IS PERMITTED FOR ALL INSTALLATIONS.
7 - THIS INSERT MAY BE USED WITH ANY OTHER OSHPD OPA APPROVED SYSTEM PROVIDED THE RESULTANT LOADING OF THE JOB-SPECIFIC APPLICATION DOES NOT EXCEED THE VALUES STATED ABOVE.
8 - OVERSTRENGTH FACTOR MUST BE USED WHEN USING $Na_{(ASD)}$ VALUES FROM TABLE. WHERE OVERSTRENGTH FACTOR IS NOT USED, DIVIDE $Na_{(ASD)}$ VALUES FROM TABLE BY 1.2.

MASON WEST, INC.
1601 E. Miraloma Ave. Placentia, CA 92870
TEL (714) 630 - 0701, www.masonwest.com

Jiefu "Jeff" Zhang, SE
California SE No. S5270

PAGE
X5.1

MW-PAL-A-MD CONCRETE INSERT

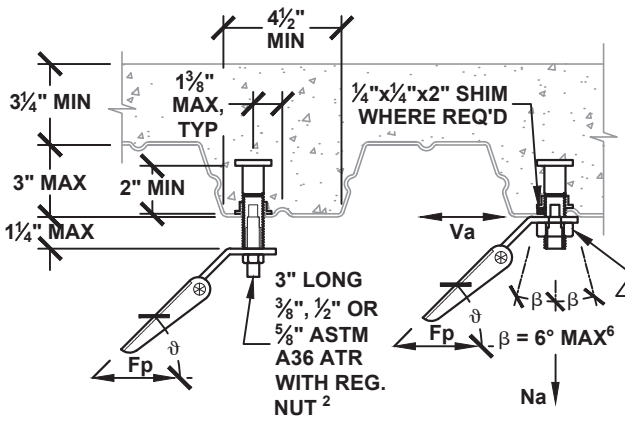

LOWER FLUTE INSTALLATION

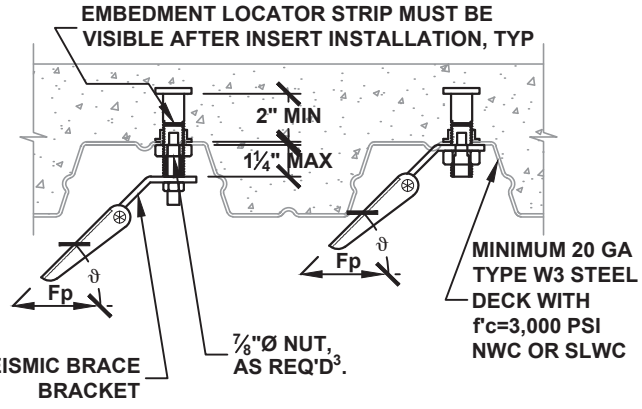

UPPER FLUTE INSTALLATION5

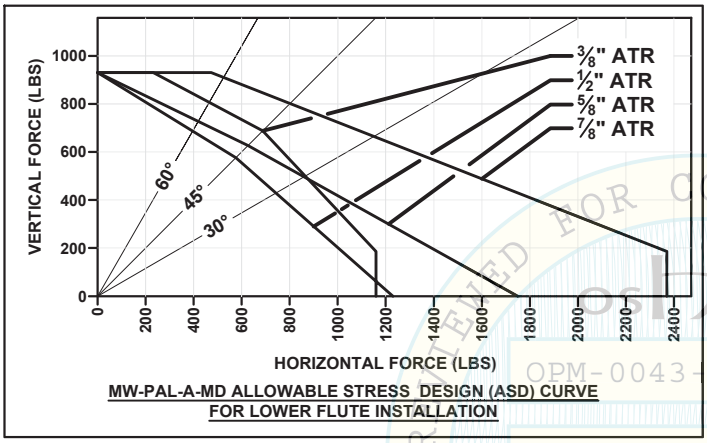

MW-PAL-A-MD ALLOWABLE STRESS DESIGN (ASD) CURVE FOR LOWER FLUTE INSTALLATION

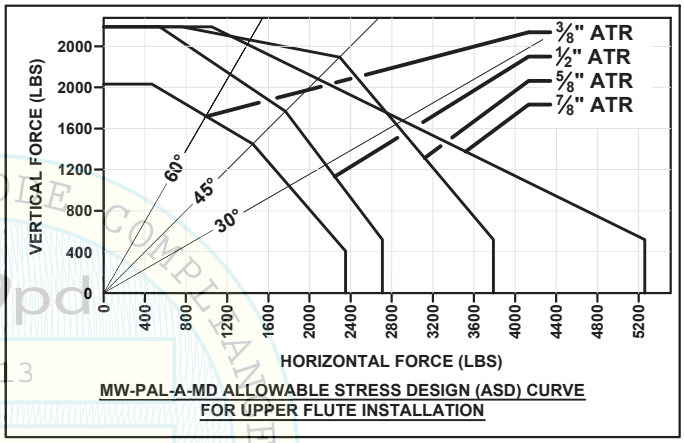

MW-PAL-A-MD ALLOWABLE STRESS DESIGN (ASD) CURVE FOR UPPER FLUTE INSTALLATION

MW-PAL-A-MD ALLOWABLE STRESS DESIGN (ASD) VALUES FOR CONC. FILLED METAL DECKS[1,2,3,4,5,6,7,8]

MW-PAL-A-MD WITH ASTM A36 THREADED ROD (REF. X5.0.MD FOR MORE INFO.)	LOWER FLUTE					UPPER FLUTE				
	TENSION $Na_{(ASD)}$ (LBS)	SHEAR $Va_{(ASD)}$ (LBS)	$Fp_{(ASD)}$ @ BRACE ANGLE ϑ (LBS)			TENSION $Na_{(ASD)}$ (LBS)	SHEAR $Va_{(ASD)}$ (LBS)	$Fp_{(ASD)}$ @ BRACE ANGLE ϑ (LBS)		
			30°	45°	60°			30°	45°	60°
⅜" ATR W/ NUT	930	1160	860	690	470	2030	2350	1800	1450	990
½" ATR W/ NUT	930	1230	745	580	400	2590	2710	2160	1770	1230
⅝" ATR W/ NUT	930	1750	860	630	420	2590	3790	2840	2290	1420
⅞" NUT	930	2370	1150	800	530	2590	5260	2910	2080	1400

1 - INSERT REQUIRED SPACING IS 6¾". HOWEVER, INSERTS MAY BE INSTALLED AT 3½" MINIMUM SPACING PROVIDED THE COMBINED DEMAND OF MULTIPLE INSERTS DOES NOT EXCEED THE CAPACITY OF ONE SINGLE INSERT. INSERT REQUIRED END DISTANCE IS 5¼".
2 - CONNECTION OF THREADED RODS, REGULAR NUTS AND COUPLING NUTS TO MW-PAL-A-MD INSERTS SHALL NOT BE TORQUED, SNUG TIGHT ONLY.
3 - ⅞"Ø NUT IS ONLY REQUIRED WHERE THE INSERT IS INSTALLED AT THE UPPER FLUTE AND THERE IS A VERTICAL UPWARD LOAD EXCEEDING 450 LBS IN ALLOWABLE STRESS DESIGN. NUT SHALL BE REG., JAM OR SLIP-ON TYPE. BEVEL WASHER IS REQUIRED BETWEEN NUT AND DECKING WHEN MW-PAL-A-MD IS INSTALLED WITH AN ANGLE EXCEEDING 3° OFF VERTICAL.
4 - DESIGN CAPACITY IS BASED ON THE SMALLER OF THE CONCRETE INSERT AND THE THREADED ROD STRENGTH.
5 - INSERT INSTALLED ON THE UPPER FLUTE CAN BE ANYWHERE ALONG THE FLUTE.
6 - THE 6° ALLOWABLE INSTALLED ANGLE IS PERMITTED FOR ALL INSTALLATIONS.
7 - THIS INSERT MAY BE USED WITH ANY OTHER OSHPD OPA APPROVED SYSTEM PROVIDED THE RESULTANT LOADING OF THE JOB-SPECIFIC APPLICATION DOES NOT EXCEED THE VALUES STATED ABOVE.
8 - OVERSTRENGTH FACTOR MUST BE USED WHEN USING $Va_{(ASD)}$ AND $Na_{(ASD)}$ VALUES FROM TABLE. WHERE OVERSTRENGTH FACTOR IS NOT USED, DIVIDE $Va_{(ASD)}$ AND $Na_{(ASD)}$ VALUES FROM TABLE BY 1.2.

TO USE THE DESIGN CURVE
A - CALCULATE THE VERTICAL AND HORIZONTAL REQ'D FORCES.
B - PLOT HORIZONTAL LOAD vs VERTICAL LOAD.
C - IF THE POINT IS BELOW THE SOLID CURVE THEN THE ANCHOR IS ADEQUATE.

TO USE EQUATION
A - CALCULATE THE VERTICAL AND HORIZONTAL REQ'D FORCES, Nua AND Vua RESPECTIVELY.
B - Nua/Na + Vua/Va ≤ 1.0 (LOWER FLUTE)
Nua/Na + Vua/Va ≤ 1.2 (UPPER FLUTE)
C - THE DESIGN CAPACITY Na AND Va HAS BEEN TABULATED WITH THE APPROPRIATE REDUCTION FACTORS FOR SEISMIC LOADS AND CONCRETE AND STEEL STRENGTH, ADDITIONAL REDUCTION FACTORS NEED NOT APPLY.

MASON WEST, INC.
1601 E. Miraloma Ave. Placentia, CA 92870
TEL (714) 630 - 0701, www.masonwest.com

Jiefu "Jeff" Zhang, SE
California SE No. S5270

PAGE
X5.2.ASD

RECEIVED FOR CODE COMPLIANCE
OSHPD
OPM-0043-13
06/23/2016

MW-PAL-A-MD CONCRETE INSERT

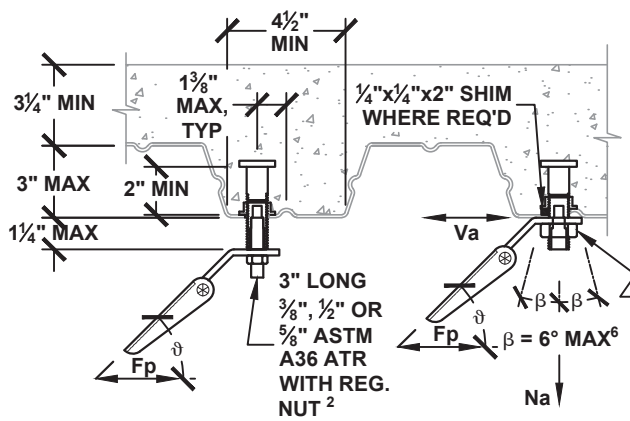

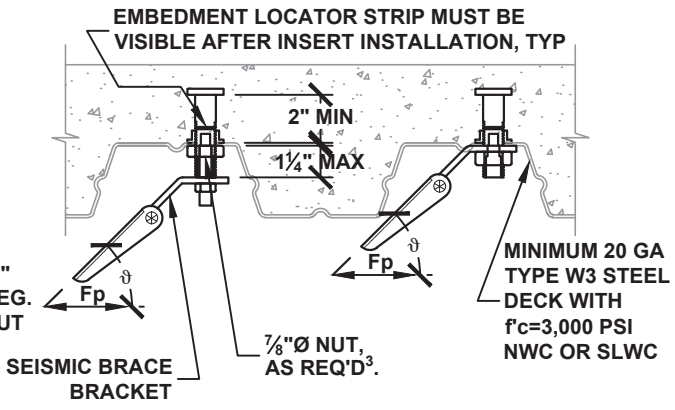

LOWER FLUTE INSTALLATION

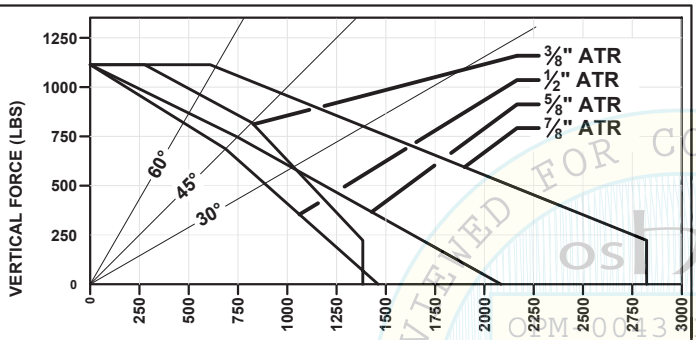

MW-PAL-A-MD STRENGTH DESIGN (SD) CURVE FOR LOWER FLUTE INSTALLATION

UPPER FLUTE INSTALLATION

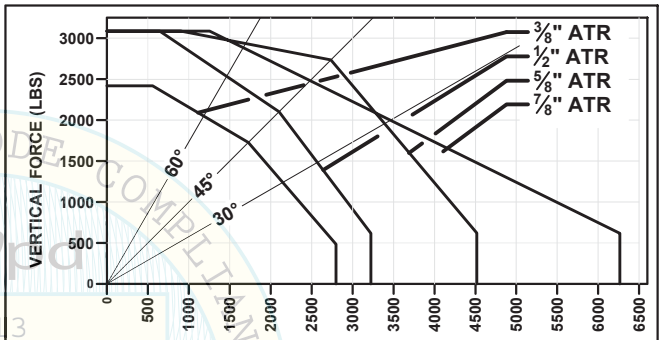

MW-PAL-A-MD STRENGTH DESIGN (SD) CURVE FOR UPPER FLUTE INSTALLATION

REVIEWED FOR CODE COMPLIANCE OSHPD OPM 0043-13 BY: Jeffrey Y. Kikumoto DATE: 06/23/2016 OSHPD OFFICE OF STATEWIDE HEALTH PLANNING AND DEVELOPMENT

MW-PAL-A-MD STRENGTH DESIGN (SD) VALUES FOR CONCRETE FILLED METAL DECKS [1,2,3,4,5,6,7]

MW-PAL-A-MD WITH ASTM A36 THREADED ROD (REF. X5.0.MD FOR MORE INFO.)	LOWER FLUTE					UPPER FLUTE				
	TENSION $Na_{(SD)}$ (LBS)	SHEAR $Va_{(SD)}$ (LBS)	$Fp_{(SD)}$ @ BRACE ANGLE ϑ (LBS)			TENSION $Na_{(SD)}$ (LBS)	SHEAR $Va_{(SD)}$ (LBS)	$Fp_{(SD)}$ @ BRACE ANGLE ϑ (LBS)		
			30°	45°	60°			30°	45°	60°
⅜" ATR W/ NUT	1115	1380	1030	820	560	2420	2795	2150	1730	1180
½" ATR W/ NUT	1115	1460	885	690	475	3085	3220	2570	2100	1460
⅝" ATR W/ NUT	1115	2080	1025	740	500	3085	4515	3390	2730	1690
⅞" NUT	1115	2820	1390	970	640	3085	6265	3460	2480	1670

1 - INSERT REQUIRED SPACING IS 6¾". HOWEVER, INSERTS MAY BE INSTALLED AT 3½" MINIMUM SPACING PROVIDED THE COMBINED DEMAND OF MULTIPLE INSERTS DOES NOT EXCEED THE CAPACITY OF ONE SINGLE INSERT. INSERT REQUIRED END DISTANCE IS 5¼".
2 - CONNECTION OF THREADED RODS, REGULAR NUTS AND COUPLING NUTS TO MW-PAL-A-MD INSERTS SHALL NOT BE TORQUED, SNUG TIGHT ONLY.
3 - ⅞"Ø NUT IS ONLY REQUIRED WHERE THE INSERT IS INSTALLED AT THE UPPER FLUTE AND THERE IS A VERTICAL UPWARD LOAD EXCEEDING 550 LBS IN STRENGTH DESIGN. NUT SHALL BE REG., JAM OR SLIP-ON TYPE. BEVEL WASHER IS REQUIRED BETWEEN NUT AND DECKING WHEN MW-PAL-A-MD IS INSTALLED WITH AN ANGLE EXCEEDING 3° OFF VERTICAL.
4 - DESIGN CAPACITY IS BASED ON THE SMALLER OF THE CONCRETE INSERT AND THE THREADED ROD STRENGTH.
5 - INSERT INSTALLED ON THE UPPER FLUTE CAN BE ANYWHERE ALONG THE FLUTE.
6 - THE 6° ALLOWABLE INSTALLED ANGLE IS PERMITTED FOR ALL INSTALLATIONS.
7 - THIS INSERT MAY BE USED WITH ANY OTHER OSHPD OPA APPROVED SYSTEM PROVIDED THE RESULTANT LOADING OF THE JOB-SPECIFIC APPLICATION DOES NOT EXCEED THE VALUES STATED ABOVE.

TO USE THE DESIGN CURVE
A - CALCULATE THE VERTICAL AND HORIZONTAL REQ'D FORCES.
B - PLOT HORIZONTAL LOAD vs VERTICAL LOAD.
C - IF THE POINT IS BELOW THE SOLID CURVE THEN THE ANCHOR IS ADEQUATE.

TO INTERACTION EQUATION
A - CALCULATE THE VERTICAL AND HORIZONTAL REQ'D FORCES, Nua AND Vua RESPECTIVELY.
B - Nua/Na + Vua/Va ≤ 1.0 (LOWER FLUTE) Nua/Na + Vua/Va ≤ 1.2 (UPPER FLUTE)
C - THE DESIGN CAPACITY Na AND Va HAS BEEN TABULATED WITH THE APPROPRIATE REDUCTION FACTORS FOR SEISMIC LOADS AND CONCRETE AND STEEL STRENGTH, ADDITIONAL REDUCTION FACTORS NEED NOT APPLY.

MASON WEST, INC.
1601 E. Miraloma Ave. Placentia, CA 92870
TEL (714) 630 - 0701, www.masonwest.com

Jiefu "Jeff" Zhang, SE
California SE No. S5270

PAGE
X5.2.SD

MW-PAL-A-CS CONCRETE INSERT

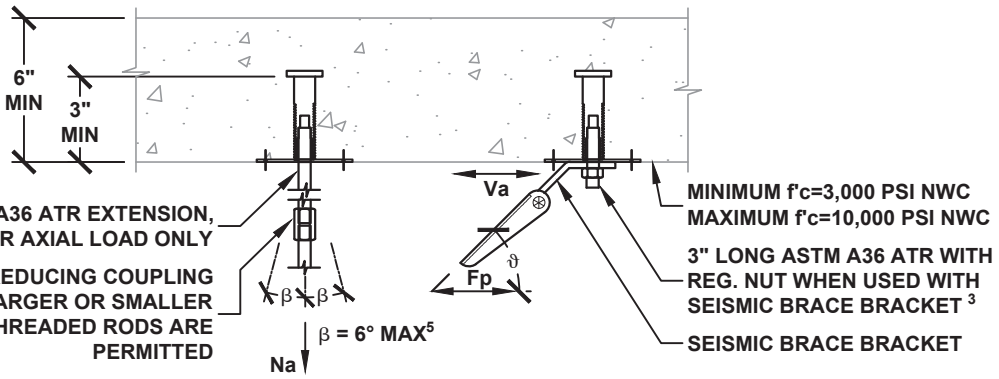

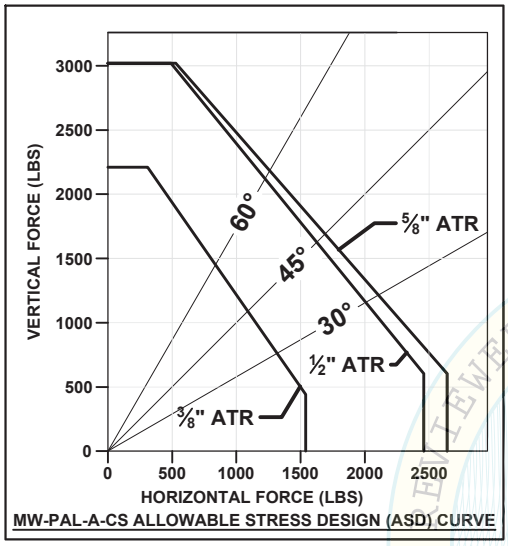

MW-PAL-A-CS ALLOWABLE STRESS DESIGN (ASD) CURVE

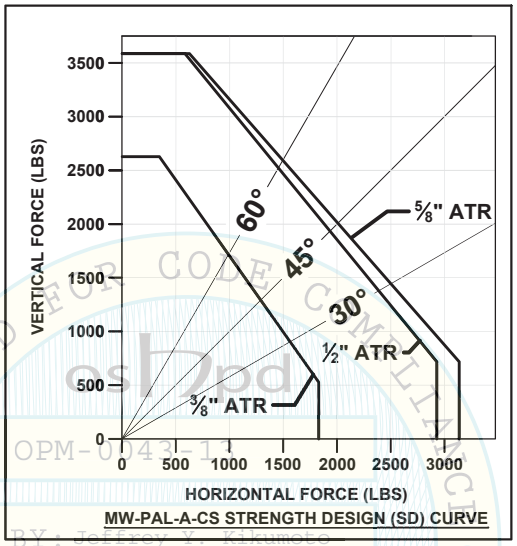

MW-PAL-A-CS STRENGTH DESIGN (SD) CURVE

TO USE THE DESIGN CURVE

A - CALCULATE THE VERTICAL AND HORIZONTAL REQ'D FORCES.
B - PLOT HORIZONTAL LOAD vs VERTICAL LOAD.
C - IF THE POINT IS BELOW THE CURVE THEN THE ANCHOR IS ADEQUATE.

TO USE THE ACI318 D.7.3 INTERACTION EQUATION

A - CALCULATE THE VERTICAL AND HORIZONTAL REQ'D FORCES, Nua AND Vua RESPECTIVELY.
B - Nua/Na + Vua/Va ≤ 1.2
C - THE DESIGN CAPACITY Na AND Va HAS BEEN TABULATED WITH THE APPROPRIATE REDUCTION FACTORS FOR SEISMIC LOADS AND CONCRETE AND STEEL STRENGTH, ADDITIONAL REDUCTION FACTORS NEED NOT APPLY.

OSHPD REVIEWED FOR CODE COMPLIANCE
OPM-0043-13
DATE: 06/23/2016
BY: Jeffrey Y. Kikumoto
OSHPD PREAPPROVAL BUILDING CODE

MW-PAL-A-CS STRENGTH DESIGN (SD) AND ALLOWABLE STRESS DESIGN (ASD) VALUES FOR CONCRETE SLAB [1,2,3,4,5,6,7]

MW-PAL-A-CS WITH ASTM A36 THREADED ROD (REF. X5.0.CS FOR MORE INFO.)	REQ'D EDGE C (IN) AND SPACING S (IN)				ALLOWABLE STRESS DESIGN CAPACITY (ASD)					STRENGTH DESIGN CAPACITY (SD)				
	FOR TENSION		FOR SHEAR		TENSION $Na^{7}_{(ASD)}$ (LBS)	SHEAR $Va^{7}_{(ASD)}$ (LBS)	$Fp^{7}_{(ASD)}$ @ BRACE ANGLE ϑ (LBS)			TENSION $Na_{(SD)}$ (LBS)	SHEAR $Va_{(SD)}$ (LBS)	$Fp_{(SD)}$ @ BRACE ANGLE ϑ (LBS)		
	C	S	C	S			30°	45°	60°			30°	45°	60°
⅜"	4½	9	6	12	2210	1540	1310	1090	840	2630	1830	1565	1290	990
½"	4½	9	6	12	3020	2460	2010	1625	1225	3590	2930	2390	1935	1455
⅝"	4½	9	6	12	3020	2640	2105	1690	1260	3590	3140	2505	2010	1500

1 - INSERT TABULATED DESIGN CAPACITY IS BASED ON REQUIRED SPACING. HOWEVER, INSERTS MAY BE INSTALLED AT A MINIMUM REDUCED SPACING OF FOUR TIMES DIAMETER OF ANCHOR (4*da) PROVIDED THE COMBINED DEMAND OF MULTIPLE INSERTS DOES NOT EXCEED THE CAPACITY OF ONE SINGLE INSERT.
2 - INSERT TABULATED DESIGN CAPACITY IS BASED ON REQUIRED EDGE DISTANCE FOR ALL EDGES. IF THE SHEAR CAPACITY IS REDUCED BY 40%, EDGE DISTANCE MAY BE REDUCED TO 4½ INCHES.
3 - CONNECTION OF THREADED ROD AND NUT TO MW-PAL-A-CS INSERT SHALL NOT BE TORQUED, SNUG TIGHT ONLY.
4 - DESIGN CAPACITY IS BASED ON THE SMALLER OF THE CONCRETE INSERT AND THE THREADED ROD STRENGTH.
5 - THE 6° ALLOWABLE INSTALLED ANGLE IS PERMITTED FOR ALL INSTALLATIONS.
6 - THIS INSERT MAY BE USED WITH ANY OTHER OSHPD OPA APPROVED SYSTEM PROVIDED THE RESULTANT LOADING OF THE JOB-SPECIFIC APPLICATION DOES NOT EXCEED THE VALUES STATED ABOVE.
7 - OVERSTRENGTH FACTOR MUST BE USED WHEN USING $Va_{(ASD)}$, $Na_{(ASD)}$ and $Fp_{(ASD)}$ VALUES FROM TABLE. WHERE OVERSTRENGTH FACTOR IS NOT USED, DIVIDE $Va_{(ASD)}$, $Na_{(ASD)}$ and $Fp_{(ASD)}$ VALUES FROM TABLE BY 1.2.

MASON WEST, INC.
1601 E. Miraloma Ave. Placentia, CA 92870
TEL (714) 630 - 0701, www.masonwest.com

Jiefu "Jeff" Zhang, SE
California SE No. S5270

PAGE
X5.2.1

MW-CDI CONCRETE INSERT

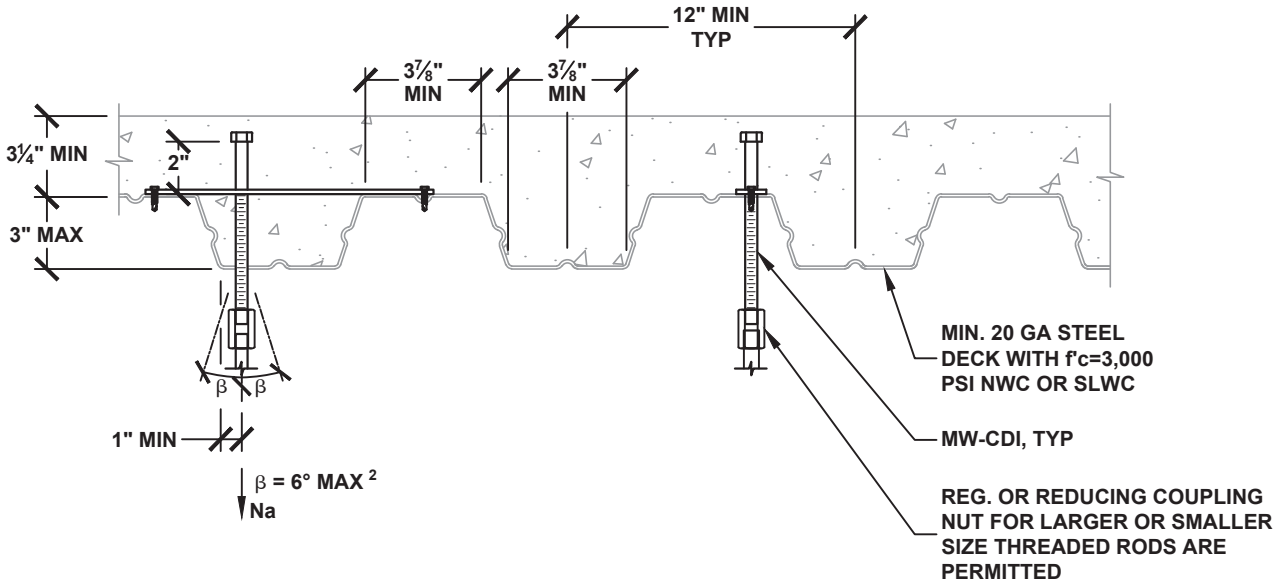

MW-CDI STRENGTH DESIGN (SD) AND ALLOWABLE STRESS DESIGN (ASD) VALUES FOR CONCRETE FILLED METAL DECKS [1,2,3,4,5,6]

TYPE (SEE PAGE X5.0.1 FOR MORE INFO.)	INSERT DIA. (IN)	INSERT REQ'D SPACING (IN)	MIN. REQ'D INSERT END DIST. (IN)	TENSION CAPACITY (SEISMIC)	
				STRENGTH DESIGN (SD) $Na_{(SD)}$ (LBS)	ALLOWABLE STRESS DESIGN (ASD) $Na_{(ASD)}$ (LBS)
MW-CDI-38	⅜"	6¾"	4½"	1660	1160
MW-CDI-50	½"				
MW-CDI-63	⅝"				
MW-CDI-75	¾"				

1 - INSERT DESIGN LOADS ARE BASED ON REQUIRED ANCHOR SPACING. HOWEVER, INSERTS MAY BE INSTALLED AT 4 TIMES ANCHOR BOLT DIAMETER MINIMUM SPACING PROVIDED THE COMBINED DEMAND OF MULTIPLE INSERTS DOES NOT EXCEED THE CAPACITY OF ONE SINGLE INSERT.
2 - THE 6° ALLOWABLE INSTALLED ANGLE IS PERMITTED FOR ALL INSTALLATIONS.
3 - DESIGN CAPACITY IS BASED ON THE SMALLER OF THE CONCRETE INSERT AND THE THREADED ROD STRENGTH.
4 - INSERT CAN BE INSTALLED ANYWHERE ON THE DECK.
5 - CONNECTION OF THREADED RODS, REGULAR NUTS AND COUPLING NUTS TO MW-CDI INSERTS ARE NOT REQUIRED TO BE TORQUED, SNUG TIGHT ONLY.
6 - HEADED BOLT GEOMETRY CONFORMS TO ANSI/ASME B18.2.1

REVIEWED FOR CODE COMPLIANCE OSHPD OPM-0043-13 Reviewed by: Jeffrey K. Kikumoto DATE: 06/23/2016 OFFICE OF STATEWIDE HEALTH PLANNING & DEVELOPMENT 2018

MASON WEST, INC.
1601 E. Miraloma Ave. Placentia, CA 92870
TEL (714) 630 - 0701, www.masonwest.com

Jiefu "Jeff" Zhang, SE
California SE No. S5270

PAGE
X5.4

THIS PAGE INTENTIONALLY LEFT BLANK.

MASON WEST, INC.
1601 E. Miraloma Ave. Placentia, CA 92870
TEL (714) 630 - 0701, www.masonwest.com

Jiefu "Jeff" Zhang, SE
California SE No. S5270

PAGE
X5.5

MW-CDI-B CONCRETE INSERT

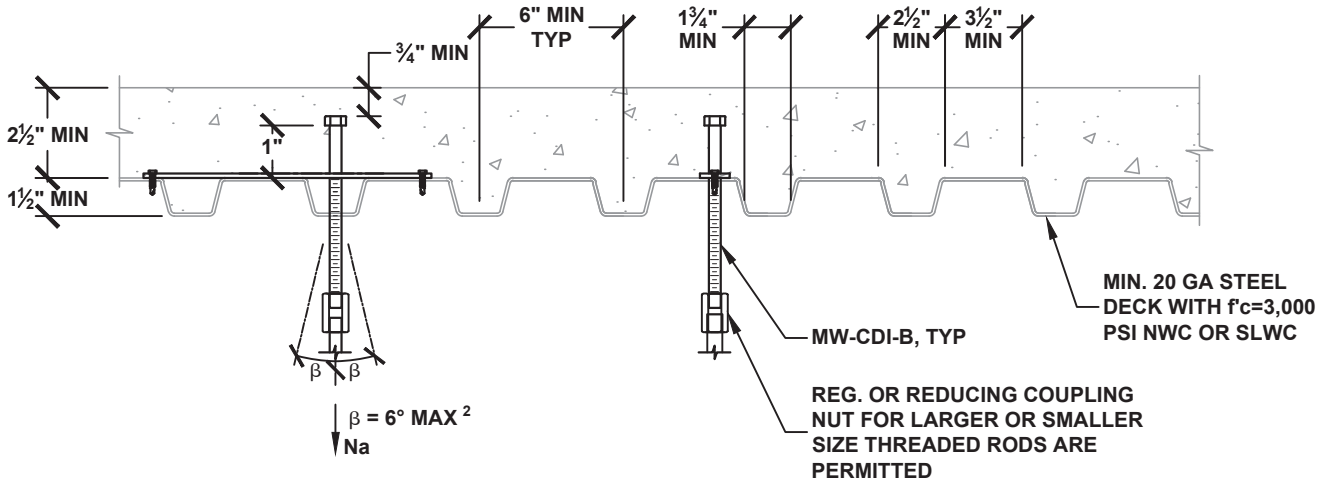

MW-CDI-B STRENGTH DESIGN (SD) AND ALLOWABLE STRESS DESIGN (ASD) VALUES FOR CONCRETE FILLED METAL DECKS [1,2,3,4,5,6]

TYPE (SEE PAGE X5.0.2 FOR MORE INFO.)	INSERT DIA. (IN)	INSERT REQ'D SPACING (IN)	MIN. REQ'D INSERT END DIST. (IN)	TENSION CAPACITY (SEISMIC)	
				STRENGTH DESIGN (SD) $Na_{(SD)}$ (LBS)	ALLOWABLE STRESS DESIGN (ASD) $Na_{(ASD)}$ (LBS)
MW-CDI-B-38	⅜"	6¾"	4½"	590	410
MW-CDI-B-50	½"				
MW-CDI-B-63	⅝"				
MW-CDI-B-75	¾"				

1 - INSERT DESIGN LOADS ARE BASED ON REQUIRED ANCHOR SPACING. HOWEVER, INSERTS MAY BE INSTALLED AT 4 TIMES ANCHOR BOLT DIAMETER MINIMUM SPACING PROVIDED THE COMBINED DEMAND OF MULTIPLE INSERTS DOES NOT EXCEED THE CAPACITY OF ONE SINGLE INSERT.
2 - THE 6° ALLOWABLE INSTALLED ANGLE IS PERMITTED FOR ALL INSTALLATIONS.
3 - DESIGN CAPACITY IS BASED ON THE SMALLER OF THE CONCRETE INSERT AND THE THREADED ROD STRENGTH.
4 - INSERT CAN BE INSTALLED ANYWHERE ON THE DECK.
5 - CONNECTION OF THREADED RODS, REGULAR NUTS AND COUPLING NUTS TO MW-CDI-B INSERTS ARE NOT REQUIRED TO BE TORQUED, SNUG TIGHT ONLY.
6 - HEADED BOLT GEOMETRY CONFORMS TO ANSI/ASME B18.2.1

OSHPD OPM-0043-13 DATE: 06/23/2016 REVIEWED FOR CODE COMPLIANCE Jeffrey Kikumoto 2016

MASON WEST, INC.
1601 E. Miraloma Ave. Placentia, CA 92870
TEL (714) 630 - 0701, www.masonwest.com

Jiefu "Jeff" Zhang, SE
California SE No. S5270

PAGE
X5.6

MW - SAP - SEISMIC ANCHOR PLATE

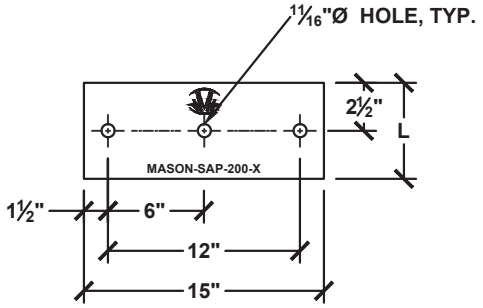

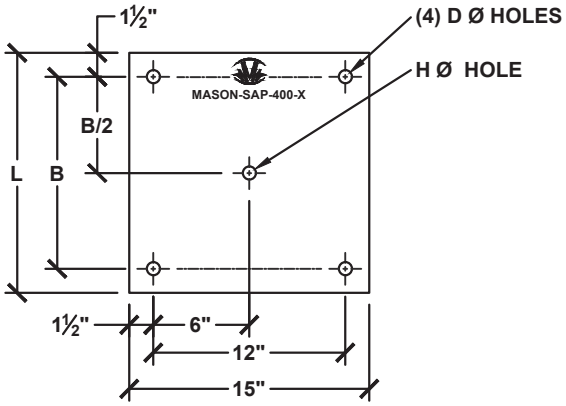

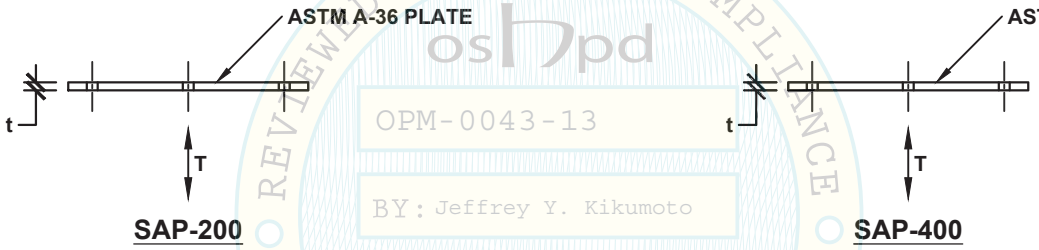

REVIEWED FOR CODE COMPLIANCE
CALIFORNIA BUILDING CODE, 2013
oshpd
OPM-0043-13
BY: Jeffrey Y. Kikumoto
DATE: 06/23/2016

DIMENSION (IN) AND RATINGS (LBS) (ASD)

MODEL	TENSION, T	t	L	B	D	H
SAP 200-A	1080	3/8	5	N/A	N/A	N/A
SAP 200-B	1930	½	5			
SAP 400-A	2280	3/8	10	7	15/16	1 1/16
SAP 400-B	3600	3/8	15	12	1 1/16	1 1/16
SAP 400-C	3500	3/8	15	12	1 1/16	1 3/16
SAP 400-D	3500	3/8	15	12	1 1/16	1 1/16

MASON WEST, INC.
1601 E. Miraloma Ave. Placentia, CA 92870
TEL (714) 630 - 0701, www.masonwest.com

Jiefu "Jeff" Zhang, SE
California SE No. S5270

PAGE
X6.0

MW-WBB - WELDED BEAM BRACKET

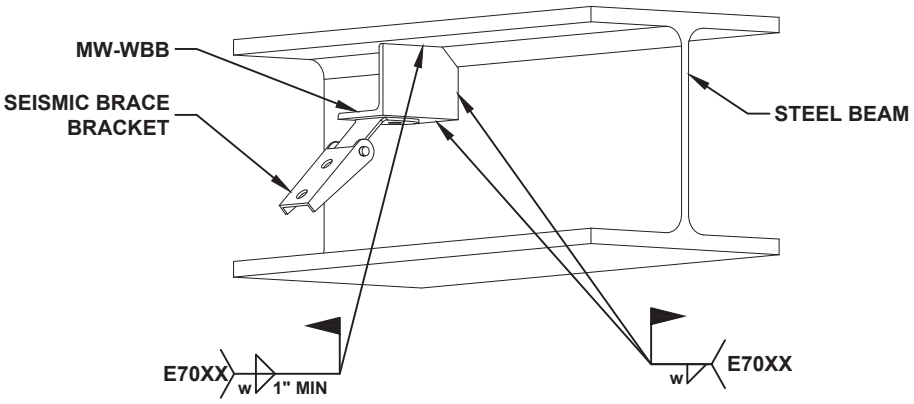

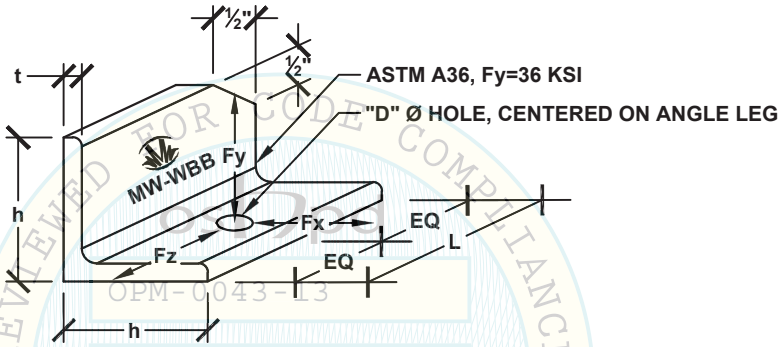

REVIEWED FOR CODE COMPLIANCE
CALIFORNIA BUILDING CODE, CBC 2013
OPM-0043-13
BY: Jeffrey Y. Kikumoto
DATE: 06/23/2016

MW-WBB RATINGS (ASD)

TYPE	h	t	L	w	"D"	VERTICAL	LATERAL	
						Fy	Fx	Fy
MW-WBB-38 MW-WBB-50 MW-WBB-63	4"	½"	4"	¼"	7/16" 9/16" 11/16"	2150 LBS	2150 LBS	2150 LBS
MW-WBB-75 MW-WBB-88 MW-WBB-100 MW-WBB-125	5"	¾"	6"	⅜"	13/16" 15/16" 1 1/16" 1 5/16"	3800 LBS	3800 LBS	3800 LBS

NOTE:
LOADING CAN BE APPLIED SIMULTANEOUSLY IN ALL THREE DIRECTIONS PROVIDED THE APPLIED LOADS ARE LESS THAN TABULATED LOADS SHOWN ON ABOVE TABLE.

MASON WEST, INC.
1601 E. Miraloma Ave. Placentia, CA 92870
TEL (714) 630 - 0701, www.masonwest.com

Jiefu "Jeff" Zhang, SE
California SE No. S5270

PAGE
X6.1

STRUT CHANNEL

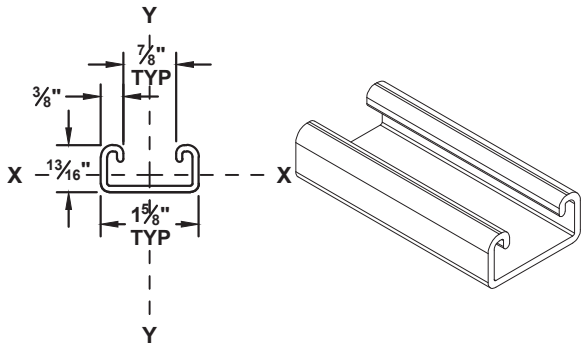

13/16 x 1 5/8 x 12ga
SINGLE STRUT

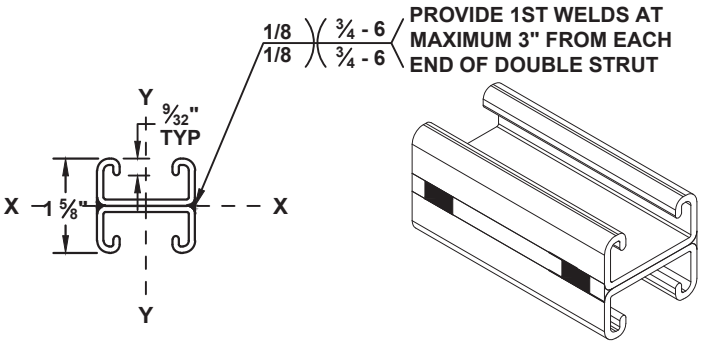

13/16 x 1 5/8 x 12ga
DOUBLE STRUT

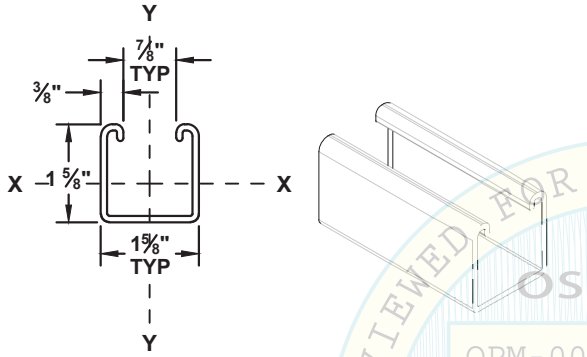

1 5/8 x 1 5/8 x 12ga
SINGLE STRUT

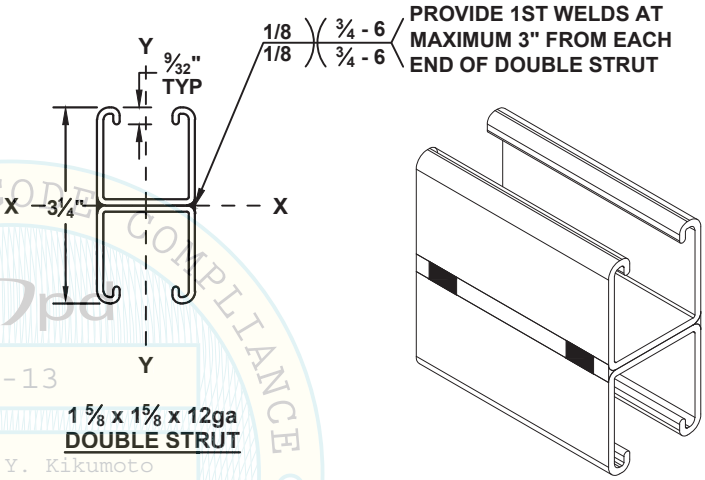

1 5/8 x 1 5/8 x 12ga
DOUBLE STRUT

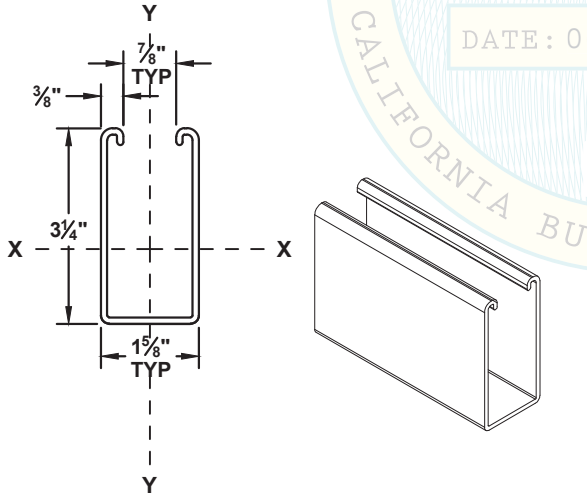

1 5/8 x 3 1/4 x 12ga
SINGLE STRUT

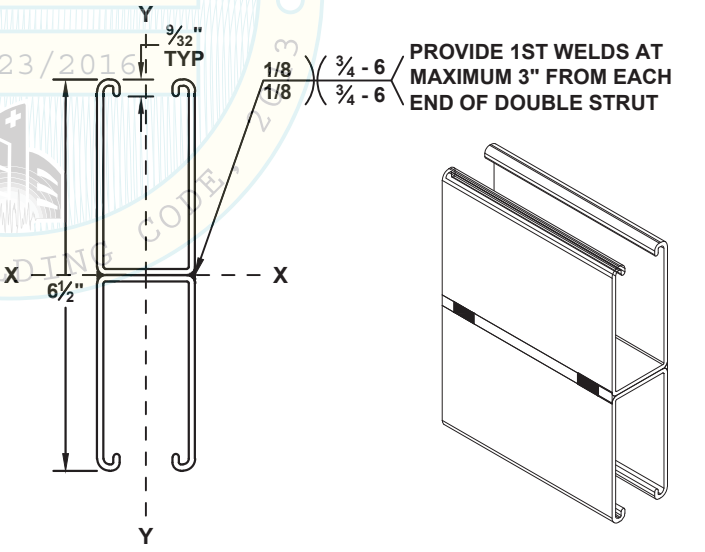

1 5/8 x 3 1/4 x 12ga
DOUBLE STRUT

NOTE: REFER TO X7.1 FOR MATERIAL GRADE AND MINIMUM SECTION PROPERTIES

REVIEWED FOR CODE COMPLIANCE
CALIFORNIA BUILDING CODE 2013
OSHPD
OPM-0043-13
BY: Jeffrey Y. Kikumoto
DATE: 06/23/2016

MASON WEST, INC.
1601 E. Miraloma Ave. Placentia, CA 92870
TEL (714) 630 - 0701, www.masonwest.com

Jiefu "Jeff" Zhang, SE
California SE No. S5270

PAGE
X7.0

STRUT CHANNEL SECTION PROPERTIES

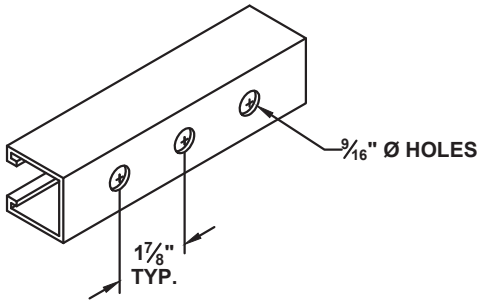

W/ PUNCHED HOLES

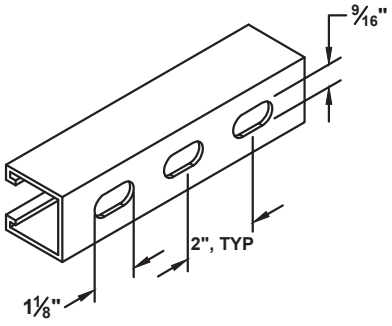

W/ SLOTTED HOLES

REVIEWED FOR CODE COMPLIANCE
oshpd
REVIEWED BY: Jeffrey Y. Kikumoto
DATE: 06/23/2016
CALIFORNIA BUILDING CODE, 2013

MINIMUM STRUT CHANNEL SECTION PROPERTIES

STRUT MEMBER	WEIGHT (LBS/FT)	AREA (IN^2)	I_{xx} (IN^4)	S_{xx} (IN^3)	r_x (IN)	I_{yy} (IN^4)	S_{yy} (IN^3)	r_y (IN)
13/16"x1 5/8"x12GA SINGLE STRUT	1.37	0.374	0.030	0.062	0.283	0.135	0.166	0.600
13/16"x1 5/8"x12GA DOUBLE STRUT	2.70	0.748	0.140	0.184	0.432	0.270	0.332	0.600
1 5/8"x1 5/8"x12GA SINGLE STRUT	1.89	0.544	0.180	0.195	0.575	0.233	0.287	0.655
1 5/8"x1 5/8"x12GA DOUBLE STRUT	3.78	1.088	0.896	0.570	0.908	0.466	0.574	0.655
1 5/8"x3 1/4x12GA SINGLE STRUT	3.05	0.844	1.073	0.609	1.102	0.429	0.529	0.696
1 5/8"x3 1/4"x12GA DOUBLE STRUT	6.10	1.768	6.064	1.896	1.852	0.859	1.057	0.696

NOTES

1. **STRUT MATERIAL TO BE MANUFACTURED OF COLD ROLLED MILD STEEL MEETING ASTM-A1011SS GRADE 33.**
2. **13/16" STRUT MAY BE SUBSTITUTED WITH 7/8" STRUT OF SAME 1 5/8" HEIGHT AND 12 ga THICKNESS MATERIAL.**
3. **RATED LOADS AT BOLTED CONNECTIONS SHOWN IN OPM-0043 ARE NOT VALID AT SLOTTED HOLES IN STRUT CHANNEL. ALL BOLT HOLES SHALL BE STANDARD HOLES (BOLT DIA. + 1/16")**

MASON WEST, INC.
1601 E. Miraloma Ave. Placentia, CA 92870
TEL (714) 630 - 0701, www.masonwest.com

Jiefu "Jeff" Zhang, SE
California SE No. S5270

PAGE
X7.1

MASON WEST MW-SSC AND MW-SSCE

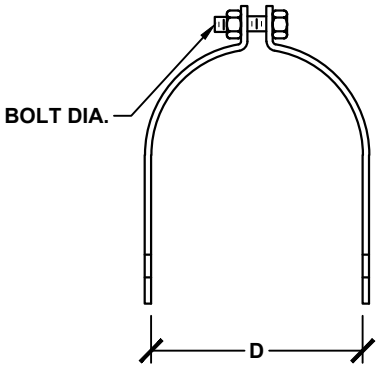

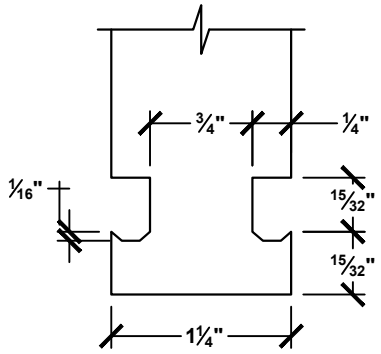

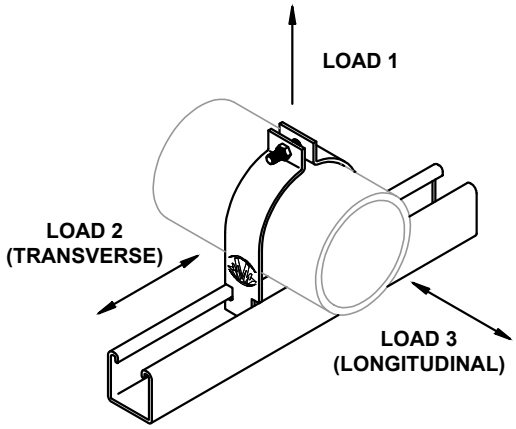

MATERIAL:

CLAMP: HOT ROLLED MILD STEEL ASTM A1011SS GR 33
BOLT: ASTM A307, GRADE A

PARTIAL DETAIL OF MASON WEST MW-SSC, MW-SSCE

STEEL PIPE/RIGID STEEL CONDUIT						DESIGN LOADS (ASD)		
PART #	NOM. PIPE SIZE (IN)	D (IN)	STRAP GA.	BOLT (IN)	BOLT TORQUE (FT-LB)	MAX LOAD 1 (LBS)	MAX LOAD 2 (LBS)	MAX LOAD 3 (LBS)
SSC-05	½	.84	16	¼	6	900	80	60
SSC-08	¾	1.05	14	¼	6	1090	80	170
SSC-10	1	1.315	14	¼	6	1280	70	70
SSC-13	1¼	1.66	14	¼	6	1470	80	160
SSC-15	1½	1.9	12	5/16	11	1660	90	130
SSC-20	2	2.375	12	5/16	11	2050	130	290
SSC-25	2½	2.875	12	5/16	11	2430	170	330
SSC-30	3	3.5	12	5/16	11	2820	200	360
SSC-40	4	4.5	11	⅜	20	3280	260	290
SSC-50	5	5.563	11	⅜	20	3740	370	470
SSC-60	6	6.625	10	⅜	20	2840	350	450
SSC-80	8	8.625	10	⅜	20	2840	320	310
SSC-100	10	10.75	10	⅜	20	2840	320	310
SSC-120	12	12.75	10	⅜	20	2840	270	190

EMT/IMC CONDUIT						DESIGN LOADS (ASD)		
PART #	NOM. PIPE SIZE (IN)	D (IN)	STRAP GA.	BOLT (IN)	BOLT TORQUE (FT-LB)	MAX LOAD 1 (LBS)	MAX LOAD 2 (LBS)	MAX LOAD 3 (LBS)
SSCE-05	½	.706	16	¼	6	1110	120	140
SSCE-08	¾	.922	14	¼	6	1400	120	150
SSCE-10	1	1.163	14	¼	6	1700	120	180
SSCE-13	1¼	1.51	14	¼	6	2000	120	200
SSCE-15	1½	1.74	12	5/16	11	2240	130	250
SSCE-20	2	2.197	12	5/16	11	2730	150	290
SSC-25	2½	2.875	12	5/16	11	2880	160	320
SSC-30	3	3.5	12	5/16	11	3020	160	320
SSC-40	4	4.5	11	⅜	20	3150	260	290

1 - STEEL PIPE SHALL BE MINIMUM SCHEDULE 10. RIGID STEEL CONDUIT SHALL BE MANUFACTURED TO UL6 AND ANSI C80.3.
2 - FOR PIPING/CONDUIT SUSPENDED FROM STRUT, REFER TO PAGE X8.0.1 FOR COMBINED MAX VERTICAL AND LATERAL LOADS.
3 - LOAD 2 AND LOAD 3 MAY BE ROTATED UP TO 15° MAX FROM THE REFERENCED LOAD DIRECTION IN PLAN.

REVIEWED FOR CODE COMPLIANCE
OSHPD
OPM-0043-13
BY: Jeffrey Y. Kikumoto
DATE: 06/21/2016
CALIFORNIA BUILDING CODE 2013

MASON WEST, INC.
1601 E. Miraloma Ave. Placentia, CA 92870
TEL (714) 630 - 0701, www.masonwest.com

Jiefu "Jeff" Zhang, SE
California SE No. S5270

PAGE
X8.0

MASON WEST MW-SSC AND MW-SSCE

MAXIMUM ALLOWABLE LOADS FOR MASON WEST MW-SSC PIPE CLAMPS FOR SCH. 40 STEEL PIPING AND RIGID CONDUIT [5]

PART #	NOM. PIPE SIZE (INCH)	MAX SUPPORT SPACING (FT)	DESIGN LOADS (ASD) [1, 2, 4]					
			COMBINED MAX VERTICAL AND LATERAL LOAD [3]		COMBINED MAX VERTICAL AND LATERAL LOAD [3]		COMBINED MAX VERTICAL AND LATERAL LOAD FOR ALL-DIRECTIONAL BRACING	
			LOAD 1 (LBS)	LOAD 2 Fp (LBS)	LOAD 1 (LBS)	LOAD 3 Fp (LBS)	LOAD 1 (LBS)	LOAD 2 or LOAD 3 Fp (LBS)
SSC-05	½	7	20	80	20	60	20	40
SSC-08	¾	7	20	70	20	160	20	60
SSC-10	1	7	30	60	30	70	30	40
SSC-13	1 ¼	7	40	70	40	160	40	60
SSC-15	1 ½	9	50	80	50	130	50	60
SSC-20	2	10	70	130	70	280	70	110
SSC-25	2 ½	10	110	160	110	310	110	130
SSC-30	3	10	150	190	150	330	150	150
SSC-40	4	10	220	250	220	260	220	160
SSC-50	5	10	320	330	320	430	320	240
SSC-60	6	10	430	300	430	370	430	210
SSC-80	8	10	760	240	760	230	760	150

MAXIMUM ALLOWABLE LOADS FOR MASON WEST MW-SSCE AND MW-SSC PIPE CLAMPS FOR EMT/IMC CONDUIT

PART #	NOM. PIPE SIZE (INCH)	MAX SUPPORT SPACING (FT)	DESIGN LOADS (ASD) [1, 2, 4]					
			COMBINED MAX VERTICAL AND LATERAL LOAD [3]		COMBINED MAX VERTICAL AND LATERAL LOAD [3]		COMBINED MAX VERTICAL AND LATERAL LOAD FOR ALL-DIRECTIONAL BRACING	
			LOAD 1 (LBS)	LOAD 2 Fp (LBS)	LOAD 1 (LBS)	LOAD 3 Fp (LBS)	LOAD 1 (LBS)	LOAD 2 or LOAD 3 Fp (LBS)
SSCE-05	½	10	10	110	10	130	10	80
SSCE-08	¾	10	10	110	10	150	10	80
SSCE-10	1	10	20	110	20	170	20	90
SSCE-13	1 ¼	10	30	120	30	190	30	90
SSCE-15	1 ½	10	30	130	30	250	30	110
SSCE-20	2	10	50	150	50	280	50	130
SSC-25	2 ½	10	70	150	70	310	70	130
SSC-30	3	10	90	160	90	310	90	130
SSC-40	4	10	150	240	150	270	150	160

REVIEWED FOR CODE COMPLIANCE
OPM-0043-13
Reviewed by: Jeffrey Kikumoto
DATE: 06/21/2016
CALIFORNIA BUILDING CODE, 2013

1 - REFER TO PAGE X8.0 FOR LOAD DIRECTION, IDENTIFICATION, AND BALANCE OF INFORMATION.
2 - THE COMBINED MAX VERTICAL AND LATERAL LOADS SHOWN ABOVE ARE APPLICABLE FOR PIPING/CONDUIT SUSPENDED FROM STRUT, WHERE PIPE CLAMPS RESIST PULLOUT.
3 - THE LATERAL LOADS (Fp) SHOWN ABOVE CONSIDER LOADING AT 15 DEGREES MAX FROM THE REFERENCED LOAD DIRECTION.
4- THE COMBINED MAX VERTICAL AND LATERAL LOADS MAY BE ADJUSTED FOR SPECIFIC GRAVITY SUPPORT SPACING IF THE FOLLOWING IS SATISFIED. REFER TO PAGE X8.0 FOR MAX LOAD 1, 2, AND 3.

$$T/(\text{MAX LOAD 1}) + L_T/(\text{MAX LOAD 2}) + L_L/(\text{MAX LOAD 3}) \le 1.0$$

T = GRAVITY LOAD + VERTICAL SEISMIC LOAD.
L_T = MAX TRANSVERSE LATERAL LOAD.
L_L = MAX LONGITUDINAL LATERAL LOAD.

5 - FOR SCH. 10 AND SCH. 80 STEEL PIPE, THE REGISTERED DESIGN PROFESSIONAL (RDP) SHALL CALCULATE THE COMBINED CLAMP CAPACITIES USING THE FORMULAS IN FOOTNOTE 4.

MASON WEST, INC.
1601 E. Miraloma Ave. Placentia, CA 92870
TEL (714) 630 - 0701, www.masonwest.com

Jiefu "Jeff" Zhang, SE
California SE No. S5270

PAGE
X8.0.1

MASON WEST MW-SCC

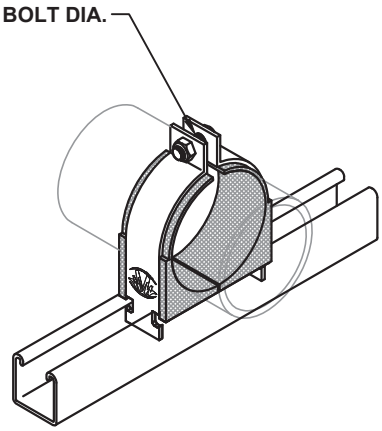

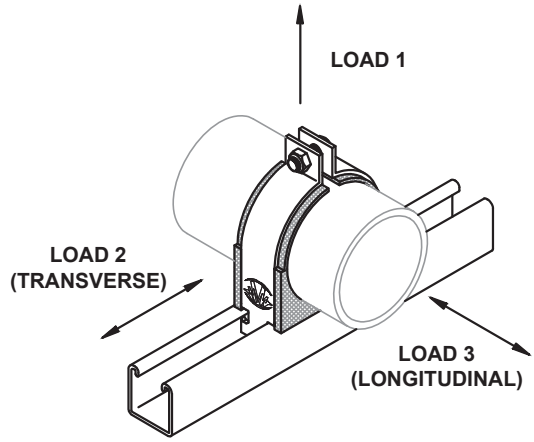

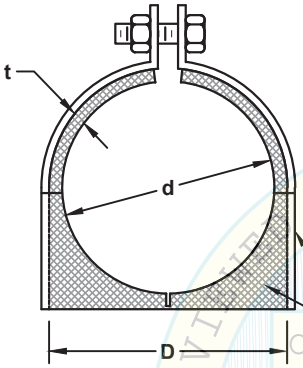

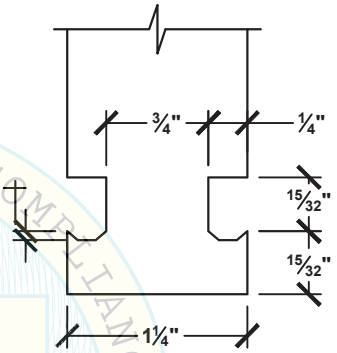

PARTIAL DETAIL OF MASON WEST MW-SCC

MATERIAL:

CLAMP: HOT ROLLED MILD STEEL, ASTM A1011SS GR 33
CUSHION: THERMOPLASTIC ELASTOMER ASTM D4474TES0130 A90000
BOLT: ASTM A307, GRADE A

COPPER PIPE (TYPE K OR L)								DESIGN LOADS (ASD)		
PART #	NOM. PIPE SIZE (IN)	d (IN)	D (IN)	t (IN)	STRAP GA.	BOLT (IN)	BOLT TORQUE (FT-LB)	MAX LOAD 1 (LBS)	MAX LOAD 2 (LBS)	MAX LOAD 3 (LBS)
SCC-04	3/8	.5	.675	.1075	14	1/4	6	850	60	60
SCC-05	1/2	.625	.84	.1075	14	1/4	6	850	60	70
SCC-08	3/4	.875	1.05	.0875	14	1/4	6	850	60	80
SCC-10	1	1.125	1.315	.095	12	1/4	6	2460	60	80
SCC-13	1 1/4	1.375	1.66	.1425	12	5/16	11	2380	80	180
SCC-15	1 1/2	1.625	1.9	.1375	12	5/16	11	2290	100	140
SCC-20	2	2.125	2.375	.125	11	5/16	11	2570	80	120
SCC-25	2 1/2	2.625	2.875	.125	11	5/16	11	2850	80	160
SCC-30	3	3.125	3.5	.1875	11	5/16	11	3130	80	190
SCC-40	4	4.125	4.5	.1875	11	3/8	20	3210	150	190
SCC-50	5	5.125	5.625	.1875	11	3/8	20	3290	180	190
SCC-60	6	6.125	6.625	.1875	11	3/8	20	3370	200	160

1 - FOR PIPING SUSPENDED FROM STRUT, REFER TO PAGE X8.1.1 FOR COMBINED MAX VERTICAL AND LATERAL LOADS.
2 - LOAD 2 AND LOAD 3 MAY BE ROTATED UP TO 15° MAX FROM THE REFERENCED LOAD DIRECTION IN PLAN.

REVIEWED FOR CODE COMPLIANCE
OPM-0043-13
BY: Jeffrey Y. Kikumoto
DATE: 06/23/2016
CALIFORNIA BUILDING CODE 2013

MASON WEST, INC.
1601 E. Miraloma Ave. Placentia, CA 92870
TEL (714) 630 - 0701, www.masonwest.com

Jiefu "Jeff" Zhang, SE
California SE No. S5270

PAGE
X8.1

MAXIMUM ALLOWABLE LOADS FOR MASON WEST MW-SCC PIPE CLAMPS FOR WATER FILLED COPPER PIPING [5]								
			DESIGN LOADS (ASD) [1, 2, 4]					
			COMBINED MAX VERTICAL AND LATERAL LOAD [3]		COMBINED MAX VERTICAL AND LATERAL LOAD [3]		COMBINED MAX VERTICAL AND LATERAL LOAD FOR ALL-DIRECTIONAL BRACING	
PART #	NOM. PIPE SIZE (INCH)	MAX SUPPORT SPACING (FT)	LOAD 1 (LBS)	LOAD 2 Fp (LBS)	LOAD 1 (LBS)	LOAD 3 Fp (LBS)	LOAD 1 (LBS)	LOAD 2 or LOAD 3 Fp (LBS)
SCC-04	3/8	5	10	60	10	60	10	40
SCC-05	1/2	5	10	60	10	70	10	40
SCC-08	3/4	5	10	60	10	80	10	40
SCC-10	1	6	20	60	20	80	20	40
SCC-13	1 1/4	7	30	80	30	180	30	80
SCC-15	1 1/2	8	40	100	40	130	40	80
SCC-20	2	8	50	80	50	110	50	60
SCC-25	2 1/2	9	80	80	80	120	80	60
SCC-30	3	10	110	80	110	160	110	70
SCC-40	4	10	180	140	180	180	180	100
SCC-50	5	10	260	160	260	170	260	110
SCC-60	6	10	350	180	350	140	350	100

1 - REFER TO PAGE X8.1 FOR LOAD DIRECTION, IDENTIFICATION, AND BALANCE OF INFORMATION.
2 - THE COMBINED MAX VERTICAL AND LATERAL LOADS SHOWN ABOVE ARE APPLICABLE FOR PIPING/CONDUIT SUSPENDED FROM STRUT, WHERE PIPE CLAMPS RESIST PULLOUT.
3 - THE LATERAL LOADS (Fp) SHOWN ABOVE CONSIDER LOADING AT 15 DEGREES MAX FROM THE REFERENCED LOAD DIRECTION.
4- THE COMBINED MAX VERTICAL AND LATERAL LOADS MAY BE ADJUSTED FOR SPECIFIC GRAVITY SUPPORT SPACING IF THE FOLLOWING IS SATISFIED. REFER TO PAGE X8.1 FOR MAX LOAD 1, 2, AND 3.

$T/(\text{MAX LOAD 1}) + L_T/(\text{MAX LOAD 2}) + L_L/(\text{MAX LOAD 3}) \leq 1.0$

T = GRAVITY LOAD + VERTICAL SEISMIC LOAD.
L_T = MAX TRANSVERSE LATERAL LOAD.
L_L = MAX LONGITUDINAL LATERAL LOAD.

5 - FOR VAPOR FILLED COPPER PIPE, THE REGISTERED DESIGN PROFESSIONAL (RDP) SHALL CALCULATE THE COMBINED CLAMP CAPACITIES USING THE FORMULAS IN FOOTNOTE 4.

APPROVED FOR CODE COMPLIANCE
Jeffrey Y. Kikumoto
DATE: 06/23/2016
2013 CALIFORNIA BUILDING CODE

MASON WEST, INC.
1601 E. Miraloma Ave. Placentia, CA 92870
TEL (714) 630 - 0701, www.masonwest.com

Jiefu "Jeff" Zhang, SE
California SE No. S5270

MW-SSC, MW-SSCE & MW-SCC INSTALLATION

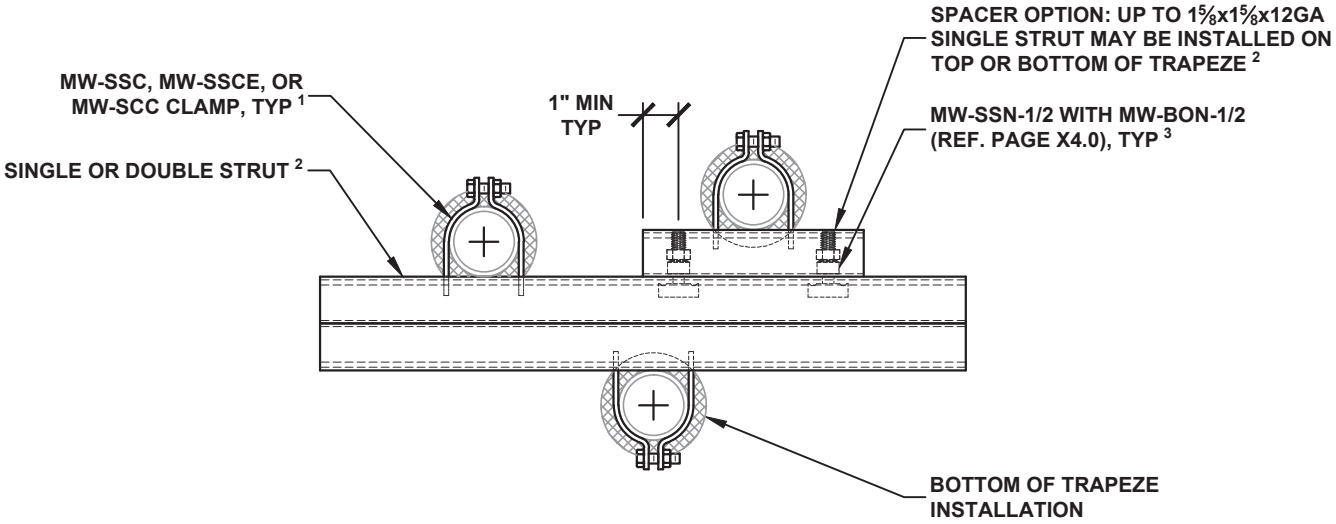

STRUT TRAPEZE INSTALLATION

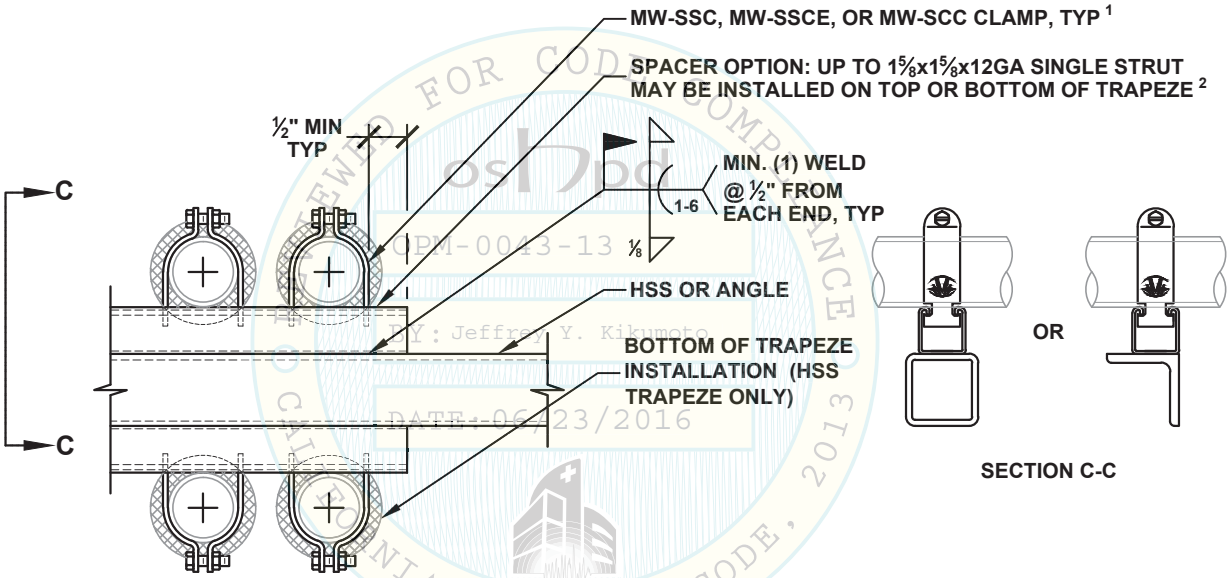

STEEL TRAPEZE INSTALLATION

REVIEWED FOR CODE COMPLIANCE
OSHPD
OPM-0043-13
BY: Jeffrey Y. Kikumoto
DATE: 06/23/2016
CALIFORNIA BUILDING CODE, 2013

1. MASON WEST MW-SSC, MW-SSCE, MW-SCC PIPE CLAMPS CAN BE USED WITH THE FOLLOWING STRUT MEMBERS (REF. PAGE X7.0 & X7.1 FOR STRUT MEMBER DATA) :
   - 1 - 13/16x1⅝x12GA SINGLE STRUT
   - 2 - 13/16x1⅝x12GA DOUBLE STRUT
   - 3 - 1⅝x1⅝x12GA SINGLE STRUT
   - 4 - 1⅝x1⅝x12GA DOUBLE STRUT
   - 5 - 1⅝x3¼x12GA SINGLE STRUT
2. STRUT MEMBERS MAY BE PROVIDED WITH PUNCHED OR SLOTTED HOLES. (REF. PAGE X7.1)
3. MASON WEST MW-SSN-1/2 STRUT NUTS WITH MW-BON-1/2 NUTS MAY BE REPLACED WITH ½" STRUT NUTS BOLTS IF TORQUED TO 50 FT-LBS.

MASON WEST, INC.
1601 E. Miraloma Ave. Placentia, CA 92870
TEL (714) 630 - 0701, www.masonwest.com

Jiefu "Jeff" Zhang, SE
California SE No. S5270

PAGE
X8.2

MASON WEST MW-SPC

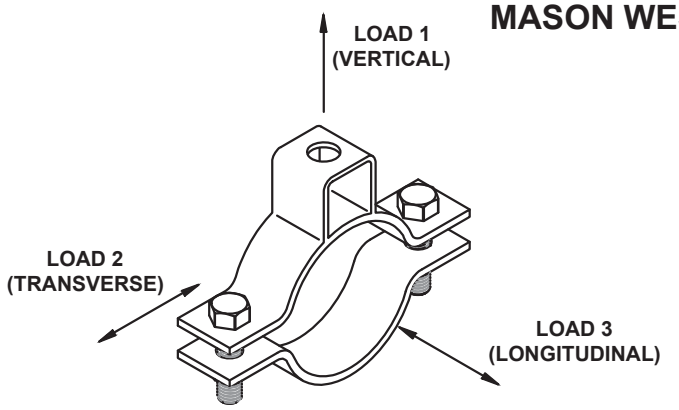

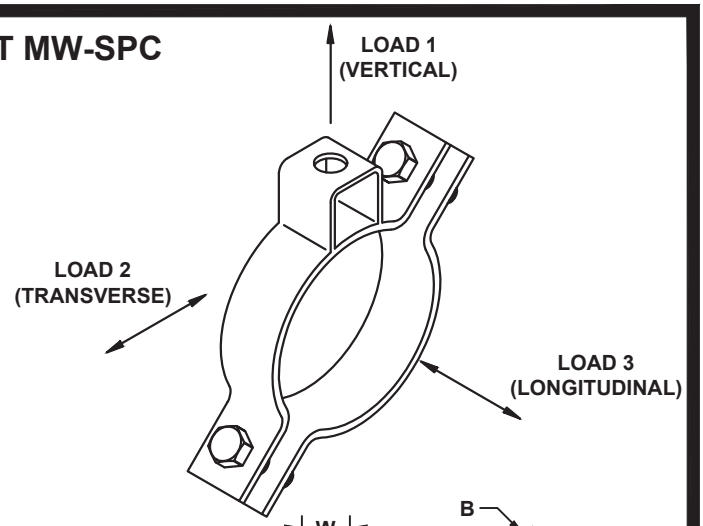

NOTE: EMBLEM STAMPED ON BOTTOM OF MW-SPC

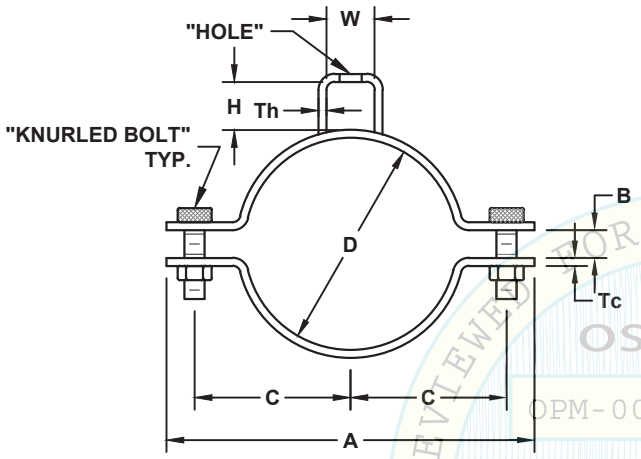

1 ¼"Ø TO 3"Ø

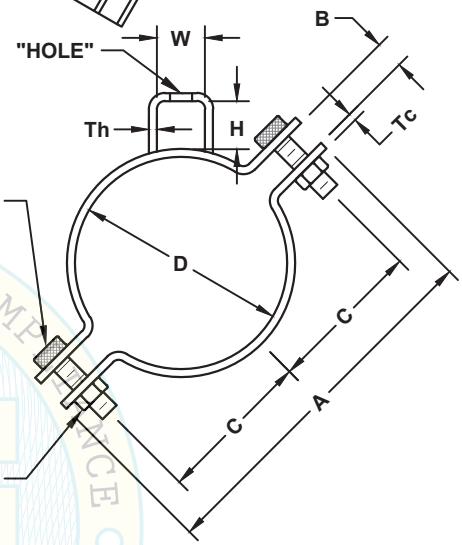

4"Ø TO 12"Ø

OSHPD
OPM-0043-13
BY: Jeffrey Y. Kikumoto
DATE: 06/23/2016
REVIEWED FOR CODE COMPLIANCE
CALIFORNIA BUILDING CODE 2013

MATERIAL:

CLAMP: AISI 1050 CARBON STEEL
BOLT: Q235 CARBON STEEL TESTED TO ASTM F606

PART #	NOM. PIPE SIZE (INCH)	A (INCH)	B (INCH)	C (INCH)	D (INCH)	Tc (INCH)	WIDTH (INCH)	BOLT DIA. (INCH)	MIN BOLT TORQUE (FT-LB)	H (INCH)	W (INCH)	Th (INCH)	HOLE DIA. (INCH)
SPC-13	1¼	4	½	1⅜	1.66	⅛	1	⅜	20	1¼	1¼	⅛	7/16
SPC-15	1½	4¼	½	1½	1.9	⅛	1	⅜	20	1¼	1¼	⅛	7/16
SPC-20	2	5¼	½	2	2.375	⅛	1	⅜	20	1¼	1¼	⅛	7/16
SPC-25	2½	6	⅝	2¼	2.875	3/16	1½	½	45	1¾	1⅞	3/16	9/16
SPC-30	3	7	⅝	2¾	3.5	3/16	1½	½	45	1¾	1⅞	3/16	9/16
SPC-40	4	8½	¾	3⅜	4.5	3/16	1½	½	45	1¾	1⅞	3/16	11/16
SPC-50	5	9⅜	¾	3 13/16	5.625	3/16	1½	½	45	1¾	1⅞	3/16	11/16
SPC-60	6	11½	⅞	4⅞	6.625	¼	2	⅝	75	2½	2½	⅜	13/16
SPC-80	8	13⅝	1	5 13/16	8.625	¼	2	⅝	75	2½	2½	⅜	13/16
SPC-100	10	16½	1	7¼	10.75	⅜	2½	¾	100	3¼	3¼	½	13/16
SPC-120	12	18½	1	8¼	12.75	⅜	2½	¾	100	3¼	3¼	½	13/16

NOTE: THIS CLAMP CAN BE USED FOR MINIMUM SCHEDULE 10 STEEL PIPE, NO-HUB CAST IRON PIPE AND RIGID STEEL CONDUIT. RIGID STEEL CONDUIT SHALL BE MANUFACTURED TO UL6 AND AISI C80.1

MASON WEST, INC.
1601 E. Miraloma Ave. Placentia, CA 92870
TEL (714) 630 - 0701, www.masonwest.com

Jiefu "Jeff" Zhang, SE
California SE No. S5270

PAGE
X8.3

MASON WEST MW-SPC

MAXIMUM ALLOWABLE LOADS FOR MASON WEST MW-SPC PIPE CLAMPS FOR STEEL PIPING AND RIGID CONDUIT

PART #	NOM. PIPE SIZE (INCH)	DESIGN LOADS (ASD)						
		MAX VERTICAL LOAD ONLY [1]	MAX LATERAL LOADS [1]		COMBINED MAX VERTICAL AND LATERAL LOAD [1, 2]		COMBINED MAX VERTICAL AND LATERAL LOAD [1, 2]	
		LOAD 1 (LBS)	LOAD 2 (LBS)	LOAD 3 (LBS)	LOAD 1 (LBS)	LOAD 2 (LBS)	LOAD 1 (LBS)	LOAD 3 (LBS)
SPC-13	1¼	1210	350	420	40	340	40	410
SPC-15	1½	1210	350	420	60	340	60	400
SPC-20	2	1210	350	170	90	330	90	150
SPC-25	2½	2460	500	850	140	470	140	810
SPC-30	3	2460	500	800	200	460	200	740
SPC-40	4	2460	380	730	360	330	360	630
SPC-50	5	2460	380	850	550	300	550	660
SPC-60	6	6730	740	1680	820	650	820	1470
SPC-80	8	6730	740	1470	1440	580	1440	1150
SPC-100	10	6730	450	1470	2210	300	2210	980
SPC-120	12	6730	450	1440	3000	250	3000	800

MAXIMUM ALLOWABLE LOADS FOR MASON WEST MW-SPC PIPE CLAMPS FOR CAST IRON PIPING

PART #	NOM. PIPE SIZE (INCH)	DESIGN LOADS (ASD)						
		MAX VERTICAL LOAD ONLY [1]	MAX LATERAL LOADS [1]		COMBINED MAX VERTICAL AND LATERAL LOAD [1, 2]		COMBINED MAX VERTICAL AND LATERAL LOAD [1, 2]	
		LOAD 1 (LBS)	LOAD 2 (LBS)	LOAD 3 (LBS)	LOAD 1 (LBS)	LOAD 2 (LBS)	LOAD 1 (LBS)	LOAD 3 (LBS)
SPC-20	2	1210	70	310	60	60	60	290
SPC-30	3	2460	230	1000	100	220	100	960
SPC-40	4	2460	300	830	150	280	150	780
SPC-50	5	2460	300	930	200	270	200	850
SPC-60	6	6730	790	1830	260	760	260	1760
SPC-80	8	6730	790	1750	450	730	450	1630
SPC-100	10	6730	420	1490	670	380	670	1340
SPC-120	12	6730	420	1460	910	370	910	1260

1 - REFER TO PAGE X8.3 FOR LOAD DIRECTION, IDENTIFICATION, AND BALANCE OF INFORMATION.

2 - THE MAX COMBINED VERTICAL AND LATERAL LOADS MAY BE ADJUSTED FOR SPECIFIC GRAVITY SUPPORT SPACING IF THE FOLLOWING IS SATISFIED:

$T/(\text{MAX LOAD 1}) + L_T/(\text{MAX LOAD 2}) \leq 1.0$

OR

$T/(\text{MAX LOAD 1}) + L_L/(\text{MAX LOAD 3}) \leq 1.0$

T = MAX VERTICAL LOAD, INCLUDING VERTICAL SEISMIC

L_T = MAX TRANSVERSE LATERAL LOAD ONLY

L_L = MAX LONGITUDINAL LATERAL LOAD ONLY

OSHPD REVIEWED FOR CODE COMPLIANCE CALIFORNIA BUILDING CODE 2013 OPM-0043-13 BY: Jeffrey Y. Kikumoto DATE: 06/23/2016

MASON WEST, INC.
1601 E. Miraloma Ave. Placentia, CA 92870
TEL (714) 630 - 0701, www.masonwest.com

Jiefu "Jeff" Zhang, SE
California SE No. S5270

MASON WEST MW-WPL
WELDED PIPE HANGER LUG

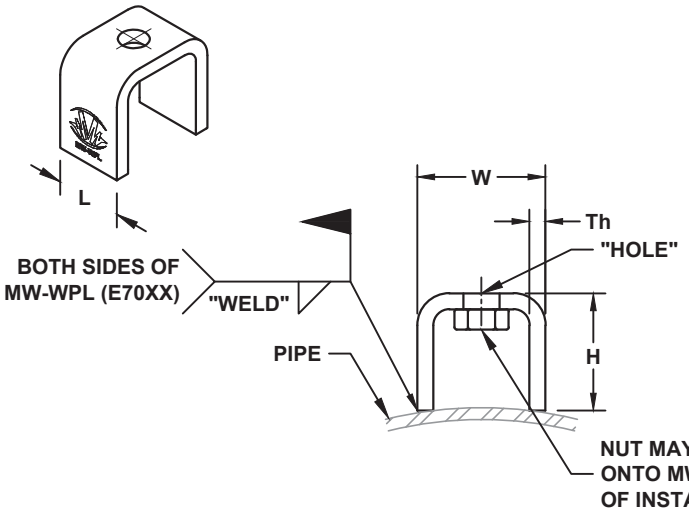

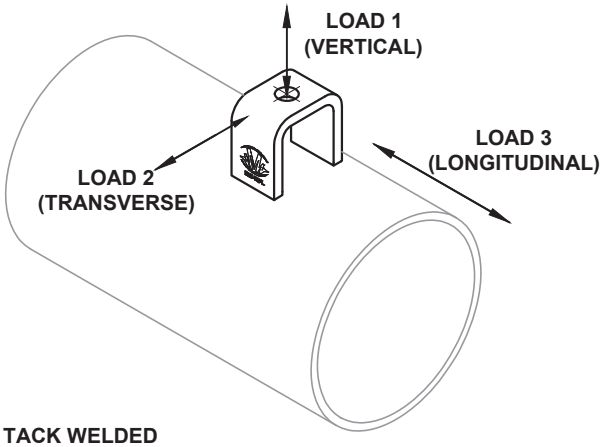

PART #	Pipe Size INCH	L INCH	H INCH	W INCH	Th INCH	HOLE SIZE INCH	WELD INCH	DESIGN LOADS (ASD)				
								MAXIMUM VERTICAL LOAD ONLY	COMBINED MAXIMUM VERTICAL AND LATERAL LOADS		COMBINED MAXIMUM VERTICAL AND LATERAL LOADS	
								LOAD 1 (LBS)	LOAD 1 (LBS)	LOAD 2 (LBS)	LOAD 1 (LBS)	LOAD 3 (LBS)
WPL-38	1 ¼ 1 ½ 2	2	1½	1½	⅛	7/16	⅛	720	540	175	720	450
WPL-50	2 ½ 3	2½	2	2	3/16	9/16	3/16	1320	780	350	1320	1050
WPL-63	4 5	3	2	2	¼	11/16	3/16	2880	1760	750	2400	1250
WPL-75	6 8	3½	3	3	⅜	13/16	¼	4800	3200	1250	3840	2500
WPL-75A	10 12 14 16 18	4	3	3½	⅝	13/16	5/16	8000	6000	2750	6000	4500
WPL-88	10 12	4	3	3	½	15/16	5/16	6900	6000	2500	6000	5000
WPL-100	14 16 18	5	4	4	⅝	1 1/16	5/16	8880	6900	3000	6900	7500
WPL-125	20 24	6	3	4	⅝	1 5/16	5/16	11400	10200	5750	10200	8000

1 - MW-WPL LUG IS MADE FROM ASTM A36 OR ASTM A500 GRADE B STEEL.
2 - PIPE/CONDUIT MATERIAL TO BE STANDARD SCHEDULE PIPE (MIN. SCH. 40S) MADE OF CARBON OR STAINLESS STEEL MATERIAL PER ASME B31.1 STANDARDS.
3 - THERE MUST BE A HANGER WITHIN 10'-0" ON EACH SIDE OF MW-WPL.
4 - WHEN USING MW-WPL WITH COMBINED VERTICAL AND LATERAL LOADS, EACH OF THE LOADS MUST BE BELOW WHAT IS SHOWN IN THE ABOVE TABLE.

REVIEWED FOR CODE COMPLIANCE
OSHPD
OPM-0043-13
BY: Jeffrey Y. Kikumoto
DATE: 06/23/2016
CALIFORNIA BUILDING CODE, 2013

MASON WEST, INC.
1601 E. Miraloma Ave. Placentia, CA 92870
TEL (714) 630 - 0701, www.masonwest.com

Jiefu "Jeff" Zhang, SE
California SE No. S5270

PAGE
X8.4

APPENDIX

MASON WEST, INC.
1601 E. Miraloma Ave. Placentia, CA 92870
TEL (714) 630 - 0701, www.masonwest.com

Jiefu "Jeff" Zhang, SE
California SE No. S5270

PAGE
APP0.0

DUCT WEIGHTS

GALVANIZED RECTANGULAR DUCT

24 GAGE - SIZES 3" x 3" TO 28" x 28"

(LBS/FT)

SIZE (IN)	3	4	5	6	7	8	9	10	12	14	16	18	20	22	24	26	28
3	1.3	1.5	1.7	2.0	2.2	2.4	2.6	2.8	3.3	3.7	4.1	4.6	5.0	5.4	5.9	6.3	6.7
4		1.7	2.0	2.2	2.4	2.6	2.8	3.0	3.5	3.9	4.3	4.8	5.2	5.6	6.1	6.5	6.9
5			2.2	2.4	2.6	2.8	3.0	3.3	3.7	4.1	4.6	5.0	5.4	5.9	6.3	6.7	7.2
6				2.6	2.8	3.0	3.3	3.5	3.9	4.3	4.8	5.2	5.6	6.1	6.5	6.9	7.4
7					3.0	3.3	3.5	3.7	4.1	4.6	5.0	5.4	5.9	6.3	6.7	7.2	7.6
8						3.5	3.7	3.9	4.3	4.8	5.2	5.6	6.1	6.5	6.9	7.4	7.8
9							3.9	4.1	4.6	5.0	5.4	5.9	6.3	6.7	7.2	7.6	8.0
10								4.3	4.8	5.2	5.6	6.1	6.5	6.9	7.4	7.8	8.2
12									5.2	5.6	6.1	6.5	6.9	7.4	7.8	8.2	8.7
14										6.1	6.5	6.9	7.4	7.8	8.2	8.7	9.1
16											6.9	7.4	7.8	8.2	8.7	9.1	9.5
18												7.8	8.2	8.7	9.1	9.5	10.0
20													8.7	9.1	9.5	10.0	10.4
22														9.5	10.0	10.4	10.9
24															10.4	10.9	11.3
26																11.3	11.7
28																	12.2

NOTES:

WEIGHTS INCLUDE ALLOWANCE FOR LAPS AND SEAMS.

REFER TO PAGE APP1.6 FOR DIFFERENT GAGE WEIGHT CONVERSIONS.

MASON WEST, INC.
1601 E. Miraloma Ave. Placentia, CA 92870
TEL (714) 630 - 0701, www.masonwest.com

Jiefu "Jeff" Zhang, SE
California SE No. S5270

PAGE

APP1.0

DUCT WEIGHTS

GALVANIZED RECTANGULAR DUCT

22 GAGE - SIZES 30" x 3" TO 40" x 40"

(LBS/FT)

SIZE (IN)	30	32	34	36	38	40
3	8.6	9.1	9.7	10.2	10.7	11.2
4	8.9	9.4	9.9	10.4	11.0	11.5
5	9.1	9.7	10.2	10.7	11.2	11.7
6	9.4	9.9	10.4	11.0	11.5	12.0
7	9.7	10.2	10.7	11.2	11.7	12.3
8	9.9	10.4	11.0	11.5	12.0	12.5
9	10.2	10.7	11.2	11.7	12.3	12.8
10	10.4	11.0	11.5	12.0	12.5	13.1
12	11.0	11.5	12.0	12.5	13.1	13.6
14	11.5	12.0	12.5	13.1	13.6	14.1
16	12.0	12.5	13.1	13.6	14.1	14.6
18	12.5	13.1	13.6	14.1	14.6	15.1
20	13.1	13.6	14.1	14.6	15.1	15.7
22	13.6	14.1	14.6	15.1	15.7	16.2
24	14.1	14.6	15.1	15.7	16.2	16.7
26	14.6	15.1	15.7	16.2	16.7	17.2
28	15.1	15.7	16.2	16.7	17.2	17.7
30	15.7	16.2	16.7	17.2	17.7	18.3
32		16.7	17.2	17.7	18.3	18.8
34			17.7	18.3	18.8	19.3
36				18.8	19.3	19.8
38					19.8	20.4
40						20.9

NOTES:

WEIGHTS INCLUDE ALLOWANCE FOR LAPS AND SEAMS.

REFER TO PAGE APP1.6 FOR DIFFERENT GAGE WEIGHT CONVERSIONS.

MASON WEST, INC.
1601 E. Miraloma Ave. Placentia, CA 92870
TEL (714) 630 - 0701, www.masonwest.com

Jiefu "Jeff" Zhang, SE
California SE No. S5270

DUCT WEIGHTS

GALVANIZED RECTANGULAR DUCT

20 GAGE - SIZES 42" x 3" TO 58" x 58"

(LBS/FT)

SIZE (IN)	42	44	46	48	50	52	54	56	58
3	13.4	14.0	14.6	15.1	15.7	16.3	16.9	17.5	18.1
4	13.7	14.3	14.9	15.4	16.0	16.6	17.2	17.8	18.4
5	14.0	14.6	15.1	15.7	16.3	16.9	17.5	18.1	18.7
6	14.3	14.9	15.4	16.0	16.6	17.2	17.8	18.4	19.0
7	14.6	15.1	15.7	16.3	16.9	17.5	18.1	18.7	19.3
8	14.9	15.4	16.0	16.6	17.2	17.8	18.4	19.0	19.6
9	15.1	15.7	16.3	16.9	17.5	18.1	18.7	19.3	19.9
10	15.4	16.0	16.6	17.2	17.8	18.4	19.0	19.6	20.2
12	16.0	16.6	17.2	17.8	18.4	19.0	19.6	20.2	20.8
14	16.6	17.2	17.8	18.4	19.0	19.6	20.2	20.8	21.4
16	17.2	17.8	18.4	19.0	19.6	20.2	20.8	21.4	22.0
18	17.8	18.4	19.0	19.6	20.2	20.8	21.4	22.0	22.6
20	18.4	19.0	19.6	20.2	20.8	21.4	22.0	22.6	23.2
22	19.0	19.6	20.2	20.8	21.4	22.0	22.6	23.2	23.8
24	19.6	20.2	20.8	21.4	22.0	22.6	23.2	23.8	24.4
26	20.2	20.8	21.4	22.0	22.6	23.2	23.8	24.4	24.9
28	20.8	21.4	22.0	22.6	23.2	23.8	24.4	24.9	25.5
30	21.4	22.0	22.6	23.2	23.8	24.4	24.9	25.5	26.1
32	22.0	22.6	23.2	23.8	24.4	24.9	25.5	26.1	26.7
34	22.6	23.2	23.8	24.4	24.9	25.5	26.1	26.7	27.3
36	23.2	23.8	24.4	24.9	25.5	26.1	26.7	27.3	27.9
38	23.8	24.4	24.9	25.5	26.1	26.7	27.3	27.9	28.5
40	24.4	24.9	25.5	26.1	26.7	27.3	27.9	28.5	29.1
42	24.9	25.5	26.1	26.7	27.3	27.9	28.5	29.1	29.7
44		26.1	26.7	27.3	27.9	28.5	29.1	29.7	30.3
46			27.3	27.9	28.5	29.1	29.7	30.3	30.9
48				28.5	29.1	29.7	30.3	30.9	31.5
50					29.7	30.3	30.9	31.5	32.1
52						30.9	31.5	32.1	32.7
54							32.1	32.7	33.3
56								33.3	33.9
58									34.5

NOTES:

WEIGHTS INCLUDE ALLOWANCE FOR LAPS AND SEAMS.

REFER TO PAGE APP1.6 FOR DIFFERENT GAGE WEIGHT CONVERSIONS.

MASON WEST, INC.
1601 E. Miraloma Ave. Placentia, CA 92870
TEL (714) 630 - 0701, www.masonwest.com

Jiefu "Jeff" Zhang, SE
California SE No. S5270

DUCT WEIGHTS

GALVANIZED RECTANGULAR DUCT

18 GAGE - SIZES 60" x 6" TO 98" x 98"

(LBS/FT)

SIZE (IN)	60	62	64	66	68	70	72	74	76	78	80	82	84	86	88	90	92	94	96	98
6	25.4	26.2	27.0	27.7	28.5	29.3	30.0	30.8	31.6	32.3	33.1	33.9	34.7	35.4	36.2	37.0	37.7	38.5	39.3	40.0
8	26.2	27.0	27.7	28.5	29.3	30.0	30.8	31.6	32.3	33.1	33.9	34.7	35.4	36.2	37.0	37.7	38.5	39.3	40.0	40.8
10	27.0	27.7	28.5	29.3	30.0	30.8	31.6	32.3	33.1	33.9	34.7	35.4	36.2	37.0	37.7	38.5	39.3	40.0	40.8	41.6
12	27.7	28.5	29.3	30.0	30.8	31.6	32.3	33.1	33.9	34.7	35.4	36.2	37.0	37.7	38.5	39.3	40.0	40.8	41.6	42.4
14	28.5	29.3	30.0	30.8	31.6	32.3	33.1	33.9	34.7	35.4	36.2	37.0	37.7	38.5	39.3	40.0	40.8	41.6	42.4	43.1
16	29.3	30.0	30.8	31.6	32.3	33.1	33.9	34.7	35.4	36.2	37.0	37.7	38.5	39.3	40.0	40.8	41.6	42.4	43.1	43.9
18	30.0	30.8	31.6	32.3	33.1	33.9	34.7	35.4	36.2	37.0	37.7	38.5	39.3	40.0	40.8	41.6	42.4	43.1	43.9	44.7
20	30.8	31.6	32.3	33.1	33.9	34.7	35.4	36.2	37.0	37.7	38.5	39.3	40.0	40.8	41.6	42.4	43.1	43.9	44.7	45.4
22	31.6	32.3	33.1	33.9	34.7	35.4	36.2	37.0	37.7	38.5	39.3	40.0	40.8	41.6	42.4	43.1	43.9	44.7	45.4	46.2
24	32.3	33.1	33.9	34.7	35.4	36.2	37.0	37.7	38.5	39.3	40.0	40.8	41.6	42.4	43.1	43.9	44.7	45.4	46.2	47.0
26	33.1	33.9	34.7	35.4	36.2	37.0	37.7	38.5	39.3	40.0	40.8	41.6	42.4	43.1	43.9	44.7	45.4	46.2	47.0	47.7
28	33.9	34.7	35.4	36.2	37.0	37.7	38.5	39.3	40.0	40.8	41.6	42.4	43.1	43.9	44.7	45.4	46.2	47.0	47.7	48.5
30	34.7	35.4	36.2	37.0	37.7	38.5	39.3	40.0	40.8	41.6	42.4	43.1	43.9	44.7	45.4	46.2	47.0	47.7	48.5	49.3
32	35.4	36.2	37.0	37.7	38.5	39.3	40.0	40.8	41.6	42.4	43.1	43.9	44.7	45.4	46.2	47.0	47.7	48.5	49.3	50.1
34	36.2	37.0	37.7	38.5	39.3	40.0	40.8	41.6	42.4	43.1	43.9	44.7	45.4	46.2	47.0	47.7	48.5	49.3	50.1	50.8
36	37.0	37.7	38.5	39.3	40.0	40.8	41.6	42.4	43.1	43.9	44.7	45.4	46.2	47.0	47.7	48.5	49.3	50.1	50.8	51.6
38	37.7	38.5	39.3	40.0	40.8	41.6	42.4	43.1	43.9	44.7	45.4	46.2	47.0	47.7	48.5	49.3	50.1	50.8	51.6	52.4
40	38.5	39.3	40.0	40.8	41.6	42.4	43.1	43.9	44.7	45.4	46.2	47.0	47.7	48.5	49.3	50.1	50.8	51.6	52.4	53.1
42	39.3	40.0	40.8	41.6	42.4	43.1	43.9	44.7	45.4	46.2	47.0	47.7	48.5	49.3	50.1	50.8	51.6	52.4	53.1	53.9
44	40.0	40.8	41.6	42.4	43.1	43.9	44.7	45.4	46.2	47.0	47.7	48.5	49.3	50.1	50.8	51.6	52.4	53.1	53.9	54.7
46	40.8	41.6	42.4	43.1	43.9	44.7	45.4	46.2	47.0	47.7	48.5	49.3	50.1	50.8	51.6	52.4	53.1	53.9	54.7	55.4
48	41.6	42.4	43.1	43.9	44.7	45.4	46.2	47.0	47.7	48.5	49.3	50.1	50.8	51.6	52.4	53.1	53.9	54.7	55.4	56.2
50	42.4	43.1	43.9	44.7	45.4	46.2	47.0	47.7	48.5	49.3	50.1	50.8	51.6	52.4	53.1	53.9	54.7	55.4	56.2	57.0
52	43.1	43.9	44.7	45.4	46.2	47.0	47.7	48.5	49.3	50.1	50.8	51.6	52.4	53.1	53.9	54.7	55.4	56.2	57.0	57.8
54	43.9	44.7	45.4	46.2	47.0	47.7	48.5	49.3	50.1	50.8	51.6	52.4	53.1	53.9	54.7	55.4	56.2	57.0	57.8	58.5
56	44.7	45.4	46.2	47.0	47.7	48.5	49.3	50.1	50.8	51.6	52.4	53.1	53.9	54.7	55.4	56.2	57.0	57.8	58.5	59.3
58	45.4	46.2	47.0	47.7	48.5	49.3	50.1	50.8	51.6	52.4	53.1	53.9	54.7	55.4	56.2	57.0	57.8	58.5	59.3	60.1
60	46.2	47.0	47.7	48.5	49.3	50.1	50.8	51.6	52.4	53.1	53.9	54.7	55.4	56.2	57.0	57.8	58.5	59.3	60.1	60.8
62		47.7	48.5	49.3	50.1	50.8	51.6	52.4	53.1	53.9	54.7	55.4	56.2	57.0	57.8	58.5	59.3	60.1	60.8	61.6
64			49.3	50.1	50.8	51.6	52.4	53.1	53.9	54.7	55.4	56.2	57.0	57.8	58.5	59.3	60.1	60.8	61.6	62.4
66				50.8	51.6	52.4	53.1	53.9	54.7	55.4	56.2	57.0	57.8	58.5	59.3	60.1	60.8	61.6	62.4	63.1
68					52.4	53.1	53.9	54.7	55.4	56.2	57.0	57.8	58.5	59.3	60.1	60.8	61.6	62.4	63.1	63.9
70						53.9	54.7	55.4	56.2	57.0	57.8	58.5	59.3	60.1	60.8	61.6	62.4	63.1	63.9	64.7
72							55.4	56.2	57.0	57.8	58.5	59.3	60.1	60.8	61.6	62.4	63.1	63.9	64.7	65.5
74								57.0	57.8	58.5	59.3	60.1	60.8	61.6	62.4	63.1	63.9	64.7	65.5	66.2
76									58.5	59.3	60.1	60.8	61.6	62.4	63.1	63.9	64.7	65.5	66.2	67.0
78										60.1	60.8	61.6	62.4	63.1	63.9	64.7	65.5	66.2	67.0	67.8
80											61.6	62.4	63.1	63.9	64.7	65.5	66.2	67.0	67.8	68.5
82												63.1	63.9	64.7	65.5	66.2	67.0	67.8	68.5	69.3
84													64.7	65.5	66.2	67.0	67.8	68.5	69.3	70.1
86														66.2	67.0	67.8	68.5	69.3	70.1	70.8
88															67.8	68.5	69.3	70.1	70.8	71.6
90																69.3	70.1	70.8	71.6	72.4
92																	70.8	71.6	72.4	73.2
94																		72.4	73.2	73.9
96																			73.9	74.7
98																				75.5

NOTES:

WEIGHTS INCLUDE ALLOWANCE FOR LAPS AND SEAMS.

REFER TO PAGE APP1.6 FOR DIFFERENT GAGE WEIGHT CONVERSIONS.

MASON WEST, INC.
1601 E. Miraloma Ave. Placentia, CA 92870
TEL (714) 630 - 0701, www.masonwest.com

Jiefu "Jeff" Zhang, SE
California SE No. S5270

DUCT WEIGHTS

GALVANIZED ROUND DUCT

30 TO 24 GAGE - SIZES 3" TO 84"

(LBS/FT)

DIA. (IN)	30 GAGE		28 GAGE		26 GAGE		24 GAGE	
	SEAM GAGE		SEAM GAGE		SEAM GAGE		SEAM GAGE	
	SPIRAL	LONG.	SPIRAL	LONG.	SPIRAL	LONG.	SPIRAL	LONG.
3	0.60	0.60	0.70	0.71	0.90	0.82	1.00	1.05
4	0.80	0.77	0.90	0.92	1.20	1.06	1.30	1.60
5	0.90	0.94	1.10	1.12	1.40	1.30	1.60	1.66
6	1.10	1.11	1.40	1.32	1.70	4.54	2.00	1.96
7	1.30	1.28	1.60	1.53	1.90	1.77	2.40	2.26
8	1.50	1.46	1.90	1.73	2.10	2.01	2.60	2.57
9	1.60	1.63	2.00	1.94	2.30	2.25	3.00	2.87
10	1.90	1.80	2.20	2.14	2.50	0.25	3.30	3.17
11	2.00	1.97	2.40	2.35	2.80	2.72	3.60	3.48
12	2.20	2.14	2.60	2.55	3.00	2.96	3.80	3.78
14		2.49	3.00	2.96	3.50	3.43	4.40	4.38
16		2.83	3.40	3.37	4.00	3.91	5.10	4.99
18		3.18	3.80	3.78	4.40	4.38	5.70	5.59
20			4.20	4.19	5.00	4.86	6.40	6.20
22			4.70	4.60	5.40	5.33	7.00	6.80
24			5.20	5.01	6.00	5.80	7.80	7.41
26					6.60	6.28	8.50	8.02
28					7.00	6.75	8.90	8.62
30					7.10	7.23	9.30	9.23
32						7.70	10.10	9.83
34						8.18		10.44
36						8.65	11.50	11.05
40						9.60	12.80	12.26
44						10.55	14.40	13.47
48						11.50	15.40	14.68
50							16.00	15.28
54								16.50
56								17.10
60								18.31
72								21.95
84								25.58

NOTES:

WEIGHTS INCLUDE ALLOWANCE FOR LAPS AND SEAMS.

REFER TO PAGE APP1.6 FOR DIFFERENT GAGE WEIGHT CONVERSIONS.

MASON WEST, INC.
1601 E. Miraloma Ave. Placentia, CA 92870
TEL (714) 630 - 0701, www.masonwest.com

Jiefu "Jeff" Zhang, SE
California SE No. S5270

DUCT WEIGHTS

GALVANIZED ROUND DUCT

22 TO 16 GAGE - SIZES 3" TO 84"

(LBS/FT)

DIA. (IN)	22 GAGE		20 GAGE		18 GAGE		16 GAGE	
	SEAM GAGE		SEAM GAGE		SEAM GAGE		SEAM GAGE	
	SPIRAL	LONG.	SPIRAL	LONG.	SPIRAL	LONG.	SPIRAL	LONG.
3	1.20	1.28	1.30	1.51	2.00	1.97		2.42
4	1.50	1.65	1.80	1.94	2.60	2.53		3.12
5	2.00	2.02	2.30	2.38	3.20	3.10		3.81
6	2.40	2.39	2.60	2.81	3.70	3.66	5.00	4.51
7	2.80	2.75	3.30	3.24	4.30	4.23	4.80	5.20
8	3.20	3.12	3.70	3.68	4.80	4.79	6.70	5.90
9	3.50	3.49	4.00	4.11	5.30	5.36	7.50	6.60
10	4.00	3.86	4.70	4.54	6.00	5.92	8.30	7.29
11	4.40	4.23	5.10	4.98	6.70	6.49	9.10	7.98
12	4.70	4.60	5.20	5.41	7.20	7.05	10.00	8.68
14	5.40	5.33	6.40	6.28	8.30	8.19	11.70	10.08
16	6.20	6.07	7.30	7.15	9.40	9.32	13.40	11.47
18	6.90	6.80	8.10	8.01	10.50	10.45	15.00	12.86
20	7.80	7.54	9.00	8.88	11.70	11.58	16.70	14.25
22	8.40	8.28	9.90	9.75	12.90	12.71	18.40	15.84
24	9.50	9.01	11.00	10.83	14.40	13.84	20.00	17.04
26	10.30	9.75	12.20	11.48	15.80	14.97	21.70	18.43
28	11.00	10.49	12.90	12.35	16.50	16.10	23.40	19.82
30	11.80	11.22	13.60	13.22	17.20	17.23	25.00	21.21
32	12.60	11.96	14.60	14.09	18.90	18.36	26.70	22.60
34		12.70		14.95		19.49		24.00
36	14.20	13.43	16.66	15.82	21.50	20.62	30.00	25.38
40	15.50	14.91	18.50	17.56	23.80	22.88	33.40	28.17
44	17.40	16.38	20.50	19.29	26.70	25.15	36.70	30.96
48	18.70	17.85	22.20	21.03	29.20	27.41	40.10	33.74
50	19.50	18.59	23.30	21.89	30.00	28.54	41.70	35.13
54		20.06		23.63		30.80	45.10	37.91
56		20.79		24.50		31.93	46.70	39.31
60		22.27		26.23		34.19	50.10	42.09
72		26.69		31.44		40.98		50.44
84		31.11		36.64		47.76		58.79

NOTES:

WEIGHTS INCLUDE ALLOWANCE FOR LAPS AND SEAMS.

REFER TO PAGE APP1.6 FOR DIFFERENT GAGE WEIGHT CONVERSIONS.

MASON WEST, INC.
1601 E. Miraloma Ave. Placentia, CA 92870
TEL (714) 630 - 0701, www.masonwest.com

Jiefu "Jeff" Zhang, SE
California SE No. S5270

DUCT WEIGHTS

GALVANIZED SHEET METAL CONVERSION CHARTS

TABLE A - CONVERTING LIGHTER GAGES TO HEAVIER GAGES

GAGE	26	24	22	20	18	16
28	1.16	1.48	1.85	2.12	2.76	3.40
26		1.27	1.55	1.83	2.38	2.93
24			1.22	1.43	1.87	2.30
22				1.18	1.53	1.89
20					1.30	1.60
18						1.23

TABLE B - CONVERTING HEAVIER GAGES TO LIGHTER GAGES

GAGE	26	24	22	20	18	16
28	0.86	0.67	0.55	0.47	0.36	0.29
26		0.78	0.65	0.55	0.42	0.34
24			0.82	0.70	0.53	0.43
22				0.85	0.65	0.53
20					0.77	0.63
18						0.81

MASON WEST, INC.
1601 E. Miraloma Ave. Placentia, CA 92870
TEL (714) 630 - 0701, www.masonwest.com

Jiefu "Jeff" Zhang, SE
California SE No. S5270

PAGE
APP1.6

PIPE WEIGHTS - COPPER

TYPE L

PIPE DIA. (IN)	INSULATION THICKNESS (IN)	WEIGHT PER FOOT (LBS)			
		PIPE	WATER	INSULATION	TOTAL
1/4	1	0.126	0.034	0.2	0.360
3/8	1	0.198	0.063	0.3	0.561
1/2	1	0.285	0.101	0.4	0.786
5/8	1	0.362	0.150	0.5	1.012
3/4	1	0.455	0.209	0.6	1.264
1	1	0.7	0.4	0.7	1.8
1 1/4	1	0.9	0.6	0.8	2.3
1 1/2	1	1.1	0.8	0.9	2.8
2	1	1.8	1.4	1.0	4.2
2 1/2	1	2.5	2.1	1.2	5.8
3	1	3.3	3.0	1.3	7.6
3 1/2	1	4.3	4.0	1.5	9.8
4	1	5.4	5.2	1.8	12.4
5	1 1/2	7.6	8.1	2.9	18.6
6	1 1/2	10.2	11.6	3.3	25.1
8	1 1/2	19.3	20.3	4.1	43.7
10	1 1/2	30.1	31.6	5.2	66.9
12	1 1/2	40.4	45.4	6.0	91.8

TYPE K

PIPE DIA. (IN)	INSULATION THICKNESS (IN)	WEIGHT PER FOOT (LBS)			
		PIPE	WATER	INSULATION	TOTAL
1/4	1	0.133	0.044	0.2	0.377
3/8	1	0.269	0.055	0.3	0.624
1/2	1	0.344	0.094	0.4	0.838
5/8	1	0.418	0.144	0.5	1.062
3/4	1	0.641	0.188	0.6	1.429
1	1	0.837	0.343	0.7	1.88
1 1/4	1	1.04	0.53	0.8	2.37
1 1/2	1	1.36	0.74	0.9	3.0
2	1	2.06	1.30	1.0	4.36
2 1/2	1	2.92	2.02	1.2	6.14
3	1	4.00	2.87	1.3	8.17
3 1/2	1	5.12	3.89	1.5	10.51
4	1	6.51	5.09	1.8	13.4
5	1 1/2	9.67	7.87	2.9	20.4
6	1 1/2	13.9	11.2	3.3	28.4
8	1 1/2	25.9	19.5	4.1	49.4
10	1 1/2	40.3	30.3	5.2	75.8
12	1 1/2	57.8	43.2	6.0	107

MASON WEST, INC.
1601 E. Miraloma Ave. Placentia, CA 92870
TEL (714) 630 - 0701, www.masonwest.com

Jiefu "Jeff" Zhang, SE
California SE No. S5270

PAGE
APP2.0

PIPE WEIGHTS - STEEL

STANDARD SCHEDULE

PIPE DIA. (IN)	PIPE SCHEDULE	INSULATION THICKNESS (IN)	WEIGHT PER FOOT (LBS)			
			PIPE	WATER	INSULATION	TOTAL
1	40	1	1.7	0.4	0.7	2.8
1 1/4	40	1	2.3	0.7	0.8	3.8
1 1/2	40	1	2.7	0.9	0.9	4.5
2	40	1	3.7	1.5	1.0	6.2
2 1/2	40	1	5.8	2.1	1.2	9.1
3	40	1	7.6	3.2	1.3	12.1
4	40	1	11.0	5.5	1.8	18.3
5	40	1 1/2	15.0	8.7	2.9	26.6
6	40	1 1/2	19.0	12.5	3.3	34.8
8	40	1 1/2	29.0	22.0	4.1	55.1
10	40	1 1/2	41.0	34.0	5.2	80.2
12	40	1 1/2	54.0	49.0	6.0	109.0
14	30	1 1/2	55.0	60.0	7.0	122.0
16	30	1 1/2	63.0	79.0	7.5	150.0
18	30	1 1/2	82.0	100.0	8.0	190.0
20	20	1 1/2	79.0	126.0	8.5	214.0
24	20	1 1/2	95.0	184.0	10.0	289.0

SCHEDULE 40

PIPE DIA. (IN)	PIPE SCHEDULE	INSULATION THICKNESS (IN)	WEIGHT PER FOOT (LBS)			
			PIPE	WATER	INSULATION	TOTAL
14	40	1 1/2	63.0	61.5	7.0	129.5
16	40	1 1/2	83.0	80.5	7.5	167.0
18	40	1 1/2	105.0	102.0	8.0	210.0
20	40	1 1/2	123.0	117.4	8.5	251.9
24	40	1 1/2	171.0	184.0	10.0	355.0

MASON WEST, INC.
1601 E. Miraloma Ave. Placentia, CA 92870
TEL (714) 630 - 0701, www.masonwest.com

Jiefu "Jeff" Zhang, SE
California SE No. S5270

PAGE
APP2.1

PIPE WEIGHTS - STEEL (CONT.)

SCHEDULE 80

PIPE DIA. (IN)	PIPE SCHEDULE	INSULATION THICKNESS (IN)	WEIGHT PER FOOT (LBS)			
			PIPE	WATER	INSULATION	TOTAL
1	80	1	2.17	0.31	0.7	3.18
1 1/4	80	1	3.00	0.55	0.8	4.35
1 1/2	80	1	3.63	0.77	0.9	5.30
2	80	1	5.02	1.28	1.0	7.30
2 1/2	80	1	7.66	1.83	1.2	10.69
3	80	1	10.25	2.86	1.3	14.41
4	80	1	14.98	4.98	1.8	21.76
5	80	1 1/2	20.78	7.88	2.9	31.56
6	80	1 1/2	28.57	11.29	3.3	43.16
8	80	1 1/2	43.39	19.80	4.1	67.29
10	80	1 1/2	64.40	31.10	5.2	100.7
12	80	1 1/2	88.60	44.00	6.0	138.6
14	80	1 1/2	107.0	51.2	7.0	165.2
16	80	1 1/2	137.0	69.7	7.5	214.2
18	80	1 1/2	171.0	88.5	8.0	267.5
20	80	1 1/2	209.0	109.4	8.5	326.9
24	80	1 1/2	297.0	158.2	10.0	465.2

MASON WEST, INC.
1601 E. Miraloma Ave. Placentia, CA 92870
TEL (714) 630 - 0701, www.masonwest.com

Jiefu "Jeff" Zhang, SE
California SE No. S5270

PAGE
APP2.2

PIPE WEIGHTS - PVC

SCHEDULE 40 PVC PIPE				
PIPE DIA. (IN)	WALL THICKNESS (IN)	WEIGHT PER FOOT (LBS)		
		PIPE	WATER	TOTAL
1/2	0.109	0.15	0.13	0.28
3/4	0.113	0.20	0.23	0.43
1	0.133	0.30	0.37	0.67
1 1/4	0.140	0.40	0.65	1.05
1 1/2	0.145	0.48	0.88	1.36
2	0.154	0.64	1.45	2.10
2 1/2	0.203	1.02	2.07	3.09
3	0.216	1.33	3.20	4.53
3 1/2	0.226	1.60	4.28	5.88
4	0.237	1.90	5.51	7.41
5	0.258	2.77	8.66	11.43
6	0.280	3.34	12.15	15.49
8	0.322	5.28	21.60	26.88
10	0.366	7.51	34.10	41.61
12	0.406	10.02	48.50	58.52

SCHEDULE 80 PVC PIPE				
PIPE DIA. (IN)	WALL THICKNESS (IN)	WEIGHT PER FOOT (LBS)		
		PIPE	WATER	TOTAL
1/2	0.147	0.15	0.10	0.25
3/4	0.154	0.26	0.19	0.45
1	0.179	0.38	0.31	0.69
1 1/4	0.191	0.53	0.56	1.08
1 1/2	0.200	0.64	0.77	1.40
2	0.218	0.88	1.28	2.16
2 1/2	0.276	1.35	1.83	3.18
3	0.300	1.80	2.86	4.66
3 1/2	0.318	2.20	3.85	6.05
4	0.337	2.64	4.98	7.62
5	0.375	4.13	7.87	12.00
6	0.432	5.03	11.29	16.32
8	0.500	8.02	19.80	27.82
10	0.593	11.89	31.10	42.99
12	0.687	16.37	44.00	60.37

MASON WEST, INC.
1601 E. Miraloma Ave. Placentia, CA 92870
TEL (714) 630 - 0701, www.masonwest.com

Jiefu "Jeff" Zhang, SE
California SE No. S5270

PAGE
APP2.3

PIPE WEIGHTS - CAST IRON

NO-HUB CAST IRON PIPE (TYPICAL USES: WASTE, VENT, STORM DRAIN)			
PIPE DIA. (IN)	WEIGHT PER FOOT (LBS)		
	PIPE	WATER	TOTAL
1 1/2	2.5	0.9	3.4
2	3.6	1.5	5.1
3	5.2	3.2	8.4
4	7.4	5.6	13.0
5	9.4	8.6	18.0
6	11.0	12.4	23.4
8	18.0	22.2	40.2
10	25.8	35.0	60.8
12	32.5	49.6	82.1
15	49.7	79.1	128.8

PRESSURE CLASS 150 CAST IRON PIPE			
PIPE DIA. (IN)	WEIGHT PER FOOT (LBS)		
	PIPE	WATER	TOTAL
3	12.2	3.7	15.9
4	16.4	5.7	22.1
6	25.7	12.8	38.5
8	36.7	23.1	59.8
10	48.7	35.5	84.2
12	62.9	51.0	113.9
14	78.8	69.3	148.1
16	95.0	90.3	185.3
18	114.7	114.0	228.7
20	135.9	141.5	277.4
24	190.4	201.0	391.4

MASON WEST, INC.
1601 E. Miraloma Ave. Placentia, CA 92870
TEL (714) 630 - 0701, www.masonwest.com

Jiefu "Jeff" Zhang, SE
California SE No. S5270

PAGE
APP2.4

ELECTRICAL CONDUIT WEIGHT TABLES

CONDUIT WEIGHTS				
CONDUIT DIAMETER (IN)	PIPE TYPE	PIPE WEIGHT PER FOOT (LBS)		
		PIPE	WATER	TOTAL
½	ELECTRICAL METAL TUBING (EMT) WEIGHT	0.30	0.13	0.43
¾		0.46	0.23	0.69
1		0.67	0.37	1.04
1 ¼		1.01	0.65	1.66
1 ½		1.16	0.88	2.04
2		1.48	1.45	2.93
2 ½		2.16	2.54	4.70
3		2.63	3.83	6.46
3 ½		3.49	5.00	8.49
4		3.93	6.39	10.32
5		---	---	---
6		---	---	---
½	INTERMEDIATE METAL CONDUIT (IMC) WEIGHT	0.62	0.15	0.77
¾		0.84	0.26	1.10
1		1.19	0.41	1.60
1 ¼		1.58	0.71	2.29
1 ½		1.94	0.96	2.90
2		2.56	1.57	4.13
2 ½		4.11	2.23	6.34
3		5.43	3.45	8.88
3 ½		6.29	4.59	10.88
4		7.00	5.91	12.91
5		---	---	---
6		---	---	---
½	RIGID METAL CONDUIT (RMC) WEIGHT	0.82	0.14	0.96
¾		1.09	0.24	1.33
1		1.61	0.38	1.99
1 ¼		2.18	0.66	2.84
1 ½		2.63	0.90	3.53
2		3.50	1.48	4.98
2 ½		5.59	2.11	7.70
3		7.27	3.25	10.52
3 ½		8.80	4.34	13.14
4		10.30	5.58	15.88
5		14.00	8.76	22.76
6		18.40	12.63	31.03

MASON WEST, INC.
1601 E. Miraloma Ave. Placentia, CA 92870
TEL (714) 630 - 0701, www.masonwest.com

Jiefu "Jeff" Zhang, SE
California SE No. S5270

PAGE
APP3.0

CABLE TRAY WEIGHT TABLES

CABLE TRAY WEIGHTS WITH DATA CABLE FILL							
TRAY DEPTH (IN)	TRAY WIDTH						
	6" (LBS/FT)	9" (LBS/FT)	12" (LBS/FT)	18" (LBS/FT)	24" (LBS/FT)	30" (LBS/FT)	36" (LBS/FT)
2	5.0	7.0	9.0	14.0	17.0	21.0	27.0
3	7.0	10.0	14.0	21.0	26.0	32.0	41.0
4	9.0	13.0	18.0	27.0	35.0	43.0	54.0
5	12.0	17.0	23.0	34.0	43.0	53.0	68.0
6	14.0	20.0	27.0	41.0	52.0	64.0	81.0

MASON WEST, INC.
1601 E. Miraloma Ave. Placentia, CA 92870
TEL (714) 630 - 0701, www.masonwest.com

Jiefu "Jeff" Zhang, SE
California SE No. S5270

PAGE
APP3.1