Facilities Development Division www.oshpd.ca.gov/fdd
400 R Street. Suite 200, Sacramento, California 95811-6213 Phone (916) 440-8300 Fax (916) 654-2973

APPLICATION FOR PREAPPROVAL

SPECIAL SEISMIC CERTIFICATION OF EQUIPMENT AND COMPONENTS

For Office Use Only

APPLICATION NO.

OSP – 0069 – 10

Check whether application is: NEW [ ] RENEWAL [X]

1.0

Energy Labs, Inc.
Manufacturer

Ray Irani
Manufacturer's Technical Representative

9651 Airway Road, Suite E. San Diego, CA 92154
Mailing Address

619.671.0100 Ext. 209
Telephone

rirani@energylabs.com
E-mail Address

2.0

Custom Air Handling Units
Product Name

Air Handling Unit
Product Type

Refer to attachment for complete description of certified products.
Product model No (List all unique product identification numbers and/or serial numbers)

General Description: Rigid base mounted custom air handling units and associated internal components. Approval is limited to subcomponents, configurations, and mountings equivalent to tested units and shown in the attachments.

3.0

Tobolski Watkins Engineering, Inc.
Applicant Company Name

Matthew J. Tobolski, Ph.D., S.E.
Contact Person

9246 Lightwave Avenue, Suite 140, San Diego, CA 92123
Mailing Address

858.381.5843
Telephone

mtobolski@tobolskiwatkins.com
E-mail Address

I hereby agree to reimburse the Office of Statewide Health Planning and Development for the actual costs incurred by the department for review.

Signature of Applicant

08/22/2012
Date

President & CEO
Title

Tobolski Watkins Engineering, Inc.
Company Name

4.0 ***Registered Design Professional Preparing the Report***

Tobolski Watkins Engineering Inc.
Company Name

Matthew J. Tobolski, Ph.D, S.E. — *Contact Name*
C 72806 — *California License Number*
9246 Lightwave Avenue, Suite 140, San Diego, CA 92123 — *Mailing Address*
858.381.5843 — *Telephone*
mtobolski@tobolskiwatkins.com — *E-mail Address*

5.0 ***California Licensed Structural Engineer Review and Acceptance of the Report***

Tobolski Watkins Engineering Inc.
Company Name

Derrick A. Watkins, S.E. — *Contact Name*
S 5257 — *California License Number*
9246 Lightwave Avenue, Suite 140, San Diego, CA 92123 — *Mailing Address*
858.381.5843 — *Telephone*
dwatkins@tobolskiwatkins.com — *E-mail Address*

6.0 ***Anchorage Pre-Approval***

☐ *Anchorage is pre-approved under OPA-*
(Separate application for anchorage pre-approval is required)

☒ Anchorage is not Pre-approved

7.0 ***Certification Method***

☐ *Testing in accordance with:* ☒ *ICC-ES AC-156* ☐ *Other (Please Specify):*

☐ *Analysis*
☐ *Experience data*
☐ *Combination of Testing, Analysis, and/or Experience Data (Please Specify):*

8.0 ***Testing Laboratory (if applicable)***

Clark Testing, Inc. // Trentec — *Company Name*
J.R. Antenucci // Timothy Geers — *Contact Name*
1801Rout 51, Jefferson Hills, PA 15025 // 4600 East Tech Drive, Cincinnati, OH 45245 — *Mailing Address*
412.387.1001 // 513.528.7900 — *Telephone*
jrantenucci@clarktesting.com // tgeers@curtisswright.com — E-mail:

9.0 ***Approval Parameters***

Design in accordance with ASCE 7-05 Chapter 13: ☒ Yes ☐ No

Design Basis of Equipment or Components (F_p/W_p) = ***4.34***

S_{DS} (Spectral response acceleration at short period) = ***1.93g***

a_p (In-structure equipment or component amplification factor) = ***2.5***

R_p (Equipment or component response modification factor) = ***2.0***

I_p (Importance factor) = ***1.5***

z/h (Height factor ratio)= ***1.0***

Equipment or Component fundamental period(s) = ***[See Attachment]***

Building period limits (if any) = ***None***

Overall dimensions and weight (or range thereof) = ***[See Attachment]***

Equipment or Components @ grade designed in accordance with ASCE 7-05 Chapter 15: ☐ Yes ☒ No

Design Basis of Equipment or Components (V/W) =

S_{DS} (Spectral response acceleration at short period) =

S_1 (Spectral response acceleration at 1 second period) =

R (Response modification coefficient)=1.0

Ω_0 (System overstrength factor) =1.0

C_d (Deflection amplification factor) =1.0

I_p (Importance factor) =1.5

Height to Center of Gravity above base =

Equipment or Component fundamental period(s) = Sec

Overall dimensions and weight (or range thereof) =

Tank(s) designed in accordance with ASME BPVC, 2007: ☐ Yes ☒ No

10.0 ***List of attachments supporting the special seismic certification of equipment or components:***

☒ *Test Report* ☐ *Drawings* ☐ *Manufacturer's Catalog*

☐ *Calculations* ☒ *Others (Please Specify):* ***Attachment A***

11.0 ***OSHPD Approval*** *(For Office Use Only)*

8/24/2012	**December 31, 2016**
Signature & Date	*Approval Expiration Date*
M. R. Karim, SHFR	S_{DS} (g) = **1.93** z/h = **1.0**
Name & Title	*Special Seismic Certification Valid Up to*

Condition of Approval (if any):

Special Seismic Certification
UUT Summary Sheet

TWEI Project No.:2010-0133-CO-003

Manufacturer: Energy Labs, Inc.

Model Line: Custom Air Handling Units

UUT	Unit Description	Report Number	Location	S_{DS}	z/h	I_p
1	Custom Prototype Test Unit – Small	EL:9224	Clark	1.93	1.0	1.5
2	Custom Prototype Test Unit – Medium	EL:9225	Clark	1.93	1.0	1.5
3	Custom Prototype Test Unit – Large 1	EL:9237	Clark	1.93	1.0	1.5
4	Custom Prototype Test Unit – Large 2	2010-0133-TR-001,Rev 0	Clark	1.93	1.0	1.5
5	Size 490 Plenum Fan (100hp)	EL:8901	Clark	1.93	1.0	1.5
6	Size 490 Plenum Fan (40hp)	EL:8901	Clark	1.93	1.0	1.5
7	Size 600 Plenum Fan (100hp)	EL:8901	Clark	1.93	1.0	1.5
8	Size 600 Plenum Fan (50hp)	EL:8901	Clark	1.93	1.0	1.5
9	Size 300 Plenum Fan (30hp)	EL:8901	Clark	1.93	1.0	1.5
10	Size 600 Plenum Fan (50hp)	Q0006.0	Trentec	1.93	1.0	1.5
11	Size 542 Plenum Fan (100hp)	Q0006.0	Trentec	1.93	1.0	1.5
12	Size 135 Plenum Fan (2hp)	2010-0133-TR-001,Rev 0	Clark	1.93	1.0	1.5
13	Size 600 Plenum Fan (150hp)	2010-0133-TR-001,Rev 0	Clark	1.93	1.0	1.5
14	Beckett HMB Series Gas Heater (HMB-1200)	EL:8888	Clark	1.93	1.0	1.5
15	Beckett HMB Series Gas Heater (HMB-1280)	EL:8888	Clark	1.93	1.0	1.5
16	Beckett HMA Series Gas Heater (HMA-960)	EL:8888	Clark	1.93	1.0	1.5
17	Danfoss VLT Series VFD (75hp)	El:8887	Clark	1.93	1.0	1.5
18	Square D ATV Series VFD (75hp)	El:8887	Clark	1.93	1.0	1.5
19	Control Panel	El:8887	Clark	1.93	1.0	1.5
20						
21						
22						
23						
24						
25						
26						
27						
28						

© 2010 Tobolski Watkins Engineering, Inc.

Tobolski Watkins Engineering, Inc. - 858-381-5843 - info@tobolskiwatkins.com

UUT – 1

UNIT UNDER TEST (UUT)
Summary Sheet

TWEI Project No.: 2010-0133-CO-003

Manufacturer:	Energy Labs, Inc.
Model Line:	Custom Air Handling Units
Model Number:	Custom Prototype Test Unit - Small

Product Construction Summary:
Panel Construction: 2" 304 Stainless Steel Panel with combination of galvanized BRT, aluminum and stainless steel liners; ***Dampers***: ELI Damper 7Hx12W (actuated); ***Doors***: "F" Door 14Wx63H w/ window and "S" Door 14Wx63H w/ window; ***Voltage:*** 206V / 240V / 460V

Options/Subcomponent Summary:
Fans: ELI QuadraFan-(2) 165 (1hp) w/ ELI automatic and manual flow valves; ***Coils***: ELI Coil rack with 24Lx24H/10 Row/10 FPI/ Cu-Bottom and 24Lx24H/10 Row/10 FPI/Al-Top; ***Filters***: Filter rack with 2" Pre-filters and 12" Final HEPA filters; ***Gas Furnace***: Beckett HMA-200 stainless steel housing; ***Control Enclosure***: 14Wx33Hx10D with control components and Danfoss VFD 2 HP.

UUT Properties

Weight (lb)	Dimensions (in)			Lowest Natural Frequency (Hz)		
	Depth	Width	Height	Front-Back	Side-Side	Vertical
4,600	96.0	96.0	96.0	9.0	8.9	13.3

UUT Highest Passed Seismic Run Information

Building Code	Test Criteria	S_{DS}	z/h	I_p	A_{FLX-H}	A_{RIG-H}	A_{FLX-V}	A_{RIG-V}
CBC 2010	ICC-ES AC 156	1.93	1.0	1.5	3.09	2.32	1.29	0.52

Test Mounting Details:

Unit mounted to shake table platen using (4) 3/4”-10 Grade 8 Bolts.

© 2010 Tobolski Watkins Engineering, Inc.

UUT – 2

UNIT UNDER TEST (UUT)
Summary Sheet

TWEI Project No.: 2010-0133-CO-003

Manufacturer:	Energy Labs, Inc.
Model Line:	Custom Air Handling Units
Model Number:	Custom Prototype Test Unit – Medium

Product Construction Summary:
Panel Construction: 4" Galvanized Steel Panel with Combination of Galvanized Liners and No Liners; ***Dampers:*** ELI Damper 52Wx63H (actuated); ***Louvers:*** OSA Louver 12Wx10H and OSA Louver 72Wx120H; ***Doors:*** "F" Door 18Wx63H w/ window and "S" Door 18Wx63H w/ window; ***Voltage:*** 206V / 240V / 460V

Options/Subcomponent Summary:
Fans: ELI Horizontal Belt Drive Plenum Fan 135 (1hp), ELI Quadra Fan - (2) 365 (60hp); ***Filter Rack:*** ELI 2" Pre-filter Vee Filter Bank; ***Sound Trap:*** ELI Model PB01 6Wx36L galvanized steel; ***Humidifier Grid:*** Dri-Steem Ultra-Sorb LV - 15Wx4Dx12H stainless steel; ***Control Enclosure:*** 18Wx33Hx10D with Controls and Yaskawa VFD 1 HP.

UUT Properties

Weight (lb)	Dimensions (in)			Lowest Natural Frequency (Hz)		
	Depth	Width	Height	Front-Back	Side-Side	Vertical
8,500	144.0	96.0	144.0	12.1	3.0	16.9

UUT Highest Passed Seismic Run Information

Building Code	Test Criteria	S_{DS}	z/h	I_p	A_{FLX-H}	A_{RIG-H}	A_{FLX-V}	A_{RIG-V}
CBC 2010	ICC-ES AC 156	1.93	1.0	1.5	3.09	2.32	1.29	0.52

Test Mounting Details:

Unit mounted to shake table platen using (6) 3/4"-10 Grade 8 Bolts.
** Run 1: (4) Walls in place, Run 2: (3) Walls in place, Run 3: (2) Walls in place (corner open)

© 2010 Tobolski Watkins Engineering, Inc.

UUT – 3

UNIT UNDER TEST (UUT)
Summary Sheet

TWEI Project No.: 2010-0133-CO-003

Manufacturer: Energy Labs, Inc.

Model Line: Custom Air Handling Units

Model Number: Custom Prototype Test Unit – Large 1

Product Construction Summary:
Panel Construction: 2" Galvanized Steel Panel with Galvanized Liners; ***Dampers:*** None; ***Louvers:*** None; ***Doors:*** "F" Door 18Wx63H w/ window and "S" Door 18Wx63H w/ window; ***Voltage:*** 206V / 240V / 460V

Options/Subcomponent Summary:
Fans: ELI Plenum Fan- Vert Invert Direct Drive 135 (1hp), Vert Invert Belt Drive 135 (1hp), Horiz Direct Drive 135 (1hp), Vert Belt Drive 135 (1hp), Vert Direct Drive 135 (1hp), ***Furnace:*** Beckett HMB-200V stainless; ***Coils:*** ELI 130Lx40.5H/4 Row/8 FPI - Cu, 130Lx40.5H/4 Rows/8 FPI – Al, 130Lx40.5H/4 Row/8 FPI – Al; ***Sound Trap:*** ELI Model LE09 18Wx84L stainless w/ wrapped insulation; ***Humidifier Grid:*** Dri-Steem Ultra-Sorb LV 135Wx4Dx125H; ***Control Enclosure:*** 16Wx30Hx10D with Controls and Square D VFD 1 HP.

UUT Properties

Weight (lb)	Dimensions (in)			Lowest Natural Frequency (Hz)		
	Depth	Width	Height	Front-Back	Side-Side	Vertical
12,000	144.0	144.0	144.0	1.7	2.3	3.3

UUT Highest Passed Seismic Run Information

Building Code	Test Criteria	S_{DS}	z/h	I_p	A_{FLX-H}	A_{RIG-H}	A_{FLX-V}	A_{RIG-V}
CBC 2010	ICC-ES AC 156	1.93	1.0	1.5	3.09	2.32	1.29	0.52

Test Mounting Details:

Unit mounted to shake table platen using (4) 5/8"-11 Grade 8 Bolts.
** Run 1: (4) Walls in place, Run 2: (2) Walls in place (ends open), Run 3: (1) Walls in place, Run 4: (0) Walls in place

© 2010 Tobolski Watkins Engineering, Inc.

UUT – 4

UNIT UNDER TEST (UUT)
Summary Sheet

TWEI Project No.: 2010-0133-CO-003

Manufacturer: Energy Labs, Inc.

Model Line: Custom Air Handling Units

Model Number: Custom Prototype Test Unit – Large 2

Product Construction Summary:
Panel Construction: 2" Galvanized Steel Panel with Galvanized Liners; ***Dampers:*** Tamco Damper with Ebtron Air-IQ System 12Hx12W and 60Hx60W; ***Louvers:*** Vibro-Acoustics Acoustical Louvers 30Hx12W and 120Hx30W; ***Doors:*** "F" Door 18Wx63H w/ window and "S" Door 18Wx63H w/ window; ***Voltage:*** 206V / 240V / 460V

Options/Subcomponent Summary:
Air Flow Probes: Ebtron 12" and 120" Duct/Plenum probes and Gold and Hybrid transmitters, Ebtron "Bleed" Airflow Sensor; ***Coils:*** ELI stacked coils (no rack) (2)129Wx63H/4 Rows/14 FPI-Cu top and bottom; ***Dessiccant Wheel:*** Rotor Source, Inc. 550 mm wheel with carbon steel frame and 1730 mm wheel with stainless steel frame; ***UV Lights:*** UVDI light fixtures with 18", 24" and 36" fixture mounted on frame; ***Controls:*** 82"x40" enclosure with Danfoss VLT 1.5 HP and 350 HP and controls; ***Louvers:*** (DxWxH) 6"x12"x30", 6"x30"x120" and 12"x12"x30"

UUT Properties

Weight (lb)	Dimensions (in)			Lowest Natural Frequency (Hz)		
	Depth	Width	Height	Front-Back	Side-Side	Vertical
9,760	144.0	147.0	144.0	5.3	3.5	15.2

UUT Highest Passed Seismic Run Information

Building Code	Test Criteria	S_{DS}	z/h	I_p	A_{FLX-H}	A_{RIG-H}	A_{FLX-V}	A_{RIG-V}
CBC 2010	ICC-ES AC 156	1.93	1.0	1.5	3.09	2.32	1.29	0.52

Test Mounting Details:

Unit mounted to shake table platen using (6) 1/4" x 6" long fillet welds.
** Unit tested with all (4) walls in place.

© 2010 Tobolski Watkins Engineering, Inc.

UUT – 5

UNIT UNDER TEST (UUT)
Summary Sheet

TWEI Project No.: 2010-0133-CO-003

Manufacturer: Energy Labs, Inc.

Model Line: Custom Air Handling Units

Model Number: Size 490 Plenum Fan (100hp)

Product Construction Summary:
Construction: Steel frame with sheet metal housing; ***Orientation:*** Horizontal; ***Drive:*** Direct Drive; ***Wheel:*** Aluminum; ***Voltage:*** 206V / 240V / 460V

Options/Subcomponent Summary:
Energy Labs automatic flow valve.
Spring Isolated base mounted to air handling unit base frame.

UUT Properties

Weight (lb)	Dimensions (in)			Lowest Natural Frequency (Hz)		
	Depth	Width	Height	Front-Back	Side-Side	Vertical
3,400	63.0	68.0	71.0	1.6	2.3	3.9

UUT Highest Passed Seismic Run Information

Building Code	Test Criteria	S_{DS}	z/h	I_p	A_{FLX-H}	A_{RIG-H}	A_{FLX-V}	A_{RIG-V}
CBC 2010	ICC-ES AC 156	1.93	1.0	1.5	3.09	2.32	1.29	0.52

Test Mounting Details:

Base skid mounted to shake table platen using (8) 1/2" x 1" long fillet welds. Fan attached to base skid using (4) Energy Labs 1" deflection spring isolators.

© 2010 Tobolski Watkins Engineering, Inc.

Tobolski Watkins Engineering, Inc. - 858-381-5843 - info@tobolskiwatkins.com

UUT – 6

UNIT UNDER TEST (UUT)
Summary Sheet

TWEI Project No.: 2010-0133-CO-003

Manufacturer: Energy Labs, Inc.

Model Line: Custom Air Handling Units

Model Number: Size 490 Plenum Fan (40hp)

Product Construction Summary:
Construction: Steel frame with sheet metal housing; ***Orientation:*** Vertical Inlet Down; ***Drive:*** Direct Drive; ***Wheel:*** Aluminum; ***Voltage:*** 206V / 240V / 460V

Options/Subcomponent Summary:
Spring Isolated base mounted to air handling unit base frame.

UUT Properties

Weight (lb)	Dimensions (in)			Lowest Natural Frequency (Hz)		
	Depth	Width	Height	Front-Back	Side-Side	Vertical
3,000	73.0	84.0	63.0	2.3	2.3	3.1

UUT Highest Passed Seismic Run Information

Building Code	Test Criteria	S_{DS}	z/h	I_p	A_{FLX-H}	A_{RIG-H}	A_{FLX-V}	A_{RIG-V}
CBC 2010	ICC-ES AC 156	1.93	1.0	1.5	3.09	2.32	1.29	0.52

Test Mounting Details:

Base skid mounted to shake table platen using (8) 1/2" x 2" long fillet welds. Fan attached to base skid using (4) Energy Labs 1" deflection spring isolators.

© 2010 Tobolski Watkins Engineering, Inc.

UUT – 7

UNIT UNDER TEST (UUT)
Summary Sheet

TWEI Project No.: 2010-0133-CO-003

Manufacturer: Energy Labs, Inc.

Model Line: Custom Air Handling Units

Model Number: Size 600 Plenum Fan (100hp)

Product Construction Summary:
Construction: Steel frame with sheet metal housing; ***Orientation:*** Horizontal; ***Drive:*** Belt Drive; ***Wheel:*** Aluminum; ***Voltage:*** 206V / 240V / 460V

Options/Subcomponent Summary:
Energy Labs automatic flow valve.
Spring Isolated base mounted to air handling unit base frame.

UUT Properties

Weight (lb)	Dimensions (in)			Lowest Natural Frequency (Hz)		
	Depth	Width	Height	Front-Back	Side-Side	Vertical
6,000	109.0	73.0	87.0	< 1	1.6	3.1

UUT Highest Passed Seismic Run Information

Building Code	Test Criteria	S_{DS}	z/h	I_p	A_{FLX-H}	A_{RIG-H}	A_{FLX-V}	A_{RIG-V}
CBC 2010	ICC-ES AC 156	1.93	1.0	1.5	3.09	2.32	1.29	0.52

Test Mounting Details:

Base skid mounted to shake table platen using (8) 1/2" x 1" long fillet welds. Fan attached to base skid using (4) Energy Labs 1" deflection spring isolators.

© 2010 Tobolski Watkins Engineering, Inc.

UUT – 8

UNIT UNDER TEST (UUT)
Summary Sheet

TWEI Project No.: 2010-0133-CO-003

Manufacturer: Energy Labs, Inc.

Model Line: Custom Air Handling Units

Model Number: Size 600 Plenum Fan (50hp)

Product Construction Summary:
Construction: Steel frame with sheet metal housing; ***Orientation:*** Vertical Inlet Down; ***Drive:*** Belt Drive; ***Wheel:*** Aluminum; ***Voltage:*** 206V / 240V / 460V

Options/Subcomponent Summary:
Spring Isolated base mounted to air handling unit base frame.

UUT Properties

Weight (lb)	Dimensions (in)			Lowest Natural Frequency (Hz)		
	Depth	Width	Height	Front-Back	Side-Side	Vertical
4,400	85.0	99.0	73.0	2.3	2.3	3.9

UUT Highest Passed Seismic Run Information

Building Code	Test Criteria	S_{DS}	z/h	I_p	A_{FLX-H}	A_{RIG-H}	A_{FLX-V}	A_{RIG-V}
CBC 2010	ICC-ES AC 156	1.93	1.0	1.5	3.09	2.32	1.29	0.52

Test Mounting Details:

Base skid mounted to shake table platen using (8) 1/2" x 1" long fillet welds. Fan attached to base skid using (4) Energy Labs 1" deflection spring isolators.

© 2010 Tobolski Watkins Engineering, Inc.

UUT – 9

UNIT UNDER TEST (UUT)
Summary Sheet

TWEI Project No.: 2010-0133-CO-003

Manufacturer: Energy Labs, Inc.

Model Line: Custom Air Handling Units

Model Number: Size 300 Plenum Fan (30hp)

Product Construction Summary:
Construction: Steel frame with sheet metal housing; ***Orientation:*** Horizontal; ***Drive:*** Belt Drive; ***Wheel:*** Aluminum; ***Voltage:*** 206V / 240V / 460V

Options/Subcomponent Summary:
Energy Labs automatic flow valve.
Spring Isolated base mounted to air handling unit base frame.

UUT Properties

Weight (lb)	Dimensions (in)			Lowest Natural Frequency (Hz)		
	Depth	Width	Height	Front-Back	Side-Side	Vertical
1,800	68.0	44.0	51.0	< 1	< 1	3.1

UUT Highest Passed Seismic Run Information

Building Code	Test Criteria	S_{DS}	z/h	I_p	A_{FLX-H}	A_{RIG-H}	A_{FLX-V}	A_{RIG-V}
CBC 2010	ICC-ES AC 156	1.93	1.0	1.5	3.09	2.32	1.29	0.52

Test Mounting Details:

Base skid mounted to shake table platen using (8) 1/2" x 1" long fillet welds. Fan attached to base skid using (4) Energy Labs 1" deflection spring isolators.

© 2010 Tobolski Watkins Engineering, Inc.

UUT – 10

UNIT UNDER TEST (UUT)
Summary Sheet

TWEI Project No.: 2010-0133-CO-003

Manufacturer: Energy Labs, Inc.

Model Line: Custom Air Handling Units

Model Number: Size 600 Plenum Fan (50hp)

Product Construction Summary:
Construction: Steel frame with sheet metal housing; ***Orientation:*** Vertical Inlet Up; ***Drive:*** Belt Drive; ***Wheel:*** Aluminum; ***Voltage:*** 206V / 240V / 460V

Options/Subcomponent Summary:
Energy Labs manual flow valve.
Spring Isolated base mounted to air handling unit base frame.

UUT Properties

Weight (lb)	Dimensions (in)			Lowest Natural Frequency (Hz)		
	Depth	Width	Height	Front-Back	Side-Side	Vertical
4,300	85	99	73	2.6	2.0	3.3

UUT Highest Passed Seismic Run Information

Building Code	Test Criteria	S_{DS}	z/h	I_p	A_{FLX-H}	A_{RIG-H}	A_{FLX-V}	A_{RIG-V}
CBC 2010	ICC-ES AC 156	1.93	1.0	1.5	3.09	2.32	1.29	0.52

Test Mounting Details:

Unit mounted to shake table platen using (8) 1/2”-13 Grade 5 Bolts.

© 2010 Tobolski Watkins Engineering, Inc.

UUT – 11

UNIT UNDER TEST (UUT)
Summary Sheet

TWEI Project No.: 2010-0133-CO-003

Manufacturer: Energy Labs, Inc.

Model Line: Custom Air Handling Units

Model Number: Size 542 Plenum Fan (100hp)

Product Construction Summary:
Construction: Steel frame with sheet metal housing; ***Orientation:*** Vertical Inlet Up; ***Drive:*** Direct Drive; ***Wheel:*** Aluminum; ***Voltage:*** 206V / 240V / 460V

Options/Subcomponent Summary:
Energy Labs automatic flow valve.
Non-Isolated base mounted to air handling unit base frame.

UUT Properties

Weight (lb)	Dimensions (in)			Lowest Natural Frequency (Hz)		
	Depth	Width	Height	Front-Back	Side-Side	Vertical
3,400	79.0	90.0	68.0	2.7	4.5	4.3

UUT Highest Passed Seismic Run Information

Building Code	Test Criteria	S_{DS}	z/h	I_p	A_{FLX-H}	A_{RIG-H}	A_{FLX-V}	A_{RIG-V}
CBC 2010	ICC-ES AC 156	1.93	1.0	1.5	3.09	2.32	1.29	0.52

Test Mounting Details:

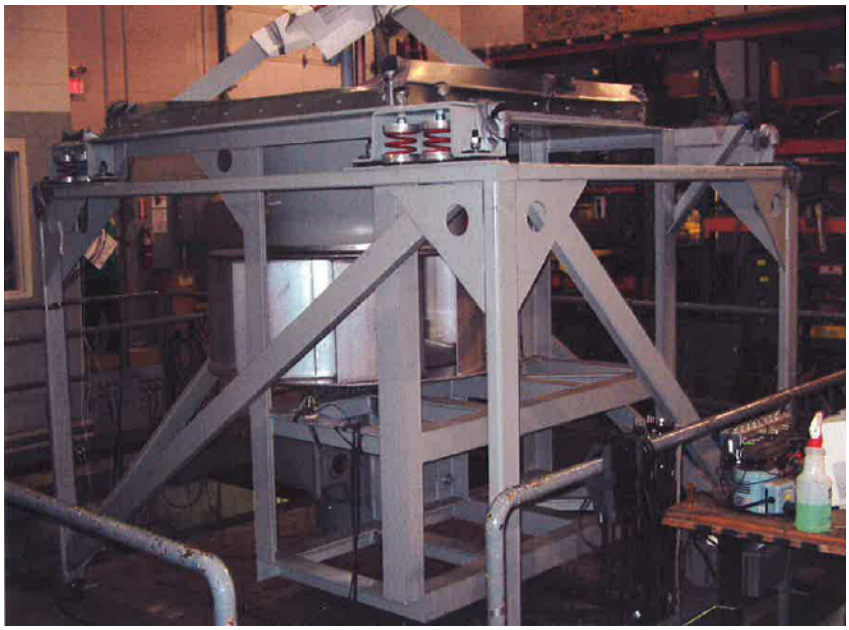

Unit mounted to shake table platen using (8) 1/2”-13 Grade 5 Bolts.

© 2010 Tobolski Watkins Engineering, Inc.

Tobolski Watkins Engineering, Inc. - 858-381-5843 - info@tobolskiwatkins.com

UUT – 12

UNIT UNDER TEST (UUT)
Summary Sheet

TWEI Project No.: 2010-0133-CO-003

Manufacturer: Energy Labs, Inc.

Model Line: Custom Air Handling Units

Model Number: Size 135 Plenum Fan (2hp)

Product Construction Summary:
Construction: Steel frame with sheet metal housing; ***Orientation:*** Vertical Inlet Down with Plenum; ***Drive:*** Direct Drive; ***Wheel:*** Aluminum; ***Voltage:*** 206V / 240V / 460V

Options/Subcomponent Summary:
Ebtron Duct & Plenum probes.

UUT Properties

Weight (lb)	Dimensions (in)			Lowest Natural Frequency (Hz)		
	Depth	Width	Height	Front-Back	Side-Side	Vertical
450	30.6	29.0	26.0+20 Plenum	25.4	25.2	4.81

UUT Highest Passed Seismic Run Information

Building Code	Test Criteria	S_{DS}	z/h	I_p	A_{FLX-H}	A_{RIG-H}	A_{FLX-V}	A_{RIG-V}
CBC 2010	ICC-ES AC 156	1.93	1.0	1.5	3.09	2.32	1.29	0.52

Test Mounting Details:

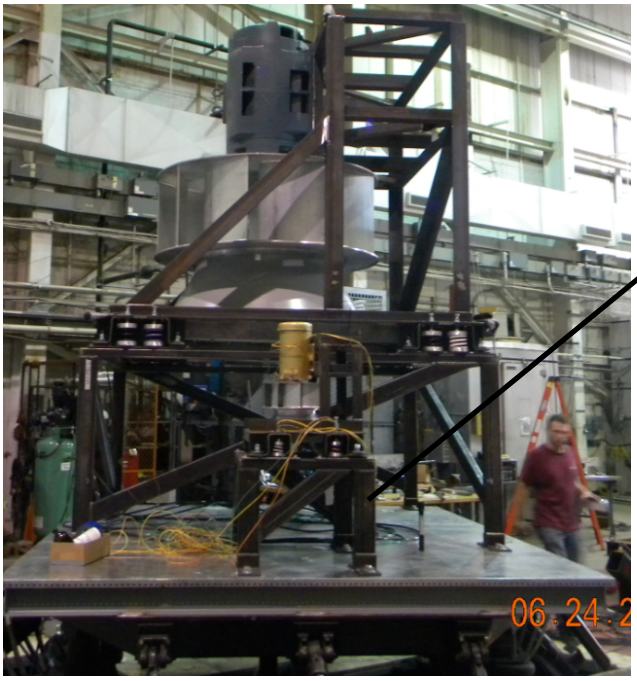

*Weight provided above does not include plenum weight

AHU Base Skid mounted to shake table platen using (6) ¼" x 6" long fillet welds. Fan Frames mounted to base skid using manufacturer provided hardware. (4) Energy Labs 1" deflection spring Isolators used for attachment of fans to lower frames.

© 2010 Tobolski Watkins Engineering, Inc.

UUT – 13

UNIT UNDER TEST (UUT)
Summary Sheet

TWEI Project No.: 2010-0133-CO-003

Manufacturer: Energy Labs, Inc.

Model Line: Custom Air Handling Units

Model Number: Size 600 Plenum Fan (150hp)

Product Construction Summary:
Construction: Steel frame with sheet metal housing; ***Orientation:*** Vertical Inlet Down with Plenum; ***Drive:*** Direct Drive; ***Wheel:*** Aluminum; ***Voltage:*** 206V / 240V / 460V

Options/Subcomponent Summary:
Ebtron Duct & Plenum probes.

UUT Properties

Weight (lb)	Dimensions (in)			Lowest Natural Frequency (Hz)		
	Depth	Width	Height	Front-Back	Side-Side	Vertical
3,400	99.0	85.0	73.8+42 Plenum	1.89	2.52	3.91

UUT Highest Passed Seismic Run Information

Building Code	Test Criteria	S_{DS}	z/h	I_p	A_{FLX-H}	A_{RIG-H}	A_{FLX-V}	A_{RIG-V}
CBC 2010	ICC-ES AC 156	1.93	1.0	1.5	3.09	2.32	1.29	0.52

Test Mounting Details:

*Weight provided above does not include plenum weight

AHU Base Skid mounted to shake table platen using (6) ¼" x 6" long fillet welds. Fan Frames mounted to base skid using manufacturer provided hardware. (4) Energy Labs 1" deflection spring Isolators used for attachment of fans to lower frames.

© 2010 Tobolski Watkins Engineering, Inc.

UUT – 14

UNIT UNDER TEST (UUT)
Summary Sheet

TWEI Project No.: 2010-0133-CO-003

Manufacturer: Energy Labs, Inc.

Model Line: Custom Air Handling Units

Model Number: Beckett HMB Series Gas Heater (HMB-1200)

Product Construction Summary:
Series Configuration of HMB400 Furnaces. Galvanized steel housing.

Options/Subcomponent Summary:
AHU Mount (Wall & Floor).

UUT Properties

Weight (lb)	Dimensions (in)			Lowest Natural Frequency (Hz)		
	Depth	Width	Height	Front-Back	Side-Side	Vertical
1,010	106.0	22.0	109.0	> 34	22.6	> 34

UUT Highest Passed Seismic Run Information

Building Code	Test Criteria	S_{DS}	z/h	I_p	A_{FLX-H}	A_{RIG-H}	A_{FLX-V}	A_{RIG-V}
CBC 2010	ICC-ES AC 156	1.93	1.0	1.5	3.09	2.32	1.29	0.52

Test Mounting Details:

Unit mounted using (6) ½”-13 Grade 5 Bolts to Shake Table Platen & (4) 3/8”-16 Grade 5 Bolts to Wall Mount Fixture. Installed in Air Handling Unit per Manufacturer’s Details.

© 2010 Tobolski Watkins Engineering, Inc.

UUT – 15

UNIT UNDER TEST (UUT)
Summary Sheet

TWEI Project No.: 2010-0133-CO-003

Manufacturer: Energy Labs, Inc.

Model Line: Custom Air Handling Units

Model Number: Beckett HMB Series Gas Heater (HMB-1280)

Product Construction Summary:
Parallel Configuration of HMB400 Furnaces. Galvanized steel housing.

Options/Subcomponent Summary:
AHU Mount (Wall & Floor).

UUT Properties

Weight (lb)	Dimensions (in)			Lowest Natural Frequency (Hz)		
	Depth	Width	Height	Front-Back	Side-Side	Vertical
1,450	102.0	38.0	79.0	33.5	24.1	> 34

UUT Highest Passed Seismic Run Information

Building Code	Test Criteria	S_{DS}	z/h	I_p	A_{FLX-H}	A_{RIG-H}	A_{FLX-V}	A_{RIG-V}
CBC 2010	ICC-ES AC 156	1.93	1.0	1.5	3.09	2.32	1.29	0.52

Test Mounting Details:

Unit mounted using (6) ½”-13 Grade 5 Bolts to Shake Table Platen & (4) 3/8”-16 Grade 5 Bolts to Wall Mount Fixture. Installed in Air Handling Unit per Manufacturer’s Details.

© 2010 Tobolski Watkins Engineering, Inc.

UUT – 16

UNIT UNDER TEST (UUT)
Summary Sheet

TWEI Project No.: 2010-0133-CO-003

Manufacturer: Energy Labs, Inc.

Model Line: Custom Air Handling Units

Model Number: Beckett HMA Series Gas Heater (HMA-960)

Product Construction Summary:
Parallel Configuration of HMA400 Furnaces. Galvanized steel housing.

Options/Subcomponent Summary:
AHU Mount (Wall & Floor).

UUT Properties

Weight (lb)	Dimensions (in)			Lowest Natural Frequency (Hz)		
	Depth	Width	Height	Front-Back	Side-Side	Vertical
970	101.0	32.0	101.0	> 34	24.2	> 34

UUT Highest Passed Seismic Run Information

Building Code	Test Criteria	S_{DS}	z/h	I_p	A_{FLX-H}	A_{RIG-H}	A_{FLX-V}	A_{RIG-V}
CBC 2010	ICC-ES AC 156	1.93	1.0	1.5	3.09	2.32	1.29	0.52

Test Mounting Details:

Unit mounted using (6) ½”-13 Grade 5 Bolts to Shake Table Platen & (4) 3/8”-16 Grade 5 Bolts to Wall Mount Fixture. Installed in Air Handling Unit per Manufacturer’s Details.

© 2010 Tobolski Watkins Engineering, Inc.

UUT – 17

UNIT UNDER TEST (UUT)
Summary Sheet

TWEI Project No.: 2010-0133-CO-003

Manufacturer: Energy Labs, Inc.

Model Line: Custom Air Handling Units

Model Number: Danfoss VLT Series VFD (VLT FC-102P55K1T4 - 75hp)

Product Construction Summary:
Painted Steel Enclosure.
Voltage: 206V / 240V / 460V

Options/Subcomponent Summary:
AHU Wall Mount.

UUT Properties

Weight (lb)	Dimensions (in)			Lowest Natural Frequency (Hz)		
	Depth	Width	Height	Front-Back	Side-Side	Vertical
100	12.0	12.0	27.0	N/A	N/A	N/A

UUT Highest Passed Seismic Run Information

Building Code	Test Criteria	S_{DS}	z/h	I_p	A_{FLX-H}	A_{RIG-H}	A_{FLX-V}	A_{RIG-V}
CBC 2010	ICC-ES AC 156	1.93	1.0	1.5	3.09	2.32	1.29	0.52

Test Mounting Details:

UUT 1E

Unit mounted to wall mount fixture using (4) 3/8”-16 Grade 5 Bolts.

© 2010 Tobolski Watkins Engineering, Inc.

UUT – 18

UNIT UNDER TEST (UUT)
Summary Sheet

TWEI Project No.: 2010-0133-CO-003

Manufacturer: Energy Labs, Inc.

Model Line: Custom Air Handling Units

Model Number: Square D ATV Series VFD (ATV21HD55N4 - 75 hp)

Product Construction Summary:
Painted Steel Enclosure.
Voltage: 206V / 240V / 460V

Options/Subcomponent Summary:
AHU Wall Mount.

UUT Properties

Weight (lb)	Dimensions (in)			Lowest Natural Frequency (Hz)		
	Depth	Width	Height	Front-Back	Side-Side	Vertical
150	13.0	11.0	25.0	N/A	N/A	N/A

UUT Highest Passed Seismic Run Information

Building Code	Test Criteria	S_{DS}	z/h	I_p	A_{FLX-H}	A_{RIG-H}	A_{FLX-V}	A_{RIG-V}
CBC 2010	ICC-ES AC 156	1.93	1.0	1.5	3.09	2.32	1.29	0.52

Test Mounting Details:

UUT 2E

Unit mounted to wall mount fixture using (4) 3/8”-16 Grade 5 Bolts.

© 2010 Tobolski Watkins Engineering, Inc.

UUT – 19

UNIT UNDER TEST (UUT)
Summary Sheet

TWEI Project No.: 2010-0133-CO-003

Manufacturer: Energy Labs, Inc.

Model Line: Custom Air Handling Units

Model Number: Control Panel

Product Construction Summary:
Yaskawa ATV Series VFD Mounted inside Energy Labs, Inc. Control Enclosure.
Voltage: 206V / 240V / 460V

Options/Subcomponent Summary:
Control Components: Disconnect, circuit breakers, fuse blocks, contactors, motor protector, relays, transformers, timers, selector switches, indicator lights, controllers
VPD: Yaskawa E7 Series (VFD ATV21HD55N4 - 75 hp)

UUT Properties

Weight (lb)	Dimensions (in)			Lowest Natural Frequency (Hz)		
	Depth	Width	Height	Front-Back	Side-Side	Vertical
630	46.0	18.0	60.0	N/A	N/A	N/A

UUT Highest Passed Seismic Run Information

Building Code	Test Criteria	S_{DS}	z/h	I_p	A_{FLX-H}	A_{RIG-H}	A_{FLX-V}	A_{RIG-V}
CBC 2010	ICC-ES AC 156	1.93	1.0	1.5	3.09	2.32	1.29	0.52

Test Mounting Details:

Unit mounted to wall mount fixture using (8) 3/8”-16 Grade 5 Bolts.

© 2010 Tobolski Watkins Engineering, Inc.

Table 1

Special Seismic Certification Certified Product Matrix

TWEI Project No.: 2010-0133-CO-003

Manufacturer: Energy Labs, Inc.

Model Line: Custom Air Handling Units

Certified Product Construction Summary:
Units shall be constructed in accordance with Energy Labs seismic details, including: floor to base frame connections, wall to floor panel connections, seismic bracing requirements including lateral restraint at a maximum of 144" in all directions

Certified Options Summary:
Panel material: galvanized steel or stainless steel in either 2" or 4" panel thickness; ***Panel liners:*** galvanized steel, galvanized BRT steel, aluminum, stainless steel or without liner; ***Access doors:*** galvanized steel or stainless steel up to 36" wide x 73" tall (Type S, F, FTB); ***Other items:*** Rainhoods, bellmouth transitions, air blenders

Certified Mounting Summary:
Air handling units shall bear on structural members around perimeter of unit with maximum span perpendicular to air path of 12'. Shear and uplift connections shall be provided at a maximum of 8'. SEOR to design anchorage and details.

Building Code: CBC 2010 | ***Seismic Certification Limits:*** S_{DS} = 1.93g | ***z/h*** = 1.0 | I_p = 1.5

Model Line	Model	Dimension (in)			Weight (lb)	Notes	UUT
		Depth	Width	Height			
Custom Air Handling Units	Single tunnel units	40.0	40.0	33.0	100 psf Max Loading	With or without splits With or without vestibule See representative unit drawings for more information on dimensional restrictions	
		…					
		576.0	1728.0	144.0			
	Double tunnel units	80.0	60.0	33.0			
		…					
		1152.0	1728.0	144.0			
	L-shaped units	See representative unit drawings for details					
	T-shaped units						
	U-shaped units						

© 2010 Tobolski Watkins Engineering, Inc.

Table 2

Special Seismic Certification Certified Product Matrix

TWEI Project No.: 2010-0133-CO-003

Manufacturer: Energy Labs, Inc.

Model Line: Custom Air Handling Units – DAMPERS AND LOUVERS

Certified Product Construction Summary:
Louvers and dampers constructed of galvanized steel or stainless steel

Certified Options Summary:
Tamco dampers available with or without Ebtron Air-IQ flow measuring system.

Certified Mounting Summary:
Components installed within air handling unit walls.

Building Code: CBC 2010 | ***Seismic Certification Limits:*** S_{DS} = 1.93g | ***z/h*** = 1.0 | I_p = 1.5

Model Line	Model	Dimension (in)			Weight (lb)	Notes	UUT
		Depth	Width	Height			
Energy Labs, Inc. Outside Air Lover	Outside Air Louver	5.0	12.0	10.0	9		2
		…					
		5.0	72.0	120.0	297		2
Energy Labs, Inc. Control Dampers	Control Dampers	6.0	12.0	7.0	10.0		1
		…					
		6.0	52.0	63.0	107		2
		…					
		6.0	52.0	93.3	254		
Vibro-Acoustics Acoustical Louvers	Acoustical Louvers	6.0	12.0	30.0	36		4
		…					
		6.0	30.0	120.0	210		4
		12.0	12.0	30.0	72		4
		…					
		12.0	30.0	120.0	420		
Tamco Control Dampers	Control Dampers	4.0	12.0	12.0	5		
		…					
		4.0	60.0	60.0	125		
	Dampers with Ebtron AIR-IQ Flow Measuring System	18.0	12.0	12.0	14	Includes gold and hybrid series probes and transmitters	4
		…					
		18.0	60.0	60.0	185		4

© 2010 Tobolski Watkins Engineering, Inc.

Tobolski Watkins Engineering, Inc. - 858-381-5843 - info@tobolskiwatkins.com

Table 3

Special Seismic Certification Certified Product Matrix

TWEI Project No.: 2010-0133-CO-003

Manufacturer: Energy Labs, Inc.

Model Line: Custom Air Handling Units – COILS

Certified Product Construction Summary:
Copper tubes with aluminum or copper fins installed in casing constructed of galvanized or stainless steel

Certified Options Summary:
Tube wall thickness: 0.020”-0.049”; ***Fin thickness:*** 0.006”-0.010”; ***Fin spacing:*** 6-14 FPI; ***Rows of coils;*** 1-12 rows

Certified Mounting Summary:
Components installed within air handling unit and mounted with or without Energy Labs coil rack, with or without multiple coils in stacked configuration.

Building Code: CBC 2010 | ***Seismic Certification Limits:*** S_{DS} = 1.93g | ***z/h*** = 1.0 | I_p = 1.5

Model Line	Model	Dimension (in)			Weight (lb)	Notes	UUT
		Depth	Width	Height			
Energy Labs, Inc. Chiller Water Hot Water Steam DX	Coils	1 row	24.0	24.0	67	**Smallest**	
		…					
		12 row	192.0	63.0	9,877	**Largest**	
		Tested Components					
		2 row	129.0	63.0	1,200	See UUT Summary Sheets for tested component details.	4
		2 row	129.0	63.0	1,200		4
		4 row	132.5	42.0	442		3
		4 row	132.5	42.0	442		3
		4 row	132.5	42.0	795		3
		10 row	26.5	26.5	176		1
		10 row	26.5	26.5	297		1

© 2010 Tobolski Watkins Engineering, Inc.

Table 4-1

Special Seismic Certification Certified Product Matrix

TWEI Project No.: 2010-0133-CO-003

Manufacturer: Energy Labs, Inc.

Model Line: Custom Air Handling Units – FANS

Certified Product Construction Summary:
Fan frame constructed of carbon steel with sheet metal housings with aluminum wheels.
Fans are mounted within air handling unit.

Certified Options Summary:
Motor horsepower: 0.5 – 150 HP; ***Flow valves:*** Energy Labs flow valves (manual or automatic); ***Voltage:*** 206V / 240V / 460V

Certified Mounting Summary:
Horizontal plenum fans connected to base with Energy Labs restrained vibration isolators.

Building Code: CBC 2010 | ***Seismic Certification Limits:*** S_{DS} = 1.93g | ***z/h*** = 1.0 | I_p = 1.5

Model Line	Model	Dimension (in)			Weight (lb)	Notes	UUT
		Depth	Width	Height			
Energy Labs, Inc. Plenum Fans Horizontal Belt Drive	135	27.3	37.0	25.0	422		2
	150	29.0	38.0	27.8	496		
	165	32.4	51.0	30.0	679		
	182	33.3	52.0	33.0	865		
	200	34.5	55.0	36.0	933		
	222	36.5	58.5	39.8	1,180		
	245	38.4	60.5	42.8	1,311		
	270	40.6	63.5	47.3	1,407		
	300	44.1	68.0	51.0	1,585		9
	330	49.3	72.0	53.5	1,746		
	365	51.3	75.0	57.5	2,415		
	402	55.9	80.0	64.0	2,732		
	445	59.1	88.5	68.0	2,866		
	490	62.9	97.0	74.0	3,411		
	542	68.6	103.0	79.5	4,329		
	600	73.3	109.0	87.0	4,694		7

© 2010 Tobolski Watkins Engineering, Inc.

Table 4-2

Special Seismic Certification Certified Product Matrix

TWEI Project No.: 2010-0133-CO-003

Manufacturer: Energy Labs, Inc.

Model Line: Custom Air Handling Units – FANS

Certified Product Construction Summary:
Fan frame constructed of carbon steel with sheet metal housings with aluminum wheels.
Fans are mounted within air handling unit.

Certified Options Summary:
Motor horsepower: 0.5 – 150 HP; ***Flow valves:*** Energy Labs flow valves (manual or automatic); ***Voltage:*** 206V / 240V / 460V

Certified Mounting Summary:
Horizontal plenum fans connected to base with Energy Labs restrained vibration isolators.

Building Code: CBC 2010 | ***Seismic Certification Limits:*** S_{DS} = 1.93g | ***z/h*** = 1.0 | I_p = 1.5

Model Line	Model	Dimension (in)			Weight (lb)	Notes	UUT
		Depth	Width	Height			
Energy Labs, Inc. Plenum Fans Horizontal Direct Drive	135	26.9	22.0	27.0	410		3
	150	28.3	23.0	28.9	515		
	165	29.0	25.0	31.3	642		
	182	30.5	26.0	32.3	887		
	200	34.0	29.0	34.9	949		
	222	39.5	32.5	37.4	1,171		
	245	41.0	34.5	40.4	1,334		
	270	43.5	37.5	43.5	1,498		
	300	45.5	42.0	48.0	1,479		
	330	52.0	46.0	52.3	1,741		
	365	51.0	49.0	56.5	1,880		
	402	57.5	54.0	61.3	2,010		
	445	64.5	58.5	65.3	2,112		
	490	67.5	63.0	71.3	2,941		5

© 2010 Tobolski Watkins Engineering, Inc.

Tobolski Watkins Engineering, Inc. - 858-381-5843 - info@tobolskiwatkins.com

Table 4-3

Special Seismic Certification Certified Product Matrix

TWEI Project No.: 2010-0133-CO-003

Manufacturer: Energy Labs, Inc.

Model Line: Custom Air Handling Units – FANS

Certified Product Construction Summary:
Fan frame constructed of carbon steel with sheet metal housings with aluminum wheels.
Fans are mounted within air handling unit.

Certified Options Summary:
Motor horsepower: 0.5 – 150 HP; ***Plenum section:*** Vertical inlet down fans can be provided with steel frame plenum below inlet (up to 42" tall); ***Flow valves:*** Energy Labs flow valves (manual or automatic); ***Voltage:*** 206V / 240V / 460V

Certified Mounting Summary:
Vertical inlet down fans w/o plenum connected with Energy Labs restrained vibration isolators to base. All other fans connect to frame with Energy Labs restrained vibration isolators and frame rigid mounted to base.

Building Code: CBC 2010 | ***Seismic Certification Limits:*** S_{DS} = 1.93g | ***z/h*** = 1.0 | I_p = 1.5

Model Line	Model	Dimension (in)			Weight (lb)	Notes	UUT
		Depth	Width	Height			
Energy Labs, Inc. Plenum Fans Vertical Inlet Down Belt Drive	135	30.5	29.0	29.0	414		3
	150	33.3	30.0	30.0	471		
	165	36.5	32.0	32.0	577		
	182	37.5	33.0	33.0	773		
	200	40.5	36.0	36.0	841		
	222	44.3	39.5	39.5	1,066		
	245	48.3	41.5	41.5	1,213		
	270	51.8	44.5	44.5	1,256		
	300	55.5	49.0	49.0	1,096		
	330	61.5	56.0	49.4	1,831		
	365	65.5	59.0	51.9	1,897		
	402	73.0	64.0	56.1	2,152		
	445	77.0	68.5	59.3	2,251		
	490	84.0	73.0	63.0	2,449		
	542	89.5	79.0	67.8	3,268		
	600	99.0	85.0	73.4	3,592		8

© 2010 Tobolski Watkins Engineering, Inc.

Table 4-4

Special Seismic Certification Certified Product Matrix

TWEI Project No.: 2010-0133-CO-003

Manufacturer: Energy Labs, Inc.

Model Line: Custom Air Handling Units – FANS

Certified Product Construction Summary:
Fan frame constructed of carbon steel with sheet metal housings with aluminum wheels.
Fans are mounted within air handling unit.

Certified Options Summary:
Motor horsepower: 0.5 – 150 HP; ***Plenum section:*** Vertical inlet down fans can be provided with steel frame plenum below inlet (up to 42" tall); ***Flow valves:*** Energy Labs flow valves (manual or automatic); ***Voltage:*** 206V / 240V / 460V

Certified Mounting Summary:
Vertical inlet down fans w/o plenum connected with Energy Labs restrained vibration isolators to base. All other fans connect to frame with Energy Labs restrained vibration isolators and frame rigid mounted to base.

Building Code: CBC 2010 | ***Seismic Certification Limits:*** S_{DS} = 1.93g | ***z/h*** = 1.0 | I_p = 1.5

Model Line	Model	Dimension (in)			Weight (lb)	Notes	UUT
		Depth	Width	Height			
Energy Labs, Inc. Plenum Fans Vertical Inlet Down Direct Drive	135	30.5	29.0	26.0	414		3/12
	150	33.3	30.0	27.0	471		
	165	36.5	32.0	30.3	577		
	182	37.5	33.0	31.5	773		
	200	40.5	36.0	33.1	841		
	222	44.3	39.5	34.6	1,066		
	245	48.3	41.5	37.2	1,213		
	270	51.8	44.5	39.6	1,256		
	300	55.5	49.0	42.3	1,096		
	330	61.5	56.0	49.4	1,586		
	365	65.5	59.0	51.9	1,652		
	402	73.0	64.0	56.1	1,907		
	445	77.0	68.5	59.3	2,006		
	490	84.0	73.0	63.0	2,204		6
	542	89.5	79.0	67.8	3,023		
	600	99.0	85.0	73.8	3,347		13

© 2010 Tobolski Watkins Engineering, Inc.

Table 4-5

Special Seismic Certification Certified Product Matrix

TWEI Project No.: 2010-0133-CO-003

Manufacturer: Energy Labs, Inc.

Model Line: Custom Air Handling Units – FANS

Certified Product Construction Summary:
Fan frame constructed of carbon steel with sheet metal housings with aluminum wheels.
Fans are mounted within air handling unit.

Certified Options Summary:
Motor horsepower: 0.5 – 150 HP; ***Flow valves:*** Energy Labs flow valves (manual or automatic); ***Voltage:*** 206V / 240V / 460V

Certified Mounting Summary:
Vertical inlet up fans connected with Energy Labs restrained vibration isolators and frame rigid mounted to base.

Building Code: CBC 2010 | ***Seismic Certification Limits:*** S_{DS} = 1.93g | ***z/h*** = 1.0 | I_p = 1.5

Model Line	Model	Dimension (in)			Weight (lb)	Notes	UUT
		Depth	Width	Height			
Energy Labs, Inc. Plenum Fans Vertical Inlet Up Belt Drive	135	30.5	29.0	26.0	647		3
	150	33.3	30.0	27.0	721		
	165	36.5	32.0	30.3	864		
	182	37.5	33.0	31.5	1,065		
	200	40.5	36.0	33.1	1,151		
	222	44.3	39.5	34.6	1,408		
	245	48.3	41.5	37.2	1,595		
	270	51.8	44.5	39.6	1,656		
	300	55.5	49.0	42.3	1,524		
	330	61.5	56.0	49.4	2,300		
	365	65.5	59.0	51.9	2,380		
	402	73.0	64.0	56.1	2,685		
	445	77.0	68.5	59.3	2,831		
	490	84.0	73.0	63.0	3,108		
	542	89.5	79.0	67.8	3,933		
	600	99.0	85.0	73.4	4,284		10

© 2010 Tobolski Watkins Engineering, Inc.

Table 4-6

Special Seismic Certification Certified Product Matrix

TWEI Project No.: 2010-0133-CO-003

Manufacturer: Energy Labs, Inc.

Model Line: Custom Air Handling Units – FANS

Certified Product Construction Summary:
Fan frame constructed of carbon steel with sheet metal housings with aluminum wheels.
Fans are mounted within air handling unit.

Certified Options Summary:
Motor horsepower: 0.5 – 150 HP; ***Flow valves:*** Energy Labs flow valves (manual or automatic); ***Voltage:*** 206V / 240V / 460V

Certified Mounting Summary:
Vertical inlet up fans connected with Energy Labs restrained vibration isolators and frame rigid mounted to base.

Building Code: CBC 2010 | ***Seismic Certification Limits:*** S_{DS} = 1.93g | ***z/h*** = 1.0 | I_p = 1.5

Model Line	Model	Dimension (in)			Weight (lb)	Notes	UUT
		Depth	Width	Height			
Energy Labs, Inc. Plenum Fans Vertical Inlet Up Direct Drive	135	30.5	29.0	26.0	647		3
	150	33.3	30.0	27.0	721		
	165	36.5	32.0	30.3	864		
	182	37.5	33.0	31.5	1,065		
	200	40.5	36.0	33.1	1,151		
	222	44.3	39.5	34.6	1,408		
	245	48.3	41.5	37.2	1,595		
	270	51.8	44.5	39.6	1,656		
	300	55.5	49.0	42.3	1,524		
	330	61.5	56.0	49.4	2,055		
	365	65.5	59.0	51.9	2,135		
	402	73.0	64.0	56.1	2,440		
	445	77.0	68.5	59.3	2,586		
	490	84.0	73.0	63.0	2,863		
	542	89.5	79.0	67.8	3,433		11

© 2010 Tobolski Watkins Engineering, Inc.

Tobolski Watkins Engineering, Inc. - 858-381-5843 - info@tobolskiwatkins.com

Table 4-7

Special Seismic Certification Certified Product Matrix

TWEI Project No.: 2010-0133-CO-003

Manufacturer: Energy Labs, Inc.

Model Line: Custom Air Handling Units – FANS

Certified Product Construction Summary:
Fan frame constructed of carbon steel with sheet metal housings with aluminum wheels.
Fans are mounted within air handling unit.

Certified Options Summary:
Motor horsepower: 0.5 – 150 HP; ***Flow valves:*** Energy Labs flow valves (manual or automatic); ***Voltage:*** 206V / 240V / 460V

Certified Mounting Summary:
Optiline fan arrays connect to support frame with Energy Labs restrained vibration isolators and frame rigid mounted to base.
Optiline fan arrays are a stacked configuration of plenum fans.

Building Code: CBC 2010 | ***Seismic Certification Limits:*** S_{DS} = 1.93g | ***z/h*** = 1.0 | I_p = 1.5

Model Line	Model	Dimension (in)			Weight (lb)	Notes	UUT
		Depth	Width	Height			
Energy Labs, Inc. QuadraFan Array Horizontal Direct Drive	(2) 165	37.5	31.4	63.0	2,182		1
	(2) 182	41.0	34.3	68.5	2,790		
	(2) 200	43.3	37.2	74.6	3,100		
	(2) 222	45.5	40.9	81.9	3,598		
	(2) 245	46.3	44.7	89.6	4,120		
	(2) 270	47.5	48.8	97.9	4,374		
	(2) 300	50.9	60.5	98.3	5,902		
	(2) 330	52.5	65.5	107.3	6,682		
	(2) 365	55.1	72.5	117.8	7,170		2

© 2010 Tobolski Watkins Engineering, Inc.

Table 5-1

Special Seismic Certification Certified Product Matrix

TWEI Project No.: 2010-0133-CO-003

Manufacturer: Energy Labs, Inc.

Model Line: Custom Air Handling Units – FURNACES

Certified Product Construction Summary:
Furnaces installed within galvanized or stainless steel housing.

Certified Options Summary:
N/A

Certified Mounting Summary:
Components installed within air handling unit connected to unit base and blankoffs.

Building Code: CBC 2010 | ***Seismic Certification Limits:*** S_{DS} = 1.93g | ***z/h*** = 1.0 | I_p = 1.5

Model Line	Model	Dimension (in)			Weight (lb)	Notes	UUT
		Depth	Width	Height			
Beckett Furnace HMB Series Vertical Tube Orientation	200	21.5	101.5	21.0	83		3
	250	21.5	101.5	24.0	99		
	300	21.5	101.5	27.0	115		
	350	21.5	101.5	31.0	129		
	400	21.5	101.5	34.0	146		
	500	21.5	105.5	53.5	617		
	600	21.5	105.5	60.0	649		
	700	21.5	105.5	66.5	677		
	800	21.5	105.5	73.0	711		
	1050	21.5	105.5	98.8	945		
	1200	21.5	105.5	108.5	996		14
Beckett Furnace HMB Series Horizontal Tube Orientation	160	37.5	101.5	18.0	83		
	200	37.5	101.5	18.0	99		
	240	37.5	101.5	18.0	115		
	280	37.5	101.5	18.0	129		
	320	37.5	101.5	18.0	146		
	400	37.5	101.5	40.0	725		
	480	37.5	101.5	40.0	757		
	560	37.5	101.5	40.0	785		
	640	37.5	101.5	40.0	819		
	840	37.5	101.5	59.5	989		
	960	37.5	101.5	59.5	1040		
	1280	37.5	101.5	79.0	1337		15

© 2010 Tobolski Watkins Engineering, Inc.

Table 5-2

Special Seismic Certification Certified Product Matrix

TWEI Project No.: 2010-0133-CO-003

Manufacturer: Energy Labs, Inc.

Model Line: Custom Air Handling Units – FURNACES

Certified Product Construction Summary:
Furnaces installed within galvanized or stainless steel housing.

Certified Options Summary:
N/A

Certified Mounting Summary:
Components installed within air handling unit connected to unit base and blankoffs.

Building Code: CBC 2010 | ***Seismic Certification Limits:*** S_{DS} = 1.93g | ***z/h*** = 1.0 | I_p = 1.5

Model Line	Model	Dimension (in)			Weight (lb)	Notes	UUT
		Depth	Width	Height			
Beckett Furnace HMA Series Vertical Tube Orientation	200	31.6	70.0	22.0	111		1
	240	31.6	70.0	25.0	129		
	280	31.6	70.0	28.0	147		
	320	31.6	70.0	31.0	165		
	400	31.6	74.0	48.5	470		
	480	31.6	74.0	55.0	506		
	560	31.6	74.0	61.5	542		
	640	31.6	74.0	68.0	578		
	840	31.6	74.0	91.3	689		
	960	31.6	74.0	101.0	825		16

© 2010 Tobolski Watkins Engineering, Inc.

Table 6

Special Seismic Certification Certified Product Matrix

TWEI Project No.: 2011-0133-CO-003

Manufacturer: Energy Labs, Inc.

Model Line: Custom Air Handling Units – MISCELLANEOUS NON-ACTIVE COMPONENTS

Certified Product Construction Summary:
N/A

Certified Options Summary:
N/A

Certified Mounting Summary:
Components installed within air handling unit.

Building Code: CBC 2010 | ***Seismic Certification Limits:*** S_{DS} = 1.93g | ***z/h*** = 1.0 | I_p = 1.5

Model Line	Model	Dimension (in)			Weight (lb)	Notes	UUT
		Depth	Width	Height			
Sound Attenuators	Energy Labs, Inc Rectangular Silencers	36.0	6.0	26.0		Constructed of galvanized or stainless steel, with or without wrapped insulation. Dimensions listed are of individual modules.	
		…					
		36.0	6.0	136.0			2
		…					
		84.0	17.8	136.0			3
Filter Racks	Flat type 8 Vee type 8 Flat HEPA	3.0	12.0	12.0		Available with various filter efficiencies	
		…					
		3.0	36.0	72.0	30		2
		3.0	72.0	72.0	72		2
		3.0	48.0	96.0	103		1
		…					
		3.0	576.0	136.0			
Humidifier Grids	Dri-Steem Ultra-Sorb LV	4.0	15.0	21.0	48		2
		…					
		4.0	135.0	125.0	315		3

© 2010 Tobolski Watkins Engineering, Inc.

Tobolski Watkins Engineering, Inc. - 858-381-5843 - info@tobolskiwatkins.com

Table 7-1

Special Seismic Certification Certified Product Matrix

TWEI Project No.: 2010-0133-CO-003

Manufacturer: Energy Labs, Inc.

Model Line: Custom Air Handling Units – VARIABLE FREQUENCY DRIVES

Certified Product Construction Summary:
Components installed within Energy Labs control cabinets (12Wx8Dx24H to 48Wx18Dx82H) constructed of galvanized or stainless steel.

Certified Options Summary:
Subcomponents listed within this table are permitted to be installed within control cabinets.
Voltage: 206V / 240V / 460V

Certified Mounting Summary:
Control cabinets mounted either flush mount on unit walls or recess mounted within unit wall. Subcomponents listed below are connected to control cabinet.

Building Code: CBC 2010 | ***Seismic Certification Limits:*** S_{DS} = 1.93g | ***z/h*** = 1.0 | I_p = 1.5

Model Line	Model	Dimension (in)			Weight (lb)	Notes	UUT
		Depth	Width	Height			
Yaskawa E7 Series VFD CIMR Model Line	0.5 HP	6.3	5.5	11.0	7		
	…						
	1 HP	6.3	5.5	11.0	7		2
	…						
	100 HP	13.8	17.7	28.5	191		19
Square D Altivar 21 Series VFD ATV Model Line	1.0 HP	5.9	4.1	5.6	5		3
	…						
	75 HP	11.4	12.6	24.8	123		18
Danfoss VLT Series VFD FC-102 Model Line	1.5 HP	8.1	3.5	14.6	5	With or Without Disconnect With or Without Bypass	4
	…						
	2 HP	8.1	3.5	14.6	5		1
	75 HP	12.2	12.1	26.8	45		17
	…						
	350 HP	16.4	33.1	62.6	650		4

© 2010 Tobolski Watkins Engineering, Inc.

Tobolski Watkins Engineering, Inc. - 858-381-5843 - info@tobolskiwatkins.com

Table 7-2

Special Seismic Certification Certified Product Matrix

TWEI Project No.: 2010-0133-CO-003

Manufacturer: Energy Labs, Inc.

Model Line: Custom Air Handling Units – CONTROL PANELS AND ELECTRONICS

Certified Product Construction Summary:
Components installed within Energy Labs control cabinets (12Wx8Dx24H to 48Wx18Dx82H) constructed of galvanized or stainless steel.

Certified Options Summary:
Subcomponents listed within this table are permitted to be installed within control cabinets. Transformers are encapsulated with copper windings.

Certified Mounting Summary:
Control cabinets mounted either flush mount on unit walls or recess mounted within unit wall. Subcomponents listed below are connected to control cabinet.

Building Code: CBC 2010 | ***Seismic Certification Limits:*** S_{DS} = 1.93g | ***z/h*** = 1.0 | I_p = 1.5

Model Line	Model	Dimension (in)			Weight (lb)	Notes	UUT
		Depth	Width	Height			
Schneider Electric Main Disconnect Blocks	100 A						MULTIPLE UNITS
	…						
	1,000 A						
Schneider Electric Transformers	500 VA						
	…						
	3,000 VA						
Schneider Electric Motor Starters	2.5 A						
	…						
	220 A						
Schneider Electric Trans Circuit Breakers	2 A						
	…						
	8 A						
Schneider Electric	2 Position Switch						
	3 Position Switch						
Sprecher + Schuh	Indicator Lights						
Sprecher + Schuh Relays	24 V						
	…						
	120 V						
	24 VDC						
	…						
	24 VDC						
Little Fuse Fuses	1 A						
	…						
	200 A						

© 2010 Tobolski Watkins Engineering, Inc.

Tobolski Watkins Engineering, Inc. - 858-381-5843 - info@tobolskiwatkins.com

Table 7-3

Special Seismic Certification Certified Product Matrix

TWEI Project No.: 2010-0133-CO-003

Manufacturer: Energy Labs, Inc.

Model Line: Custom Air Handling Units – CONTROL PANELS AND ELECTRONICS

Certified Product Construction Summary:
Components installed within Energy Labs control cabinets (12Wx8Dx24H to 48Wx18Dx82H) constructed of galvanized or stainless steel.

Certified Options Summary:
Subcomponents listed within this table are permitted to be installed within control cabinets. Transformers are encapsulated with copper windings.

Certified Mounting Summary:
Control cabinets mounted either flush mount on unit walls or recess mounted within unit wall. Subcomponents listed below are connected to control cabinet.

Building Code: CBC 2010 | ***Seismic Certification Limits:*** S_{DS} = 1.93g | ***z/h*** = 1.0 | I_p = 1.5

Model Line	Model	Dimension (in)			Weight (lb)	Notes	UUT
		Depth	Width	Height			
Automated Logic Controllers, Expanders and HMI	I/O FLEX6126						MULTIPLE UNITS
	…						
	I/O PRO812						
	I/O FLEX8160						
	…						
	I/O PROEx48U						
	BACview6						
Cutler Hammer Transformers	24V 96 VA						
	…						
	24V 500 VA						

© 2010 Tobolski Watkins Engineering, Inc.

Table 8

Special Seismic Certification Certified Product Matrix

TWEI Project No.: 2010-0133-CO-003

Manufacturer: Energy Labs, Inc.

Model Line: Custom Air Handling Units – MISCELLANEOUS ACTIVE COMPONENTS

Certified Product Construction Summary:
Ebtron probes listed below constructed of aluminum or stainless steel.

Certified Options Summary:
N/A

Certified Mounting Summary:
Components installed within air handling unit.

Building Code: CBC 2010 | ***Seismic Certification Limits:*** S_{DS} = 1.93g | ***z/h*** = 1.0 | I_p = 1.5

Model Line	Model	Dimension (in)			Weight (lb)	Notes	UUT
		Depth	Width	Height			
UVDI UV Light Fixtures Energy Labs, Inc. Light Frame	Smallest frame	3.0	12.0	12.0		Frame constructed of galvanized or stainless steel Maximum distance between vertical supports is 60”	
	…						
	18” Fixture/Bulb	2.5	18.0	3.5	7		4
	24” Fixture/Bulb	2.5	24.0	3.5	10		4
	36” Fixture/Bulb	2.5	36.0	3.5	12		4
	…						
	Largest frame	3.0	576.0	133.0			
Rotor Source, Inc. Desiccant Dehumidification Cassette (PPSC)	550 mm Wheel	9.5	26.0	26.0	45	Rotor frame constructed of galvanized or stainless steel	4
	…						
	1730 mm Wheel	13.5	76.1	76.1	795		4
Ebtron Duct Probes Plenum Probes Fan Inlet Probes	12” Probe	1.2	12.0	1.2	2	UUT: Duct/plenum probe	4
	…						
	13” Probe	2.0	1.3	10.0	2	UUT: Fan inlet	12
	13” Probe	1.8	1.3	6.5	2	UUT: Fan inlet	12
	64” Probe	1.8	1.3	48.0	4	UUT: Fan inlet	13
	…						
	120” Probe	1.1	120.0	1.1	4	UUT: Duct/plenum probe	4
Ebtron Air Flow Transmitters	Gold Transmitter	2.5	6.7	9.3	2.2		4
	Hybrid Transmitter	2.0	5.8	6.5	1.2		4
Ebtron Bleed Sensor	N/A	3.8	2.7	1.0	1		4
Tamco / Ebtron	Dampers with Ebtron AIR-IQ Flow Measuring System	18.0	12.0	12.0	14	Includes gold and hybrid series probes and transmitters	4
		…					
		18.0	60.0	60.0	185		4

© 2010 Tobolski Watkins Engineering, Inc.

SINGLE TUNNEL UNIT

1. Louver (see Table 4)
2. Fan (see Table 1 & 2)
4. Control Panel (see Table 16,17,18)
5. Damper (see Table 5)
6. Access Door (see Table 13)
7. Humidifier (see Table 9)
8. Access Door (see Table 12)
9. Pre & Final Filter (see Table 7)
10. Coils (see Table 6)
12. Control Panel (see Table 16,17,18)
13. Fan (see Table 1 & 2)
14. Gas furnace (see Table 3)
15. Sound Traps (see Table 11)
16. Hepa Filters (see Table 7)

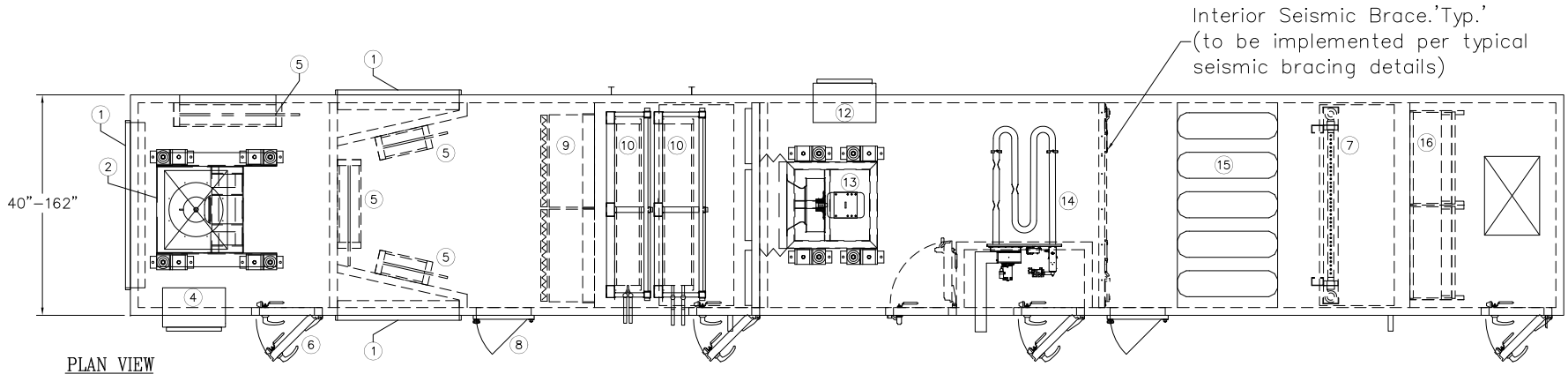

PLAN VIEW

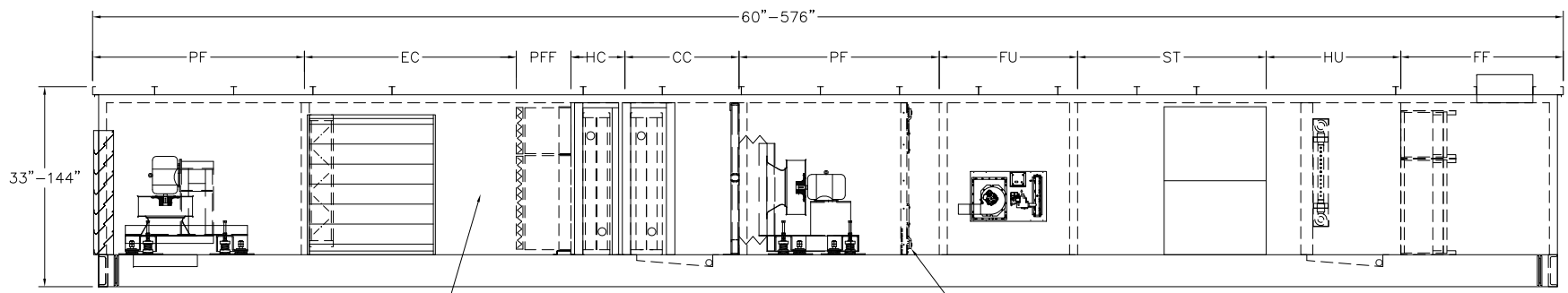

50% minimum of exterior wall surface to be solid wall or braced frame. Refer to typical seismic bracing detail for more information and general requirements.

Interior Seismic Brace.'Typ.'
(to be implemented per typical seismic bracing details)

SIDE VIEW

SECTIONS:

- AB = Air Blender
- CC = Cooling Coil
- CU = Condensing Unit
- DE = Direct Evaporative
- DF = DWDI Fan
- DX = DX Coil
- EC = Economizer
- FF = Final Filter
- FU = Furnace
- HC = Heating Coil
- IE = Indirect Evaporative
- MB = Mixing Box
- MS = Moisture Separator
- MZ = Multizone
- PF = Plenum Fan
- PFF = Pre/Final Filter
- PL = Plenum
- PR = Pre–Filter
- SC = Steam Coil
- ST = Sound Trap
- VF = Vee Filter

NOTES:

1. Wall insulation 2" and 4".
2. Cabinet Material: Galvanized Steel, Stainless Steel, Aluminum.
3. Stacked coils can be provided with or without coil rack using seismic details.
4. All dimensions are in inches unless otherwise specified.
5. Control panel could be in various locations on the unit.
6. Unit base heights 4" to 12"
7. Internal seismic braces to be implemented per the restrictions outlined on sheets "OSHPD Energy Labs Bracing" and "OSHPD Seismic Bracing Requirements".

NO.	DATE	REVISION	DWN	APP
1	9/14/11	NOTE #3 WAS CHANGED	JO	

PROJECT ENGINEER:	LE	07/08/10
DESIGN ENGINEER:	JO	07/08/10
DESCRIPTION:	Single Tunnel Unit	
DRAWING NAME:		
JOB NUMBER:		

Energy Labs Inc
9651 AIRWAY RD. SUITE E
SAN DIEGO, CA 92154
(619) 671–0100

QTY:
CFM:
MODEL:

JOB NAME: OSHPD–1 Single Tunnel Unit
UNIT TAG: AHU–1

SINGLE TUNNEL UNIT WITH SPLITS

1. Louver (see Table 4)
2. Fan (see Table 1 & 2)
4. Control Panel (see Table 16,17,18)
5. Damper (see Table 5)
6. Access Door (see Table 13)
7. Humidifier (see Table 9)
8. Access Door (see Table 12)
9. Pre & Final Filter (see Table 7)
10. Coils (see Table 6)
12. Control Panel (see Table 16,17,18)
13. Fan (see Table 1 & 2)
14. Gas furnace (see Table 3)
15. Sound Traps (see Table 11)
16. Hepa Filters (see Table 7)

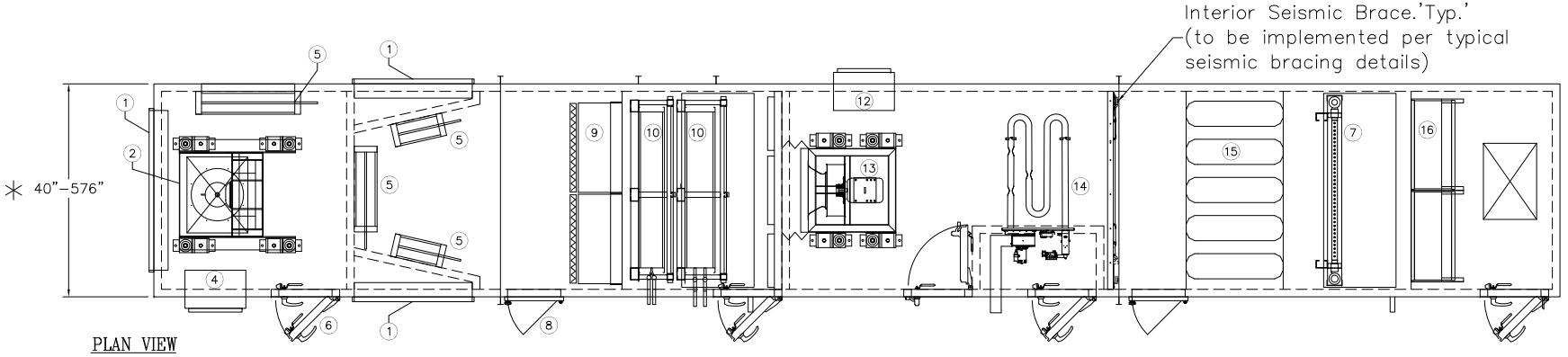

PLAN VIEW

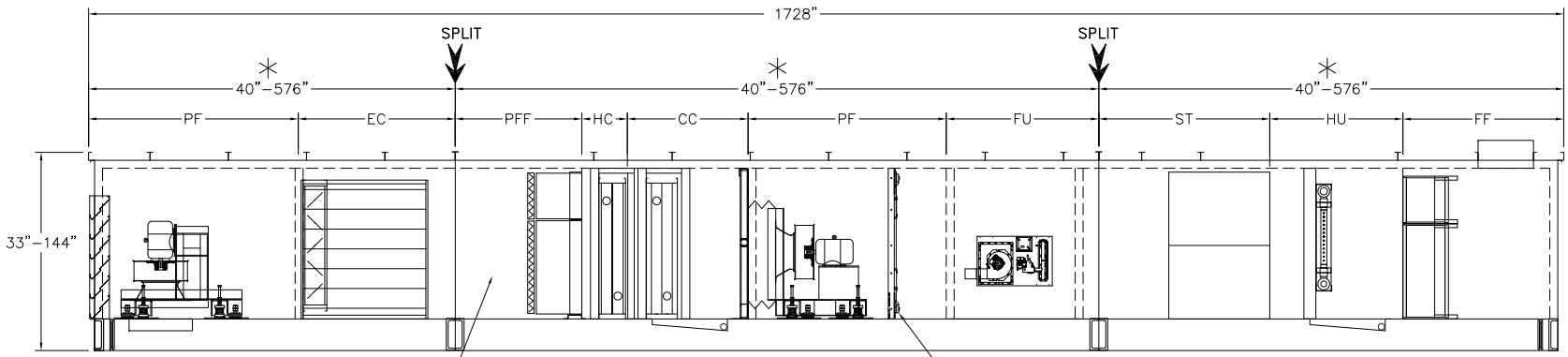

50% minimum of exterior wall surface to be solid wall or braced frame. Refer to typical seismic bracing detail for more information and general requirements.

Interior Seismic Brace.'Typ.'
(to be implemented per typical seismic bracing details)

SIDE VIEW

SECTIONS:

AB = Air Blender	MB = Mixing Box
CC = Cooling Coil	MS = Moisture Separator
CU = Condensing Unit	MZ = Multizone
DE = Direct Evaporative	PF = Plenum Fan
DF = DWDI Fan	PFF = Pre/Final Filter
DX = DX Coil	PL = Plenum
EC = Economizer	PR = Pre–Filter
FF = Final Filter	SC = Steam Coil
FU = Furnace	ST = Sound Trap
HC = Heating Coil	VF = Vee Filter
IE = Indirect Evaporative	

* SHIPPING RESTRICTIONS

	CABINET DIMENSIONS		
	LENGTH	HEIGHT	WIDTH
Max.	576	168	162

NOTES:

1. Wall insulation 2" and 4".
2. Cabinet Material: Galvanized Steel, Stainless Steel, Aluminum.
3. Stacked coils can be provided with or without coil rack using seismic details.
4. All dimensions are in inches unless otherwise specified.
5. Control panel could be in various locations on the unit.
6. Unit base heights 4" to 12"
*7. Split section dimensions will be defined by shipping restrictions.
8. Internal seismic braces to be implemented per the restrictions outlined on sheets "OSHPD Energy Labs Bracing" and "OSHPD Seismic Bracing Requirements".

NO.	DATE	REVISION	DWN	APP
1	9/14/11	NOTE #3 WAS CHANGED	JO	

PROJECT ENGINEER: LE 07/08/10
DESIGN ENGINEER: JO 07/08/10
DESCRIPTION: Single tunnel unit with splits
DRAWING NAME:
JOB NUMBER:

Energy Labs Inc
9651 AIRWAY RD. SUITE E
SAN DIEGO, CA 92154
(619) 671–0100

QTY:
CFM:
MODEL:
JOB NAME: OSHPD–2 Single Tunnel Unit With Splits
UNIT TAG: AHU–2

SINGLE TUNNEL UNIT WITH VESTIBULE

1. Louver (see Table 4)
2. Fan (see Table 1 & 2)
4. Control Panel (see Table 16,17,18)
5. Damper (see Table 5)
6. Access Door (see Table 13)
7. Humidifier (see Table 9)
8. Access Door (see Table 12)
9. Pre & Final Filter (see Table 7)
10. Coils (see Table 6)
12. Control Panel (see Table 16,17,18)
13. Fan (see Table 1 & 2)
14. Gas furnace (see Table 3)
15. Sound Traps (see Table 11)
16. Hepa Filters (see Table 7)

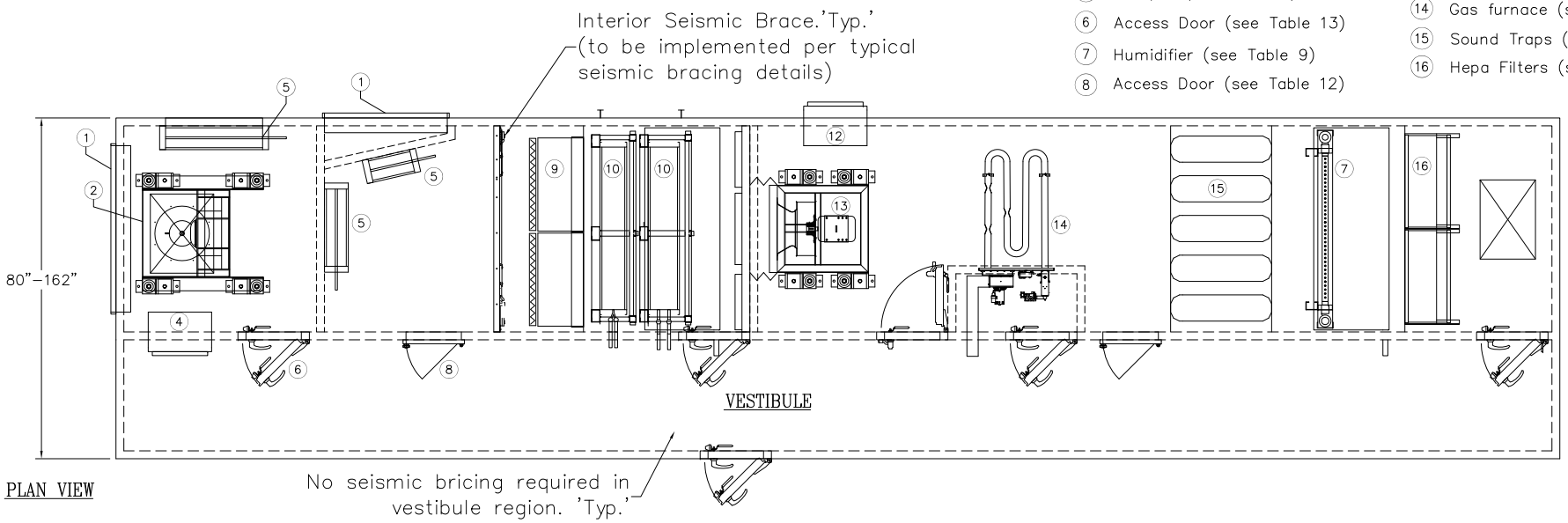

PLAN VIEW

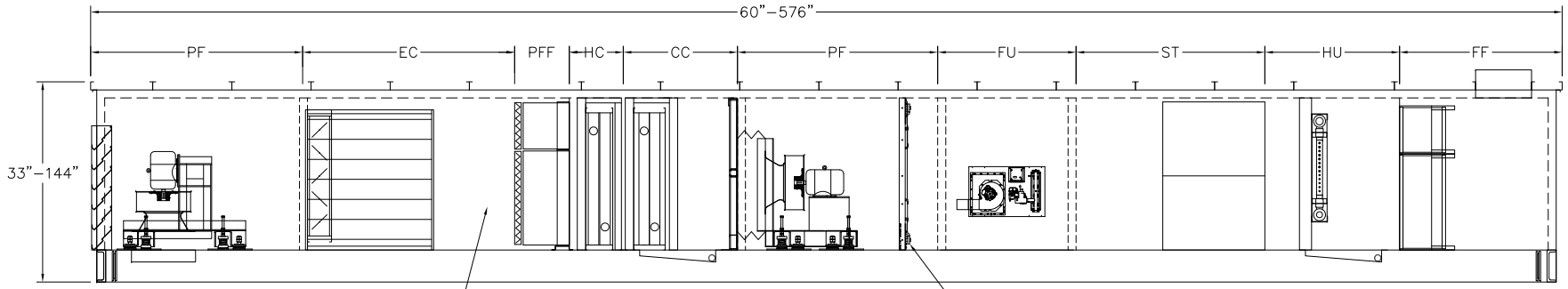

50% minimum of exterior wall surface to be solid wall or braced frame. Refer to typical seismic bracing detail for more information and general requirements.

Interior Seismic Brace.'Typ.'
(to be implemented per typical seismic bracing details)

SIDE VIEW

SECTIONS:

AB = Air Blender	MB = Mixing Box
CC = Cooling Coil	MS = Moisture Separator
CU = Condensing Unit	MZ = Multizone
DE = Direct Evaporative	PF = Plenum Fan
DF = DWDI Fan	PFF = Pre/Final Filter
DX = DX Coil	PL = Plenum
EC = Economizer	PR = Pre–Filter
FF = Final Filter	SC = Steam Coil
FU = Furnace	ST = Sound Trap
HC = Heating Coil	VF = Vee Filter
IE = Indirect Evaporative	

NOTES:

1. Wall insulation 2" and 4".
2. Cabinet Material: Galvanized Steel, Stainless Steel, Aluminum.
3. Stacked coils can be provided with or without coil rack using seismic details.
4. All dimensions are in inches unless otherwise specified.
5. Control panel could be in various locations on the unit.
6. Unit base heights 4" to 12"
7. Internal seismic braces to be implemented per the restrictions outlined on sheets "OSHPD Energy Labs Bracing" and "OSHPD Seismic Bracing Requirements".

NO.	DATE	REVISION	DWN	APP
1	9/14/11	NOTE #3 WAS CHANGED	JO	

PROJECT ENGINEER: LE 07/08/10
DESIGN ENGINEER: JO 07/08/10
DESCRIPTION: Single tunnel unit with vestibule
DRAWING NAME:
JOB NUMBER:

Energy Labs Inc
9651 AIRWAY RD. SUITE E
SAN DIEGO, CA 92154
(619) 671–0100

QTY:
CFM:
MODEL:

JOB NAME: *OSHPD –3 Single Tunnel Unit With Vestibule*
UNIT TAG: *AHU–3*

SINGLE TUNNEL UNIT WITH VESTIBULE AND SPLITS

1. Louver (see Table 4)
2. Fan (see Table 1 & 2)
4. Control Panel (see Table 16,17,18)
5. Damper (see Table 5)
6. Access Door (see Table 13)
7. Humidifier (see Table 9)
8. Access Door (see Table 12)
9. Pre & Final Filter (see Table 7)
10. Coils (see Table 6)
12. Control Panel (see Table 16,17,18)
13. Fan (see Table 1 & 2)
14. Gas furnace (see Table 3)
15. Sound Traps (see Table 11)
16. Hepa Filters (see Table 7)

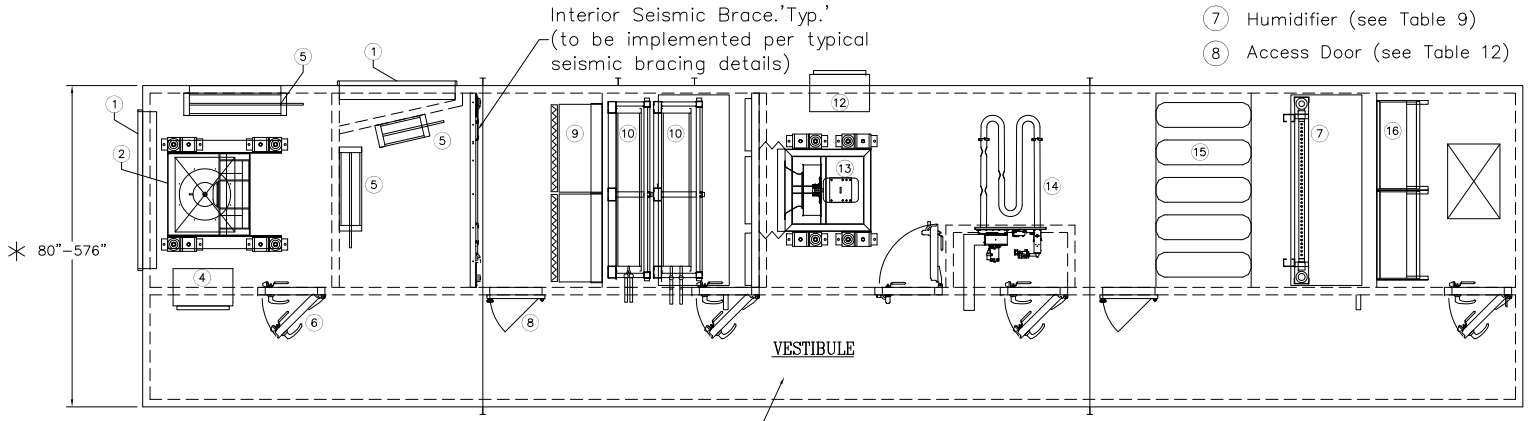

PLAN VIEW

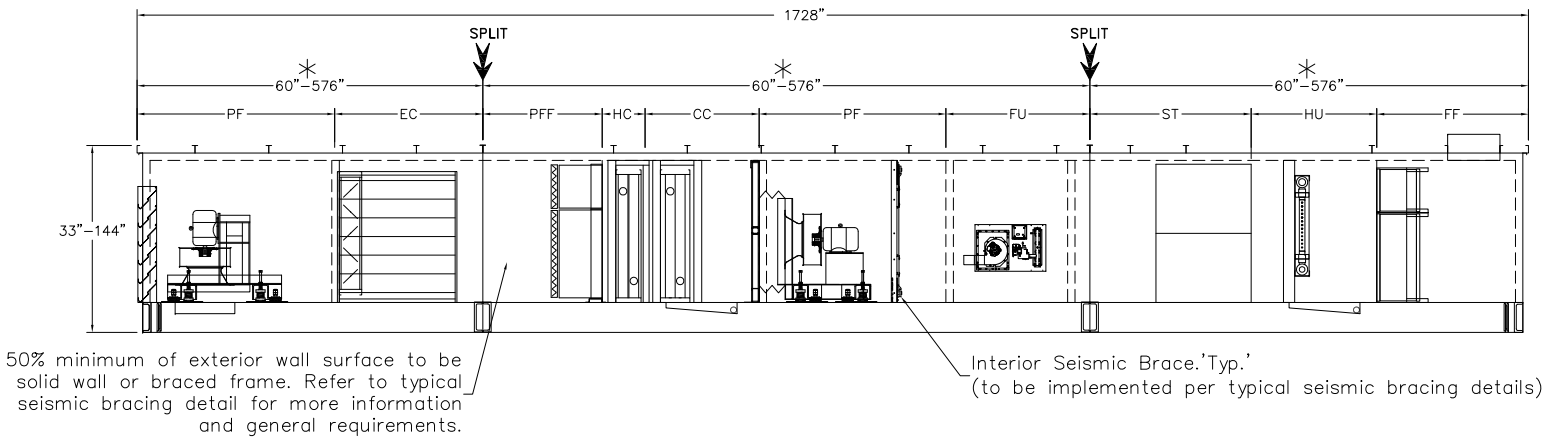

SIDE VIEW

NOTES:

1. Wall insulation 2" and 4".
2. Cabinet Material: Galvanized Steel, Stainless Steel, Aluminum.
3. Stacked coils can be provided with or without coil rack using seismic details.
4. All dimensions are in inches unless otherwise specified.
5. Control panel could be in various locations on the unit.
6. Unit base heights 4" to 12"
7. * Split section dimensions will be defined by shipping restrictions.
8. Internal seismic braces to be implemented per the restrictions outlined on sheets "OSHPD Energy Labs Bracing" and "OSHPD Seismic Bracing Requirements".

SECTIONS:

AB = Air Blender	MB = Mixing Box
CC = Cooling Coil	MS = Moisture Separator
CU = Condensing Unit	MZ = Multizone
DE = Direct Evaporative	PF = Plenum Fan
DF = DWDI Fan	PFF = Pre/Final Filter
DX = DX Coil	PL = Plenum
EC = Economizer	PR = Pre–Filter
FF = Final Filter	SC = Steam Coil
FU = Furnace	ST = Sound Trap
HC = Heating Coil	VF = Vee Filter
IE = Indirect Evaporative	

* SHIPPING RESTRICTIONS

	CABINET DIMENSIONS		
	LENGTH	HEIGHT	WIDTH
Max.	576	168	162

NO.	DATE	REVISION	DWN	APP
1	9/14/11	NOTE #3 WAS CHANGED	JO	

PROJECT ENGINEER: LE 07/08/10
DESIGN ENGINEER: JO 07/08/10
DESCRIPTION: Single tunnel unit with vest and splits
DRAWING NAME:
JOB NUMBER:

Energy Labs Inc
9651 AIRWAY RD. SUITE E
SAN DIEGO, CA 92154
(619) 671–0100

QTY:
CFM:
MODEL:

JOB NAME: *OSHPD –4*
Single Tunnel Unit With Vest. and splits
UNIT TAG: *AHU–4*

DOUBLE TUNNEL UNIT WITH SPLITS

1. Louver (see Table 4)
2. Fan (see Table 1 & 2)
4. Control Panel (see Table 16,17,18)
5. Damper (see Table 5)
6. Access Door (see Table 13)
7. Humidifier (see Table 9)
8. Access Door (see Table 12)
9. Pre & Final Filter (see Table 7)
10. Coils (see Table 6)
12. Control Panel (see Table 16,17,18)
13. Fan (see Table 1 & 2)
14. Gas furnace (see Table 3)
15. Sound Traps (see Table 11)
16. Hepa Filters (see Table 7)

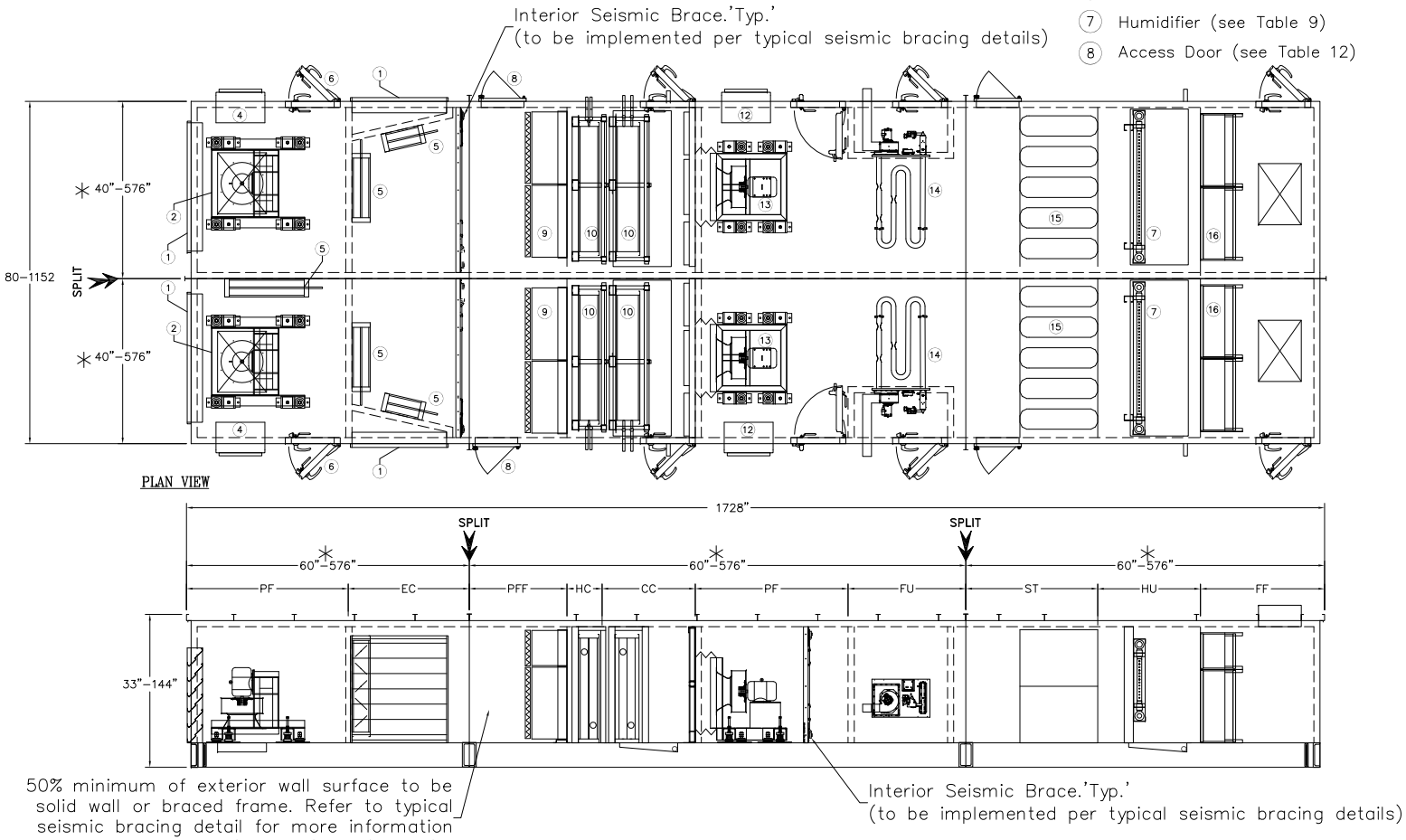

SECTIONS:

AB = Air Blender	MB = Mixing Box
CC = Cooling Coil	MS = Moisture Separator
CU = Condensing Unit	MZ = Multizone
DE = Direct Evaporative	PF = Plenum Fan
DF = DWDI Fan	PFF = Pre/Final Filter
DX = DX Coil	PL = Plenum
EC = Economizer	PR = Pre–Filter
FF = Final Filter	SC = Steam Coil
FU = Furnace	ST = Sound Trap
HC = Heating Coil	VF = Vee Filter
IE = Indirect Evaporative	

* SHIPPING RESTRICTIONS

	CABINET DIMENSIONS		
	LENGTH	HEIGHT	WIDTH
Max.	576	168	162

NOTES:

1. Wall insulation 2" and 4".
2. Cabinet Material: Galvanized Steel, Stainless Steel, Aluminum.
3. Stacked coils can be provided with or without coil rack using seismic details.
4. All dimensions are in inches unless otherwise specified.
5. Control panel could be in various locations on the unit.
6. Unit base heights 4" to 12"
*7. Split section dimensions will be defined by shipping restrictions.
8. Internal seismic braces to be implemented per the restrictions outlined on sheets "OSHPD Energy Labs Bracing" and "OSHPD Seismic Bracing Requirements".

NO.	DATE	REVISION	DWN	APP
1	9/14/11	NOTE #3 WAS CHANGED	JO	

PROJECT ENGINEER: LE 07/08/10
DESIGN ENGINEER: JO 07/08/10
DESCRIPTION: Double tunnel unit with splits
DRAWING NAME:
JOB NUMBER:

Energy Labs Inc
9651 AIRWAY RD. SUITE E
SAN DIEGO, CA 92154
(619) 671–0100

QTY:
CFM:
MODEL:

JOB NAME: *OSHPD–5 Double Tunnel Unit With Splits*
UNIT TAG: *AHU–5*

1. Louver (see Table 4)
2. Fan (see Table 1 & 2)
4. Control Panel (see Table 16,17,18)
5. Damper (see Table 5)
6. Access Door (see Table 13)
7. Humidifier (see Table 9)
8. Access Door (see Table 12)
9. Pre & Final Filter (see Table 7)
10. Coils (see Table 6)
12. Control Panel (see Table 16,17,18)
13. Fan (see Table 1 & 2)
14. Gas furnace (see Table 3)
15. Sound Traps (see Table 11)
16. Hepa Filters (see Table 7)

DOUBLE TUNNEL UNIT WITH VESTIBULE IN THE MIDDLE

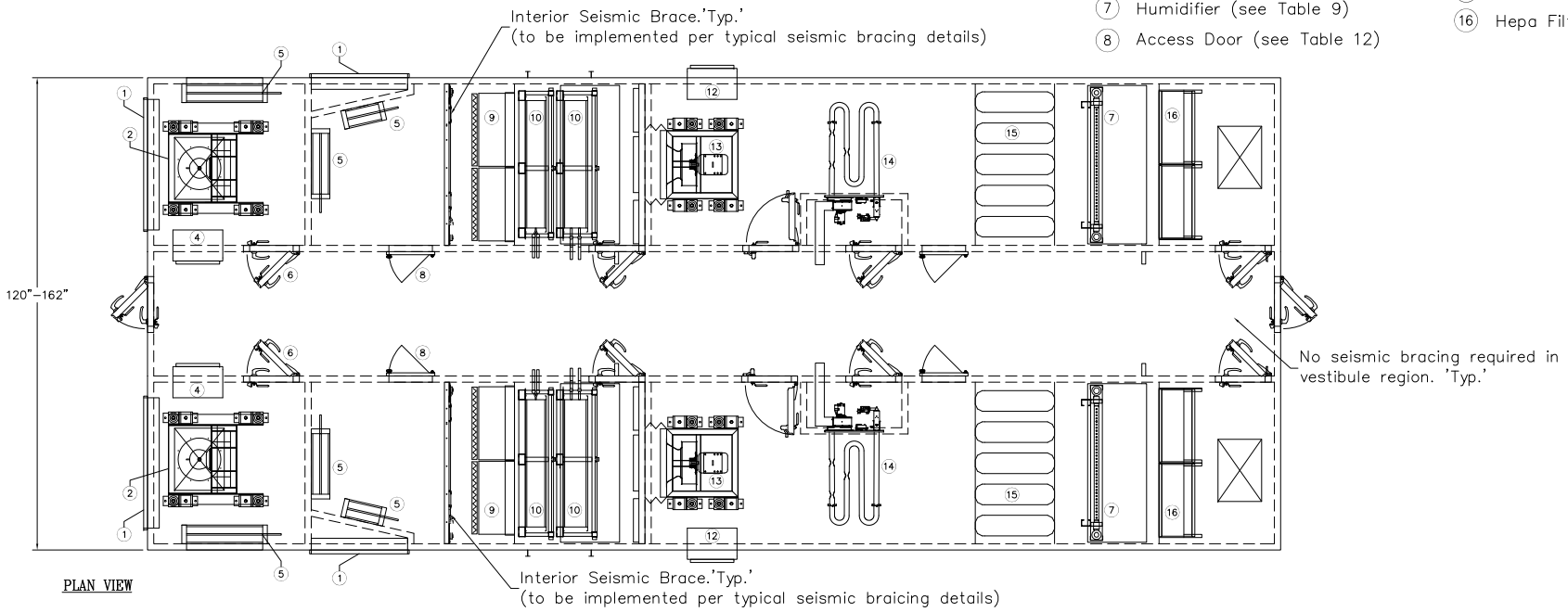

PLAN VIEW

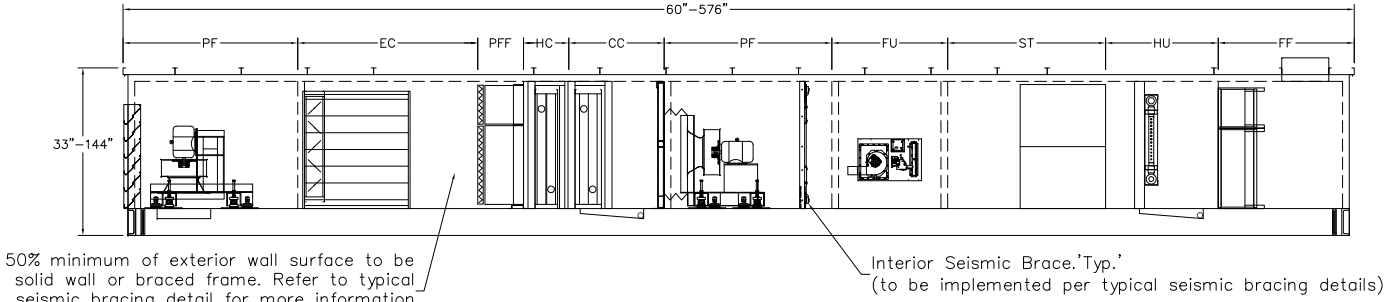

SIDE VIEW

SECTIONS:

AB = Air Blender	MB = Mixing Box
CC = Cooling Coil	MS = Moisture Separator
CU = Condensing Unit	MZ = Multizone
DE = Direct Evaporative	PF = Plenum Fan
DF = DWDI Fan	PFF = Pre/Final Filter
DX = DX Coil	PL = Plenum
EC = Economizer	PR = Pre–Filter
FF = Final Filter	SC = Steam Coil
FU = Furnace	ST = Sound Trap
HC = Heating Coil	VF = Vee Filter
IE = Indirect Evaporative	

NOTES:

1. Wall insulation 2" and 4".
2. Cabinet Material: Galvanized Steel, Stainless Steel, Aluminum.
3. Stacked coils can be provided with or without coil rack using seismic details.
4. All dimensions are in inches unless otherwise specified.
5. Control panel could be in various locations on the unit.
6. Unit base heights 4" to 12"
7. Internal seismic braces to be implemented per the restrictions outlined on sheets "OSHPD Energy Labs Bracing" and "OSHPD Seismic Bracing Requirements".

NO.	DATE	REVISION	DWN	APP
1	9/14/11	NOTE #3 WAS CHANGED	JO	

PROJECT ENGINEER: LE	07/08/10	
DESIGN ENGINEER: JO	07/08/10	
DESCRIPTION: Single tunnel unit with vest. in the middle		
DRAWING NAME:		
JOB NUMBER:		

Energy Labs Inc
9651 AIRWAY RD. SUITE E
SAN DIEGO, CA 92154
(619) 671–0100

QTY:
CFM:
MODEL:

JOB NAME: *OSHPD–6*
Double Tunnel Unit With Vest. in the Middle
UNIT TAG: *AHU–6*

DOUBLE TUNNEL UNIT WITH VESTIBULE IN THE MIDDLE

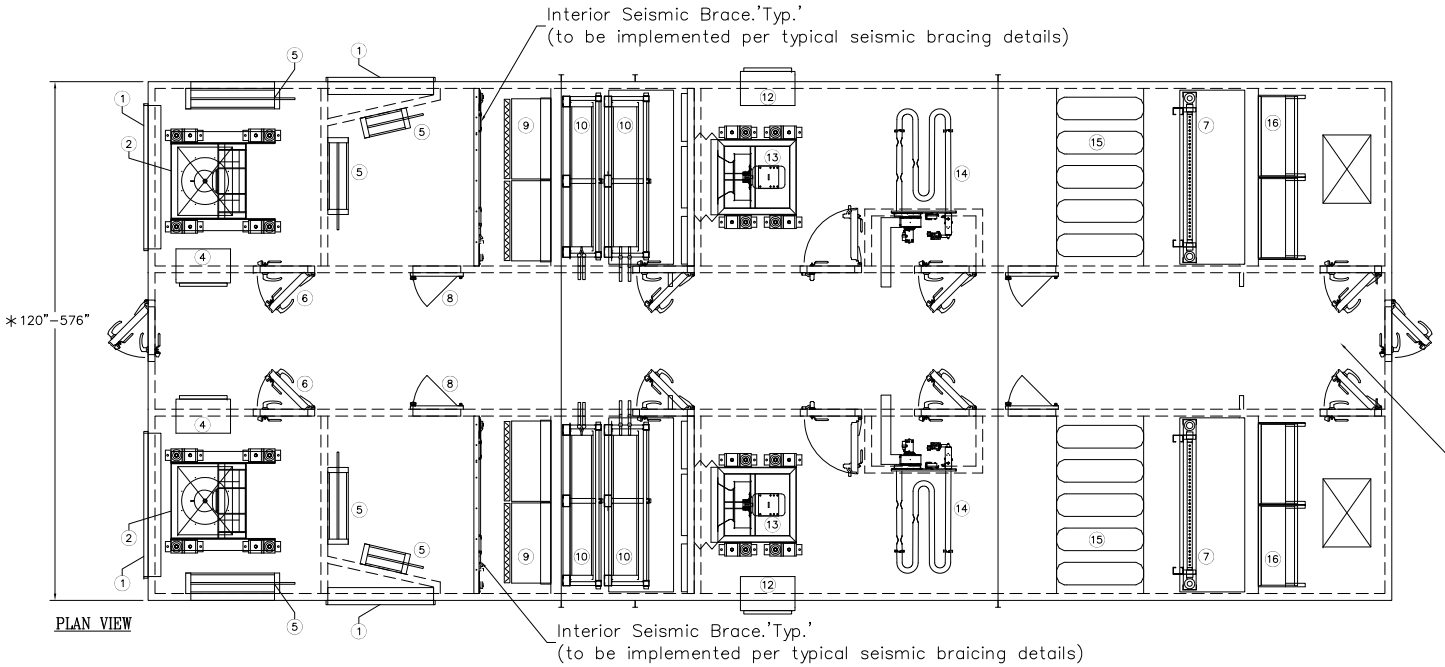

PLAN VIEW

1. Louver (see Table 4)
2. Fan (see Table 1 & 2)
4. Control Panel (see Table 16,17,18)
5. Damper (see Table 5)
6. Access Door (see Table 13)
7. Humidifier (see Table 9)
8. Access Door (see Table 12)
9. Pre & Final Filter (see Table 7)
10. Coils (see Table 6)
12. Control Panel (see Table 16,17,18)
13. Fan (see Table 1 & 2)
14. Gas furnace (see Table 3)
15. Sound Traps (see Table 11)
16. Hepa Filters (see Table 7)

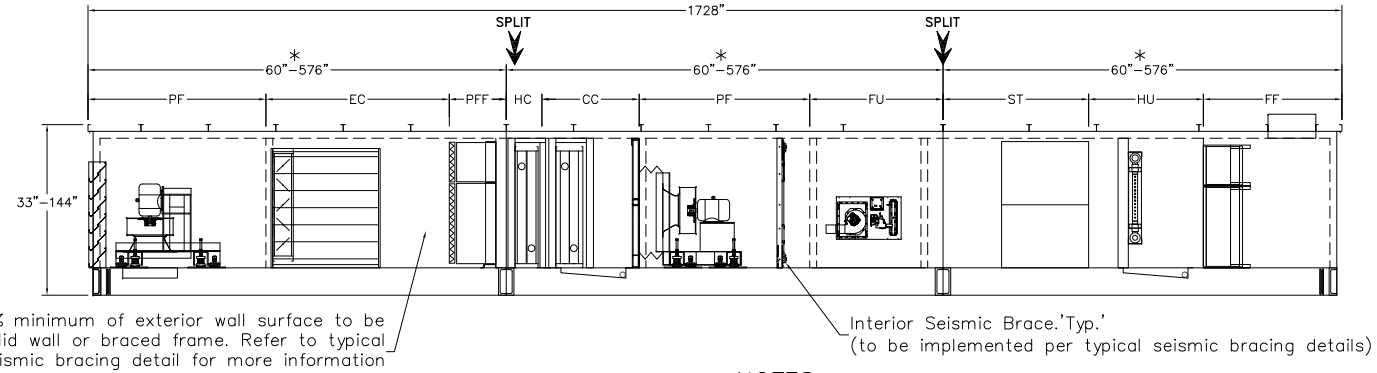

SIDE VIEW

SECTIONS:

AB = Air Blender	MB = Mixing Box
CC = Cooling Coil	MS = Moisture Separator
CU = Condensing Unit	MZ = Multizone
DE = Direct Evaporative	PF = Plenum Fan
DF = DWDI Fan	PFF = Pre/Final Filter
DX = DX Coil	PL = Plenum
EC = Economizer	PR = Pre–Filter
FF = Final Filter	SC = Steam Coil
FU = Furnace	ST = Sound Trap
HC = Heating Coil	VF = Vee Filter
IE = Indirect Evaporative	

* SHIPPING RESTRICTIONS

	CABINET DIMENSIONS		
	LENGTH	HEIGHT	WIDTH
Max.	576	168	162

NOTES:

1. Wall insulation 2" and 4".
2. Cabinet Material: Galvanized Steel, Stainless Steel, Aluminum.
3. Stacked coils can be provided with or without coil rack using seismic details.
4. All dimensions are in inches unless otherwise specified.
5. Control panel could be in various locations on the unit.
6. Unit base heights 4" to 12"
*7. Split section dimensions will be defined by shipping restrictions.
8. Internal seismic braces to be implemented per the restrictions outlined on sheets "OSHPD Energy Labs Bracing" and "OSHPD Seismic Bracing Requirements".

NO.	DATE	REVISION	DWN	APP
1	9/14/11	NOTE #3 WAS CHANGED	JO	

PROJECT ENGINEER: LE 07/08/10
DESIGN ENGINEER: JO 07/08/10
DESCRIPTION: Single tunnel unit with vest in the middle and splits
DRAWING NAME:
JOB NUMBER:

Energy Labs Inc
9651 AIRWAY RD. SUITE E
SAN DIEGO, CA 92154
(619) 671–0100

QTY:
CFM:
MODEL:

JOB NAME: OSHPD–7
Double Tunnel Unit With Vest. in the Middle and Splits
UNIT TAG: AHU–7

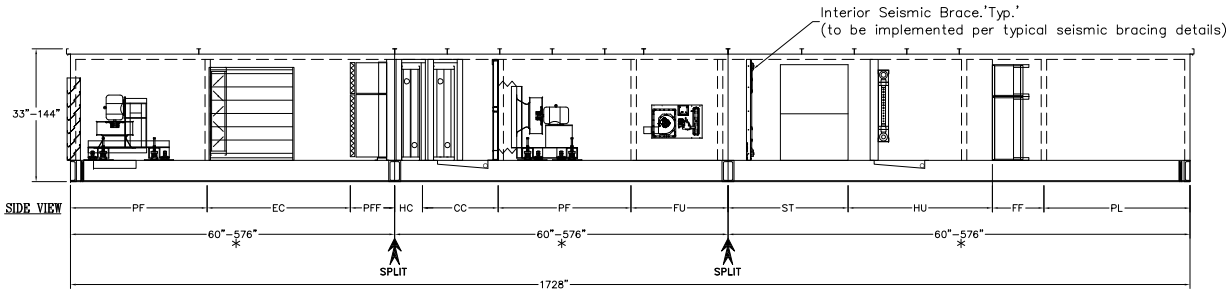

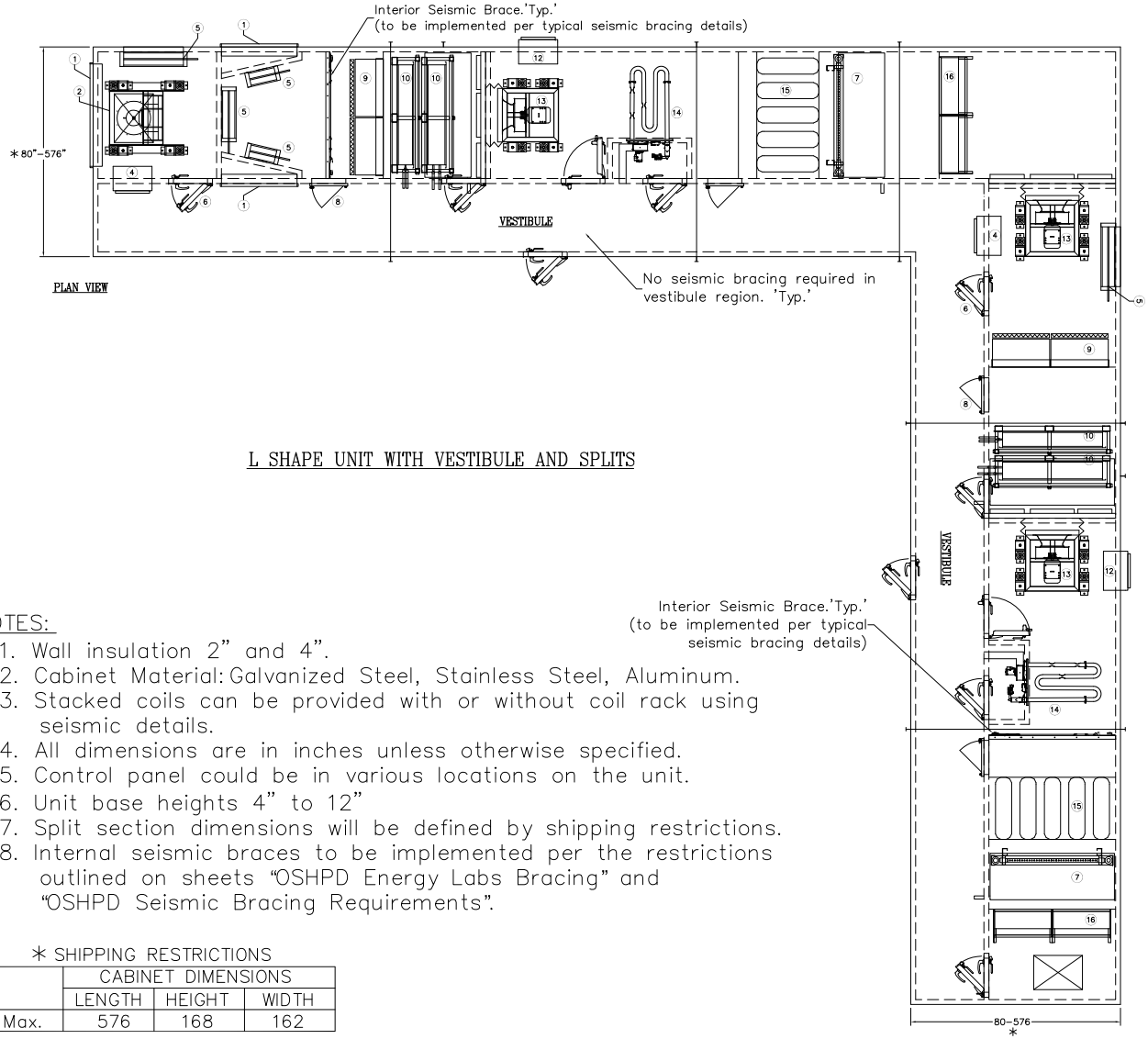

L SHAPE UNIT WITH VESTIBULE AND SPLITS

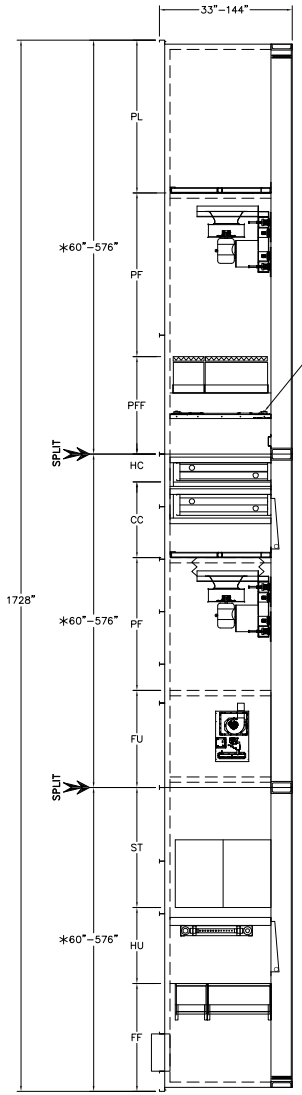

1. Louver (see Table 4)
2. Fan (see Table 1 & 2)
4. Control Panel (see Table 16,17,18)
5. Damper (see Table 5)
6. Access Door (see Table 13)
7. Humidifier (see Table 9)
8. Access Door (see Table 12)
9. Pre & Final Filter (see Table 7)
10. Coils (see Table 6)
12. Control Panel (see Table 16,17,18)
13. Fan (see Table 1 & 2)
14. Gas furnace (see Table 3)
15. Sound Traps (see Table 11)
16. Hepa Filters (see Table 7)

NOTES:

1. Wall insulation 2" and 4".
2. Cabinet Material: Galvanized Steel, Stainless Steel, Aluminum.
3. Stacked coils can be provided with or without coil rack using seismic details.
4. All dimensions are in inches unless otherwise specified.
5. Control panel could be in various locations on the unit.
6. Unit base heights 4" to 12"

*7. Split section dimensions will be defined by shipping restrictions.

8. Internal seismic braces to be implemented per the restrictions outlined on sheets "OSHPD Energy Labs Bracing" and "OSHPD Seismic Bracing Requirements".

* SHIPPING RESTRICTIONS

	CABINET DIMENSIONS		
	LENGTH	HEIGHT	WIDTH
Max.	576	168	162

SECTIONS:

AB = Air Blender
CC = Cooling Coil
CU = Condensing Unit
DE = Direct Evaporative
DF = DWDI Fan
DX = DX Coil
EC = Economizer
FF = Final Filter
FU = Furnace
HC = Heating Coil
IE = Indirect Evaporative
MB = Mixing Box
MS = Moisture Separator
MZ = Multizone
PF = Plenum Fan
PFF = Pre/Final Filter
PL = Plenum
PR = Pre–Filter
SC = Steam Coil
ST = Sound Trap
VF = Vee Filter

NO.	DATE	REVISION	DWN	APP
1	9/14/11	NOTE #3 WAS CHANGED	JO	

PROJECT ENGINEER: LE 07/08/10
DESIGN ENGINEER: JO 07/08/10
DESCRIPTION: L Shape unit with vestibule and splits
DRAWING NAME:
JOB NUMBER:

Energy Labs Inc
9651 AIRWAY RD. SUITE E
SAN DIEGO, CA 92154
(619) 671–0100

QTY:
CFM:
MODEL:

JOB NAME: OSHPD–8
L Shape With Vestibule and Splits
UNIT TAG: AHU–8

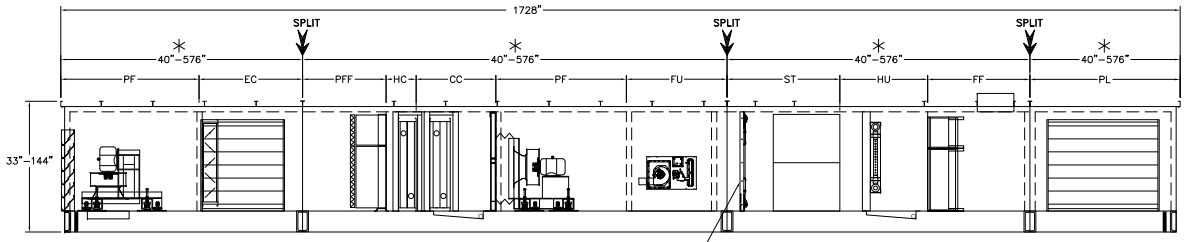

SIDE VIEW

Interior Seismic Brace.'Typ.'
(to be implemented per typical seismic bracing details)

1. Louver (see Table 4)
2. Fan (see Table 1 & 2)
4. Control Panel (see Table 16,17,18)
5. Damper (see Table 5)
6. Access Door (see Table 13)
7. Humidifier (see Table 9)
8. Access Door (see Table 12)
9. Pre & Final Filter (see Table 7)
10. Coils (see Table 6)
12. Control Panel (see Table 16,17,18)
13. Fan (see Table 1 & 2)
14. Gas furnace (see Table 3)
15. Sound Traps (see Table 11)
16. Hepa Filters (see Table 7)

T SHAPE UNIT WITH SPLITS

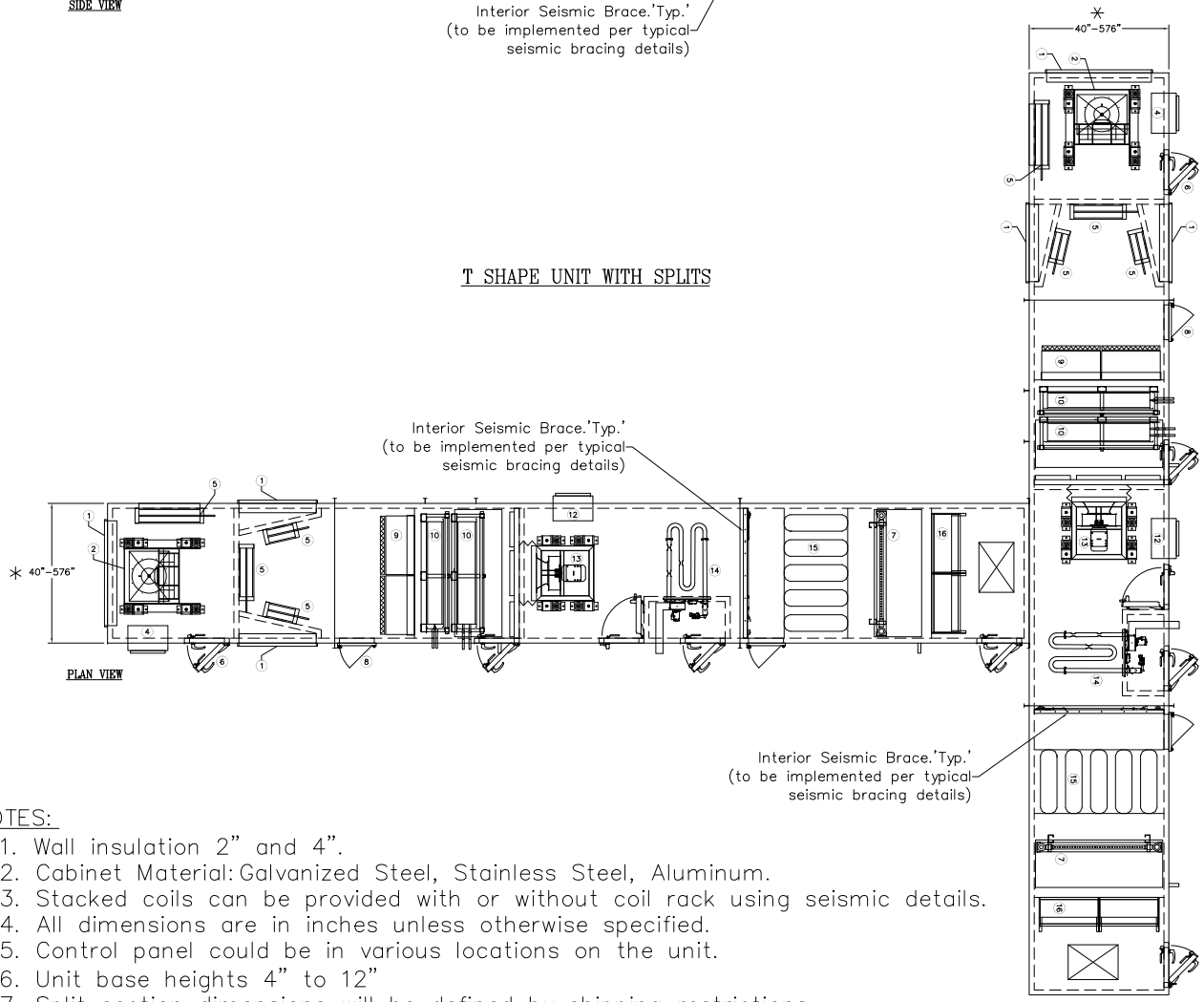

PLAN VIEW

Interior Seismic Brace.'Typ.'
(to be implemented per typical seismic bracing details)

Interior Seismic Brace.'Typ.'
(to be implemented per typical seismic bracing details)

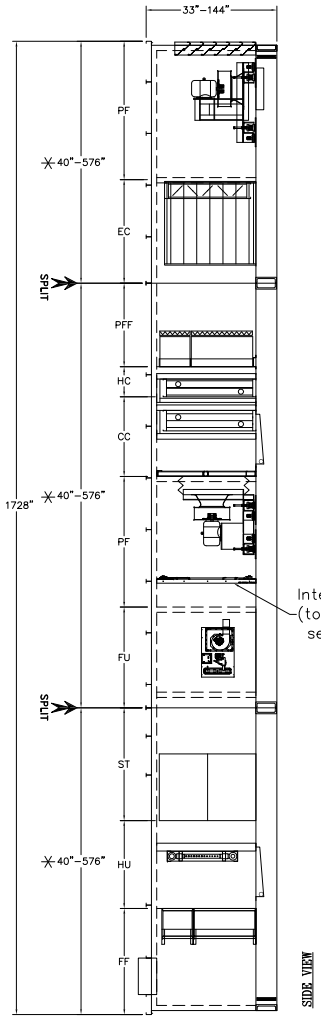

SIDE VIEW

Interior Seismic Brace.'Typ.'
(to be implemented per typical seismic bracing details)

NOTES:

1. Wall insulation 2" and 4".
2. Cabinet Material: Galvanized Steel, Stainless Steel, Aluminum.
3. Stacked coils can be provided with or without coil rack using seismic details.
4. All dimensions are in inches unless otherwise specified.
5. Control panel could be in various locations on the unit.
6. Unit base heights 4" to 12"
7. ∗ Split section dimensions will be defined by shipping restrictions.
8. Internal seismic braces to be implemented per the restrictions outlined on sheets "OSHPD Energy Labs Bracing" and "OSHPD Seismic Bracing Requirements".

∗ SHIPPING RESTRICTIONS

	CABINET DIMENSIONS		
	LENGTH	HEIGHT	WIDTH
Max.	576	168	162

SECTIONS:

AB = Air Blender
CC = Cooling Coil
CU = Condensing Unit
DE = Direct Evaporative
DF = DWDI Fan
DX = DX Coil
EC = Economizer
FF = Final Filter
FU = Furnace
HC = Heating Coil
IE = Indirect Evaporative
MB = Mixing Box
MS = Moisture Separator
MZ = Multizone
PF = Plenum Fan
PFF = Pre/Final Filter
PL = Plenum
PR = Pre–Filter
SC = Steam Coil
ST = Sound Trap
VF = Vee Filter

NO.	DATE	REVISION	DWN	APP
1	9/14/11	NOTE #3 WAS CHANGED	JO	

PROJECT ENGINEER: LE 07/08/10
DESIGN ENGINEER: JO 07/08/10
DESCRIPTION: T Shape unit with splits
DRAWING NAME:
JOB NUMBER:

Energy Labs Inc
9651 AIRWAY RD. SUITE E
SAN DIEGO, CA 92154
(619) 671–0100

QTY:
CFM:
MODEL:

JOB NAME: OSHPD–9 T Shape with splits
UNIT TAG: AHU–9

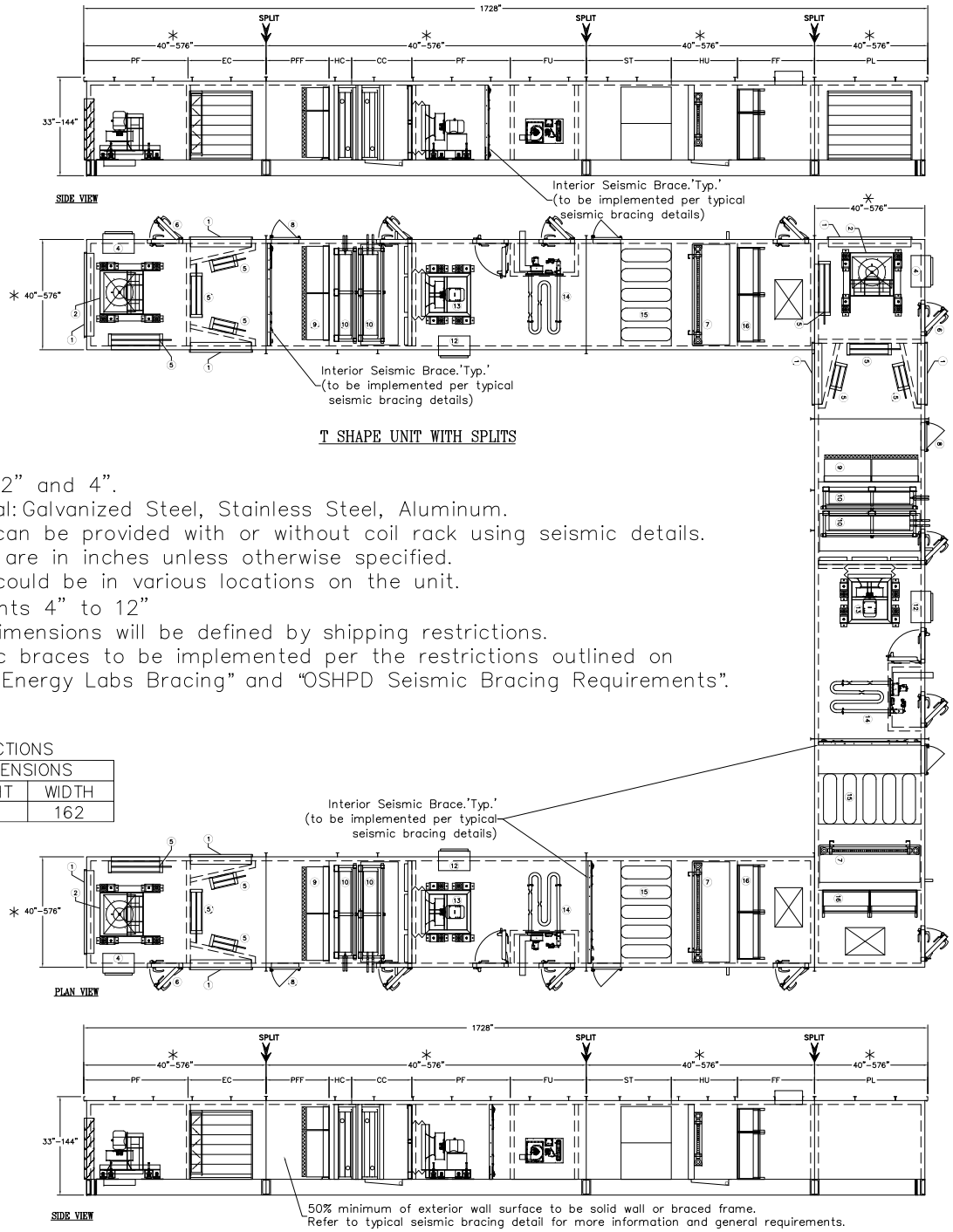

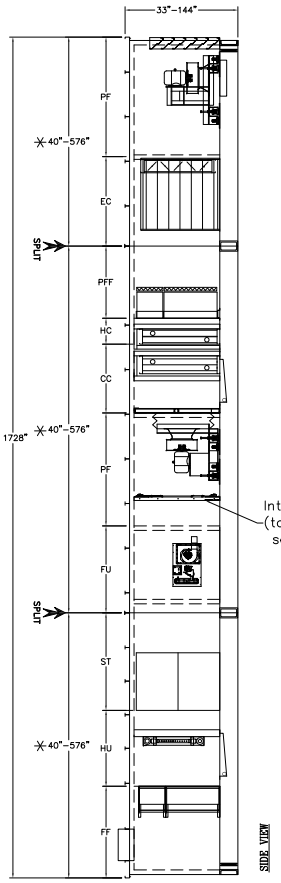

1. Louver (see Table 4)
2. Fan (see Table 1 & 2)
4. Control Panel (see Table 16,17,18)
5. Damper (see Table 5)
6. Access Door (see Table 13)
7. Humidifier (see Table 9)
8. Access Door (see Table 12)
9. Pre & Final Filter (see Table 7)
10. Coils (see Table 6)
12. Control Panel (see Table 16,17,18)
13. Fan (see Table 1 & 2)
14. Gas furnace (see Table 3)
15. Sound Traps (see Table 11)
16. Hepa Filters (see Table 7)

NOTES:

1. Wall insulation 2" and 4".
2. Cabinet Material: Galvanized Steel, Stainless Steel, Aluminum.
3. Stacked coils can be provided with or without coil rack using seismic details.
4. All dimensions are in inches unless otherwise specified.
5. Control panel could be in various locations on the unit.
6. Unit base heights 4" to 12"
*7. Split section dimensions will be defined by shipping restrictions.
8. Internal seismic braces to be implemented per the restrictions outlined on sheets "OSHPD Energy Labs Bracing" and "OSHPD Seismic Bracing Requirements".

* SHIPPING RESTRICTIONS

	CABINET DIMENSIONS		
	LENGTH	HEIGHT	WIDTH
Max.	576	168	162

SECTIONS:

AB = Air Blender
CC = Cooling Coil
CU = Condensing Unit
DE = Direct Evaporative
DF = DWDI Fan
DX = DX Coil
EC = Economizer
FF = Final Filter
FU = Furnace
HC = Heating Coil
IE = Indirect Evaporative
MB = Mixing Box
MS = Moisture Separator
MZ = Multizone
PF = Plenum Fan
PFF = Pre/Final Filter
PL = Plenum
PR = Pre–Filter
SC = Steam Coil
ST = Sound Trap
VF = Vee Filter

NO.	DATE	REVISION	DWN	APP
1	9/14/11	NOTE #3 WAS CHANGED	JO	

PROJECT ENGINEER: LE 07/08/10
DESIGN ENGINEER: JO 07/08/10
DESCRIPTION: U Shape unit with splits
DRAWING NAME:
JOB NUMBER:

Energy Labs Inc
9651 AIRWAY RD. SUITE E
SAN DIEGO, CA 92154
(619) 671–0100

QTY:
CFM:
MODEL:

JOB NAME: OSHPD–10 U Shape With Splits
UNIT TAG: AHU–10

LONGITUDINAL WALL BRACING SUMMARY:

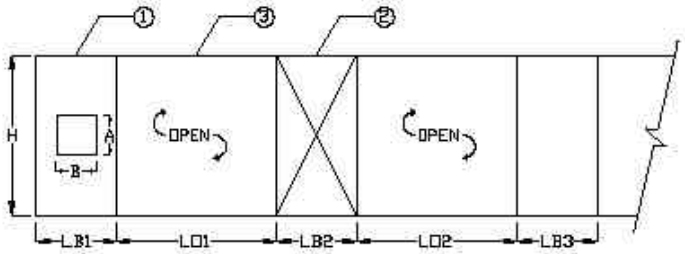

ELEVATION VIEW 1

SATISFACTORY BRACING REQUIREMENT:

LB ≥ H/2, IN ORDER TO BE CONSIDERED BRACED WALL LENGTH
LB1 + LB2 + … + LBN ≥ LO1 + LO2 + … + LON
A,B ≤ MIN(H/3,LB/3)

INTERIOR SEISMIC BRACING REQUIREMENTS

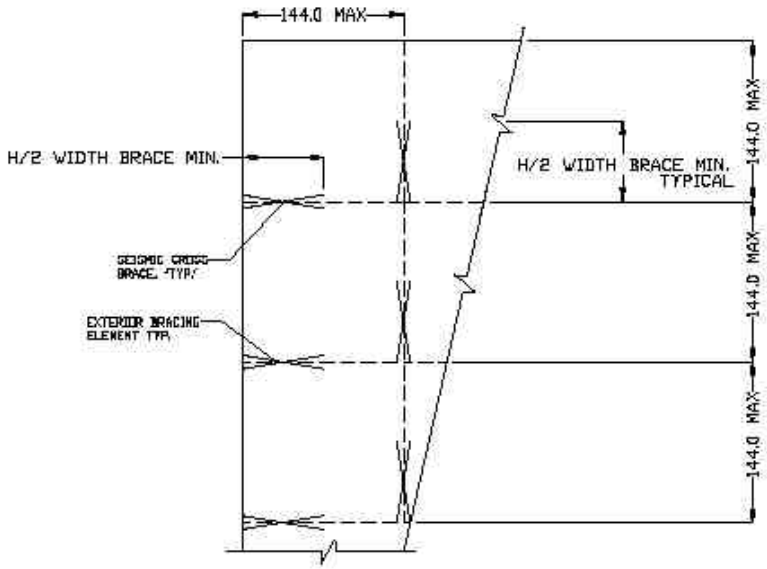

PLAN VIEW 2

NO.	DATE	REVISION	DWN	APP

PROJECT ENGINEER: LE 07/26/10
DESIGN ENGINEER: JO 07/26/10
DESCRIPTION:
DRAWING NAME:
JOB NUMBER:

Energy Labs Inc
9651 AIRWAY RD. SUITE E
SAN DIEGO, CA 92154
(619) 671-0100

QTY:
CFM:
MODEL:

JOB NAME: OSHPD Energy Labs Bracing
UNIT TAG:

A. Interior Bracing Requirements

1. Standard construction implementing the OSHPD unit specific construction method upgrades are qualified for a maximum spacing between parallel bracing elements of 12'-0". Both directions along a unit must be considered in the below bracing requirements.
2. If parallel bracing elements are spaced at a distance less than 12'-0", an intermediate bracing element is not required for this cell of the enclosure.
3. If parallel bracing panel elements are spaced at a distance more than 12'-0", an intermediate bracing element is required for this cell of the enclosure.
4. This intermediate bracing element can be implemented parallel to these existing bracing units spaced at greater than 12'-0" wherever it is desired as long as it is insured that the new maximum distance between parallel bracing units has been reduced to less than 12'-0".
5. A bracing element can be a wall or braced tension frame as outlined below.
6. If a wall is utilized as a bracing element, the following conditions must be met:
    a. Wall must be of typical panel construction, as detailed in the OSHPD approved drawing set.
    b. Height to width ratio of the wall must not exceed 2.0.
7. Small openings may be permitted, providing this opening has a maximum dimension of the lesser of one third of the height of the total bracing element and one third the width of the bracing element.
8. If a braced tension frame is utilized as a bracing element, the following conditions must be met:
    a. Braced tension frames must be detailed per OSHPD approved drawing set.
    b. Height to with ratio of the wall must not exceed 2.0.
9. Seismically upgraded coil racks qualify as a bracing element.
10. Seismically upgraded fan pressure walls qualify as a bracing element. Note that frame upgrade is necessary only when pressure wall is being used as a bracing element.
11. Total height of enclosure may not exceed 12'-0".

B. Interior Bracing Requirements

1. Exterior openings are defined to be at an exterior wall of the enclosure, created by the presence or louvers, vents, etc.
2. Exterior sections defined to be bracing elements must meet the conditions set forth in items 6 and 7 of Interior bracing requirements as set forth above.
3. Total length of bracing elements must be greater than or equal to length of exterior openings.
4. Total height of enclosure may not exceed 12'-0".

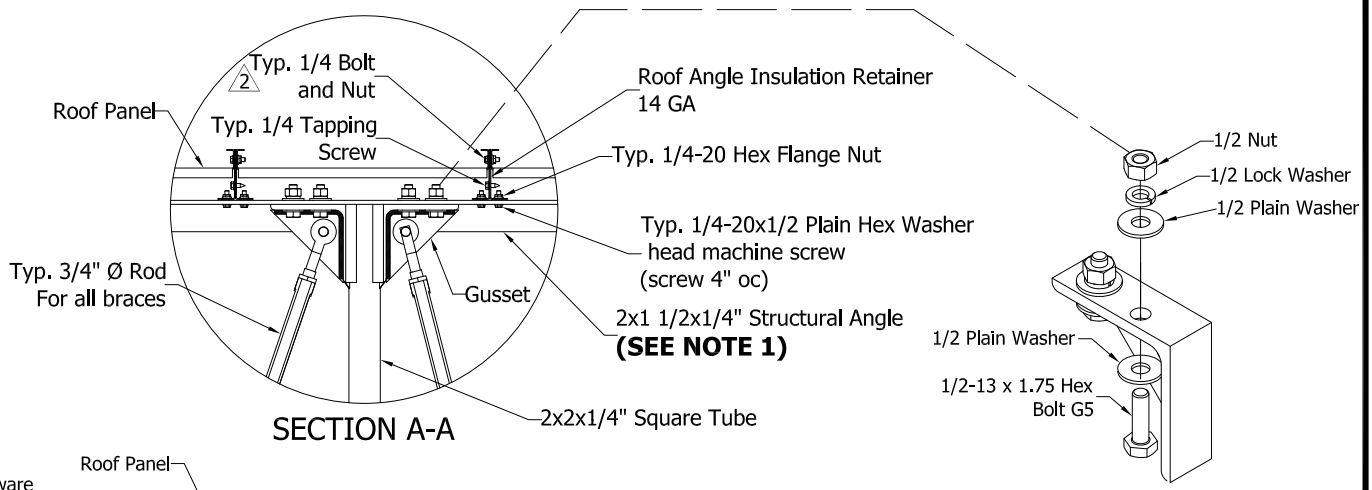

SECTION A-A

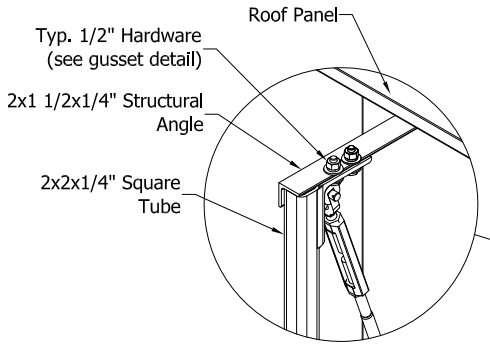

DETAIL C
SCALE 0.16 : 1

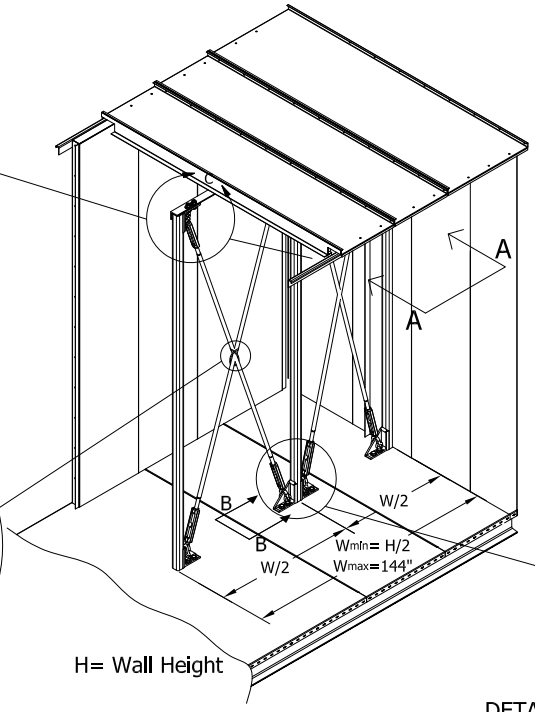

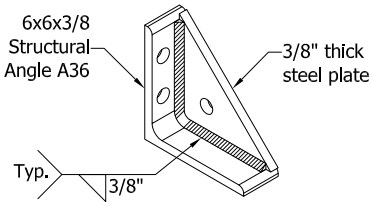

GUSSET
(Typ. top and bottom)

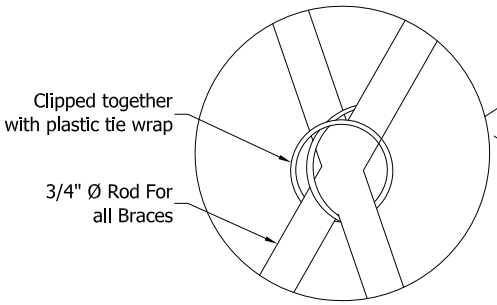

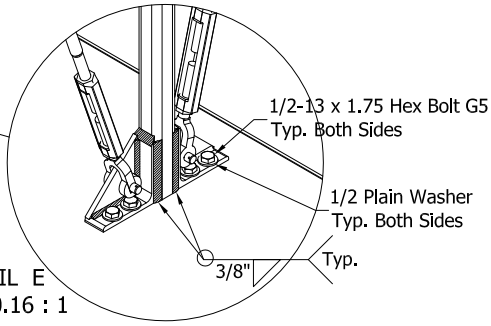

DETAIL E
SCALE 0.16 : 1

RESTRICTIONS:

1.- ROOF PANELS ARE TO BE A MAXIMUM OF 36" WIDE FOR OSHPD UNITS.
2.- INSULATION LINER RETENTION ANGLES MUST BE CONNECTED AT THE POINT OF INTERSECTION OF THE STRUCTURAL ANGLE.

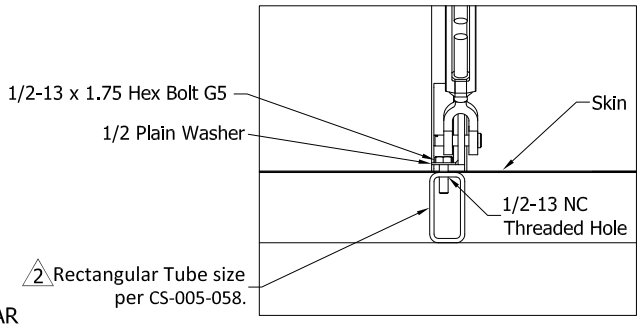

SECTION B-B

NOTES:

1.- EXTEND STRUCTURAL ANGLE ON EITHER SIDE AS REQUIRED TO CONNECT TO A TOTAL OF 4 ROOF ANGLE INSULATION RETAINER MINIMUM.
1.- USE METHOD SHOWING IN THIS STANDARD TO INSTALL PERPENDICULAR CROSS BRACING IN TO THE INTERNAL UNIT.
2.- FOR MORE INFORMATION AND GENERAL REQUIREMENTS, SEE STANDARD CS-081-004 AND CS-081-005.
3.- PAINT CROSS BRACING BEFORE TO INSTALL. USE THE STANDARD ELI UNITS COLOR.

Energy Labs Inc

THIS DRAWING IS THE PROPERTY OF ENERGY LABS INC. AND CAN NOT BE REPRODUCED IN WHOLE OR IN PART, OR DELIVERED TO OTHERS WITHOUT EXPRESS WRITTEN CONSENT OF ENERGY LABS INC.

NO.	DATE/FECHA	REVISION/REVISIÓN	DWN
2	11/19/10	Change note to correctly reflect 1/4" bolt.	JO
		Changed note from Square Tube to	
		Rectangular Tube size per CS-005-058.	
1	10/05/10	INITIAL RELEASE	DV

TITLE/TITULO:

INTERNAL CROSS BRACING INSTALLATION PERPENDICULAR CASE (OSHPD SEISMIC CERTIFICATION)

ENGINEERING CONSTRUCTION STANDARD

DRAWN BY/DIBUJADO POR:	ISSUED/LIBERADO:	DRAWING NO./NÚMERO DE DIBUJO:
J.ORTEGA	08/03/10	CS-081-002 2

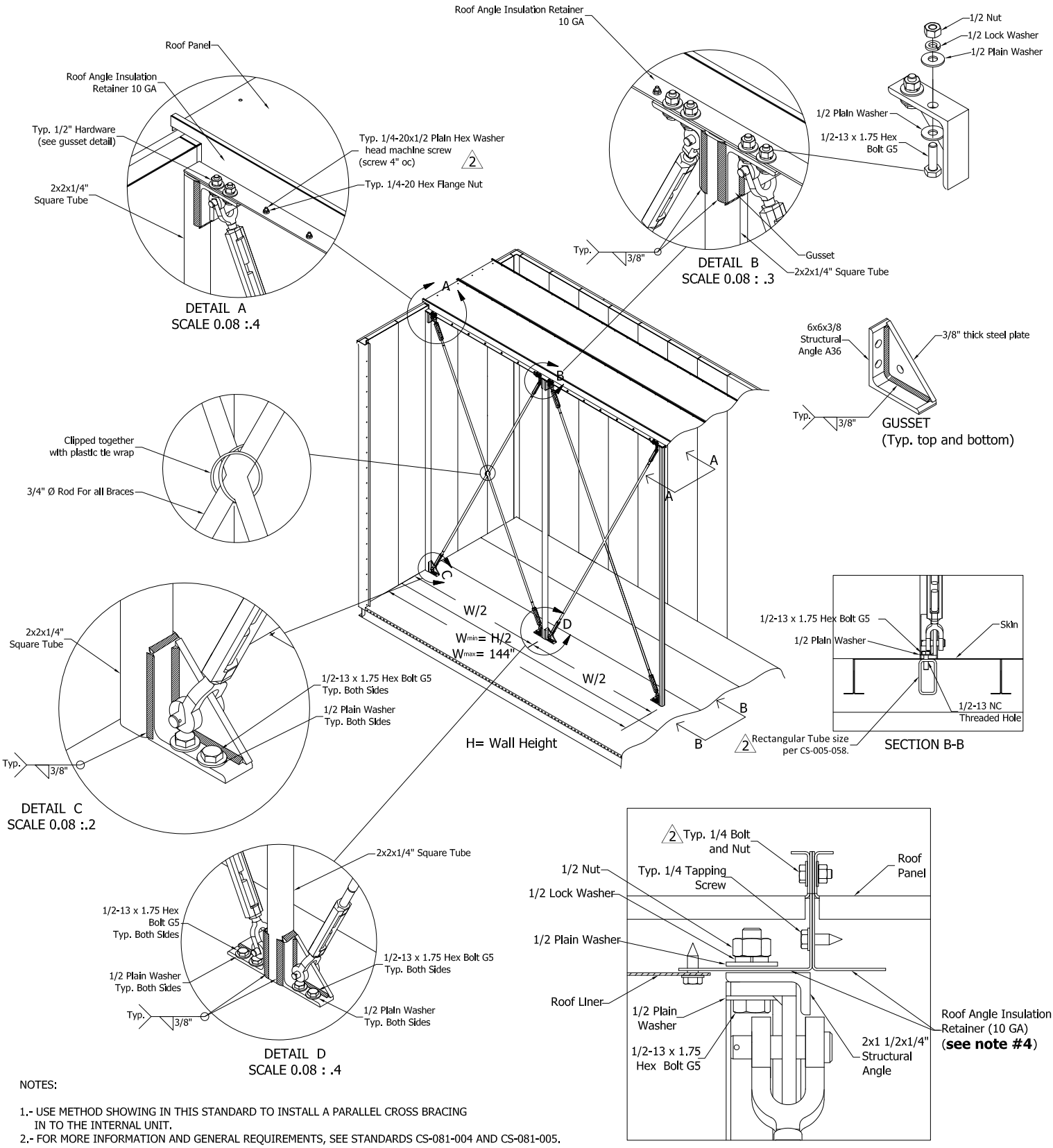

NOTES:

1.- USE METHOD SHOWING IN THIS STANDARD TO INSTALL A PARALLEL CROSS BRACING IN TO THE INTERNAL UNIT.
2.- FOR MORE INFORMATION AND GENERAL REQUIREMENTS, SEE STANDARDS CS-081-004 AND CS-081-005.
3.- PAINT CROSS BRACING BEFORE TO INSTALL. USE STANDARD ELI UNIT COLOR.
4.- FOR ROOF WITH SINGLE SLOPE, EXTEND ROOF ANGLE INSULATION RETAINER TO CONNECT TO 2x1 1/2x1/4 STRUCTURAL ANGLE.

Energy Labs Inc

THIS DRAWING IS THE PROPERTY OF ENERGY LABS INC. AND CAN NOT BE REPRODUCED IN WHOLE OR IN PART, OR DELIVERED TO OTHERS WITHOUT EXPRESS WRITTEN CONSENT OF ENERGY LABS INC.

NO.	DATE/FECHA	REVISION/REVISIÓN	DWN
2	11/19/10	Change note to correctly reflect 1/4" bolt.	JO
		Changed note from Square Tube to	
		Rectangular Tube size per CS-005-058.	
		Moved leader note for more clarity.	
1	10/05/10	INITIAL RELEASE	DV

TITLE/TITULO:

INTERNAL CROSS BRACING INSTALLATION PARALLEL CASE (OSHPD SEISMIC CERTIFICATION)

ENGINEERING CONSTRUCTION STANDARD

DRAWN BY/DIBUJADO POR:	ISSUED/LIBERADO:	DRAWING NO./NÚMERO DE DIBUJO:
J.ORTEGA	08/03/10	CS-081-003 2