oshpd
State of California – Health and Human Services Agency
Office of Statewide Health Planning and Development
Facilities Development Division www.oshpd.ca.gov/fdd
400 R Street. Suite 200, Sacramento, California 95811-6213 Phone (916) 440-8300 Fax (916) 654-2973

APPLICATION FOR PREAPPROVAL

SPECIAL SEISMIC CERTIFICATION OF EQUIPMENT AND COMPONENTS

For Office Use Only

APPLICATION NO.

OSP – 0168-10

Check whether application is: NEW [X] RENEWAL [ ]

1.0

The Trane Company — *Manufacturer*

Mr. Steve Lotspaih — *Manufacturer's Technical Representative*

3600 Pammel Creek Road, La Crosse, WI 54601 — *Mailing Address*

608-787-4100 — *Telephone*

slotspaih@trane.com — *E-mail Address*

2.0

EarthWise CenTraVac — *Product Name*

Water-Cooled Liquid Chillers — *Product Type*

See Attachments

Product model No (List all unique product identification numbers and/or serial numbers)

General Description: These are cataloged, low emission tube shell chillers available with single compressors from 170 to 2000 Ton cooling capacity. These base mounted units can be installed on thin neoprene Pads or Spring Isolators. Spring isolator installations require dunnage platforms above the isolation system. Anchorage and support are not pre-approved & UUT support details shown are for information only. Approval is limited to chillers, chiller mounted components, and AFD listed in the attachments.

3.0

The VMC Group — *Applicant Company Name*

John Wilson, Jr. — *Contact Person*

113 Main St, Bloomingdale NJ, 07403 — *Mailing Address*

973-838-1780 — *Telephone*

jwilson@thevmcgroup.com — *E-mail Address*

I hereby agree to reimburse the Office of Statewide Health Planning and Development for the actual costs incurred by the department for review.

Signature of Applicant

3/25/2011 — *Date*

CEO — *Title*

The VMC Group — *Company Name*

Registered Design Professional Preparing the Report

4.0

The VMC Group
Company Name

Samantha Kersting, SE | C-57001
Contact Name | *California License Number*

113 Main St, Bloomingdale, NJ 07403
Mailing Address

973-838-1780 | samantha.kersting@thevmcgroup.com
Telephone | *E-mail Address*

California Licensed Structural Engineer Review and Acceptance of the Report

5.0

The VMC Group
Company Name

Samantha Kersting, SE | S-4642
Contact Name | *California License Number*

113 Main St, Bloomingdale, NJ 07403
Mailing Address

973-838-1780 | samantha.kersting@thevmcgroup.com
Telephone | *E-mail Address*

Anchorage Pre-Approval

6.0

☐ *Anchorage is pre-approved under OPA-*
(Separate application for anchorage pre-approval is required)

☒ Anchorage is not Pre-approved

Certification Method

70. ☒ *Testing in accordance with:* ☒ *ICC-ES AC-156* ☐ *Other (Please Specify):*

☐ *Analysis*

☐ *Experience data*

☐ *Combination of Testing, Analysis, and/or Experience Data (Please Specify):*

Testing Laboratory (if applicable)

8.0

See Attached
Company Name | *Contact Name*

Mailing Address

Telephone | *E-mail:*

2/13

Approval Parameters

9.0

Design in accordance with ASCE 7-05 Chapter 13: ☒ Yes ☐ No

Design Basis of Equipment or Components (F_p/W_p) = 2.61g (for Spring Isolators) & 2.01g (for Neoprene Isolators)

S_{DS} (Spectral response acceleration at short period) = 1.16g

a_p (In-structure equipment or component amplification factor) = 2.5

R_p (Equipment or component response modification factor) = 2.0 (Spring Isolators) or 2.5 (Neoprene Isolators)

I_p (Importance factor) = 1.5

z/h (Height factor ratio)= 1.0

Equipment or Component fundamental period(s) = See Attachments

Building period limits (if any) =N/A Sec

Overall dimensions and weight (or range thereof) = See Attachments

Equipment or Components @ grade designed in accordance with ASCE 7-05 Chapter 15: ☐ Yes ☒ No

Design Basis of Equipment or Components (V/W) =

S_{DS} (Spectral response acceleration at short period) =

S_1 (Spectral response acceleration at 1 second period) =

R (Response modification coefficient)=1.0

Ω_0 (System overstrength factor) =1.0

C_d (Deflection amplification factor) =1.0

I_p (Importance factor) =1.5

Height to Center of Gravity above base =

Equipment or Component fundamental period(s) = Sec

Overall dimensions and weight (or range thereof) =

Tank(s) designed in accordance with ASME BPVC, 2007: ☐ Yes ☒ No

10.0 ***List of attachments supporting the special seismic certification of equipment or components:***

☒ *Test Report* ☒ *Drawings* ☒ *Manufacturer's Catalog*

☐ *Calculations* ☐ *Others (Please Specify):*

11.0 ***OSHPD Approval*** *(For Office Use Only)*

3/25/2011	**December 31, 2016**
Signature & Date	*Approval Expiration Date*
Chris Tokas, SHFR	S_{DS} (g) = **1.16** z/h = **1.0**
Name & Title	*Special Seismic Certification Valid Up to*

Condition of Approval (if any): **Approval is limited to equipment and components listed in Page # 13 only.**

Test Labs for CenTraVac OSP Application

UUT 1A, 1B, 2A, 2B:

UCSD
Dep't of Structural Engineering
La Jolla, CA 92093
Gianmario Benzoni
gbenzoni@ucsd.edu

UUT 3

UC Berkeley
1301 South 46th St
Richmond CA 94804
Don Clyde
dclyde@berkeley.edu

UUT 4

Environmental Testing Laboratory
11034 Indian Trail
Dallas, TX 75229
Brady Richard
brady@etldallas.com

4/13

CenTraVac Chart: OSP Included Components and Tested Units
3/25/2011

Summary of Tested Components

UUT	Description	Mounting	L	W	H	Wt	Tonnage	Lowest Fn (F-B)	Lowest Fn (S-S)	Lowest Fn (Vert, Z)
1A	CenTraVac 1470T	Hard Mounted	274	158	142	69234	1470	11.43	8.17	20.26
1B	CenTraVac 1470T	Isolated						2.89	2.41	5.06
2A	CenTraVac 320T	Hard Mounted	154	93	94	14371	300	19.09	11.75	11.57
2B	CenTraVac 320T	Isolated						2.28	1.34	3.97
3	CenTraVac 320T	Hard Mounted						8.59	5.37	8.59
4	Danfoss AFD	Hard Mounted	60	30	70	1520	N/A	10.8	3.9	3.3

Hard Mounted installations included 3/8" Shear-Flex pads underneath ends of chiller

Major Components of Tested Units

UUT	Description	Evap Shell	Condenser Shell	Marine Box	Compressor	AFD	Starter	Control Panel	Referenced Drawings	Isolators (Qty)
1	CenTraVac 1470T	Extended	Long	Yes	Trane	Rockwell	None	Trane	VMA-46420-1A,B	M6SH-1E (10)
2, 3	CenTraVac 320T	Short	Short	No	Trane	None	Trane	Trane	VMA-46420-2A,B	M2SSH-1E (4)

THE VMC GROUP
The Power of Together™

5/13

REV.	DESCRIPTION	DATE	BY

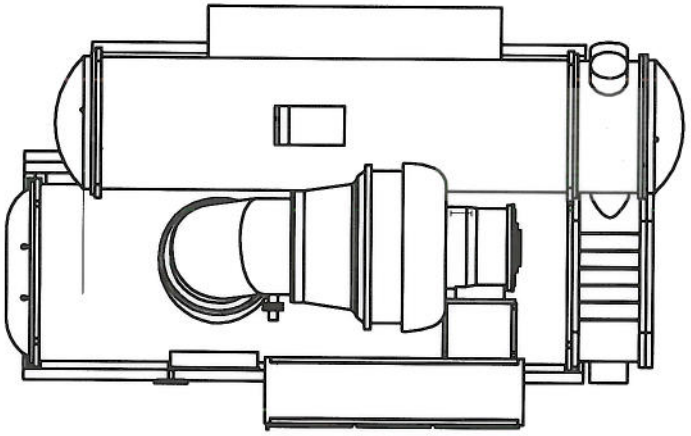

PLAN VIEW

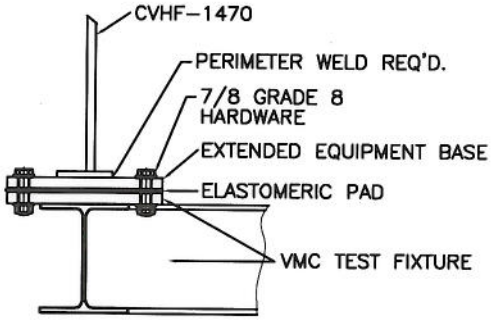

DETAIL "A"

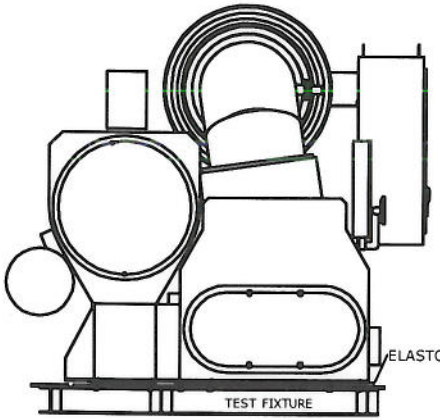

LEFT VIEW

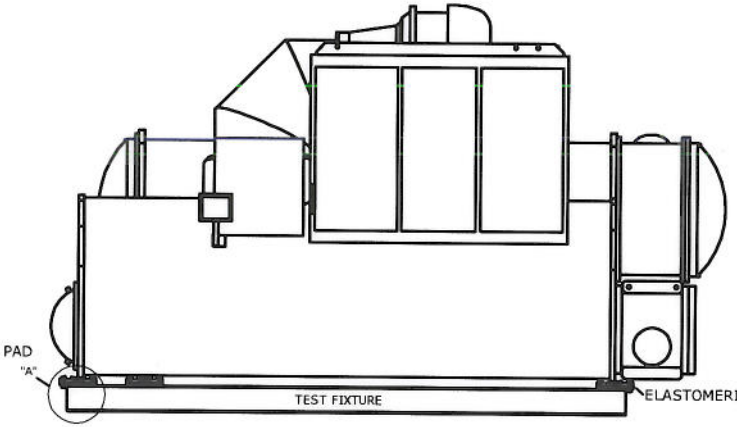

FRONT VIEW

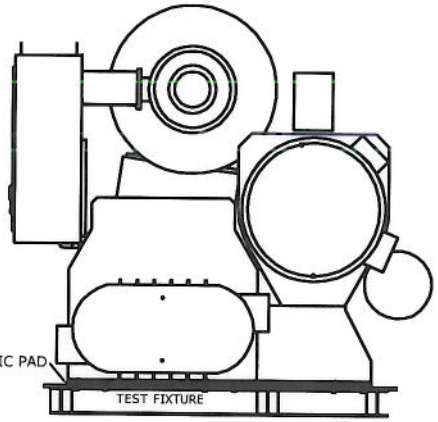

RIGHT SIDE VIEW

OTHER MATERIALS, COMPOUNDS, OR FINISHES WITH EQUAL OR SUPERIOR PROPERTIES MAY BE SUBSTITUTED AS THEY BECOME AVAILABLE.

CERTIFIED FOR: TRANE

JOB NAME: _____

CUSTOMER : _____

CUSTOMER P.O.: _____

SALES ORDER: _____

TRANE CENTRA-VAC
TEST FIXTURE LAYOUT
UUT 1A CVHF-1470 (1500T)
ELASTOMERIC PAD

THE VMC GROUP
The Power of Together
Bloomingdale, NJ 07403
Houston, TX 77041

SCALE: NONE

SHEET: 1

Member VISEMA

DRAWING NO.: VMA-46420-1A

REVISION: A

PROPRIETARY: EXCEPT AS OTHERWISE AGREED IN WRITING, THE INFORMATION AND DESIGN DISCLOSED HEREIN ARE THE PROPERTY OF THE VMC GROUP AND MUST NOT BE COPIED OR DISTRIBUTED OUTSIDE THE VMC GROUP EXCEPT TO AUTHORIZED PERSONS WITH A GENUINE NEED TO KNOW WHO BY THE USE HEREOF ACKNOWLEDGE THE VMC GROUPS OWNERSHIP AND AGREE TO MAINTAIN THIS INFORMATION AND DESIGN IN STRICT CONFIDENCE.

REV.	DESCRIPTION	DATE	BY

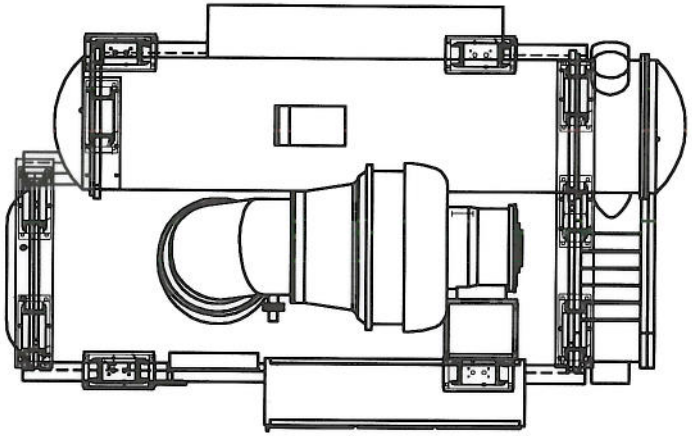

PLAN VIEW

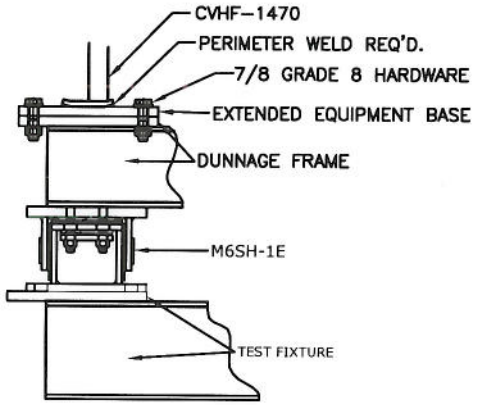

DETAIL "A"

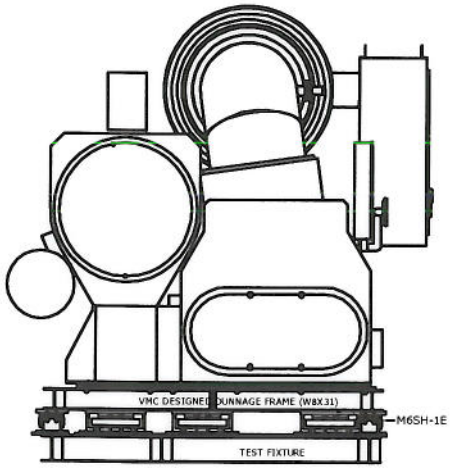

LEFT VIEW

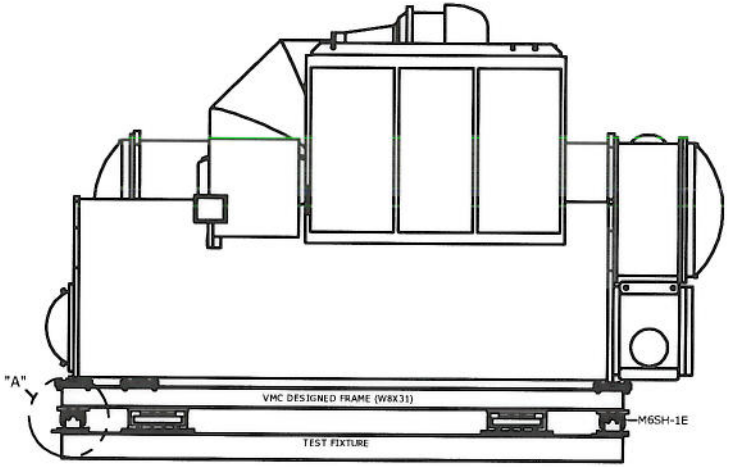

FRONT VIEW

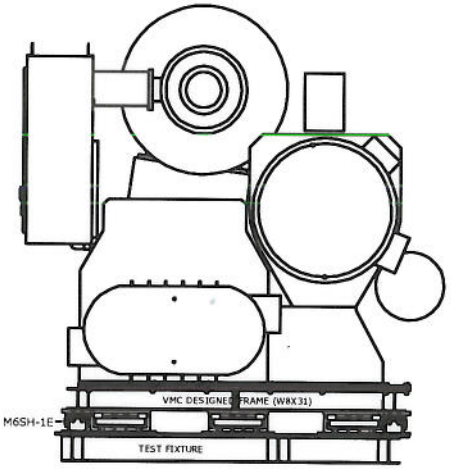

RIGHT SIDE VIEW

OTHER MATERIALS, COMPOUNDS, OR FINISHES WITH EQUAL OR SUPERIOR PROPERTIES MAY BE SUBSTITUTED AS THEY BECOME AVAILABLE.

CERTIFIED FOR: TRANE

JOB NAME: _____

CUSTOMER : _____

CUSTOMER P.O.: _____

SALES ORDER: _____

TRANE CENTRA-VAC
TEST FIXTURE LAYOUT
UUT 1B CVHF-1470 (1500T)
SPRING ISOLATED

THE VMC GROUP
The Power of Together
Bloomingdale, NJ 07403
Houston, TX 77041

SCALE : NONE

SHEET: 1 OF 2

Member VISCMA

DRAWING NO.: VMA-46420-1B

REVISION A

PROPRIETARY. EXCEPT AS OTHERWISE AGREED IN WRITING, THE INFORMATION AND DESIGN DISCLOSED HEREIN ARE THE PROPERTY OF THE VMC GROUP AND MUST NOT BE COPIED OR DISTRIBUTED OUTSIDE THE VMC GROUP EXCEPT TO AUTHORIZED PERSONS WITH A GENUINE NEED TO KNOW WHO BY THE USE HEREOF ACKNOWLEDGE THE VMC GROUP'S OWNERSHIP AND AGREE TO MAINTAIN THIS INFORMATION AND DESIGN IN STRICT CONFIDENCE.

7/13

THE VMC GROUP

Aeroflex International Isolators | Amber/Booth | Korfund Dynamics | Vibration Mountings & Controls

CenTraVac 1470 on Spring Isolators

UUT – 1A/1B

8/13

REV.	DESCRIPTION	DATE	BY

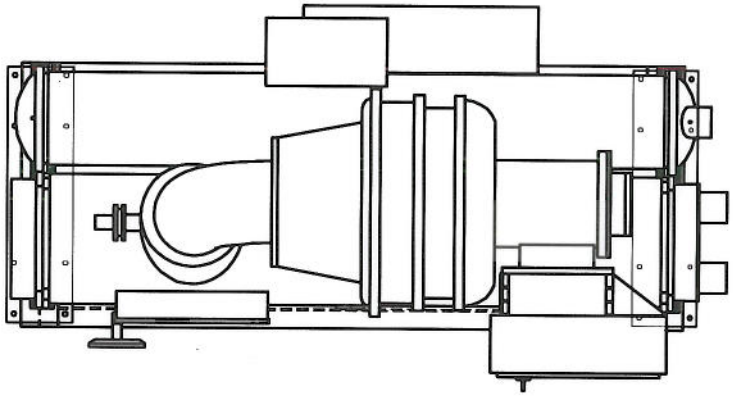

PLAN VIEW

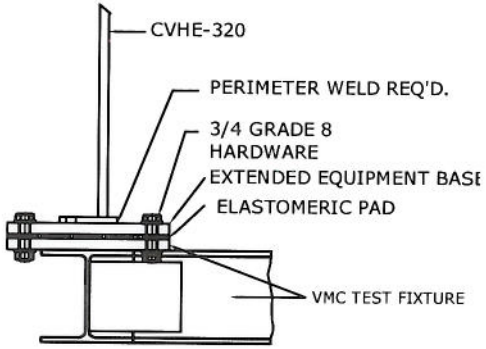

DETAIL "A"

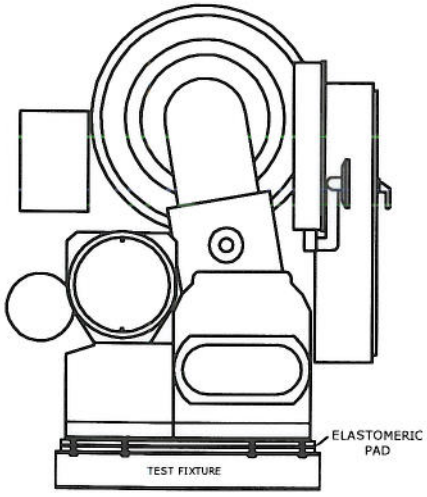

LEFT VIEW

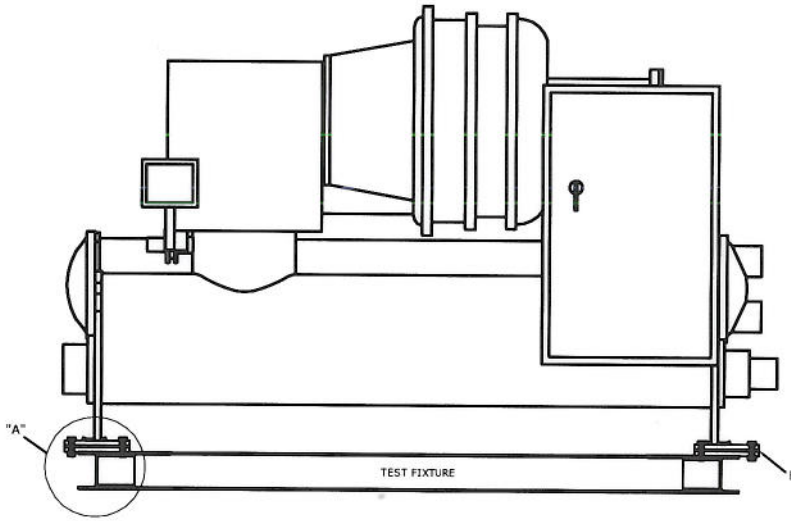

FRONT VIEW

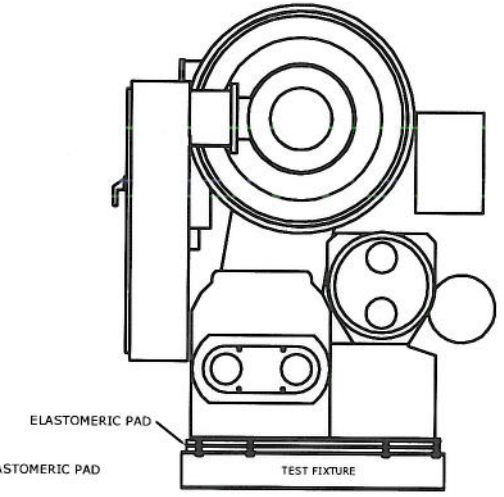

RIGHT SIDE VIEW

OTHER MATERIALS, COMPOUNDS, OR FINISHES WITH EQUAL OR SUPERIOR PROPERTIES MAY BE SUBSTITUTED AS THEY BECOME AVAILABLE.

CERTIFIED FOR: TRANE

JOB NAME: _____

CUSTOMER : _____

CUSTOMER P.O.: _____

SALES ORDER: _____

TRANE CENTRA-VAC
TEST FIXTURE LAYOUT
UUT 2A CVHE-0320 (320T)
ELASTOMERIC PAD

THE VMC GROUP
The Power of Together
Bloomingdale, NJ 07403
Houston, TX 77041

SCALE: NONE

SHEET: 1

Member VISCMA

DRAWING NO.: VMA-46420-2A

REVISION: A

PROPRIETARY EXCEPT AS OTHERWISE AGREED IN WRITING, THE INFORMATION AND DESIGN DISCLOSED HEREIN ARE THE PROPERTY OF THE VMC GROUP AND MUST NOT BE COPIED OR DISTRIBUTED OUTSIDE THE VMC GROUP EXCEPT TO AUTHORIZED PERSONS WITH A GENUINE NEED TO KNOW WHO BY THE USE HEREOF ACKNOWLEDGE THE VMC GROUPS OWNERSHIP AND AGREE TO MAINTAIN THIS INFORMATION AND DESIGN IN STRICT CONFIDENCE.

REV.	DESCRIPTION	DATE	BY

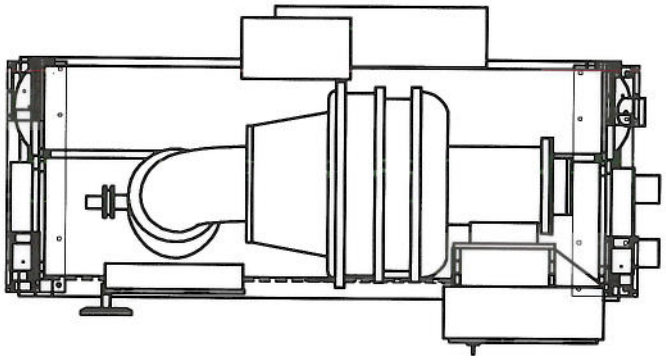

PLAN VIEW

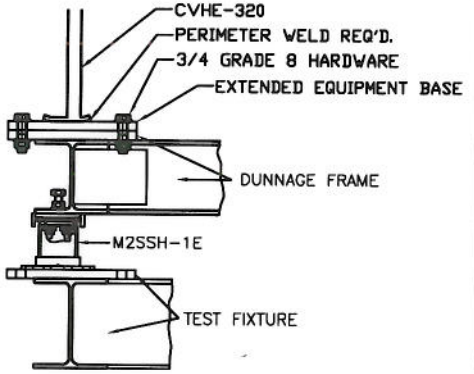

DETAIL "A"

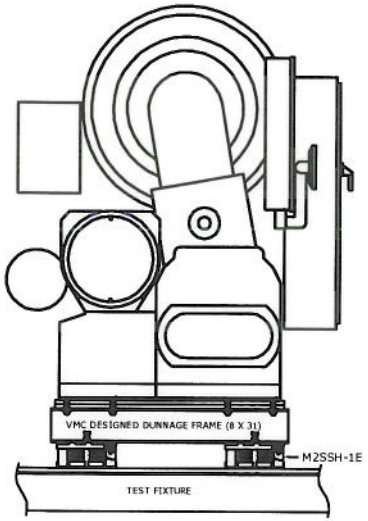

LEFT VIEW

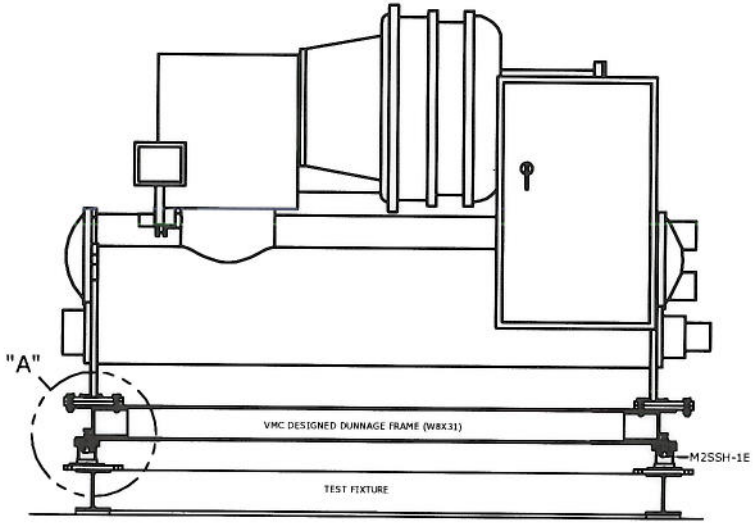

FRONT VIEW

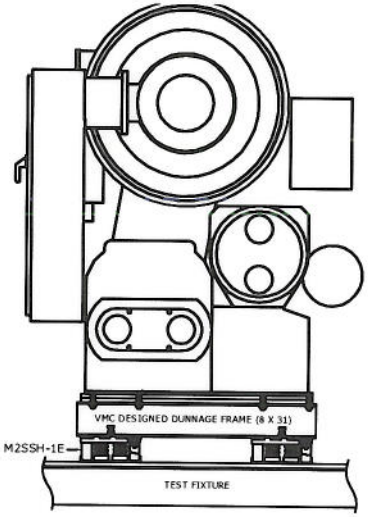

RIGHT SIDE VIEW

OTHER MATERIALS, COMPOUNDS, OR FINISHES WITH EQUAL OR SUPERIOR PROPERTIES MAY BE SUBSTITUTED AS THEY BECOME AVAILABLE.

CERTIFIED FOR: TRANE

JOB NAME: _____

CUSTOMER : _____

CUSTOMER P.O.: _____

SALES ORDER: _____

TRANE CENTRA-VAC
TEST FIXTURE LAYOUT
UUT 2B CVHE-0320 (320T)
SPRING ISOLATED

THE VMC GROUP
The Power of Together
Bloomingdale, NJ 07403
Houston, TX 77041

SCALE: NONE

SHEET: 1 OF 2

Member VISCMA

DRAWING NO.: VMA-46420-2B

REVISION: A

PROPRIETARY: EXCEPT AS OTHERWISE AGREED IN WRITING, THE INFORMATION AND DESIGN DISCLOSED HEREIN ARE THE PROPERTY OF THE VMC GROUP AND MUST NOT BE COPIED OR DISTRIBUTED OUTSIDE THE VMC GROUP EXCEPT TO AUTHORIZED PERSONS WITH A GENUINE NEED TO KNOW WHO BY THE USE HEREOF ACKNOWLEDGE THE VMC GROUP'S OWNERSHIP AND AGREE TO MAINTAIN THIS INFORMATION AND DESIGN IN STRICT CONFIDENCE.

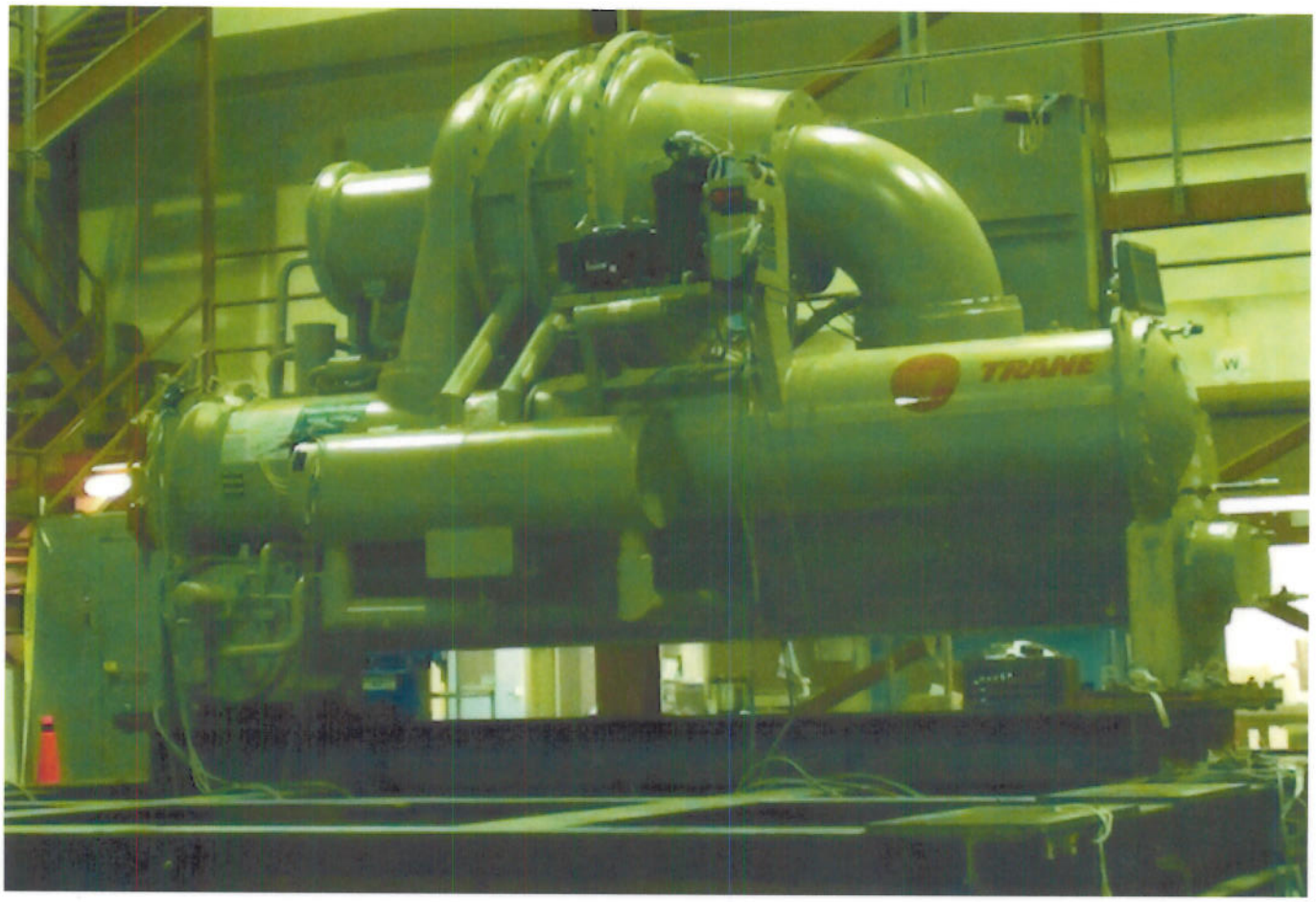

CenTraVac 320 on Pads

UUT-2A, 2B & 3

11/13

Photo 7.1 Test Setup on Vertical Axis

Photo 7.2 Test Setup on Front Axis

UUT-4

12/13

CenTraVac Chart: OSP Included Components and Tested Units
3/25/2011

Model	Comp Size	Shell Sizes	Shell Lengths	Unit Length	Unit Width	Unit Height	Max Weight	Unit Mounting		UUT
								Hard Mounted	Isolated	
CVHE	230 - 320	032	SS	11' 3"	5' 10-3/8"	7' 9-3/4"	16042	Extended Baseplate w/Pads	Extended Baseplate w/Dunnage And Spring Isolators	2, 3
	230 - 320	050	SS	11' 3"	6' 10-1/8"	8' 2-1/4"	19360			
	230 - 320	032	SL & LL	15' 1/4"	5' 10-3/8"	7' 9-3/4"	17773			
	230 - 320	050	SL & LL	15' 1/4"	6' 10-1/8"	8' 2-1/4"	21732			
	360 - 500	050	SS	11' 3"	6' 10-1/8"	8' 2-1/4"	20897			
	360 - 500	050	SL & LL	15' 1/4"	6' 10-1/8"	8' 2-1/4"	23269			
	360 - 500	050/080	SS	11' 3"	6' 10-1/8"	8' 7-3/4"	24500			
	360 - 500	050/080	LL	15' 1/4"	6' 10-1/8"	8' 7-3/4"	28000			
	360 - 500	080	SS	11' 3"	7' 11-7/16"	9' 6-3/8"	28237			
	360 - 500	080	SL & LL	15' 1/4"	7' 11-7/16"	9' 6-3/8"	31840			
CVHF	350 - 570	050	SS	11' 3"	6' 10-1/8"	8' 4"	20007			
	350 - 570	050	SL & LL	15' 1/4"	6' 10-1/8"	8' 4"	22234			
	350 - 570	050/080	SS	11' 3"	6' 10-1/8"	8' 7-3/4"	21150			
	350 - 570	050/080	LL	15' 1/4"	6' 10-1/8"	8' 7-3/4"	27037			
	350 - 570	080	SS	11' 3"	7' 11-7/16"	9' 6-3/8"	27958			
	350 - 570	080	SL & LL	15' 1/4"	7' 11-7/16"	9' 6-3/8"	31833			
	650 - 910	080	SS	11' 3"	7' 11-7/16"	9' 6-3/8"	30374			
	650 - 910	080	SL & LL	15' 1/4"	7' 11-7/16"	9' 6-3/8"	34249			
	650 - 910	080/142	LL	15' 1/4"	9' - 3"	9' 10"	41235			
	650 - 910	142	ML & LL	15' 1/4"	9' 9-1/8"	10' 1-1/2"	44300			
	1070 - 1300	080/142	LL	15' 1/4"	9' - 3"	10 - 1-1/2"	42416			
	1070 - 1300	142	ML & LL	15' 1/4"	9' 11-1/8"	10' 1-1/2"	44787			
	1070 - 1300	142	EL	16' 10-3/4"	9' 11-1/8"	10' 1-1/2"	46064			
	1070 - 1300	210	LL	15' 1/4"	10' 6-7/16"	11' 3-1/4"	54233			
	1070 - 1300	250	EL	16' 10-3/4"	11' 6-7/8"	11' 7-1/4"	65616			
	1470 - 1720	210	LL	15' 1/4"	10' 6-7/16"	11' 5"	57299			
	1470 - 1720	250	EL	16' 10-3/4"	11' 6-7/8"	11' 9-1/8"	69475	Extended Baseplate w/Pads	Extended Baseplate w/Dunnage And Spring Isolators	1

		Dimensions Evap			Dimensions Cond			
	Size	OD	L	Weight	OD	L	Weight	UUT
Shells	032S	27.75	135	2900	19.938	135	2460	2, 3
	032L	27.75	180	3500	19.938	180	3006	
	050S	35	135	4900	24.938	135	3526	
	050L	35	180	6000	24.938	180	4436	
	080S	48.312	135	7200	30.75	135	5280	
	080L	48.312	180	9000	30.75	180	6776	
	142M	52.312	160	11036	n/a	n/a	n/a	
	142L	52.312	180	11938	40.5	180	10995	
	142E	52.312	203	12921	n/a	n/a	n/a	
	210L	59.812	180	14755	45.062	180	14154	
	250E	66.312	203	20068	n/a	n/a	n/a	1
	250L	n/a	n/a	n/a	49.312	180	17341	1

		Dimensions				
		Max L	Max W	Max H	Max Weight	UUT
Unit Mounted Starters	LV	13	36	48	600	2
	MV	20	38	60	557	2, 3

	Product Series	Model	Manufacturer	Dimensions				UUT	Mounting
				Max L	Max W	Max H	Max Weight		
AFD's	Liqui-flo2	Frame 4	Rockwell	20	98	70.5	2800	1	On Equipment
	Air-Cooled AFD	AFDG0649	Danfoss	60	30	70	1520	4	Remote Mounted with Rigid Base

	Model	Size	Manufacturer	Dimensions				UUT
				L	W	H	Weight	
Compressors	CVHE	230 - 320	TRANE	85	49.5	48.5	8185	2, 3
	CVHE	360 - 500	TRANE	88	52	49.5	8803	
	CVHF	350 - 570	TRANE	78.5	51.5	51	8013	
	CVHF	650 - 910	TRANE	81.5	55	55.5	9900	
	CVHF	1070 - 1300	TRANE	80.5	59.5	59.5	10714	
	CVHF	1470 - 1720	TRANE	93.5	63.5	63.5	13932	1

	Manufacturer	Dimensions				UUT
		L	W	H	Weight	
Control Panels	TRANE	6	30	36	131	1,2,3

	Dimensions				UUT
	L	W	H	Weight	
Purge	27.5	21.75	25.75	140	1, 2, 3

THE VMC GROUP
The Power of Together™

13/13