Office of Statewide Health Planning and Development

Facilities Development Division www.oshpd.ca.gov/fdd
400 R Street, Suite 200, Sacramento, California 95811-6213 Phone (916) 440-8300 Fax (916) 654-2973

APPLICATION FOR PREAPPROVAL

SPECIAL SEISMIC CERTIFICATION OF EQUIPMENT AND COMPONENTS

For Office Use Only

APPLICATION NO.

OSP -0219-10

Check whether application is: NEW [X] RENEWAL [ ]

1.0

Loren Cook Company	Brad Skidmore
Manufacturer	*Manufacturer's Technical Representative*

2015 B. Dale St.
Mailing Address

417.869.6474	bskidmore@lorencook.com
Telephone	*E-mail Address*

2.0

QMX and SQN Fans	**Inline Fan**
Product Name	*Product Type*

SQN-B, SQN-D, SQN-HP, QMX, QMX-HP, QMX-XP
Product model No (List all unique product identification numbers and/or serial numbers)

General Description: Square or circular, Floor or ceiling mounted inline fans ranging in size from 60-420 for square units and 90-600 for round units. (See tables for specific units)

3.0

Tobolski Watkins Engineering, Inc.	Matthew Tobolski, Ph.D., P.E.
Applicant Company Name	*Contact Person*

3710 Ruffin Road, San Diego, CA 92123
Mailing Address

858-381-5843	mtobolski@tobolskiwatkins.com
Telephone	*E-mail Address*

I hereby agree to reimburse the Office of Statewide Health Planning and Development for the actual costs incurred by the department for review.

Signature of Applicant	10/04/2011
	Date
President and CEO	Tobolski Watkins Engineering, Inc.
Title	*Company Name*

4.0 ***Registered Design Professional Preparing the Report***

Tobolski Watkins Engineering Inc.
Company Name

Matthew J. Tobolski, Ph.D, P.E. — *Contact Name*
C 72806 — *California License Number*

3710 Ruffin Road, San Diego, CA 92123
Mailing Address

858-381-5843 — *Telephone*
mtobolski@tobolskiwatkins.com — *E-mail Address*

5.0 ***California Licensed Structural Engineer Review and Acceptance of the Report***

Tobolski Watkins Engineering Inc.
Company Name

Derrick A. Watkins, S.E. — *Contact Name*
S 5257 — *California License Number*

3710 Ruffin Road, San Diego, CA 92123
Mailing Address

858-381-5843 — *Telephone*
dwatkins@tobolskiwatkins.com — *E-mail Address*

6.0 ***Anchorage Pre-Approval***

☐ *Anchorage is pre-approved under OPA-*
(Separate application for anchorage pre-approval is required)

☒ Anchorage is not Pre-approved

7.0 ***Certification Method***

☒ *Testing in accordance with:* ☒ *ICC-ES AC-156* ☐ *Other (Please Specify):*

☐ *Analysis*
☐ *Experience data*
☐ *Combination of Testing, Analysis, and/or Experience Data (Please Specify):*

8.0 ***Testing Laboratory (if applicable)***

Clark Testing — *Company Name*
Frank Medeiros — *Contact Name*

1801 Route 51, Jefferson Hills, PA
Mailing Address

412.387.1003 — *Telephone*
fmedeiros@clarktesting.com — E-mail:

9.0 *Approval Parameters*

Design in accordance with ASCE 7-05 Chapter 13: ☒ Yes ☐ No

Design Basis of Equipment or Components (F_p/W_p) = ***5.6 (floor mount) : 4.5 (ceiling mount)***

S_{DS} (Spectral response acceleration at short period) = ***2.5g***

a_p (In-structure equipment or component amplification factor) = ***2.5***

R_p (Equipment or component response modification factor) = ***2.0 (floor mount) : 2.5 (ceiling mount)***

I_p (Importance factor) = ***1.5***

z/h (Height factor ratio)= ***1.0***

Equipment or Component fundamental period(s) = ***[See Attachment]***

Building period limits (if any) = ***None***

Overall dimensions and weight (or range thereof) = ***[See Attachment]***

Equipment or Components @ grade designed in accordance with ASCE 7-05 Chapter 15: ☐ Yes ☒ No

Design Basis of Equipment or Components (V/W) =

S_{DS} (Spectral response acceleration at short period) =

S_1 (Spectral response acceleration at 1 second period) =

R (Response modification coefficient)=1.0

Ω_0 (System overstrength factor) =1.0

C_d (Deflection amplification factor) =1.0

I_p (Importance factor) =1.5

Height to Center of Gravity above base =

Equipment or Component fundamental period(s) = Sec

Overall dimensions and weight (or range thereof) =

Tank(s) designed in accordance with ASME BPVC, 2007: ☐ Yes ☒ No

10.0 *List of attachments supporting the special seismic certification of equipment or components:*

☒ *Test Report* ☒ *Drawings* ☐ *Manufacturer's Catalog*

☐ *Calculations* ☐ *Others (Please Specify):*

11.0 *OSHPD Approval* *(For Office Use Only)*

10/5/27	**December 31, 2016**
Signature & Date	*Approval Expiration Date*
M. R. Karim, SHFR	S_{DS} (g) = **2.5** z/h = **1.0**
Name & Title	*Special Seismic Certification Valid Up to*

Condition of Approval (if any):

TOBOLSKI WATKINS ENGINEERING

Table 1

Special Seismic Certification Certified Product Matrix

TWEI Project No.: 2011-0169-CO-001

Manufacturer: Loren Cook

Model Line: SQN –B Fans

Certified Product Construction Summary:
Fan housing constructed of 18 gauge galvanized steel with integral duct collars. Pivoting motor plate of same material. Fan wheel constructed of aluminum blades and cast aluminum hub.

Certified Options Summary:
For floor mounted units: motor in top or side positions. For ceiling mounted units: motor in side position. Horizontal fan position. Belt drive. Regular pressure fan wheel.

Certified Mounting Summary:
Floor or ceiling mounted on vibration isolators. Flexible connectors are required for duct connection capable of accounting for unit displacement. SEOR to specify anchorage.

Building Code: CBC 2010 | ***Seismic Certification Limits:*** S_{DS} = 2.5 g | z/h = 1.0 | I_p = 1.5

Model Line	Model	Dimension (in)			Weight (lb)	Notes	UUT
		Depth	Width	Height			
SQN-B	60	22.0	14.0	26.5	100		1
	70	22.0	14.0	26.5	100		
	80	22.0	14.0	26.5	100		
	100	22.0	14.0	26.5	100		
	120	22.0	18.4	30.9	110		
	135	22.3	20.8	33.3	125		
	150	23.9	23.0	35.8	150		
	165	27.0	25.3	40.1	175		
	180	30.0	27.6	42.4	200		
	195	32.3	29.9	44.9	225		
	210	35.0	31.3	46.3	250		
	225	37.3	33.5	48.8	300		
	245	38.0	36.0	53.3	350		
	270	41.5	39.7	56.9	400		
	300	42.0	44.0	61.3	450		
	330	45.8	48.4	65.7	500		
	365	46.0	50.0	67.3	550		
	402	50.3	55.1	72.4	735		5

© 2010 Tobolski Watkins Engineering, Inc.

TOBOLSKI WATKINS ENGINEERING, INC. - 858-381-5843 - INFO@TOBOLSKIWATKINS.COM

TOBOLSKI WATKINS ENGINEERING

Table 2

Special Seismic Certification Certified Product Matrix

TWEI Project No.: 2011-0169-CO-001

Manufacturer: Loren Cook

Model Line: SQN – HP Fans

Certified Product Construction Summary:
Fan housing constructed of 18 gauge galvanized steel with integral duct collars. Pivoting motor plate of same material. Fan wheel constructed of aluminum blades and cast aluminum hub.

Certified Options Summary:
Horizontal fan position, Belt drive, Motor in top or side positions, High pressure fan wheel.

Certified Mounting Summary:
Floor or ceiling mounted on vibration isolators. Flexible connectors are required for duct connection capable of accounting for unit displacement. SEOR to specify anchorage.

Building Code: CBC 2010 | ***Seismic Certification Limits:*** S_{DS} = 2.5 g | z/h = 1.0 | I_p = 1.5

Model Line	Model	Dimension (in)			Weight (lb)	Notes	UUT
		Depth	Width	Height			
SQN-HP	135	22.3	20.8	33.3	135		4
	150	23.9	23.0	35.8	150		
	165	27.0	25.3	40.1	175		
	180	30.0	27.6	42.4	200		
	195	32.3	29.9	44.9	225		
	210	35.0	31.3	46.3	250		
	225	37.3	33.5	48.8	300		
	245	38.0	36.0	53.3	350		
	270	41.5	39.7	56.9	400		
	300	42.0	44.0	61.3	450		
	330	45.8	48.5	65.7	500		
	365	46.0	50.0	67.3	550		
	402	50.3	55.1	72.4	800		2

© 2010 Tobolski Watkins Engineering, Inc.

TOBOLSKI WATKINS ENGINEERING

Table 3

Special Seismic Certification Certified Product Matrix

TWEI Project No.: 2011-0169-CO-001

Manufacturer: Loren Cook

Model Line: SQN – D Fans

Certified Product Construction Summary:
Fan housing constructed of 18 gauge galvanized steel with integral duct collars. Pivoting motor plate of same material. Fan wheel constructed of aluminum blades and cast aluminum hub.

Certified Options Summary:
Horizontal fan position. Direct drive motor – in line with fan shaft center position, regular pressure fan wheel

Certified Mounting Summary:
Floor or ceiling mounted on vibration isolators. Flexible connectors are required for duct connection capable of accounting for unit displacement. SEOR to specify anchorage.

Building Code: CBC 2010 | ***Seismic Certification Limits:*** S_{DS} = 2.5 g | z/h = 1.0 | I_p = 1.5

Model Line	Model	Dimension (in)			Weight (lb)	Notes	UUT
		Depth	Width	Height			
SQN-D	70	14	12	25.6	70		
	90	17	14	29.6	90		
	100	22	14	29.6	100		
	120	22	18.4	29.6	105		
	135	22.3	20.8	38.4	110		
	150	23.9	23	43.1	120		
	165	27	25.4	52.7	130		3 / 6

© 2010 Tobolski Watkins Engineering, Inc.

Table 4

Special Seismic Certification Certified Product Matrix

TWEI Project No.: 2011-0159-CO-001

Manufacturer: Loren Cook

Model Line: QMX Fans

Certified Product Construction Summary:
Fan housing and blades constructed of heavy gauge carbon steel. Fan housing attached to a steel base frame. Fans with motor at horizontal position are mounted on rails perpendicular to airflow to evenly distribute the load.

Certified Options Summary:
Horizontal fan position. Floor mount motor positions: A, C, and G. Ceiling mount motor positions: C, E, G. Regular pressure fan blade style. Arrangement 9 construction.

Certified Mounting Summary:
Floor or ceiling mounted on vibration isolators. Flexible connectors are required for duct connection capable of accounting for unit displacement. SEOR to specify anchorage.

Building Code: CBC 2010 | ***Seismic Certification Limits:*** S_{DS} = 2.5 g | ***z/h*** = 1.0 | I_p = 1.5

Model Line	Model	Dimension (in)			Weight (lb)	Notes	UUT
		Depth	Width	Height			
QMX	90	19.9	15.9	30.0	240		10
	120	24.0	20.1	36.5	309		
	135	27.0	22.3	39.4	418		
	150	30.0	24.4	42.1	485		
	165	33.0	26.5	43.8	557		
	180	35.0	28.6	46.3	618		
	202	37.5	31.8	49.9	803		
	225	41.0	64.9	55.9	937		
	245	44.5	37.8	59.0	1,089		
	270	47.0	41.3	62.9	1,230		
	300	54.0	45.5	68.1	1,455		
	330	58.5	49.8	74.8	1,750		
	365	64.0	54.8	80.3	2,260		
	402	68.5	59.9	88.3	2,785		
	445	74.0	66.1	94.9	3,465		
	490	80.5	72.4	103.3	4,180		
	540	87.0	79.4	110.9	4,950		
	600	95.5	87.9	122.1	6,070		9

© 2010 Tobolski Watkins Engineering, Inc.

Table 5

Special Seismic Certification Certified Product Matrix

TWEI Project No.: 2011-0159-CO-001

Manufacturer: Loren Cook

Model Line: QMX – HP Fans

Certified Product Construction Summary:
Fan housing and blades constructed of heavy gauge carbon steel. Fan housing attached to a steel base frame. Fans with motor at horizontal position are mounted on rails perpendicular to airflow to evenly distribute the load.

Certified Options Summary:
Horizontal fan position. Floor mount motor positions: A, C, and G. Ceiling mount motor positions: C, E, G. High pressure fan blade style. Arrangement 9 construction.

Certified Mounting Summary:
Floor or ceiling mounted on vibration isolators. Flexible connectors are required for duct connection capable of accounting for unit displacement. SEOR to specify anchorage.

Building Code: CBC 2010 | ***Seismic Certification Limits:*** S_{DS} = 2.5 g | ***z/h*** = 1.0 | I_p = 1.5

Model Line	Model	Dimension (in)			Weight (lb)	Notes	UUT
		Depth	Width	Height			
QMX - HP	90	19.9	15.9	30.0	180		7
	120	24.0	20.1	36.5	352		
	135	27	22.3	39.4	431		
	150	30.0	24.4	42.1	511		
	165	33.0	26.5	43.8	667		
	180	35.0	28.6	46.3	723		
	202	37.5	31.8	49.9	860		
	225	41.0	64.9	55.9	1,023		
	245	44.5	37.8	59.0	1,135		
	270	47.0	41.3	62.9	1,085		11
	300	54.0	45.5	68.1	1,610		
	330	58.5	49.8	74.8	1,885		
	365	64.0	54.8	80.3	2,500		
	402	68.5	59.9	88.3	3,045		
	445	74.0	66.1	94.9	3,605		
	490	80.5	72.4	103.3	4,490		
	540	87.0	79.4	110.9	5,090		
	600	95.5	87.9	122.1	6,440		

© 2010 Tobolski Watkins Engineering, Inc.

Table 6

Special Seismic Certification Certified Product Matrix

TWEI Project No.: 2011-0159-CO-001

Manufacturer: Loren Cook

Model Line: QMX – XP Fans

Certified Product Construction Summary:
Fan housing and blades constructed of heavy gauge carbon steel. Fan housing attached to a steel base frame. Fans with motor at horizontal position are mounted on rails perpendicular to airflow to evenly distribute the load.

Certified Options Summary:
Horizontal fan position. Floor mount motor positions: A, C, and G. Ceiling mount motor positions: C, E, G. Extra pressure fan blade style. Arrangement 9 construction.

Certified Mounting Summary:
Floor or ceiling mounted on vibration isolators. Flexible connectors are required for duct connection capable of accounting for unit displacement. SEOR to specify anchorage.

Building Code: CBC 2010 | ***Seismic Certification Limits:*** S_{DS} = 2.5 g | ***z/h*** = 1.0 | I_p = 1.5

Model Line	Model	Dimension (in)			Weight (lb)	Notes	UUT
		Depth	Width	Height			
QMX - XP	90	19.88	15.9	30.0	271		
	120	24	20.1	36.5	385		
	135	27	22.3	39.4	453		
	150	30	24.4	42.1	526		
	165	33	26.5	43.8	687		
	180	35	28.6	46.3	791		
	202	37.5	31.8	49.9	911		
	225	41	64.9	55.9	1,133		
	245	44.5	37.8	59.0	1,210		
	270	47	41.3	62.9	1,370		8
	300	54	45.5	68.1	2,280		
	330	58.5	49.8	74.8	2,795		
	365	64	54.8	80.3	3,288		
	402	68.5	59.9	88.3	4,042		
	445	74	66.1	94.9	4,780		
	490	80.5	72.4	103.3	5,530		
	540	87	79.4	110.9	6,090		
	600	95.5	87.9	122.1	7,030		12

© 2010 Tobolski Watkins Engineering, Inc.

TOBOLSKI WATKINS ENGINEERING

Table 7

Special Seismic Certification Certified Product Matrix

TWEI Project No.: 2011-0169-CO-001

Manufacturer: Loren Cook

Model Line: SQN Fan Motors

Certified Product Construction Summary:
Manufacturer supplied motors.

Certified Options Summary:
Motor manufacturers as listed below.

Certified Mounting Summary:
Mounted directly to fan unit in configurations listed in prior tables.

Building Code: CBC 2010 | ***Seismic*** | S_{DS} = 2.5 g | z/h = 1.0 | I_p = 1.5

Model Line	Manufacturer	Weight (lbs)	HP	Voltage	Drive	Comment	UUT
SQN	A.O. Smith	12	1/20	230/460V	Direct	Smallest	
		...					
		30	2	230/460V	Direct	Largest	3, 6
	Baldor	23	3/4	230/460V	Belt	Smallest	1
		...					
		120	10	230/460V	Belt	Largest	5
	TECO-Westinghouse	250	15	230/460V	Belt		2
	WEG	45	1.5	230/460V	Belt		4

© 2010 Tobolski Watkins Engineering, Inc.

TOBOLSKI WATKINS ENGINEERING

Table 8

Special Seismic Certification Certified Product Matrix

TWEI Project No.: 2011-0169-CO-001

Manufacturer: Loren Cook

Model Line: QMX Fan Motors

Certified Product Construction Summary:
Manufacturer supplied motors.

Certified Options Summary:
Motor manufacturers as listed below.

Certified Mounting Summary:
Mounted directly to fan unit in configurations listed in prior tables.

Building Code: CBC 2010 | ***Seismic*** | S_{DS} = 2.5 g | z/h = 1.0 | I_p = 1.5

Model Line	Manufacturer	Weight (lbs)	HP	Voltage	Drive	Comment	UUT
QMX	Baldor	61	3	230/460V	Belt	Smallest	7, 10
		...					
		245	25	230/460V	Belt		8, 11
		...					
		797	100	230/460V	Belt	Largest	9, 12

© 2010 Tobolski Watkins Engineering, Inc.

TOBOLSKI WATKINS ENGINEERING

UUT - 1

UNIT UNDER TEST (UUT) Summary Sheet

TWEI Project No.: 2011-0169-CO-001

Manufacturer: Loren Cook

Model Line: SQN-B Fan

Model Number: 60

Product Construction Summary:

Fan housing constructed of 18 gauge galvanized steel with integral duct collars. Pivoting motor plate of same material. Fan wheel constructed of aluminum blades and cast aluminum hub.

Options/Subcomponent Summary:

Motor: Baldor, 3/4hp, side position, belt drive, 230/460V. Regular pressure fan assembly

UUT Properties

Weight (lb)	Dimensions (in)			Lowest Natural Frequency (Hz)		
	Depth	Width	Height	Front-Back	Side-Side	Vertical
100	22	14	26.5	N/A	N/A	N/A

UUT Highest Passed Seismic Run Information

Building Code	Test Criteria	S_{DS}	z/h	I_p	A_{FLX-H}	A_{RIG-H}	A_{FLX-V}	A_{RIG-V}
CBC 2010	ICC-ES AC 156	2.5g	1.0	1.5	4.0g	3.0g	1.67g	0.67g

Test Mounting Details:

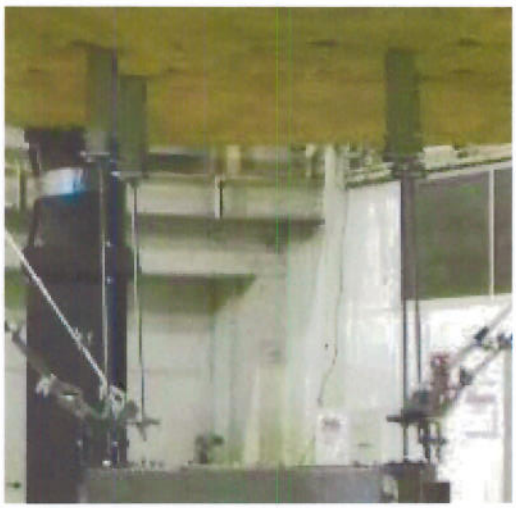

Ceiling mounted using hanging isolators of type "Caldyne HH30 ET80" and ¼" dia. 6x19 galvanized cables. Thread rods connected to UUT through two ¼" thick angle brackets, bolted together with two (2) 3/8" dia. Grade 5 bolts, to form C-style bracket.

© 2010 Tobolski Watkins Engineering, Inc.

TOBOLSKI WATKINS ENGINEERING, INC. - 858-381-5843 - INFO@TOBOLSKIWATKINS.COM

TOBOLSKI WATKINS ENGINEERING

UUT - 2

UNIT UNDER TEST (UUT) Summary Sheet

TWEI Project No.: 2011-0169-CO-001

Manufacturer: Loren Cook

Model Line: SQN - HP Fan

Model Number: 402

Product Construction Summary:

Fan housing constructed of 18 gauge galvanized steel with integral duct collars. Pivoting motor plate of same material. Fan wheel constructed of aluminum blades and cast aluminum hub. On the outlet side of the unit, aluminum corner braces were secured with 3/8"-16 grade 5 bolts and nuts, flat washers and lock washers.

Options/Subcomponent Summary:

Motor: TECO-Westinghouse, 15hp, side position, belt drive, 230/460V. High pressure fan assembly.

UUT Properties

Weight (lb)	Dimensions (in)			Lowest Natural Frequency (Hz)		
	Depth	Width	Height	Front-Back	Side-Side	Vertical
800	50.3	55.1	72.4	N/A	N/A	N/A

UUT Highest Passed Seismic Run Information

Building Code	Test Criteria	S_{DS}	z/h	I_p	A_{FLX-H}	A_{RIG-H}	A_{FLX-V}	A_{RIG-V}
CBC 2010	ICC-ES AC 156	2.5g	1.0	1.5	4.0g	3.0g	1.67g	0.67g

Test Mounting Details:

Ceiling mounted using hanging isolators of type Caldyne HH30 ET347 and 3/8" dia. 6x19 galv. steel cables. ½" dia. thread rods connected to UUT through two ¼" thick angle brackets, bolted together with two (2) 3/8" dia. Grade 5 bolts, to form C-style bracket.

© 2010 Tobolski Watkins Engineering, Inc.

TOBOLSKI WATKINS ENGINEERING, INC. - 858-381-5843 - INFO@TOBOLSKIWATKINS.COM

TOBOLSKI WATKINS ENGINEERING

UUT - 3

UNIT UNDER TEST (UUT) Summary Sheet

TWEI Project No.: 2011-0169-CO-001

Manufacturer: Loren Cook

Model Line: SQN-D Fan

Model Number: 165

Product Construction Summary:

Fan housing constructed of 18 gauge galvanized steel with integral duct collars. Pivoting motor plate of same material. Fan wheel constructed of aluminum blades and cast aluminum hub.

Options/Subcomponent Summary:

Motor: A.O. Smith, 2hp, direct drive, 230/460V. Regular pressure fan assembly.

UUT Properties

Weight (lb)	Dimensions (in)			Lowest Natural Frequency (Hz)		
	Depth	Width	Height	Front-Back	Side-Side	Vertical
130	27	25.4	52.7	N/A	N/A	N/A

UUT Highest Passed Seismic Run Information

Building Code	Test Criteria	S_{DS}	z/h	I_p	A_{FLX-H}	A_{RIG-H}	A_{FLX-V}	A_{RIG-V}
CBC 2010	ICC-ES AC 156	2.5g	1.0	1.5	4.0g	3.0g	1.67g	0.67g

Test Mounting Details:

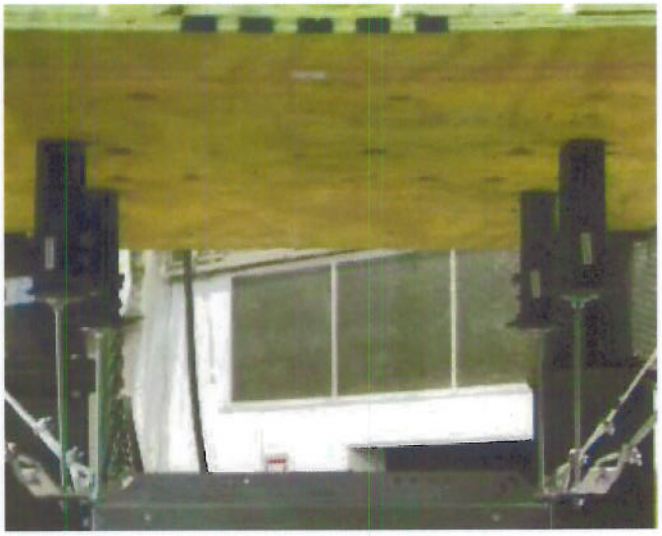

Ceiling mounted using hanging isolators of type "Caldyne HH30 ET80" with ¼" dia. 6x19 galv. steel cables. 3/8" dia. thread rods connected to UUT through one ¼" thick angle bracket.

© 2010 Tobolski Watkins Engineering, Inc.

TOBOLSKI WATKINS ENGINEERING

UUT - 4

UNIT UNDER TEST (UUT) Summary Sheet

TWEI Project No.: 2011-0169-CO-001

Manufacturer: Loren Cook

Model Line: SQN-HP Fan

Model Number: 135

Product Construction Summary:

Fan housing constructed of 18 gauge galvanized steel with integral duct collars. Pivoting motor plate of same material. Fan wheel constructed of aluminum blades and cast aluminum hub.

Options/Subcomponent Summary:

Motor: WEG, 1.5hp, top position, belt drive, 230/460V. High pressure fan assembly.

UUT Properties

Weight (lb)	Dimensions (in)			Lowest Natural Frequency (Hz)		
	Depth	Width	Height	Front-Back	Side-Side	Vertical
135	22.3	20.8	33.3	2.5	3.1	9.0

UUT Highest Passed Seismic Run Information

Building Code	Test Criteria	S_{DS}	z/h	I_p	A_{FLX-H}	A_{RIG-H}	A_{FLX-V}	A_{RIG-V}
CBC 2010	ICC-ES AC 156	2.5g	1.0	1.5	4.0g	3.0g	1.67g	0.67g

Test Mounting Details:

Floor mounted using vibration isolators of type Caldyne JQAE106K. The isolators are mounted directly to ¼" steel angle brackets which are attached to side of the UUT at the base.

© 2010 Tobolski Watkins Engineering, Inc.

TOBOLSKI WATKINS ENGINEERING

UUT - 5

UNIT UNDER TEST (UUT)
Summary Sheet

TWEI Project No.: 2011-0169-CO-001

Manufacturer: Loren Cook

Model Line: SQN-B Fan

Model Number: 402

Product Construction Summary:
Fan housing constructed of 18 gauge galvanized steel with integral duct collars. Pivoting motor plate of same material. Fan wheel constructed of aluminum blades and cast aluminum hub.

Options/Subcomponent Summary:
Motor: Baldor, 10hp, top position, Belt Drive, 230/460V. High pressure fan assembly.

UUT Properties

Weight (lb)	Dimensions (in)			Lowest Natural Frequency (Hz)		
	Depth	Width	Height	Front-Back	Side-Side	Vertical
735	50.3	55.1	72.4	3.2	3.4	7.7

UUT Highest Passed Seismic Run Information

Building Code	Test Criteria	S_{DS}	z/h	I_p	A_{FLX-H}	A_{RIG-H}	A_{FLX-V}	A_{RIG-V}
CBC 2010	ICC-ES AC 156	2.5g	1.0	1.5	4.0g	3.0g	1.67g	0.67g

Test Mounting Details:

Floor mounted using vibration isolators of type Caldyne JQAE106K. The isolators are mounted directly to ¼" steel angle brackets which are attached to side of the UUT at the base.

© 2010 Tobolski Watkins Engineering, Inc.

TOBOLSKI WATKINS ENGINEERING

UUT - 6

UNIT UNDER TEST (UUT) Summary Sheet

TWEI Project No.: 2011-0169-CO-001

Manufacturer: Loren Cook

Model Line: SQN-D Fan

Model Number: 165

Product Construction Summary:

Fan housing constructed of 18 gauge galvanized steel with integral duct collars. Pivoting motor plate of same material. Fan wheel constructed of aluminum blades and cast aluminum hub.

Options/Subcomponent Summary:

Inline direct drive motor position. Motor: A.O. Smith, 2 horse power, 230/460V. Regular pressure fan assembly.

UUT Properties

Weight (lb)	Dimensions (in)			Lowest Natural Frequency (Hz)		
	Depth	Width	Height	Front-Back	Side-Side	Vertical
200	27.3	25.3	52.7	3.0	3.7	7.0

UUT Highest Passed Seismic Run Information

Building Code	Test Criteria	S_{DS}	z/h	I_p	A_{FLX-H}	A_{RIG-H}	A_{FLX-V}	A_{RIG-V}
CBC 2010	ICC-ES AC 156	2.5g	1.0	1.5	4.0g	3.0g	1.67g	0.67g

Test Mounting Details:

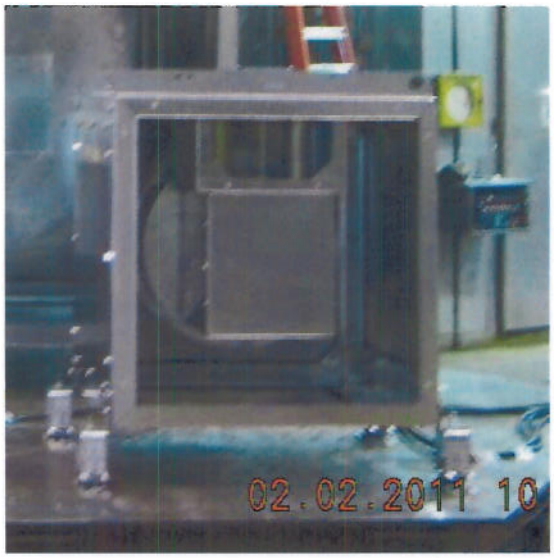

Floor mounted using vibration isolators of type Caldyne JQAE79K. The isolators are mounted directly to ¼" steel angle brackets which are attached to side of the UUT at the base.

© 2010 Tobolski Watkins Engineering, Inc.

TOBOLSKI WATKINS ENGINEERING

UUT - 7

UNIT UNDER TEST (UUT) Summary Sheet

TWEI Project No.: 2011-0159-CO-001

Manufacturer: Loren Cook

Model Line: QMX-HP Fan

Model Number: 90

Product Construction Summary:

Fan housing and blades constructed of heavy gauge carbon steel. Fan housing attached to a steel base frame.

Options/Subcomponent Summary:

Motor: Baldor, 3hp, "E" position, belt drive, 230/460V. Horizontal fan, ceiling mounted, high pressure fan blades, arrangement 9.

UUT Properties

Weight (lb)	Dimensions (in)			Lowest Natural Frequency (Hz)		
	Depth	Width	Height	Front-Back	Side-Side	Vertical
180	19.75	15.94	30.00	N/A	N/A	N/A

UUT Highest Passed Seismic Run Information

Building Code	Test Criteria	S_{DS}	z/h	I_p	A_{FLX-H}	A_{RIG-H}	A_{FLX-V}	A_{RIG-V}
CBC 2010	ICC-ES AC 156	2.5g	1.0	1.5	4.0g	3.0g	1.67g	0.67g

Test Mounting Details:

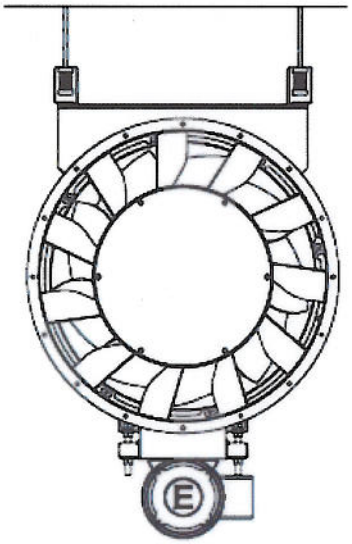

Ceiling mounted using CalDyn – HH30-ET129 – (3/8" rod – 20" long) isolator and ¼" Dia – 6x19 Galv. Steel cable at each corner.

© 2010 Tobolski Watkins Engineering, Inc.

TOBOLSKI WATKINS ENGINEERING, INC. - 858-381-5843 - INFO@TOBOLSKIWATKINS.COM

TOBOLSKI WATKINS ENGINEERING

UUT - 8

UNIT UNDER TEST (UUT) Summary Sheet

TWEI Project No.: 2011-0159-CO-001

Manufacturer: Loren Cook

Model Line: QMX-XP Fan

Model Number: 270

Product Construction Summary:

Fan housing and blades constructed of heavy gauge carbon steel. Fan housing attached to a steel base frame. Entire assembly mounted on rails to evenly distribute the off-center load caused by the motor mounted on side.

Options/Subcomponent Summary:

Motor: Baldor, 100hp, "A" position, belt drive, 230/460V. Horizontal fan, mounting rails, ceiling mounted, motor at C position, Extra pressure fan blades, arrangement 9.

UUT Properties

Weight (lb)	Dimensions (in)			Lowest Natural Frequency (Hz)		
	Depth	Width	Height	Front-Back	Side-Side	Vertical
1,370	47	41.31	62.88	N/A	N/A	N/A

UUT Highest Passed Seismic Run Information

Building Code	Test Criteria	S_{DS}	z/h	I_p	A_{FLX-H}	A_{RIG-H}	A_{FLX-V}	A_{RIG-V}
CBC 2010	ICC-ES AC 156	2.5g	1.0	1.5	4.0g	3.0g	1.67g	0.67g

Test Mounting Details:

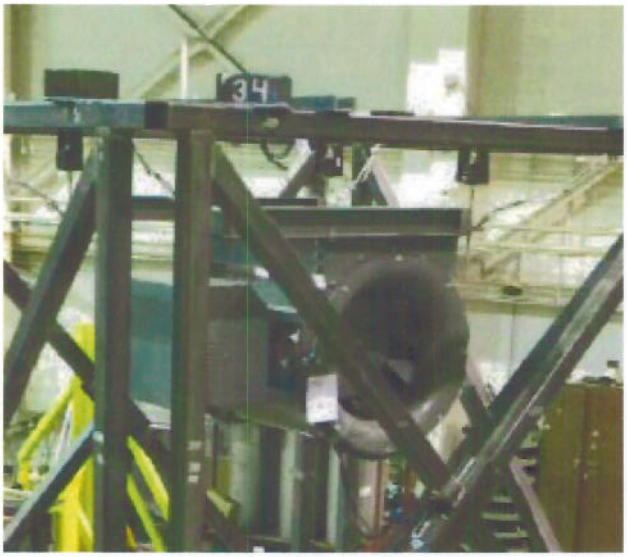

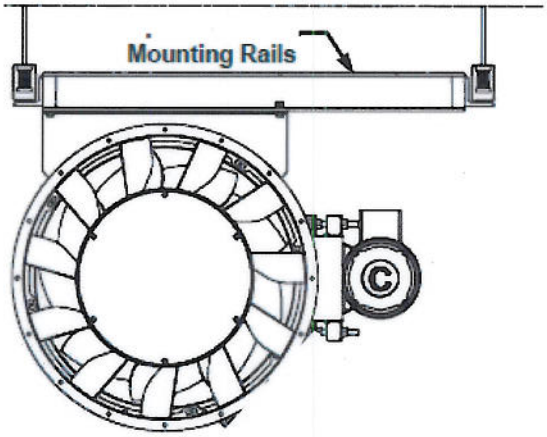

Ceiling mounted using CalDyn – HH30-ET940 - (3/4" rod – 24" long) isolator and 3/8" Dia – 6x19 Galv Steel cable at each corner.

© 2010 Tobolski Watkins Engineering, Inc.

TOBOLSKI WATKINS ENGINEERING, INC. - 858-381-5843 - INFO@TOBOLSKIWATKINS.COM

TOBOLSKI WATKINS ENGINEERING

UUT - 9

UNIT UNDER TEST (UUT) Summary Sheet

TWEI Project No.: 2011-0159-CO-001

Manufacturer: Loren Cook

Model Line: QMX Fan

Model Number: 600

Product Construction Summary:

Fan housing and blades constructed of heavy gauge carbon steel. Fan housing attached to a steel base frame. Entire assembly mounted on rails to evenly distribute the off-center load caused by the motor mounted on side.

Options/Subcomponent Summary:

Motor: Baldor, 100hp, "C" position, belt drive, 230/460V. Horizontal fan, mounting rails, ceiling mounted, regular pressure fan blades.

UUT Properties

Weight (lb)	Dimensions (in)			Lowest Natural Frequency (Hz)		
	Depth	Width	Height	Front-Back	Side-Side	Vertical
6,070	95.5	87.88	122.06	N/A	N/A	N/A

UUT Highest Passed Seismic Run Information

Building Code	Test Criteria	S_{DS}	z/h	I_p	A_{FLX-H}	A_{RIG-H}	A_{FLX-V}	A_{RIG-V}
CBC 2010	ICC-ES AC 156	2.5g	1.0	1.5	4.0g	3.0g	1.67g	0.67g

Test Mounting Details:

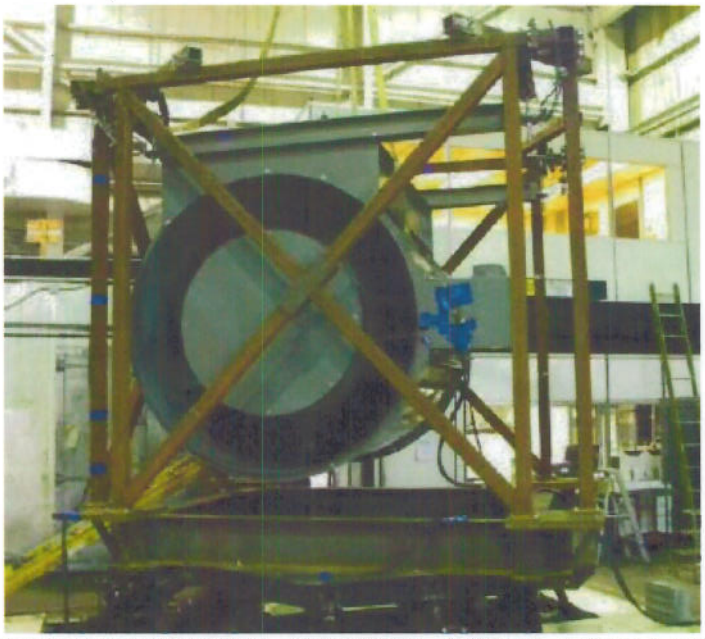

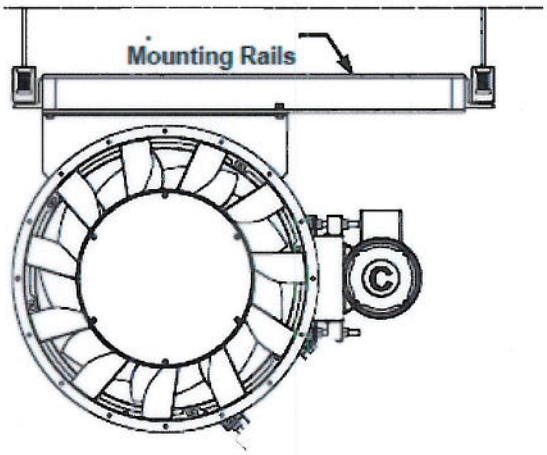

Ceiling mounted using CalDyn – HH30-ET940 - (3/4" rod – 24" long) isolator and 3/8" Dia – 6x19 Galv Steel cable at each corner.

© 2010 Tobolski Watkins Engineering, Inc.

TOBOLSKI WATKINS ENGINEERING, INC. - 858-381-5843 - INFO@TOBOLSKIWATKINS.COM

TOBOLSKI WATKINS ENGINEERING

UUT - 10

UNIT UNDER TEST (UUT) Summary Sheet

TWEI Project No.: 2011-0159-CO-001

Manufacturer: Loren Cook

Model Line: QMX Fan

Model Number: QMX 90

Product Construction Summary:

Fan housing and blades constructed of heavy gauge carbon steel. Motor attached to side of fan housing. Fan housing attached to a steel base frame. Entire assembly mounted on rails to evenly distribute the off-center load caused by the motor mounted on side.

Options/Subcomponent Summary:

Motor: Baldor, 3hp, "C" position, belt drive, 230/460V. Horizontal fan, mounting rails, regular pressure fan blades, arrangement 9.

UUT Properties

Weight (lb)	Dimensions (in)			Lowest Natural Frequency (Hz)		
	Depth	Width	Height	Front-Back	Side-Side	Vertical
240	19.88	15.94	31.25	4.9	7.7	11.4

UUT Highest Passed Seismic Run Information

Building Code	Test Criteria	S_{DS}	z/h	I_p	A_{FLX-H}	A_{RIG-H}	A_{FLX-V}	A_{RIG-V}
CBC 2010	ICC-ES AC 156	2.5g	1.0	1.5	4.0g	3.0g	1.67g	0.67g

Test Mounting Details:

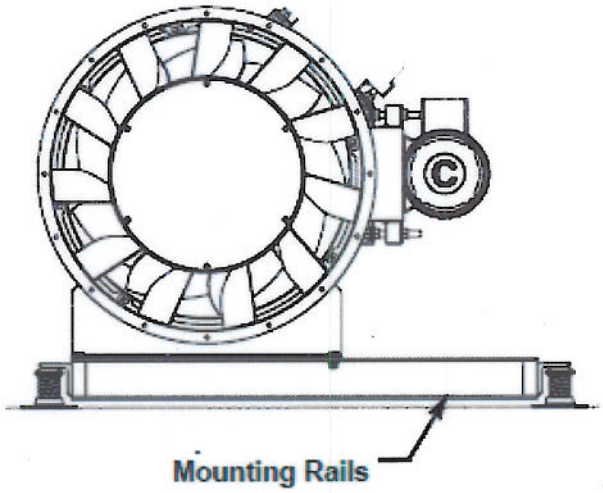

Floor mounted using CalDyn - JQAE106K isolator at each corner.

© 2010 Tobolski Watkins Engineering, Inc.

TOBOLSKI WATKINS ENGINEERING

UUT - 11

UNIT UNDER TEST (UUT) Summary Sheet

TWEI Project No.: 2011-0159-CO-001

Manufacturer: Loren Cook

Model Line: QMX-HP Fan

Model Number: 270

Product Construction Summary:

Fan housing and blades constructed of heavy gauge carbon steel. Fan housing attached to a steel base frame.

Options/Subcomponent Summary:

Motor: Baldor, 25hp, "A" position, belt drive, 230/460V. Horizontal fan, high pressure fan blade style, arrangement 9.

UUT Properties

Weight (lb)	Dimensions (in)			Lowest Natural Frequency (Hz)		
	Depth	Width	Height	Front-Back	Side-Side	Vertical
1,085	47	41.31	62.88	4.94	7.66	5.4

UUT Highest Passed Seismic Run Information

Building Code	Test Criteria	S_{DS}	z/h	I_p	A_{FLX-H}	A_{RIG-H}	A_{FLX-V}	A_{RIG-V}
CBC 2010	ICC-ES AC 156	2.5g	1.0	1.5	4.0g	3.0g	1.67g	0.67g

Test Mounting Details:

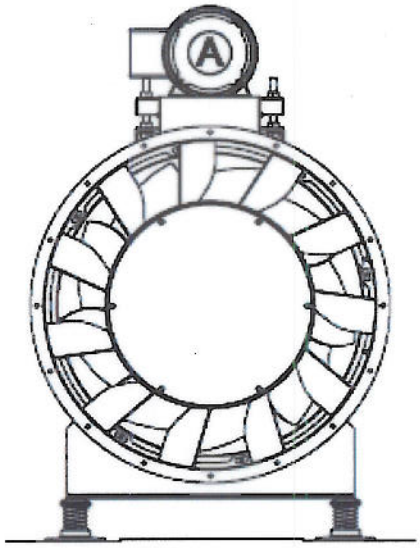

Floor mounted using CalDyn - JQBET473K isolator at each corner.

© 2010 Tobolski Watkins Engineering, Inc.

TOBOLSKI WATKINS ENGINEERING

UUT - 12

UNIT UNDER TEST (UUT)
Summary Sheet

TWEI Project No.: 2011-0159-CO-001

Manufacturer: Loren Cook

Model Line: QMX-XP Fan

Model Number: 600

Product Construction Summary:
Fan housing and blades constructed of heavy gauge carbon steel. Fan housing attached to a steel base frame which rest on four (4) vibration isolators.

Options/Subcomponent Summary:
Motor: Baldor, 100hp, "A" position, belt drive, 230/460V. Horizontal fan, extra pressure fan blade style, arrangement 9.

UUT Properties

Weight (lb)	Dimensions (in)			Lowest Natural Frequency (Hz)		
	Depth	Width	Height	Front-Back	Side-Side	Vertical
7,030	95.5	87.88	122.06	4.94	7.66	5.4

UUT Highest Passed Seismic Run Information

Building Code	Test Criteria	S_{DS}	z/h	I_p	A_{FLX-H}	A_{RIG-H}	A_{FLX-V}	A_{RIG-V}
CBC 2010	ICC-ES AC 156	2.5g	1.0	1.5	4.0g	3.0g	1.67g	0.67g

Test Mounting Details:

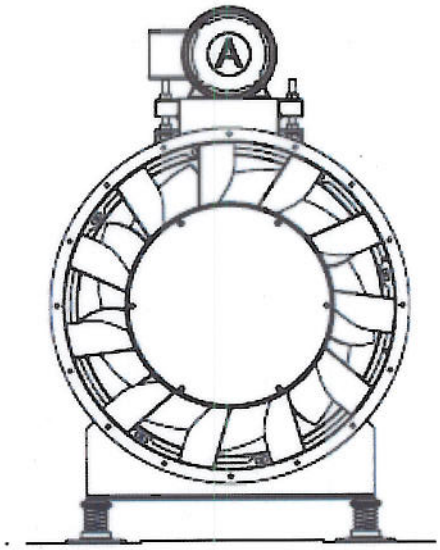

Floor mounted without isolator rails, using CalDyn RJJEQA3920T isolator at each corner.

© 2010 Tobolski Watkins Engineering, Inc.

TOBOLSKI WATKINS ENGINEERING, INC. - 858-381-5843 - INFO@TOBOLSKIWATKINS.COM