APPLICATION FOR OSHPD SPECIAL SEISMIC CERTIFICATION PREAPPROVAL (OSP)

OFFICE USE ONLY	
APPLICATION #:	OSP – 0392 – 10

OSHPD Special Seismic Certification Preapproval (OSP)

Type: ☒ New ☐ Renewal

Manufacturer Information

Manufacturer: Innovent Air Handling Equipment

Manufacturer's Technical Representative: Gary Helleson, Design Engineer

Mailing Address: 60 28th Avenue North, Minneapolis, MN 55411

Telephone: (612) 877-4897 Email: Gary.helleson@innoventair.com

Product Information

Product Name: Custom Air Handling Units (C-Series)

Product Type: Mechanical Equipment

Product Model Number: See Attachment
(List all unique product identification numbers and/or part numbers)

General Description: The certified units are custom air handling units. The units consist of blowers, dampers, coils, VFDs, indirect fired furnaces, compressors, condensing fans and energy recovery wheels. Seismic enhancement made to the test units and modifications required to address the anomalies observed during the tests shall be incorporated into the production units.

Mounting Description: Rigid base mount (with or without curb)

Applicant Information

Applicant Company Name: Dynamic Certification Laboratories

Contact Person: Joseph L. La Brie, S.E., Managing Partner

Mailing Address: 1315 Greg Street, Suite 109, Sparks, NV 89431

Telephone: (775) 358-5085 Email: LaBrie@MakeItRight.net

I hereby agree to reimburse the Office of Statewide Health Planning and Development review fees in accordance with the California Administrative Code, 2013.

Signature of Applicant: Date: 4/14/14

Title: Managing Partner Company Name: Dynamic Certification Laboratories

California Licensed Structural Engineer Responsible for the Engineering and Test Report(s)

Company Name: Dynamic Certification Laboratories

Name: Dr. Ahmad Itani, S.E. California License Number: SE-5220

Mailing Address: 1315 Greg Street, Suite 109, Sparks, NV 89431

Telephone: (775) 358-5085 Email: Itani@shaketest.com

Supports and Attachments Preapproval

☐ Supports and attachments are preapproved under OPM- _____
(Separate application for OSHPD Preapproval of Manufacturer's Certification (OPM) of Supports and attachments is required)

☒ Supports and attachments are not preapproved

Certification Method

☒ Testing in accordance with: ☒ ICC-ES AC156

☐ Other (Please Specify): _____

Testing Laboratory

Company Name: Dynamic Certification Laboratories

Contact Name: Austin Brown, P.E., Laboratory Manager

Mailing Address: 1315 Greg Street, Suite 109, Sparks, NV 89431

Telephone: (775) 358-5085 Email: Austin@shaketest.com

Seismic Parameters

Design in accordance with ASCE 7-10 Chapter 13: ☒ Yes ☐ No

Design Basis of Equipment or Components (F_p/W_p) = 3.49 @ S_{DS} = 1.55 and 2.99 @ S_{DS} = 1.33

S_{DS} (Design spectral response acceleration at short period, g) = 1.55 and 1.33(for internally isolated HPA Blowers greater than or equal to 250 lbs)

a_p (In-structure equipment or component amplification factor) = 2.5

R_p (Equipment or component response modification factor) = 2.0

Ω_0 (System overstrength factor) = 2.5

I_p (Importance factor) = 1.5

z/h (Height factor ratio) = 1.0

Equipment or Component Natural Frequencies (Hz) = SEE ATTACHMENT

Overall dimensions and weight (or range thereof) = SEE ATTACHMENT

Equipment or Components @ grade designed in accordance with ASCE 7-10 Chapter 15: ☐ Yes ☒ No

Design Basis of Equipment or Components (V/W) = _____

S_{DS} (Design spectral response acceleration at short period, g) = _____

S_{D1} (Design spectral response acceleration at 1 second period, g) = _____

R (Response modification coefficient) = _____

Ω_0 (System overstrength factor) = _____

C_d (Deflection amplification factor) = _____

I_p (Importance factor) = 1.5

Height to Center of Gravity above base = _____

Equipment or Component Natural Frequencies (Hz) = _____

Overall dimensions and weight (or range thereof) = _____

Tank(s) designed in accordance with ASME BPVC, 2010: ☐ Yes ☒ No

List of Attachments Supporting Special Seismic Certification

☒ Test Report(s) ☒ Drawings ☐ Calculations ☒ Manufacturer's Catalog

☐ Other(s) (Please Specify): _____

OSHPD Approval (For Office Use Only) – **Approval Expires on December 31, 2019**

Signature: _____ Date: October 21, 2014

Print Name: Timothy J. Piland Title: SSE

Special Seismic Certification Valid Up to : S_{DS} (g) = See Above z/h = 1

Condition of Approval (if applicable): _____

Special Seismic Certification
Certified Components

DCL Dynamic Certification Laboratories

Manufacturer: Innovent Air

Product Line: Custom Air Handling Units

Certified Product Construction: Carbon steel base with galvanized carbon steel or aluminum panels and floor

Certified Options: 1/2-100HP direct drive fans, dampers, coils, VFDs, controller, furnace, compressors, condensing unit and energy wheels. Units within dimensions listed below are certified for: outlet; inlet and outlet; outlet and side; and inlet, outlet and side section configurations.

Certified Mounting Description: Rigid base mount (with or without curb)

Tested Enclosure Sections

Description	Base Material	Exterior Wall Material	Interior Wall Material	Floor Material	Wall Thickness (in)	Mount	Dimensions (inches)			Maximum Operating Weight (lb)	Sds (z/h=1)	UUT
							Depth	Width	Height			
All 4 walls in place	Carbon Steel	Aluminum	Aluminum	Galvanized carbon steel	2	Rigid base mount (to 12" curb)	120	120	80	5,950	2.00	UUT1
All 4 walls in place	Carbon Steel	Galvanized carbon steel	Galvanized carbon steel	Galvanized carbon steel	4	Rigid base mount (to 12" curb)	120	120	120	8,130	1.55	UUT2a
Outlet wall removed	Carbon Steel	Galvanized carbon steel	Galvanized carbon steel	Galvanized carbon steel	4	Rigid base mount (to 12" curb)	120	120	120	8,130	1.55	UUT2b
Inlet and outlet walls removed	Carbon Steel	Galvanized carbon steel	Galvanized carbon steel	Galvanized carbon steel	4	Rigid base mount (to 12" curb)	120	120	120	8,130	1.55	UUT2c
All 4 walls in place	Carbon Steel	Aluminum	Aluminum	Aluminum	2	Rigid base mount	150	150	144	8,550	1.33	UUT3a-i
All 4 walls in place	Carbon Steel	Aluminum	Aluminum	Aluminum	2	Rigid base mount	150	150	144	8,550	1.55	UUT3a-ii
Outlet and side walls removed	Carbon Steel	Aluminum	Aluminum	Aluminum	2	Rigid base mount	150	150	144	8,550	1.55	UUT3b
Inlet, outlet and side walls removed	Carbon Steel	Aluminum	Aluminum	Aluminum	2	Rigid base mount	150	150	144	8,550	1.55	UUT3c
All 4 walls in place	Carbon Steel	Galvanized carbon steel	Galvanized carbon steel	Galvanized carbon steel	2	Rigid base mount (to 12" curb)	120	120	120	5,720	2.00	UUT4

Certified Enclosure Sections

Model	Base Material	Exterior Wall Material	Interior Wall Material	Floor Material	Wall Thickness (in)	Mount	Max. Dimensions (in)			Max Loading (psf)	Sds (z/h=1)
							Length	Width	Height		
Enclosure Sections	Carbon Steel	Aluminum or galvanized carbon steel	Aluminum or galvanized carbon steel	Aluminum or galvanized carbon steel	2 or 4[1]	Rigid base mount (with or without 12" curb)	120	120	80	81	1.55[2]
							120	120	120		
							150	150	144		

Notes:

1. Wall thickness for units with maximum loading of 81 psf can be 2" (with aluminum exterior/interior walls and floor), or 4" (with galvanized carbon steel exterior/interior walls and floor).

2. Units are certified for Sds 1.55g, except with internally isolated HPA blowers greater than or equal to 250 lb, which are certified for Sds 1.33 g.

Special Seismic Certification
Certified Subcomponents

DCL Dynamic Certification Laboratories

Manufacturer: Innovent

Product Line: Custom Air Handling Units

Subcomponent: Arrangement, 4 Blowers - QEP

ARRANGEMENT, 4 BLOWERS - QEP

Model	Mfr.	Fan Class	Fan Blade Material	Dimensions (in)			Weight (lb)	Mounting	Sds (g), z/h=1	Unit
				Length	Width	Height				
15-QEP	Greenheck	I	Aluminum	27	25	23	100	Internally isolated	1.55	UUT 2
		II		27	25	23	100	Internally isolated		Interpolated
		III		30	25	23	110	Internally isolated		Interpolated
16-QEP		I		32	27	25	120	Internally isolated		Interpolated
		II		32	27	25	120	Internally isolated		Interpolated
		III		32	27	25	120	Internally isolated		Interpolated
18-QEP		I		34	30	28	180	Internally isolated		Interpolated
		II		34	30	28	180	Internally isolated		Interpolated
		III		34	30	28	185	Internally isolated		Interpolated
20-QEP		I		31	32	30	190	Internally isolated		Interpolated
		II		31	32	30	190	Internally isolated		Interpolated
		III		36	32	30	210	Internally isolated		Interpolated
22-QEP		I		35	34	32	230	Internally isolated		Interpolated
		II		35	34	32	230	Internally isolated		Interpolated
		III		39	34	32	250	Internally isolated		Interpolated
24-QEP		I		37	38	36	270	Internally isolated		Interpolated
		II		37	38	36	270	Internally isolated		Interpolated
		III		41	38	36	290	Internally isolated		Interpolated
27-QEP		I		41	40	38	300	Internally isolated		Interpolated
		II		41	40	38	300	Internally isolated		Interpolated
		III		43	40	38	315	Internally isolated		Interpolated
30-QEP		I		45	45	41	470	Internally isolated		Interpolated
		II		45	45	41	470	Internally isolated		Interpolated
		III		46	45	41	480	Internally isolated		Interpolated
33-QEP		I		50	48	45	550	Internally isolated		Interpolated
		II		50	48	45	550	Internally isolated		Interpolated
		III		50	48	45	550	Internally isolated		Interpolated
36-QEP		I		53	52	49	620	Internally isolated		Interpolated
		II		53	52	49	620	Internally isolated		Interpolated
		III		54	52	49	640	Internally isolated		Interpolated
40-QEP		I		56	56	53	750	Internally isolated		Interpolated
		II		56	56	53	750	Internally isolated		Interpolated
		III		60	56	53	790	Internally isolated		Interpolated
44-QEP		I		62	61	58	1,000	Internally isolated		Interpolated
		II		62	61	58	1,000	Internally isolated		Interpolated
		III		63	61	58	1,050	Internally isolated		Interpolated
49-QEP		I		67	67	63	1,200	Internally isolated		Interpolated
		II		67	67	63	1,200	Internally isolated		Interpolated
		III		67	67	63	1,200	Internally isolated		Interpolated
54-QEP		I		73	73	68	1,500	Internally isolated		Interpolated
		II		73	73	68	1,500	Internally isolated		Interpolated
		III		73	73	68	1,500	Internally isolated	2.00	UUT 1

Special Seismic Certification
Certified Subcomponents

DCL Dynamic Certification Laboratories

Manufacturer: Innovent

Product Line: Custom Air Handling Units

Subcomponent: Arrangement, Blowers - HPA

ARRANGEMENT, BLOWERS - HPA

Fan Size	Mfr.	Housing Size	Fan Blade Material	Dimensions (in)			Weight (lbs)	Mounting	Max Stack Qty	Sds (g), z/h=1	Unit
				Length	Width	Height					
15-HPA	Greenheck	Standard	Aluminum	32	29	29	215	Internally isolated	3	1.55	UUT3a-ii, UUT3b, UUT3c
		Large		37	32	32	250	Internally isolated		1.33	Interpolated
16-HPA		Compact		32	29	29	215	Internally isolated	3		Interpolated
		Standard		37	32	32	250	Internally isolated			Interpolated
		Large		38	34	34	290	Internally isolated			Interpolated
18-HPA		Compact		37	32	32	250	Internally isolated	3		Interpolated
		Standard		38	34	34	290	Internally isolated			Interpolated
		Large		40	37	37	340	Internally isolated			Interpolated
20-HPA		Compact		38	34	34	290	Internally isolated	3		Interpolated
		Standard		40	37	37	340	Internally isolated			Interpolated
		Large		42	41	41	380	Internally isolated			Interpolated
22-HPA		Compact		40	37	37	340	Internally isolated	3		Interpolated
		Standard		42	41	41	380	Internally isolated			Interpolated
		Large		44	45	45	425	Internally isolated			Interpolated
24-HPA		Compact		42	41	41	380	Internally isolated	3		Interpolated
		Standard		44	45	45	425	Internally isolated			Interpolated
		Large		48	49	49	680	Internally isolated			Interpolated
27-HPA		Compact		44	45	45	425	Internally isolated	2		Interpolated
		Standard		48	49	49	680	Internally isolated			Interpolated
		Large		49	54	54	820	Internally isolated			Interpolated
30-HPA		Compact		48	49	49	680	Internally isolated	2		Interpolated
		Standard		49	54	54	820	Internally isolated			Interpolated
		Large		51	59	59	960	Internally isolated			Interpolated
33-HPA		Compact		49	54	54	820	Internally isolated	2		Interpolated
		Standard		51	59	59	960	Internally isolated			Interpolated
		Large		51	65	65	1,100	Internally isolated			Interpolated
36-HPA		Compact		51	59	59	960	Internally isolated	2		Interpolated
		Standard		51	65	65	1,100	Internally isolated			UUT3a-i
36-HPA		Standard		51	65	65	1,100	Rigid mounted	1	1.55	UUT3b, UUT3c

Special Seismic Certification
Certified Subcomponents

DCL Dynamic Certification Laboratories

Manufacturer: Innovent

Product Line: Custom Air Handling Units

Subcomponent: Blower Motors

Motors																									
Motor Frame	Mfr.	Horse Power																		Voltage Certified	Voltage Tested	Material Certified	Material Tested	Max. Weight (lb)	Max. Weight (lb)	Sds (g), z/h=1	Unit
		1/2	1	1-1/2	2	3	5	7-1/2	10	15	20	25	30	40	50	60	75	100								
56	Baldor																			208-230/460	N/A	Powder coated carbon steel or cast iron	N/A	130	130	1.55	Extrapolated
143T	Baldor																			208-230/460	N/A	Powder coated carbon steel or cast iron	N/A	90	90	1.55	Extrapolated
145T	Baldor																			208-230/460	460	Powder coated carbon steel or cast iron	Powder coated carbon steel	130	130	1.55	UUT3a-ii,b,c
182T	Baldor																			208-230/460	208-230	Powder coated carbon steel or cast iron	Powder coated carbon steel	180	180	1.55	UUT2a-c
184T	Baldor																			208-230/460	N/A	Powder coated carbon steel or cast iron	N/A	200	200	1.55	Interpolated
213T	Baldor																			208-230/460	N/A	Powder coated carbon steel or cast iron	N/A	300	300	1.55	Interpolated
215T	Baldor																			208-230/460	N/A	Powder coated carbon steel or cast iron	N/A	330	330	1.55	Interpolated
254T	Baldor																			208-230/460	N/A	Powder coated carbon steel or cast iron	N/A	430	430	1.55	Interpolated
284T	Baldor																			208-230/460	N/A	Powder coated carbon steel or cast iron	N/A	460	460	1.55	Interpolated
286T	Baldor																			208-230/460	N/A	Powder coated carbon steel or cast iron	N/A	630	630	1.55	Interpolated
324T	Baldor																			208-230/460	N/A	Powder coated carbon steel or cast iron	N/A	630	630	1.55	Interpolated
326T	Baldor																			208-230/460	460	Powder coated carbon steel or cast iron	Cast iron	760	760	1.55	UUT3a-ii,b,c
364T	Baldor																			208-230/460	N/A	Powder coated carbon steel or cast iron	N/A	1050	1050	1.55	Interpolated
365T	Baldor																			208-230/460	460	Powder coated carbon steel or cast iron	Cast iron	1175	1175	1.55	UUT1
404T	Baldor																			208-230/460	N/A	Powder coated carbon steel or cast iron	N/A	1050	1050	1.55	Extrapolated
405T	Baldor																			208-230/460	N/A	Powder coated carbon steel or cast iron	N/A	1250	1250	1.55	Extrapolated

Special Seismic Certification
Certified Subcomponents

DCL Dynamic Certification Laboratories

Manufacturer: Innovent

Product Line: Custom Air Handling Units

Subcomponent: Dampers

Tested Dampers							
Model Number	Manufacturer	Height x Width, in.	Depth, in.	Configuration	Description / Material	Sds (g), z/h=1	Unit
VCD-23	Greenheck	12 x 12 and 48 x 74	5	Horizontal	3V blade (16 ga galv. carbon steel)	2.00	UUT 1
VCD-33		24 x 24	5	Horizontal	Airfoil blade (galv. carbon steel)	2.00	UUT 1
VCD-43		60 x 74	5	Horizontal	Aluminum airfoil blade	2.00	UUT 1
EM		8 x 8 and 48 x 74	3.125	Horizontal	Aluminum Backdraft	1.55	UUT 3a-ii, b, c

Certified Dampers							
Model Number	Manufacturer	Height, in.	Width, in.	Depth, in.	Configuration	Description/Material	Sds (g), z/h=1
VCD-18	Greeheck	12- 60	12 - 74	5	Horizontal	3V blade (16 ga galv. carbon steel) or Airfoil blade (galv. carbon steel or aluminum)	2.00
VCD-23							
VCD-33							
VCD-43							
EM	Greeheck	8- 48	8 - 74	3.125	Horizontal	Aluminum Backdraft	1.55

Special Seismic Certification
Certified Subcomponents

DCL Dynamic Certification Laboratories

Manufacturer: Innovent

Product Line: Custom Air Handling Units

Subcomponent: Damper Actuators

Damper Actuators							
Model	Manufacturer	Type	Torque (lb-in)	Voltage	Description / Material	Sds (g), z/h=1	Unit
ML	Honeywell	Spring return, direct coupled	20	24	Aluminum Drive Housing, Plastic Enclosure, Steel/Stainless Steel Drive Components	2.00	UUT 1
MS or ML		Spring return, direct coupled	20 - 175	24			Interpolated
MS		Spring return, direct coupled	175	24			UUT 1

Special Seismic Certification
Certified Subcomponents

DCL Dynamic Certification Laboratories

Manufacturer: Innovent

Product Line: Custom Air Handling Units

Subcomponent: Coils

Tested Coils - Precision Coils

Coil Type	Manufacturer	Coil Height (in)*	Coil Length (in)*	Row Qty	Tube Thick (in)	Fins Per Inch	Fin Material	Case Material	Header Material	Tube Material	Fin Thick (in)	Sds (g), z/h=1	Unit
DX	Precision Coils	96	48	6	0.02	8	Al	Galvanized carbon steel	Copper	Copper	0.008	1.55	UUT2
CW		80	40	12	0.02	14	Al		Carbon steel	Copper	0.006	2.00	UUT1
HW		24	140	1	0.02	14	Cu		Copper	Copper	0.006	1.55	UUT3a-ii,b,c
CR		90	90	4	0.016	16	Al		Copper	Copper	0.006	2.00	UUT4
CR		36	24	8	0.035	6	Al		Copper	Copper	0.008	2.00	UUT4

Certified Coils - Precision Coils

Coil Type	Manufacturer	Coil Height (in)*	Coil Length (in)*	Row Qty	Tube Thick (in)	Fins Per Inch	Fin Material	Case Material	Header Material	Tube Material	Fin Thick (in)	Sds (g), z/h=1
DX, CW, HW, CR	Precision Coils	24 - 96	24 - 140	1 - 12	0.016 - 0.035	6 - 16	Al or Cu	Galvanized carbon steel	Copper or carbon steel	Copper	0.006 - 0.010	1.55

*Dimensions are for the coil airflow face area and do not include the casing.

Tested Coils - Alcoil

Coil Type	Manufacturer	Coil Height (in)	Coil Length (in)	Depth (in)	Header Dia. (in)	Fins Per Inch	Fin Material	Case Material	Header Material	Tube Material	Fin Thick (in)	Sds (g), z/h=1	Unit
CR	Alcoil	74	36	2	1.25	24	Al	N/A	Aluminum	N/A	0.010	2.00	UUT4
CR		76	48	2	1.25	24	Al	N/A	Aluminum	N/A	0.010	2.00	UUT4

Certified Coils - Alcoil

Coil Type	Manufacturer	Coil Height (in)	Coil Length (in)	Depth (in)	Header Dia. (in)	Fins Per Inch	Fin Material	Case Material	Header Material	Tube Material	Fin Thick (in)	Sds (g), z/h=1
CR	Alcoil	67 - 76	32 - 48	2	0.83 - 1.25	24	Al	N/A	Aluminum	N/A	0.006 - 0.010	2.00

Note: Alcoil fins are louvered

Special Seismic Certification
Certified Subcomponents

DCL Dynamic Certification Laboratories

Manufacturer: Innovent

Product Line: Custom Air Handling Units

Subcomponent: Variable frequency drives

Variable Frequency Drives									
Model Number (Type J1000)	Manufacturer	Rated Input Voltage	Rated Output Current (Amps)	Nominal HP	Dimensions (in)			Sds (g), z/h=1	Unit
					Height	Width	Depth		
BA0001BAA	Yaskawa	200-240V 1-Phase	1.2	1/8	5.0	2.7	3.0	2.00	Extrapolated
				1/4					Extrapolated
BA0002BAA			1.9	1/4	5.0	2.7	3.0		Extrapolated
BA0003BAA			3.3	1/2	5.0	2.7	4.7		Extrapolated
				3/4					Extrapolated
BA0006BAA			6.0	1.0	5.0	4.3	5.4		Extrapolated
				1.5					Extrapolated
BA0010BAA			9.6	2.0	5.0	4.3	6.1		UUT 4
				3.0					Interpolated
2A0001BAA		200-240V 3-Phase	1.2	1/8	5.0	2.7	3.0		Interpolated
				1/4					Interpolated
2A0002BAA			1.9	1/4	5.0	2.7	3.0		Interpolated
2A0004BAA			3.5	1/2	5.0	2.7	4.3		Interpolated
				3/4					Interpolated
2A0006BAA			6.0	1.0	5.0	2.7	5.0		Interpolated
				1.5					Interpolated
2A0010BAA			9.6	2.0	5.0	4.3	5.1		Interpolated
				3.0					Interpolated
2A0012BAA			12.0	3.0	5.0	4.3	5.4		Interpolated
2A0020BAA			19.6	5.0	5.0	5.5	5.6		Interpolated
4A0001BAA		380-480V 3-Phase	1.2	1/2	5.0	4.3	3.2		Interpolated
4A0002BAA			2.1	3/4	5.0	4.3	3.9		Interpolated
				1.0					Interpolated
4A0004BAA			4.1	2.0	5.0	4.3	5.4		Interpolated
4A0005BAA			5.4	3.0	5.0	4.3	6.1		Interpolated
4A0007BAA			6.9	4.0	5.0	4.3	6.1		Interpolated
4A0009BAA			8.8	5.0	5.0	4.3	6.1		Interpolated
4A0011BAA			11.1	7.5	5.0	5.5	5.6		UUT 4

Special Seismic Certification
Certified Subcomponents

DCL Dynamic Certification Laboratories

Manufacturer: Innovent

Product Line: Custom Air Handling Units

Subcomponent: Variable frequency drives

Variable Frequency Drives

Model Number	Manufacturer	Rated Input Voltage	Rated Output Current (Amps)	Nominal HP	Dimensions (in)			Sds (g), z/h=1	Unit
					Height	Width	Depth		
0011FAA	Yaskawa, Type Z1000	200-240V 3-Phase	10.6	3	14.1	4.9	8.6	1.55	UUT 2a-c
0017FAA			16.7	5					Interpolated
0024FAA			24.2	7.5	17.6		9.2		Interpolated
0031FAA			30.8	10					Interpolated
0046FAA			46.2	15	20.1	7.9	9.4		Interpolated
0059FAA			59.4	20					Interpolated
0075FAA			74.8	25	21.3	10.0	10.3		Interpolated
0088FAA			88	30					Interpolated
0114FAA			114	40					Interpolated
0143FAA			143	50	30.5	13.4	15.7		Interpolated
0169FAA			169	60					Interpolated
0211FAA			211	75					Interpolated
0273FAA			273	100				2.00	UUT 1
0343AAA			343	125	31.5	19.7	13.8	1.55	Extrapolated
0396AAA			196	150				1.55	Extrapolated
0005FAA		380-480V 3-Phase	4.8	3	14.1	4.9	8.6	1.55	UUT 3a-ii,b,c
0008FAA			7.6	5					Interpolated
0011FAA			11	7.5					Interpolated
0014FAA			14	10	17.6		9.2		Interpolated
0021FAA			21	15					Interpolated
0027FAA			27	20					Interpolated
0034FAA			34	25	20.1	7.9	9.4		Interpolated
0040FAA			40	30					Interpolated
0052FAA			52	40	21.3	10.0	10.3		Interpolated
0065FAA			65	50					Interpolated
0077FAA			77	60					Interpolated
0096FAA			96	75					Interpolated
0124FAA			124	100	27.6	11.8	11.4		UUT 3a-ii,b,c

Special Seismic Certification
Certified Subcomponents

DCL Dynamic Certification Laboratories

Manufacturer: Innovent

Product Line: Custom Air Handling Units

Subcomponent: Electrical and variable frequency drive enclosures

Electrical & Variable Frequency Drive Enclosures

Model	Manufacturer	Material	NEMA Rating	Dimensions (in)			Weight (lb)	Sds (g), z/h=1	Unit
				Height	Width	Depth			
SCE-12R1206LP	Saginaw Control and Engineering	Powder-coated carbon steel	3R	12	12	6	12	2.00	UUT 4
SCE-12R1208LP			3R	12	12	8	14	1.55	Interpolated
SCE-16R1206LP			3R	16	12	6	16		Interpolated
SCE-16R1208LP			3R	16	12	8	19		Interpolated
SCE-20R1606LP			3R	20	16	6	20		Interpolated
SCE-20R1608LP			3R	20	16	8	25		Interpolated
SCE-24R2006LP			3R	24	20	6	28		Interpolated
SCE-24R2008LP			3R	24	20	8	32		Interpolated
SCE-24R2012LP			3R	24	20	12	35		Interpolated
SCE-24R2016LP			3R	24	20	16	42		Interpolated
SCE-30R2408LP			3R	30	24	8	60		Interpolated
SCE-30R2412LP			3R	30	24	12	64		Interpolated
SCE-30R2416LP			3R	30	24	16	58		Interpolated
SCE-36R2408LP			3R	36	24	8	62		Interpolated
SCE-36R2412LP			3R	36	24	12	73		Interpolated
SCE-36R2416LP			3R	36	24	16	77		Interpolated
SCE-36R3008LP			3R	36	30	8	70		Interpolated
SCE-36R3012LP			3R	36	30	12	85		Interpolated
SCE-36R3016LP			3R	36	30	16	89		Interpolated
SCE-42R3012LP			3R	42	30	12	114		Interpolated
SCE-42R3016LP			3R	42	30	16	104		UUT 2a-c
SCE-12EL1206LP	Saginaw Control and Engineering	Powder-coated carbon steel	4, 12, 13	12	12	6	14	2.00	UUT 4
SCE-12EL2406LP			4, 12, 13	12	24	6	28	1.55	Interpolated
SCE-16EL1206LP			4, 12, 13	16	12	6	17		Interpolated
SCE-16EL1208LP			4, 12, 13	16	12	8	21		Interpolated
SCE-16EL1408LP			4, 12, 13	16	14	8	20		Interpolated
SCE-16EL1606LP			4, 12, 13	16	16	6	21		Interpolated
SCE-16EL1608LP			4, 12, 13	16	16	8	26		Interpolated
SCE-16EL2006LP			4, 12, 13	16	20	6	27		Interpolated
SCE-16EL2008LP			4, 12, 13	16	20	8	27		Interpolated
SCE-20EL1206LP			4, 12, 13	20	12	6	22		Interpolated
SCE-20EL1606LP			4, 12, 13	20	16	6	24		Interpolated
SCE-20EL1608LP			4, 12, 13	20	16	8	27		Interpolated
SCE-20EL1612LP			4, 12, 13	20	16	12	41		Interpolated
SCE-20EL2006LP			4, 12, 13	20	20	6	29		Interpolated
SCE-20EL2008LP			4, 12, 13	20	20	8	31		Interpolated
SCE-20EL2012LP			4, 12, 13	20	20	12	37		Interpolated
SCE-20EL2408LP			4, 12, 13	20	24	8	35		Interpolated
SCE-24EL1206LP			4, 12, 13	24	12	6	24		Interpolated
SCE-24EL1606LP			4, 12, 13	24	16	6	31		Interpolated
SCE-24EL1608LP			4, 12, 13	24	16	8	30		Interpolated

Continued on the Next Page

Special Seismic Certification
Certified Subcomponents

DCL Dynamic Certification Laboratories

Manufacturer: Innovent

Product Line: Custom Air Handling Units

Subcomponent: Electrical and variable frequency drive enclosures

Electrical & Variable Frequency Drive Enclosures

Model	Manufacturer	Material	NEMA Rating	Dimensions (in)			Weight (lb)	Sds (g), z/h=1	Unit
				Height	Width	Depth			
Continued from the Previous Page									
SCE-24EL2006LP	Saginaw Control and Engineering	Powder-coated carbon steel	4, 12, 13	24	20	6	42	1.55	Interpolated
SCE-24EL2008LP			4, 12, 13	24	20	8	35		Interpolated
SCE-24EL2010LP			4, 12, 13	24	20	10	37		Interpolated
SCE-24EL2012LP			4, 12, 13	24	20	12	52		Interpolated
SCE-24EL2016LP			4, 12, 13	24	20	16	61		Interpolated
SCE-24EL2406LP			4, 12, 13	24	24	6	46		Interpolated
SCE-24EL2408LP			4, 12, 13	24	24	8	43		Interpolated
SCE-24EL2410LP			4, 12, 13	24	24	10	54		Interpolated
SCE-24EL2412LP			4, 12, 13	24	24	12	51		Interpolated
SCE-24EL2416LP			4, 12, 13	24	24	16	71		Interpolated
SCE-24EL3008LP			4, 12, 13	24	30	8	53		Interpolated
SCE-24EL3010LP			4, 12, 13	24	30	10	63		Interpolated
SCE-30EL1606LP			4, 12, 13	30	16	6	42		Interpolated
SCE-30EL2008LP			4, 12, 13	30	20	8	47		Interpolated
SCE-30EL2010LP			4, 12, 13	30	20	10	50		Interpolated
SCE-30EL2408LP			4, 12, 13	30	24	8	55		Interpolated
SCE-30EL2410LP			4, 12, 13	30	24	10	68		Interpolated
SCE-30EL2412LP			4, 12, 13	30	24	12	63		Interpolated
SCE-30EL2416LP			4, 12, 13	30	24	16	80		Interpolated
SCE-30EL2420LP			4, 12, 13	30	24	20	91		Interpolated
SCE-30EL2424LP			4, 12, 13	30	24	24	99		Interpolated
SCE-30EL3008LP			4, 12, 13	30	30	8	63		Interpolated
SCE-30EL3010LP			4, 12, 13	30	30	10	82		Interpolated
SCE-30EL3012LP			4, 12, 13	30	30	12	82		Interpolated
SCE-30EL3608LP			4, 12, 13	30	36	8	84		Interpolated
SCE-36EL2408LP			4, 12, 13	36	24	8	64		Interpolated
SCE-36EL2410LP			4, 12, 13	36	24	10	74		Interpolated
SCE-36EL2412LP			4, 12, 13	36	24	12	77		Interpolated
SCE-36EL2416LP			4, 12, 13	36	24	16	82		Interpolated
SCE-36EL3008LP			4, 12, 13	36	30	8	73		Interpolated
SCE-36EL3010LP			4, 12, 13	36	30	10	89		Interpolated
SCE-36EL3012LP			4, 12, 13	36	30	12	87		Interpolated
SCE-36EL3016LP			4, 12, 13	36	30	16	114		Interpolated
SCE-36EL3020LP			4, 12, 13	36	30	20	123		Interpolated
SCE-36EL3608LP			4, 12, 13	36	36	8	102		Interpolated
SCE-36EL3612LP			4, 12, 13	36	36	12	111		Interpolated
SCE-36EL3616LP			4, 12, 13	36	36	16	122		Interpolated
SCE-40EL2412LP			4, 12, 13	40	24	12	89		Interpolated
SCE-42EL2410LP			4, 12, 13	42	24	10	79		Interpolated
SCE-42EL3008LP			4, 12, 13	42	30	8	101		Interpolated

Continued on the Next Page

Special Seismic Certification
Certified Subcomponents

DCL Dynamic Certification Laboratories

Manufacturer: Innovent

Product Line: Custom Air Handling Units

Subcomponent: Electrical and variable frequency drive enclosures

Electrical & Variable Frequency Drive Enclosures									
Model	Manufacturer	Material	NEMA Rating	Dimensions (in)			Weight (lb)	Sds (g), z/h=1	Unit
				Height	Width	Depth			
Continued from the Previous Page									
SCE-42EL3010LP	Saginaw Control and Engineering	Powder-coated carbon steel	4, 12, 13	42	30	10	105	1.55	Interpolated
SCE-42EL3012LP			4, 12, 13	42	30	12	111		Interpolated
SCE-42EL3016LP			4, 12, 13	42	30	16	117		Interpolated
SCE-42EL3608LP			4, 12, 13	42	36	8	117		Interpolated
SCE-42EL3610LP			4, 12, 13	42	36	10	127		Interpolated
SCE-42EL3612LP			4, 12, 13	42	36	12	123		Interpolated
SCE-42EL3616LP			4, 12, 13	42	36	16	149		Interpolated
SCE-48EL2408LP			4, 12, 13	48	24	8	83		Interpolated
SCE-48EL2412LP			4, 12, 13	48	24	12	99		Interpolated
SCE-48EL3010LP			4, 12, 13	48	30	10	117		Interpolated
SCE-48EL3016LP			4, 12, 13	48	30	16	151		Interpolated
SCE-48EL3608LP			4, 12, 13	48	36	8	129		Interpolated
SCE-48EL3610LP			4, 12, 13	48	36	10	137		Interpolated
SCE-48EL3612LP			4, 12, 13	48	36	12	133		Interpolated
SCE-48EL3616LP			4, 12, 13	48	36	16	149		Interpolated
SCE-48EL3620LP			4, 12, 13	48	36	20	173		Interpolated
SCE-60EL2412LP			4, 12, 13	60	24	12	141		Interpolated
SCE-60EL3610LP			4, 12, 13	60	36	10	164		Interpolated
SCE-60EL3612LP			4, 12, 13	60	36	12	162		Interpolated
SCE-60EL3616LP			4, 12, 13	60	36	16	195		Interpolated
SCE-60EL3620LP			4, 12, 13	60	36	20	209		Interpolated
SCE-72EL3012LP			4, 12, 13	72	30	12	217		Interpolated
SCE-72EL3016LP			4, 12, 13	72	30	16	236		Interpolated
SCE-72EL3024LP			4, 12, 13	72	30	24	242		Interpolated
SCE-72EL3612LP			4, 12, 13	72	36	12	222		Interpolated
SCE-72EL3616LP			4, 12, 13	72	36	16	234	2.00	UUT 1

Special Seismic Certification
Certified Subcomponents

DCL Dynamic Certification Laboratories

Manufacturer: Innovent

Product Line: Custom Air Handling Units

Subcomponent: Indirect fired furnaces

Indirect Fired Furnaces									
Model	Manufacturer	Material	Input Rate (MBH)	Dimensions (in)			Weight (lb)	Sds (g), z/h=1	Unit
				Depth	Height	Width			
HMA180	Heatco	Stainless steel tubes	180	57.5	19.0	28.4	106	1.55	UUT 2a-c
HMB180			180	86.2	17.4	20.7	97		Interpolated
HMA200			200	57.5	19.0	28.4	106		Interpolated
HMB200			200	86.2	17.4	20.7	97		Interpolated
HMA250			250	57.5	22.2	28.4	127		Interpolated
HMB250			250	86.2	17.4	23.9	116		Interpolated
HMA300			300	57.5	25.5	28.4	147		Interpolated
HMB300			300	86.2	17.4	27.2	131		Interpolated
HMA350			350	57.5	28.7	28.4	166		Interpolated
HMB350			350	86.2	17.4	30.4	147		Interpolated
HMA400			400	57.5	32.0	28.4	188		Interpolated
HNM400			400	86.2	17.4	33.7	166		Interpolated
HMA500			500	64.0	38.5	28.4	235		Interpolated
HMB500			500	96.0	22.0	39.9	235		Interpolated
HMA600			600	64.0	45.4	28.4	255		Interpolated
HMB600			600	96.0	22.0	46.4	255		UUT 2a-c

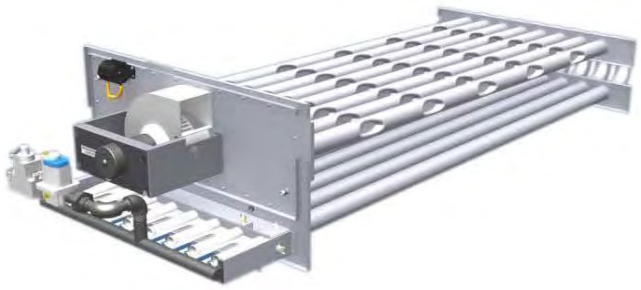

Type HMB

Type HMA

Special Seismic Certification
Certified Subcomponents

DCL Dynamic Certification Laboratories

Manufacturer: Innovent

Product Line: Custom Air Handling Units

Subcomponent: Compressors

COMPRESSORS								
Model	Manufacturer	Material	Dimensions (in)			Weight (lb)	Sds (g), z/h=1	Unit
			Length	Width	Height			
ZP26	Copeland	Coated carbon steel shell, copper coated steel fluid connections	9.57	9.57	15.00	60	2.00	UUT 4
ZP32			9.57	9.57	15.86	62		Interpolated
ZP36			9.57	9.57	16.50	67		Interpolated
ZP38			9.57	9.57	15.96	66		Interpolated
ZP41			9.57	9.57	15.96	65		Interpolated
ZP44			9.57	9.57	15.11	65		Interpolated
ZP50			9.63	9.82	18.16	87		Interpolated
ZP54			9.63	9.82	18.16	84		Interpolated
ZP57			9.63	9.82	18.16	92		Interpolated
ZP61			9.63	9.82	18.16	89		Interpolated
ZP67			9.63	9.82	18.16	88		Interpolated
ZP72			9.63	9.82	18.16	88		Interpolated
ZP83			9.63	9.82	18.16	87		Interpolated
ZP91			9.57	9.77	18.20	90		Interpolated
ZP103			10.36	11.23	21.75	135		Interpolated
ZP120			10.36	11.23	21.75	135		Interpolated
ZP137			10.36	11.23	21.75	137		Interpolated
ZP154			10.36	11.23	23.03	143		Interpolated
ZP182			10.36	11.23	23.03	145		Interpolated
ZP235			16.80	14.80	29.00	310		Interpolated
ZP295			17.60	15.37	28.90	353		Interpolated
ZP385			17.60	16.80	28.90	390		UUT 4
VZH088-G	Danfoss	Coated carbon steel shell, copper coated steel fluid connections	8.82	8.82	18.49	58	2.00	UUT 4
VZH117-G			8.82	8.82	20.76	64		Interpolated
VZH170-G			10.47	10.47	25.94	105		UUT 4

Special Seismic Certification
Certified Subcomponents

DCL Dynamic Certification Laboratories

Manufacturer: Innovent

Product Line: Custom Air Handling Units

Subcomponent: Condensing Fans

CONDENSING FANS						
Model	Manufacturer	Material	Fan Diameter (in)	Weight (lb)	Sds (g), z/h=1	Unit
CSE1-20-432	Greenheck Fan Corporation	Galvanized carbon steel blade and mount structure, aluminum hub	20	54	2.00	UUT 4
CSE1-24-428			24	64		Interpolated
CSE1-24-436			24	68		Interpolated
CSE1-30-430			30	90		UUT 4
FN063	Ziehl Abegg	Composite blade, stainless steel mount structure and hub	25	53	2.00	UUT 4
FN071			28	88		Interpolated
FN080			31	112		UUT 4

Special Seismic Certification
Certified Subcomponents

DCL Dynamic Certification Laboratories

Manufacturer: Innovent

Product Line: Custom Air Handling Units

Subcomponent: Energy recovery wheels

ENERGY RECOVERY WHEELS								
Model	Manufacturer	Material	Dimensions (in)			Weight (lb)	Sds (g), z/h=1	Unit
			Width	Height	Depth			
TAC-24	Rotorsource	Coated aluminum (wheel media), aluminum (wheel enclosure), stainless steel frame	26	26	7	94	1.55	UUT 2a-c
TAC-30			34	34	7	128		Interpolated
TAC-36			40	40	7	167		Interpolated
TAC-42			46	46	7	213		Interpolated
TAC-48			52	52	7	267		Interpolated
TAC-54			58	58	7	325		Interpolated
TAC-60			64	64	12	387		Interpolated
TAC-66			70	70	12	454		Interpolated
TAC-78			82	82	12	683		Interpolated
TAC-84			88	88	12	773		Interpolated
TAC-90			94	94	12	868		Interpolated
TAC-96			104	104	17	969		UUT 2a-c

Special Seismic Certification
Tested Units

DCL Dynamic Certification Laboratories

Manufacturer: Innovent Air

Product Line: Custom Air Handling Units

Tested Product Construction: Carbon steel base with galvanized carbon steel or aluminum exterior and interior wall panels and floor

Tested Options: 2-100HP direct drive fans, dampers, coils, VFDs, controller, furnace, compressors, condensing unit and energy wheels

Tested Mounting Description: Rigid base mount (with or without curb)

Description	Base Material	Exterior Wall Material	Interior Wall Material	Floor Material	Wall Thickness (in)	Mount	Dimensions (inches)			Maximum Operating Weight (lb)	Sds (z/h=1)	UUT
							Depth	Width	Height			
All 4 walls in place	Carbon Steel	Aluminum	Aluminum	Galvanized carbon steel	2	Rigid base mount (to 12"curb)	120	120	80	5,950	2.00	UUT1
All 4 walls in place		Galvanized carbon steel	Galvanized carbon steel	Galvanized carbon steel	4	Rigid base mount (to 12"curb)	120	120	120	8,130	1.55	UUT2a
Outlet wall removed							120	120	120		1.55	UUT2b
Inlet and outlet walls removed							120	120	120		1.55	UUT2c
All 4 walls in place		Aluminum	Aluminum	Aluminum	2	Rigid base mount	150	150	144	8,550	1.33	UUT3a-i
All 4 walls in place							150	150	144		1.55	UUT3a-ii
Outlet and side walls removed							150	150	144		1.55	UUT3b
Inlet, outlet and side walls removed							150	150	144		1.55	UUT3c
All 4 walls in place		Galvanized carbon steel	Galvanized carbon steel	Galvanized carbon steel	2	Rigid base mount (to 12"curb)	120	120	120	5,720	2.00	UUT4

UUT1

UNIT UNDER TEST (UUT) Summary Sheet

DCL Dynamic Certification Laboratories

Manufacturer: Innovent

Product Line: Custom air handling units

Serial Number: 2084740.0020

Product Construction Summary:
Carbon steel base with aluminum exterior and interior wall panels and galvanized carbon steel floor

Options / Component Summary:
Unit tested with all four walls in place. Unit contained a 4 blower QEP fan arrangement, dampers, cold water coils, 100 HP VFD and NEMA 4/12/13 control enclosure.

Note: The UUT was operational before and after shaking and was full of operating content during the tests. The structural integrity of the component and attachment system and force-resisting systems was maintained.

UUT Properties

Operating Weight (lb)	Dimensions (in)				Lowest Natural Frequency (Hz)		
		Depth	Width	Height	Front-Back	Side-Side	Vertical
5,950	UUT1	120	120	80	2.3	5.8	4.0

Seismic Test Parameters

Building Code	Test Criteria	Sds (g)	z/h	Ip	Aflx-H (g)	Arig-H (g)	Aflx-V (g)	Arig-V (g)
CBC 2013	2012 ICC-ES AC156	2.0	1.0	1.5	3.20	2.40	1.33	0.53

Unit Mounting Description:

UUT1 was attached to its 12-inch curb with manufacturer-provided clips and nine #14 screws per the top and bottom of each clip. Four clips were used per each side of the unit, and were evenly spaced across each side. The curb was attached to the shake table interface fixture with seven 1/2-inch diameter Grade 5 bolts per each side of the unit at 15-inches on-center, maximum.

UUT2a

UNIT UNDER TEST (UUT) Summary Sheet

DCL Dynamic Certification Laboratories

Manufacturer: Innovent

Product Line: Custom air handling units

Serial Number: 2084740.0043

Product Construction Summary:

Carbon steel base with galvanized carbon steel exterior and interior wall panels and galvanized carbon steel floor

Options / Component Summary:

Unit tested with all four walls in place. Unit contained a 4 blower QEP fan arrangement, DX coils, 3 HP VFD and NEMA 3R control enclosure, indirect fired furnaces and energy recovery wheels.

Note: The UUT was operational before and after shaking and was full of operating content during the tests. The structural integrity of the component and attachment system and force-resisting systems was maintained.

UUT Properties

Operating Weight (lb)*	Dimensions (in)				Lowest Natural Frequency (Hz)		
		Depth	Width	Height	Front-Back	Side-Side	Vertical
8,130	UUT2a	120	120	120	2.3	2.8	7.8

Seismic Test Parameters

Building Code	Test Criteria	Sds (g)	z/h	Ip	Aflx-H (g)	Arig-H (g)	Aflx-V (g)	Arig-V (g)
CBC 2013	2012 ICC-ES AC156	1.55	1.0	1.5	2.48	1.86	1.03	0.41

*Operating weight is for all four walls in place

Unit Mounting Description:

UUT2a was attached to its 12-inch curb with manufacturer-provided clips and nine #14 screws per the top and bottom of each clip. Four clips were used per each side of the unit, and were evenly spaced across each side. The curb was attached to the shake table interface fixture with seven 1/2-inch diameter Grade 5 bolts per each side of the unit at 15-inches on-center, maximum.

UUT2b

UNIT UNDER TEST (UUT) Summary Sheet

DCL Dynamic Certification Laboratories

Manufacturer: Innovent

Product Line: Custom air handling units

Serial Number: 2084740.0043

Product Construction Summary:

Carbon steel base with galvanized carbon steel exterior and interior wall panels and galvanized carbon steel floor

Options / Component Summary:

Outlet wall removed. Unit contained a 4 blower QEP fan arrangement, DX coils, 3 HP VFD and NEMA 3R control enclosure, indirect fired furnaces and energy recovery wheels.

Note: The UUT was operational before and after shaking and was full of operating content during the tests. The structural integrity of the component and attachment system and force-resisting systems was maintained.

UUT Properties

Operating Weight (lb)*	Dimensions (in)				Lowest Natural Frequency (Hz)		
		Depth	Width	Height	Front-Back	Side-Side	Vertical
8,130	UUT2b	120	120	120	2.5	2.8	8.0

Seismic Test Parameters

Building Code	Test Criteria	Sds (g)	z/h	Ip	Aflx-H (g)	Arig-H (g)	Aflx-V (g)	Arig-V (g)
CBC 2013	2012 ICC-ES AC156	1.55	1.0	1.5	2.48	1.86	1.03	0.41

*Operating weight is for all four walls in place

Unit Mounting Description:

UUT2b was attached to its 12-inch curb with manufacturer-provided clips and nine #14 screws per the top and bottom of each clip. Four clips were used per each side of the unit, and were evenly spaced across each side. The curb was attached to the shake table interface fixture with seven 1/2-inch diameter Grade 5 bolts per each side of the unit at 15-inches on-center, maximum.

UUT2c

UNIT UNDER TEST (UUT) Summary Sheet

DCL Dynamic Certification Laboratories

Manufacturer: Innovent

Product Line: Custom air handling units

Serial Number: 2084740.0043

Product Construction Summary:

Carbon steel base with galvanized carbon steel exterior and interior wall panels and galvanized carbon steel floor

Options / Component Summary:

Inlet and outlet walls removed. Unit contained a 4 blower QEP fan arrangement, DX coils, 3 HP VFD and NEMA 3R control enclosure, indirect fired furnaces and energy recovery wheels.

Note: The UUT was operational before and after shaking and was full of operating content during the tests. The structural integrity of the component and attachment system and force-resisting systems was maintained.

UUT Properties

Operating Weight (lb)*	Dimensions (in)				Lowest Natural Frequency (Hz)		
		Depth	Width	Height	Front-Back	Side-Side	Vertical
8,130	UUT2c	120	120	120	2.8	3.0	8.8

Seismic Test Parameters

Building Code	Test Criteria	Sds (g)	z/h	Ip	Aflx-H (g)	Arig-H (g)	Aflx-V (g)	Arig-V (g)
CBC 2013	2012 ICC-ES AC156	1.55	1.0	1.5	2.48	1.86	1.03	0.41

*Operating weight is for all four walls in place

Unit Mounting Description:

UUT2c was attached to its 12-inch curb with manufacturer-provided clips and nine #14 screws per the top and bottom of each clip. Four clips were used per each side of the unit, and were evenly spaced across each side. The curb was attached to the shake table interface fixture with seven 1/2-inch diameter Grade 5 bolts per each side of the unit at 15-inches on-center, maximum.

UUT3a-i

UNIT UNDER TEST (UUT) Summary Sheet

DCL Dynamic Certification Laboratories

Manufacturer: Innovent

Product Line: Custom air handling units

Serial Number: 2084740.0080

Product Construction Summary:

Carbon steel base with aluminum exterior and interior wall panels and aluminum floor

Options / Component Summary:

Unit tested with all four walls in place. Unit contained HPA blowers, dampers, damper actuators, hot water coils, 3 HP VFD and 100 HP VFD.

Note: The UUT was operational before and after shaking and was full of operating content during the tests. The structural integrity of the component and attachment system and force-resisting systems was maintained.

UUT Properties

Operating Weight (lb)*	Dimensions (in)				Lowest Natural Frequency (Hz)		
		Depth	Width	Height	Front-Back	Side-Side	Vertical
8,550	UUT3a-i	150	150	144	3.0	2.8	10.8

Seismic Test Parameters

Building Code	Test Criteria	Sds (g)	z/h	Ip	Aflx-H (g)	Arig-H (g)	Aflx-V (g)	Arig-V (g)
CBC 2013	2012 ICC-ES AC156	1.33	1.0	1.5	2.13	1.60	0.89	0.35

*Operating weight is for all four walls in place

Unit Mounting Description:

UUT3a-i was rigid base-mounted to the shake table interface frame with manufacturer-provided clips. The clips were attached to the unit's base rail with nine #14 screws at the top of the clip. The clips were attached to the shake table interface frame with three 3/8-inch diameter Grade 5 bolts per clip. Four clips were used per each side of the unit, and were evenly spaced across each side.

UUT3a-ii

UNIT UNDER TEST (UUT) Summary Sheet

DCL Dynamic Certification Laboratories

Manufacturer: Innovent

Product Line: Custom air handling units

Serial Number: 2084740.0080

Product Construction Summary:

Carbon steel base with aluminum exterior and interior wall panels and aluminum floor

Options / Component Summary:

Unit tested with all four walls in place. Unit contained HPA blowers, dampers, damper actuators, hot water coils, 3 HP VFD and 100 HP VFD.

Note: The UUT was operational before and after shaking and was full of operating content during the tests. The structural integrity of the component and attachment system and force-resisting systems was maintained.

UUT Properties

Operating Weight (lb)*	Dimensions (in)				Lowest Natural Frequency (Hz)		
		Depth	Width	Height	Front-Back	Side-Side	Vertical
8,550	UUT3a-ii	150	150	144	3.0	2.8	10.8

Seismic Test Parameters

Building Code	Test Criteria	Sds (g)	z/h	Ip	Aflx-H (g)	Arig-H (g)	Aflx-V (g)	Arig-V (g)
CBC 2013	2012 ICC-ES AC156	1.55	1.0	1.5	2.48	1.86	1.03	0.41

*Operating weight is for all four walls in place

Unit Mounting Description:

UUT3a-ii was rigid base-mounted to the shake table interface frame with manufacturer-provided clips. The clips were attached to the unit's base rail with nine #14 screws at the top of the clip. The clips were attached to the shake table interface frame with three 3/8-inch diameter Grade 5 bolts per clip. Four clips were used per each side of the unit, and were evenly spaced across each side.

UUT3b

UNIT UNDER TEST (UUT) Summary Sheet

DCL Dynamic Certification Laboratories

Manufacturer: Innovent

Product Line: Custom air handling units

Serial Number: 2084740.0080

Product Construction Summary:

Carbon steel base with aluminum exterior and interior wall panels and aluminum floor

Options / Component Summary:

Outlet and side walls removed. Unit contained HPA blowers, dampers, damper actuators, hot water coils, 3 HP VFD and 100 HP VFD.

Note: The UUT was operational before and after shaking and was full of operating content during the tests. The structural integrity of the component and attachment system and force-resisting systems was maintained.

UUT Properties

Operating Weight (lb)*	Dimensions (in)				Lowest Natural Frequency (Hz)		
		Depth	Width	Height	Front-Back	Side-Side	Vertical
8,550	UUT3b	150	150	144	3.8	3.5	10.5

Seismic Test Parameters

Building Code	Test Criteria	Sds (g)	z/h	Ip	Aflx-H (g)	Arig-H (g)	Aflx-V (g)	Arig-V (g)
CBC 2013	2012 ICC-ES AC156	1.55	1.0	1.5	2.48	1.86	1.03	0.41

*Operating weight is for all four walls in place

Unit Mounting Description:

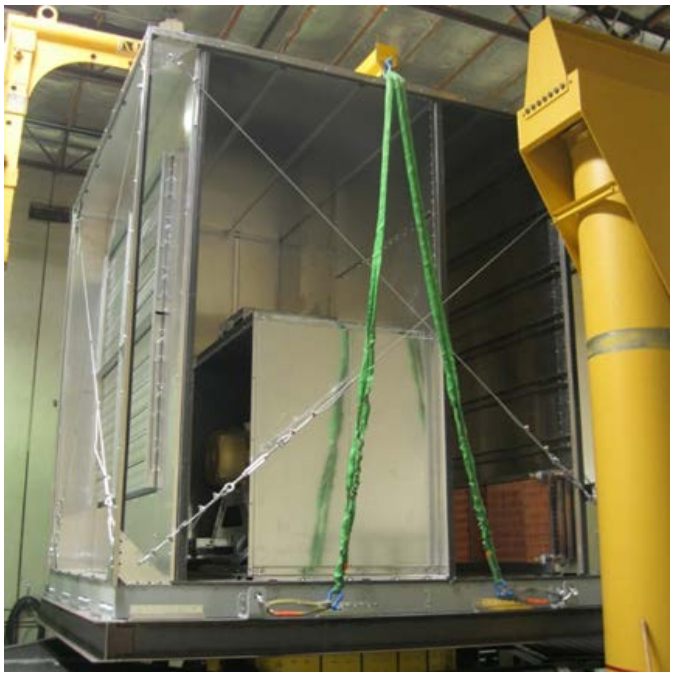

UUT3b was rigid base-mounted to the shake table interface frame with manufacturer-provided clips. The clips were attached to the unit's base rail with nine #14 screws at the top of the clip. The clips were attached to the shake table interface frame with three 3/8-inch diameter Grade 5 bolts per clip. Four clips were used per each side of the unit, and were evenly spaced across each side.

UUT3c

UNIT UNDER TEST (UUT) Summary Sheet

DCL Dynamic Certification Laboratories

Manufacturer: Innovent

Product Line: Custom air handling units

Serial Number: 2084740.0080

Product Construction Summary:

Carbon steel base with aluminum exterior and interior wall panels and aluminum floor

Options / Component Summary:

Inlet, outlet and side walls removed. Unit contained HPA fans, dampers, damper actuators, hot water coils, 3 HP VFD and 100 HP VFD.

Note: The UUT was operational before and after shaking and was full of operating content during the tests. The structural integrity of the component and attachment system and force-resisting systems was maintained.

UUT Properties

Operating Weight (lb)*	Dimensions (in)				Lowest Natural Frequency (Hz)		
		Depth	Width	Height	Front-Back	Side-Side	Vertical
8,550	UUT3c	150	150	144	4.3	3.8	13.3

Seismic Test Parameters

Building Code	Test Criteria	Sds (g)	z/h	Ip	Aflx-H (g)	Arig-H (g)	Aflx-V (g)	Arig-V (g)
CBC 2013	2012 ICC-ES AC156	1.55	1.0	1.5	2.48	1.86	1.03	0.41

*Operating weight is for all four walls in place

Unit Mounting Description:

UUT3c was rigid base-mounted to the shake table interface frame with manufacturer-provided clips. The clips were attached to the unit's base rail with nine #14 screws at the top of the clip. The clips were attached to the shake table interface frame with three 3/8-inch diameter Grade 5 bolts per clip. Four clips were used per each side of the unit, and were evenly spaced across each side.

UUT4

UNIT UNDER TEST (UUT) Summary Sheet

DCL Dynamic Certification Laboratories

Manufacturer: Innovent

Product Line: Custom air handling units

Serial Number: 2084740.0100

Product Construction Summary:

Carbon steel base with galvanized carbon steel exterior and interior wall panels and galvanized carbon steel floor

Options / Component Summary:

Unit tested with all four walls in place. Unit contained CR coils, 2 HP VFD, 7.5 HP VFD, NEMA 3R control enclosure, NEMA 4/12/13 control enclosure, compressors and condensing fans.

Note: The UUT was operational before and after shaking and was full of operating content during the tests. The structural integrity of the component and attachment system and force-resisting systems was maintained.

UUT Properties

Operating Weight (lb)	Dimensions (in)				Lowest Natural Frequency (Hz)		
		Depth	Width	Height	Front-Back	Side-Side	Vertical
5,720	UUT4	120	120	120	3.5	3.3	10.8

Seismic Test Parameters

Building Code	Test Criteria	Sds (g)	z/h	Ip	Aflx-H (g)	Arig-H (g)	Aflx-V (g)	Arig-V (g)
CBC 2013	2012 ICC-ES AC156	2.0	1.0	1.5	3.20	2.40	1.33	0.53

Unit Mounting Description:

UUT4 was attached to its 12-inch curb with manufacturer-provided clips and nine #14 screws per the top and bottom of each clip. Four clips were used per each side of the unit, and were evenly spaced across each side. The curb was attached to the shake table interface fixture with seven 1/2-inch diameter Grade 5 bolts per each side of the unit at 15-inches on-center, maximum.

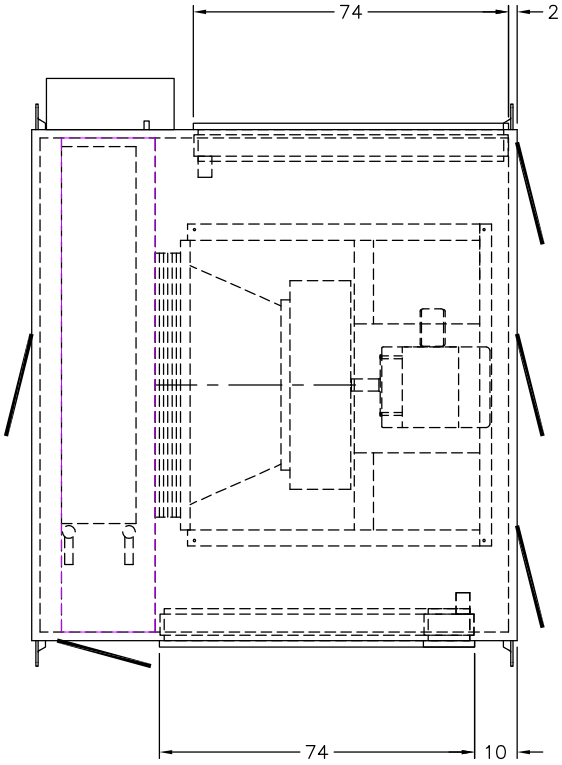

PLAN VIEW

WEIGHT:
6,600 LBS.

NOTES:

1. NO WIRES/COMPONENTS ON BACK, RIGHT, AND LEFT AS PANELS ARE REMOVABLE

2. ALL DIMENSIONS IN INCHES UNLESS OTHERWISE NOTED.

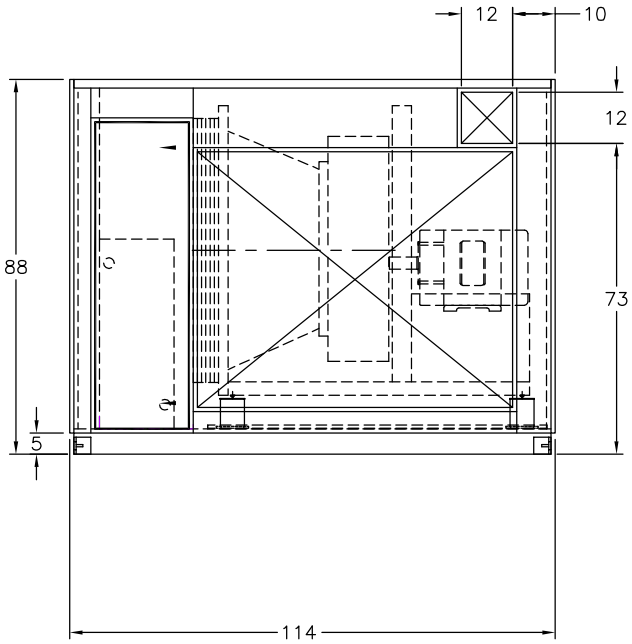

ELEVATION VIEW

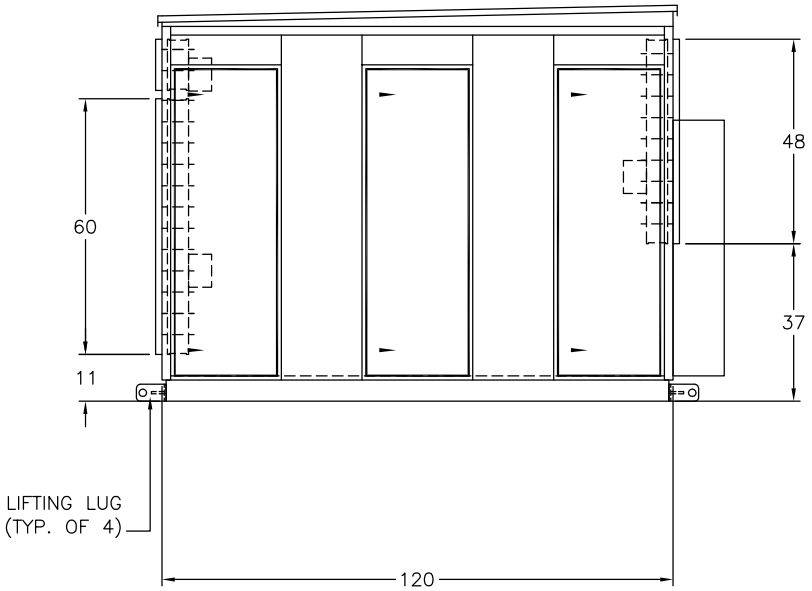

RIGHT END VIEW

Innovent Air Handling Equipment	ENGINEER: J. FREUDIGMANN	DESCRIPTION: UNIT DRAWING	
	DRAWN BY: MMS	PROJECT: OSHPD CERTIFICATION TEST UNITS	
	JOB #: 2084740	TAG #: UUT1	REV #: 3-CAS
	FILE NAME: 2084740UU01 / DATE: 7/2/14	MODEL #: N/A	

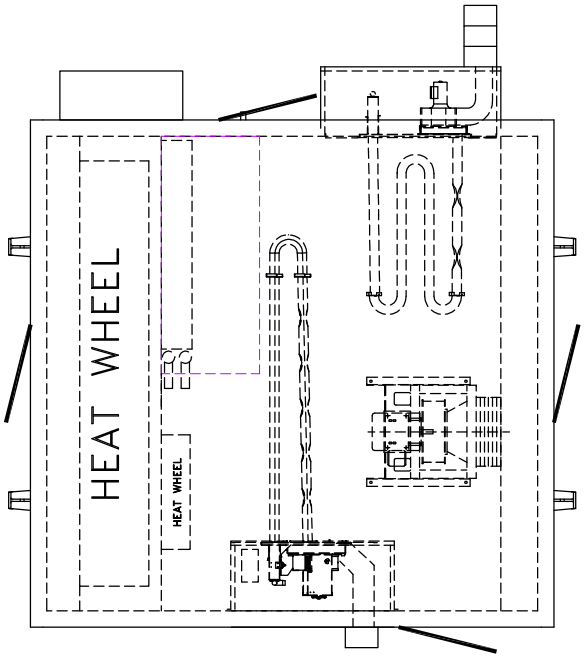

PLAN VIEW

WEIGHT:
8,500 LBS.

NOTES:

1. ALL DIMENSIONS IN INCHES UNLESS OTHERWISE NOTED.

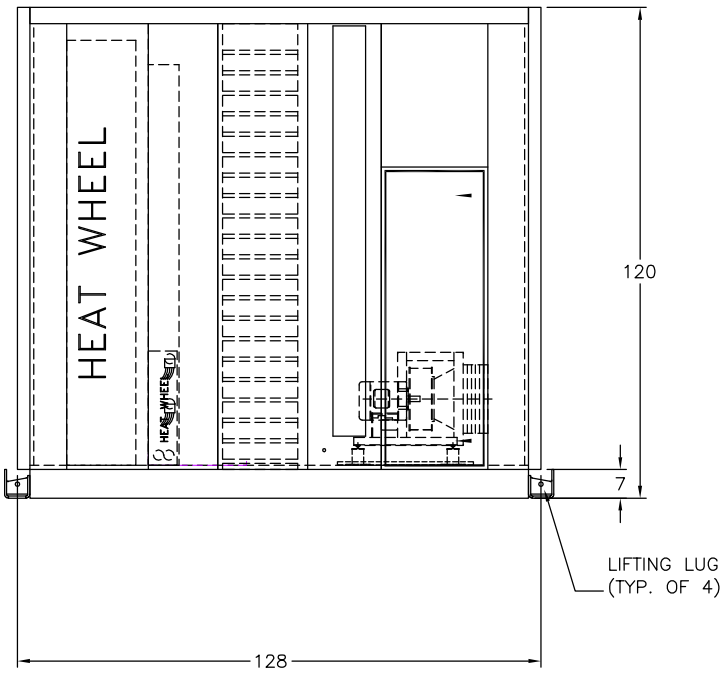

ELEVATION VIEW

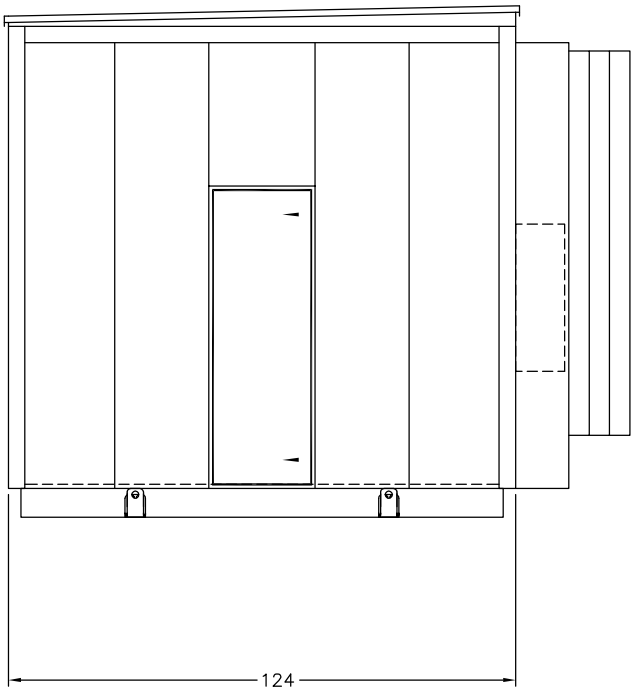

RIGHT END VIEW

Innovent Air Handling Equipment	ENGINEER: J. FREUDIGMANN	DESCRIPTION: UNIT DRAWING	
	DRAWN BY: MMS	PROJECT: OSHPD CERTIFICATION TEST UNITS	
	JOB # 2084740	TAG # UUT2	REV #: 2-CAS
	FILE NAME: 2084740UU02 / DATE: 7/2/14	MODEL # N/A	

WEIGHT:
7,800 LBS.

NOTES:

1. NO WIRES/COMPONENTS ON BACK, RIGHT, AND LEFT AS PANELS ARE REMOVABLE

2. ALL DIMENSIONS IN INCHES UNLESS OTHERWISE NOTED.

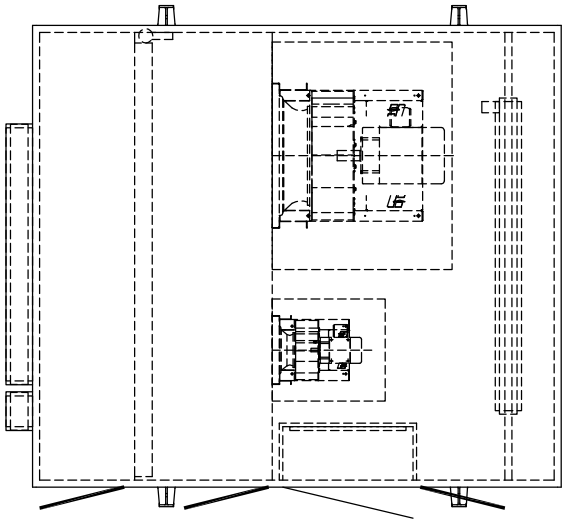

PLAN VIEW

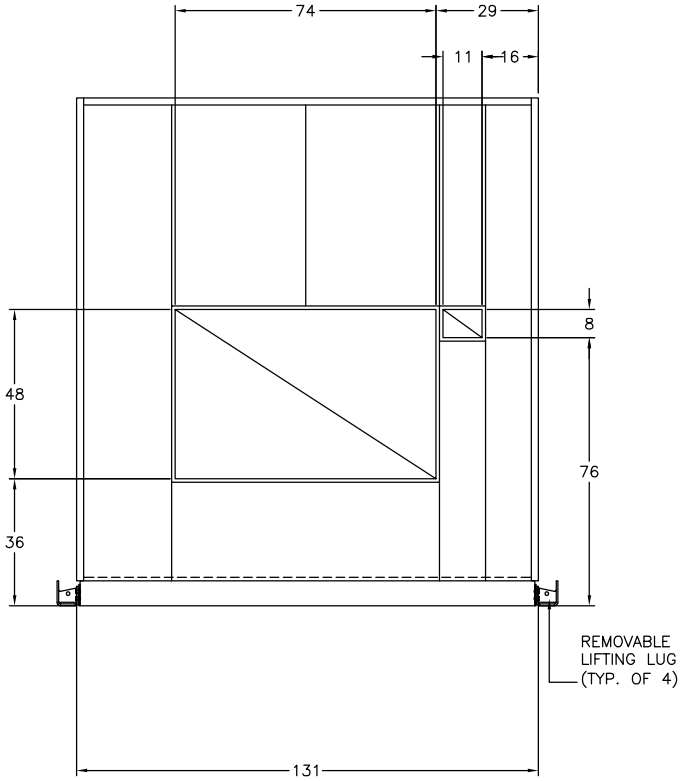

LEFT END VIEW

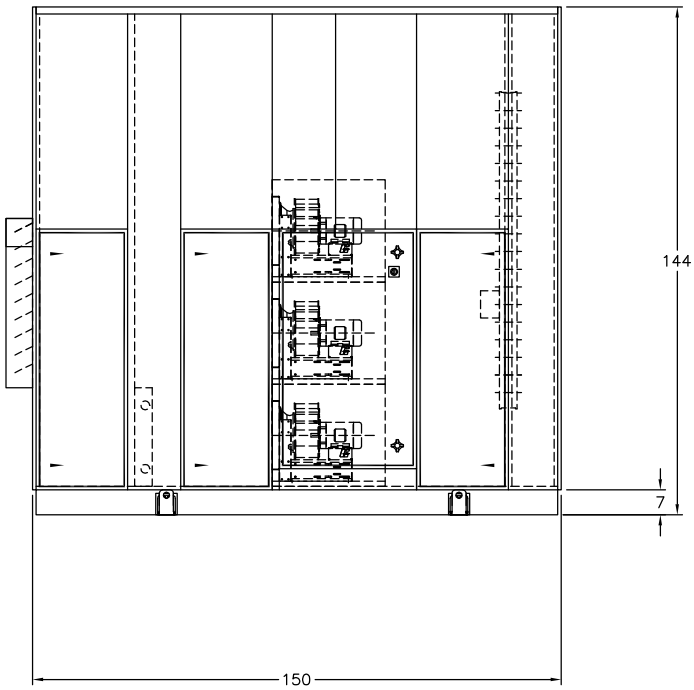

ELEVATION VIEW

Innovent Air Handling Equipment	ENGINEER: J. FREUDIGMANN	DESCRIPTION: UNIT DRAWING	
	DRAWN BY: MMS	PROJECT: OSHPD CERTIFICATION TEST UNITS	
	JOB # 2084740	TAG # UUT3	REV #: 2-CAS
	FILE NAME: 2084740UU03 / DATE: 7/1/14	MODEL # N/A	

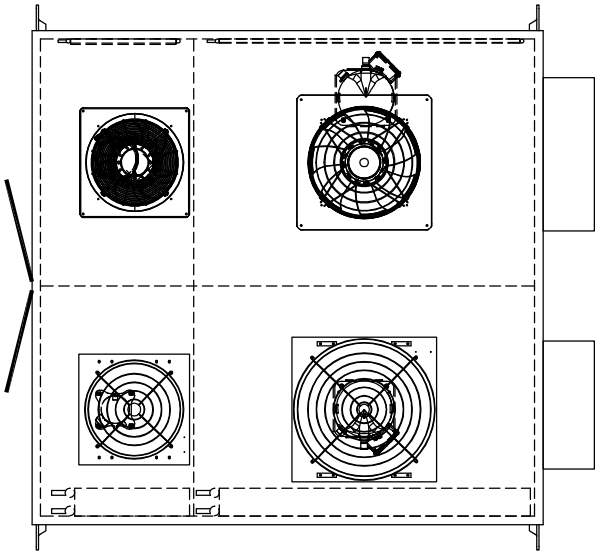

PLAN VIEW

WEIGHT:
6,800 LBS.

NOTES:

1. FLAT PAN

2. ALL DIMENSIONS IN INCHES UNLESS OTHERWISE NOTED.

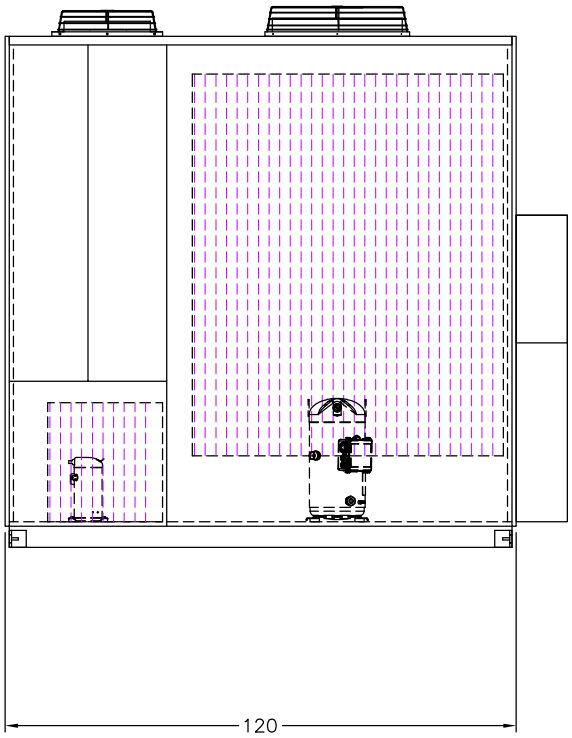

ELEVATION VIEW

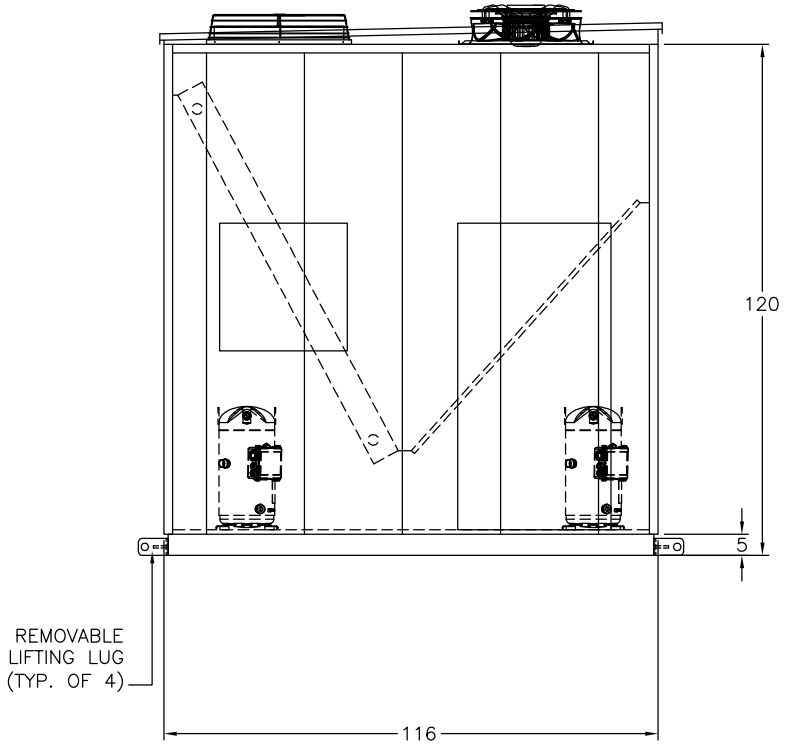

RIGHT END VIEW

Innovent Air Handling Equipment	ENGINEER: J. FREUDIGMANN	DESCRIPTION: UNIT DRAWING	
	DRAWN BY: MMS	PROJECT: OSHPD CERTIFICATION TEST UNITS	
	JOB # 2084740	TAG # UUT4	REV #: 3-CAS
	FILE NAME: 2084740UU04 / DATE: 7/2/14	MODEL # N/A	

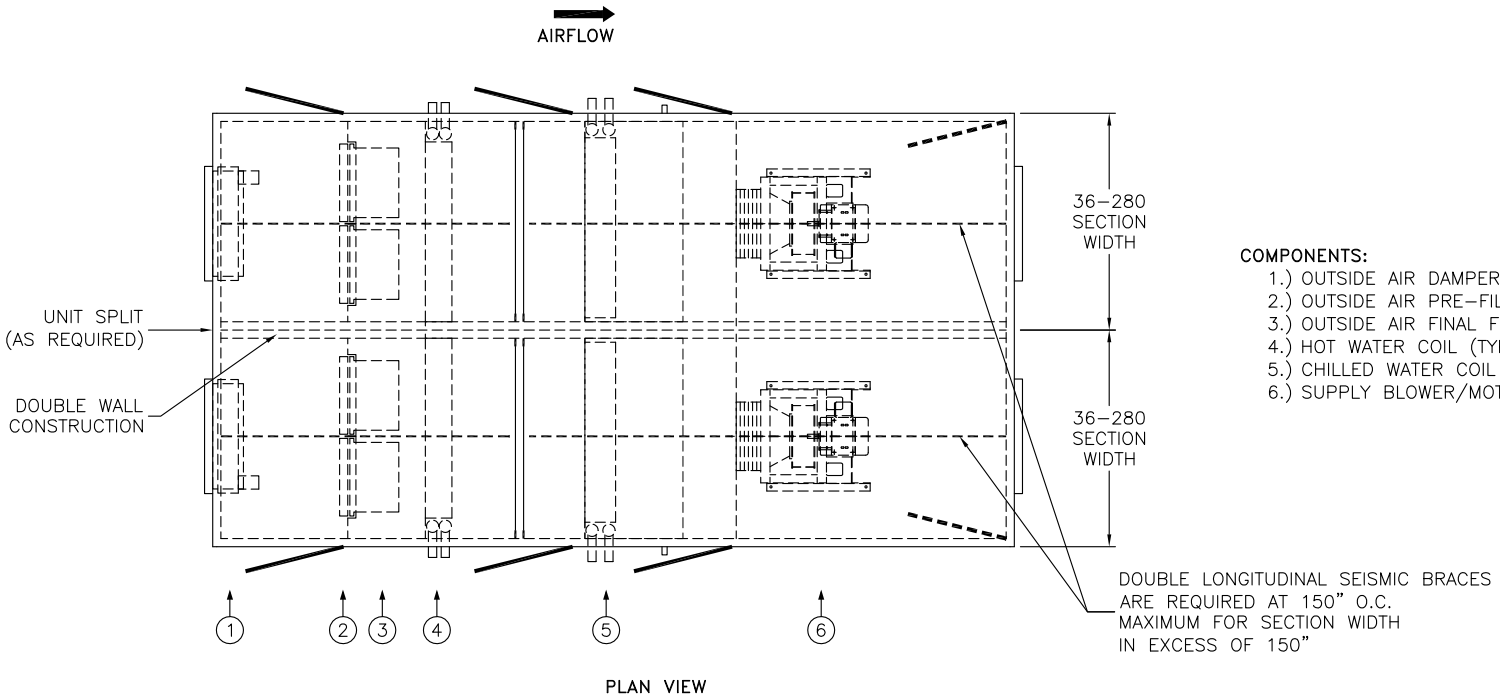

PLAN VIEW

COMPONENTS:

1.) OUTSIDE AIR DAMPER (TYP. OF 2)
2.) OUTSIDE AIR PRE–FILTER (FRONT ACCESS) (TYP. OF 2)
3.) OUTSIDE AIR FINAL FILTER (FRONT ACCESS) (TYP. OF 2)
4.) HOT WATER COIL (TYP. OF 2)
5.) CHILLED WATER COIL (TYP. OF 2)
6.) SUPPLY BLOWER/MOTOR ASSEMBLY (TYP. OF 2)

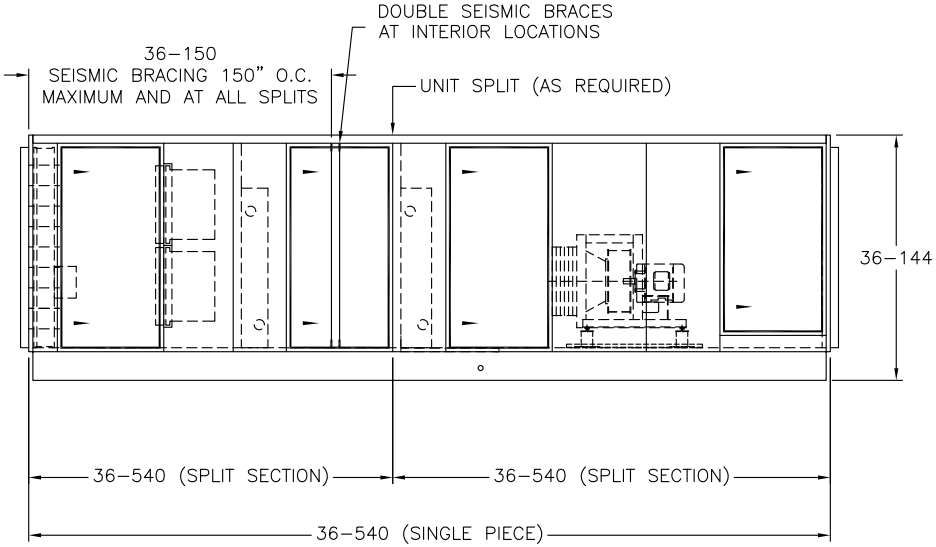

ELEVATION VIEW

NOTES:

1. ANY UNIT CONSTRUCTION DESIGN AND MATERIALS OF CONSTRUCTION AS IDENTIFIED IN THE BODY OF THE REPORT SHALL BE ACCEPTABLE. NOTE THAT AN ADDITIONAL LAYER OF PERFORATED LINER WITH SOUND ABSORBING CHARACTERISTICS MAY BE APPLIED TO THE INTERIOR OF THE UNIT.

2. ANY APPROVED COMPONENT AS IDENTIFIED IN THE BODY OF THE REPORT SHALL BE ACCEPTABLE AND CAN BE PLACED IN ANY LOCATION WITHIN THE UNIT.

3. UNIT MAY BE SPLIT IN ANY NUMBER OF SECTIONS TO ACCOMMODATE TRANSIT TO ITS FINAL LOCATION OR AS REQUIRED BY THE SPECIFIC APPLICATION.

4. SEISMIC BRACING SHALL BE INSTALLED IN ACCORDANCE WITH DRAWING OSHPD-1100: SEISMIC BRACING. DOUBLE BRACING SHALL BE INSTALLED AT EACH REQUIRED LOCATION.

5. ALL DIMENSIONS MEASURED IN INCHES UNLESS OTHERWISE NOTED.

Innovent
Air Handling Equipment

ENGINEER: G. HELLESON		DESCRIPTION: UNIT DRAWING
DRAWN BY: CAS		PROJECT: OSHPD SEISMIC CERTIFICATION
JOB #: 2084740		TAG #: N/A — REV #:
FILE NAME: 2084740DATU	DATE: 10/2/14	MODEL #: DOUBLE AIR TUNNEL UNIT WITH OR WITHOUT SPLIT

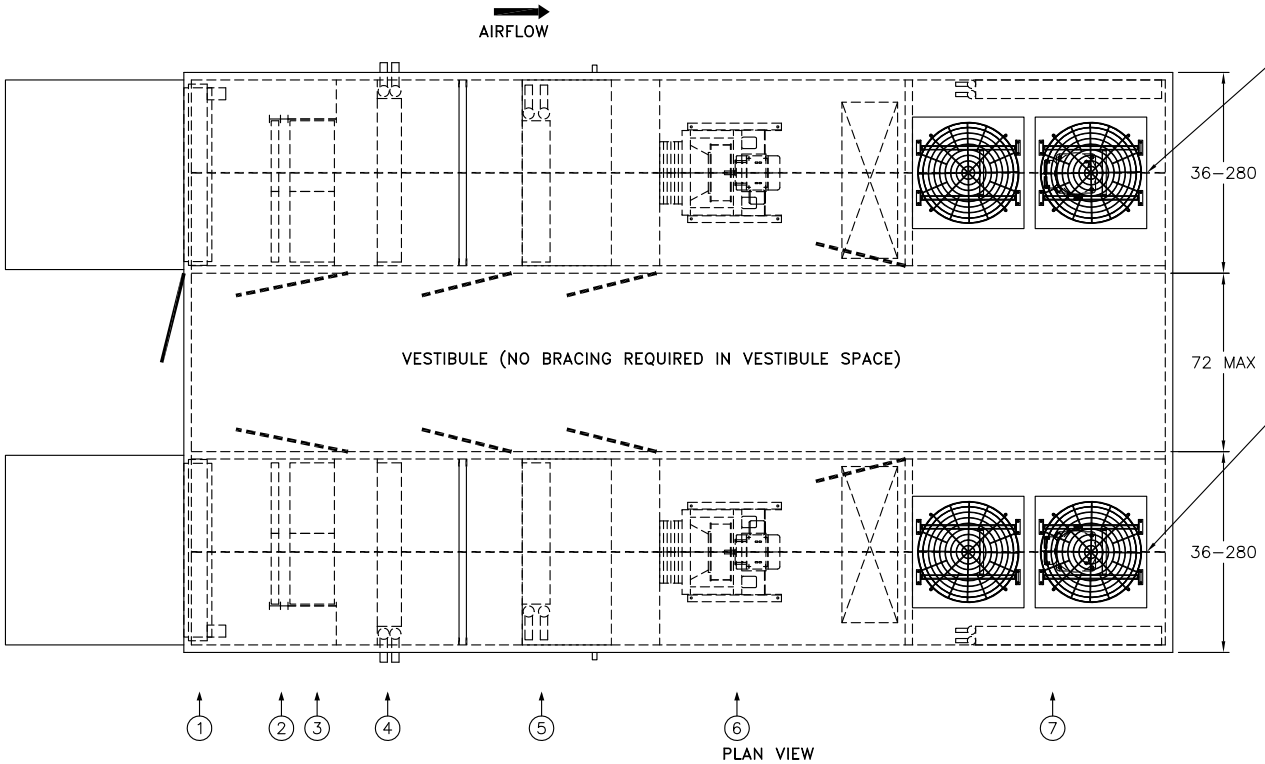

COMPONENTS:

1.) OUTSIDE AIR DAMPER (TYP. OF 2)
2.) OUTSIDE AIR PRE–FILTER (SIDE ACCESS) (TYP. OF 2)
3.) OUTSIDE AIR FINAL FILTER (SIDE ACCESS) (TYP. OF 2)
4.) HOT WATER COIL (TYP. OF 2)
5.) DX COIL (TYP. OF 2)
6.) SUPPLY BLOWER/MOTOR ASSEMBLY (TYP. OF 2)
7.) AIR COOLED CONDENSING SECTION (TYP. OF 2)

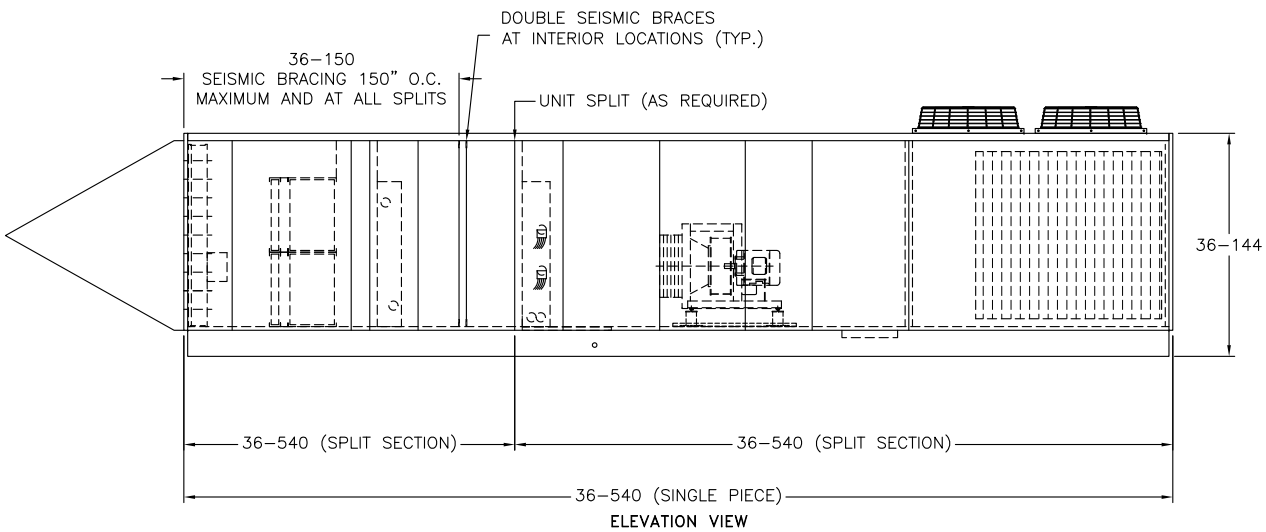

NOTES:

1. ANY UNIT CONSTRUCTION DESIGN AND MATERIALS OF CONSTRUCTION AS IDENTIFIED IN THE BODY OF THE REPORT SHALL BE ACCEPTABLE. NOTE THAT AN ADDITIONAL LAYER OF PERFORATED LINER WITH SOUND ABSORBING CHARACTERISTICS MAY BE APPLIED TO THE INTERIOR OF THE UNIT.

2. ANY APPROVED COMPONENT AS IDENTIFIED IN THE BODY OF THE REPORT SHALL BE ACCEPTABLE AND CAN BE PLACED IN ANY LOCATION WITHIN THE UNIT.

3. UNIT MAY BE SPLIT IN ANY NUMBER OF SECTIONS TO ACCOMMODATE TRANSIT TO ITS FINAL LOCATION OR AS REQUIRED BY THE SPECIFIC APPLICATION.

4. SEISMIC BRACING SHALL BE INSTALLED IN ACCORDANCE WITH DRAWING OSHPD-1100: SEISMIC BRACING. DOUBLE BRACING SHALL BE INSTALLED AT EACH REQUIRED LOCATION.

5. ALL DIMENSIONS MEASURED IN INCHES UNLESS OTHERWISE NOTED.

Innovent
Air Handling Equipment

ENGINEER: G. HELLESON		DESCRIPTION: UNIT DRAWING
DRAWN BY: CAS		PROJECT: OSHPD SEISMIC CERTIFICATION
JOB #: 2084740		TAG #: N/A — REV #:
FILE NAME: 2084740DATUV	DATE: 10/16/14	MODEL #: DOUBLE AIR TUNNEL UNIT WITH VESTIBULE

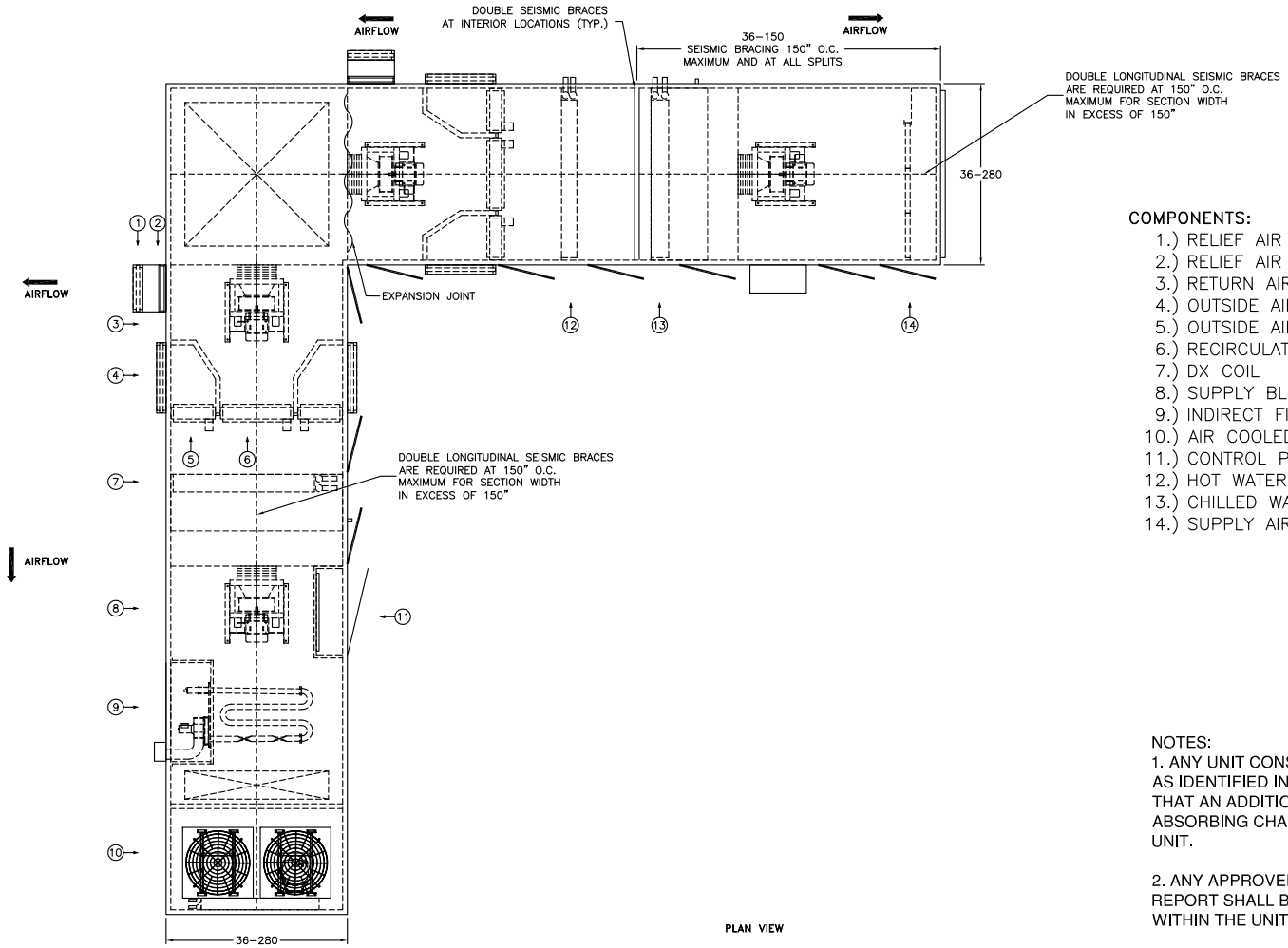

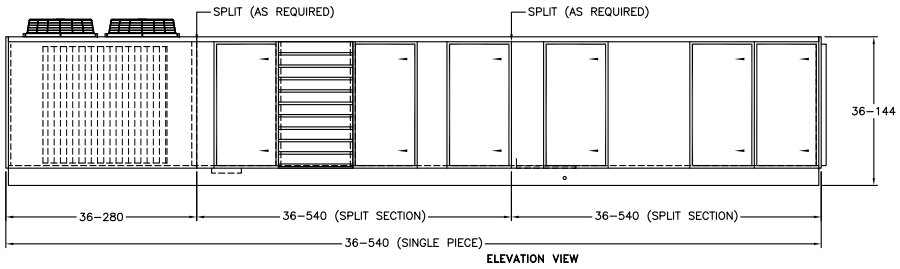

COMPONENTS:

1.) RELIEF AIR LOUVER
2.) RELIEF AIR GRAVITY DAMPER (TYP. OF 2)
3.) RETURN AIR BLOWER/MOTOR ASSEMBLY (TYP. OF 2)
4.) OUTSIDE AIR LOUVER (TYP. OF 4)
5.) OUTSIDE AIR DAMPER (TYP. OF 4)
6.) RECIRCULATION AIR DAMPER (TYP. OF 2)
7.) DX COIL
8.) SUPPLY BLOWER/MOTOR ASSEMBLY (TYP. OF 2)
9.) INDIRECT FIRED FURNACE
10.) AIR COOLED CONDENSING SECTION
11.) CONTROL PANEL (TYP. OF 2)
12.) HOT WATER COIL
13.) CHILLED WATER COIL
14.) SUPPLY AIR FILTER

NOTES:

1. ANY UNIT CONSTRUCTION DESIGN AND MATERIALS OF CONSTRUCTION AS IDENTIFIED IN THE BODY OF THE REPORT SHALL BE ACCEPTABLE. NOTE THAT AN ADDITIONAL LAYER OF PERFORATED LINER WITH SOUND ABSORBING CHARACTERISTICS MAY BE APPLIED TO THE INTERIOR OF THE UNIT.

2. ANY APPROVED COMPONENT AS IDENTIFIED IN THE BODY OF THE REPORT SHALL BE ACCEPTABLE AND CAN BE PLACED IN ANY LOCATION WITHIN THE UNIT.

3. UNIT MAY BE SPLIT IN ANY NUMBER OF SECTIONS TO ACCOMMODATE TRANSIT TO ITS FINAL LOCATION OR AS REQUIRED BY THE SPECIFIC APPLICATION.

4. SEISMIC BRACING SHALL BE INSTALLED IN ACCORDANCE WITH DRAWING OSHPD-1100: SEISMIC BRACING. DOUBLE BRACING SHALL BE INSTALLED AT EACH REQUIRED LOCATION.

5. ALL DIMENSIONS MEASURED IN INCHES UNLESS OTHERWISE NOTED.

Innovent
Air Handling Equipment

ENGINEER: G. HELLESON		DESCRIPTION: UNIT DRAWING
DRAWN BY: CAS		PROJECT: OSHPD SEISMIC CERTIFICATION
JOB #: 2084740		TAG #: N/A — REV #:
FILE NAME: 2084740LATU	DATE: 10/16/14	MODEL #: L–SHAPED UNIT

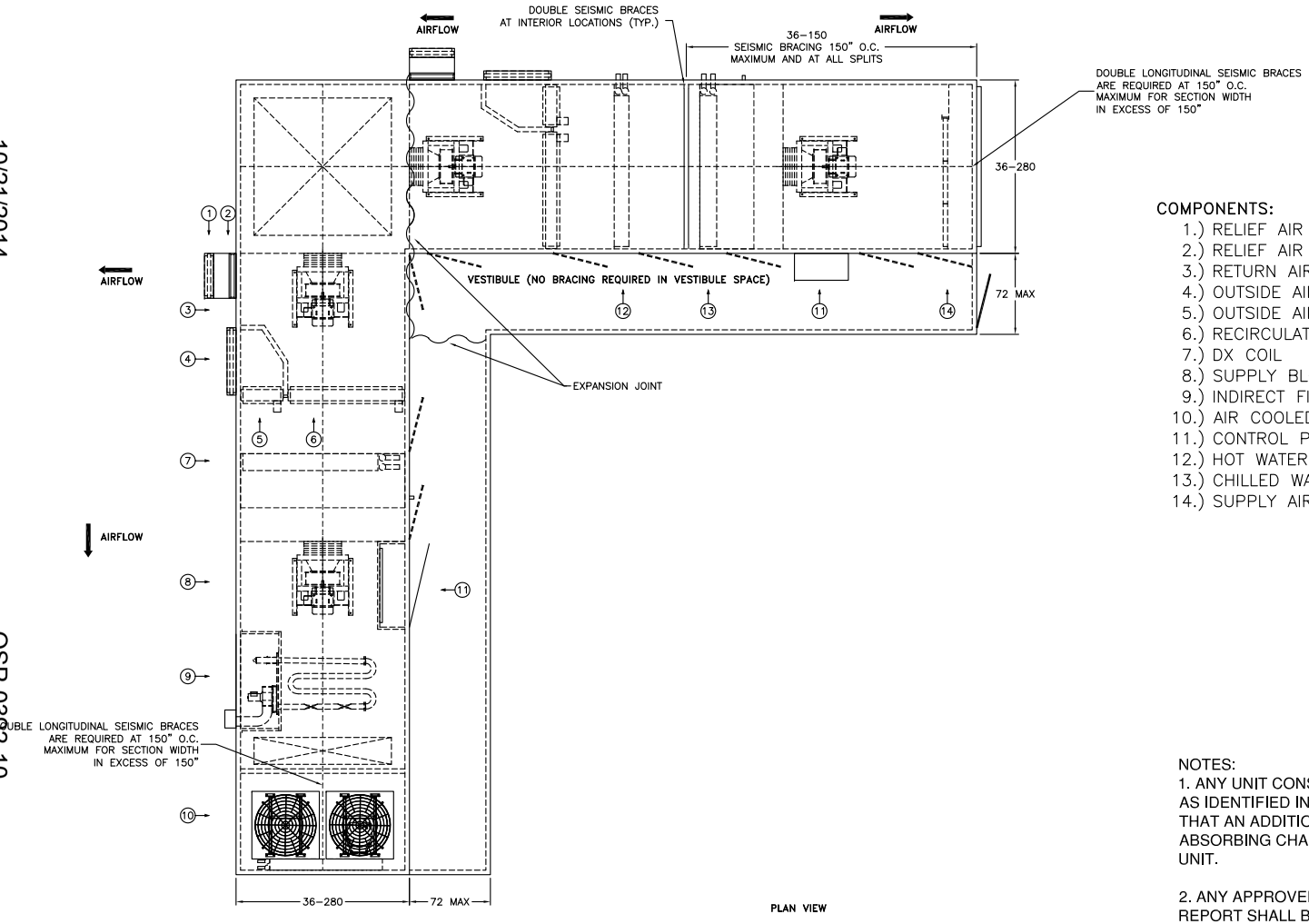

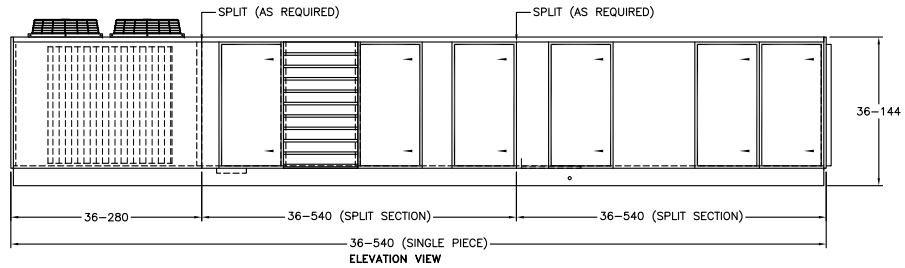

COMPONENTS:

1.) RELIEF AIR LOUVER
2.) RELIEF AIR GRAVITY DAMPER (TYP. OF 2)
3.) RETURN AIR BLOWER/MOTOR ASSEMBLY (TYP. OF 2)
4.) OUTSIDE AIR LOUVER (TYP. OF 2)
5.) OUTSIDE AIR DAMPER (TYP. OF 2)
6.) RECIRCULATION AIR DAMPER (TYP. OF 2)
7.) DX COIL
8.) SUPPLY BLOWER/MOTOR ASSEMBLY (TYP. OF 2)
9.) INDIRECT FIRED FURNACE
10.) AIR COOLED CONDENSING SECTION
11.) CONTROL PANEL (TYP. OF 2)
12.) HOT WATER COIL
13.) CHILLED WATER COIL
14.) SUPPLY AIR FILTER

NOTES:

1. ANY UNIT CONSTRUCTION DESIGN AND MATERIALS OF CONSTRUCTION AS IDENTIFIED IN THE BODY OF THE REPORT SHALL BE ACCEPTABLE. NOTE THAT AN ADDITIONAL LAYER OF PERFORATED LINER WITH SOUND ABSORBING CHARACTERISTICS MAY BE APPLIED TO THE INTERIOR OF THE UNIT.

2. ANY APPROVED COMPONENT AS IDENTIFIED IN THE BODY OF THE REPORT SHALL BE ACCEPTABLE AND CAN BE PLACED IN ANY LOCATION WITHIN THE UNIT.

3. UNIT MAY BE SPLIT IN ANY NUMBER OF SECTIONS TO ACCOMMODATE TRANSIT TO ITS FINAL LOCATION OR AS REQUIRED BY THE SPECIFIC APPLICATION.

4. SEISMIC BRACING SHALL BE INSTALLED IN ACCORDANCE WITH DRAWING OSHPD-1100: SEISMIC BRACING. DOUBLE BRACING SHALL BE INSTALLED AT EACH REQUIRED LOCATION.

5. ALL DIMENSIONS MEASURED IN INCHES UNLESS OTHERWISE NOTED.

Innovent
Air Handling Equipment

ENGINEER: G. HELLESON		DESCRIPTION: UNIT DRAWING
DRAWN BY: CAS		PROJECT: OSHPD SEISMIC CERTIFICATION
JOB #: 2084740		TAG #: N/A — REV #:
FILE NAME: 2084740LATUV	DATE: 10/16/14	MODEL #: L–SHAPED UNIT WITH VESTIBULE

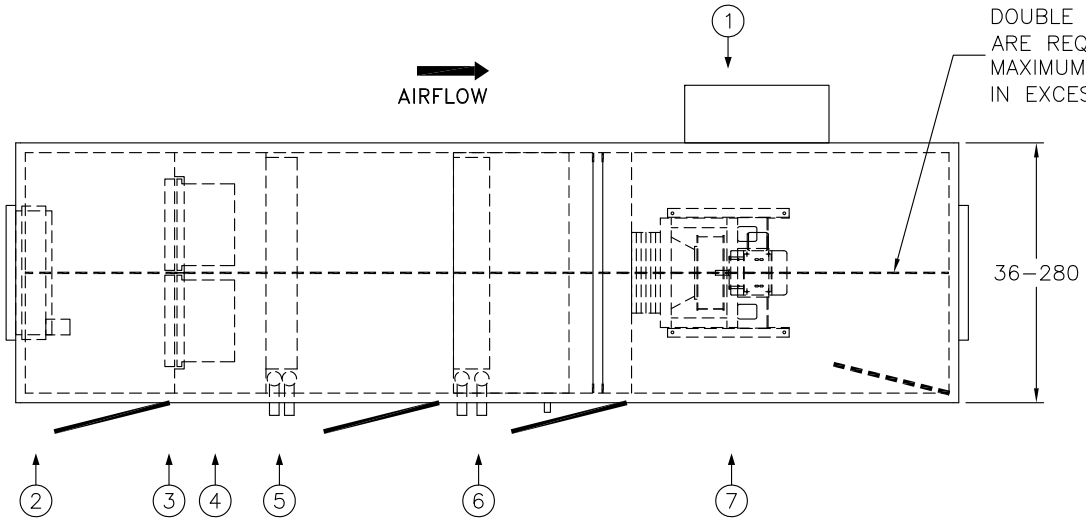

PLAN VIEW

COMPONENTS:

1.) CONTROL PANEL
2.) OUTSIDE AIR DAMPER
3.) OUTSIDE AIR PRE–FILTER (FRONT ACCESS)
4.) OUTSIDE AIR FINAL FILTER (FRONT ACCESS)
5.) HOT WATER COIL
6.) CHILLED WATER COIL
7.) SUPPLY BLOWER/MOTOR ASSEMBLY

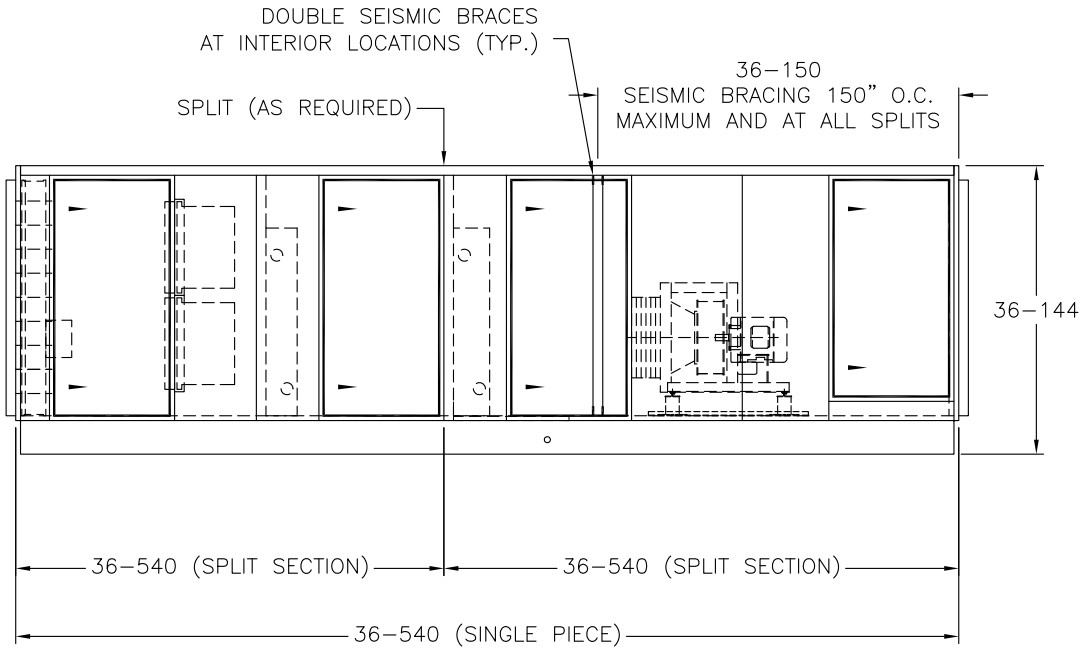

ELEVATION VIEW

NOTES:

1. ANY UNIT CONSTRUCTION DESIGN AND MATERIALS OF CONSTRUCTION AS IDENTIFIED IN THE BODY OF THE REPORT SHALL BE ACCEPTABLE. NOTE THAT AN ADDITIONAL LAYER OF PERFORATED LINER WITH SOUND ABSORBING CHARACTERISTICS MAY BE APPLIED TO THE INTERIOR OF THE UNIT.

2. ANY APPROVED COMPONENT AS IDENTIFIED IN THE BODY OF THE REPORT SHALL BE ACCEPTABLE AND CAN BE PLACED IN ANY LOCATION WITHIN THE UNIT.

3. UNIT MAY BE SPLIT IN ANY NUMBER OF SECTIONS TO ACCOMMODATE TRANSIT TO ITS FINAL LOCATION OR AS REQUIRED BY THE SPECIFIC APPLICATION.

4. SEISMIC BRACING SHALL BE INSTALLED IN ACCORDANCE WITH DRAWING OSHPD-1100: SEISMIC BRACING. DOUBLE BRACING SHALL BE INSTALLED AT EACH REQUIRED LOCATION.

5. ALL DIMENSIONS MEASURED IN INCHES UNLESS OTHERWISE NOTED.

Innovent Air Handling Equipment	ENGINEER: G. HELLESON	DESCRIPTION: UNIT DRAWING	
	DRAWN BY: CAS	PROJECT: OSHPD SEISMIC CERTIFICATION	
	JOB #: 2084740	TAG #: N/A	REV #:
	FILE NAME: 2084740SATU / DATE: 10/16/14	MODEL #: SINGLE AIR TUNNEL UNIT WITH OR WITHOUT SPLIT	

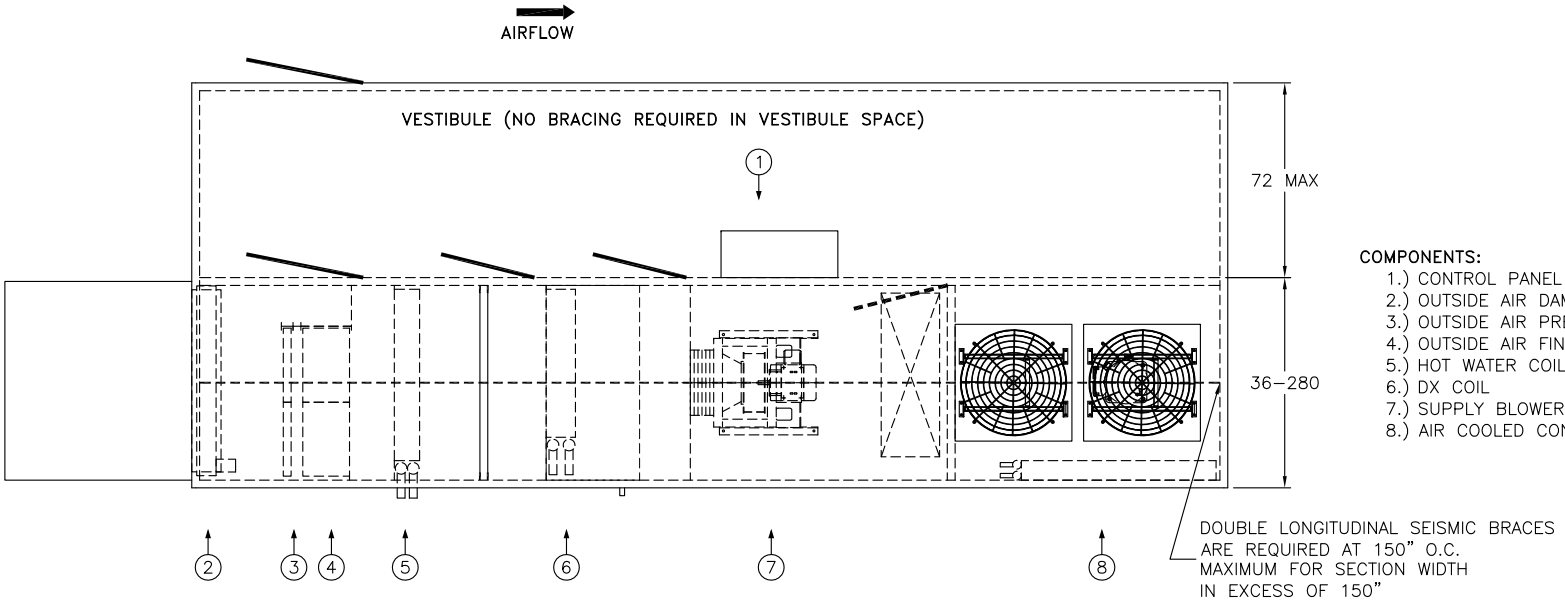

PLAN VIEW

COMPONENTS:

1.) CONTROL PANEL
2.) OUTSIDE AIR DAMPER
3.) OUTSIDE AIR PRE–FILTER (SIDE ACCESS)
4.) OUTSIDE AIR FINAL FILTER (SIDE ACCESS)
5.) HOT WATER COIL
6.) DX COIL
7.) SUPPLY BLOWER/MOTOR ASSEMBLY
8.) AIR COOLED CONDENSING SECTION

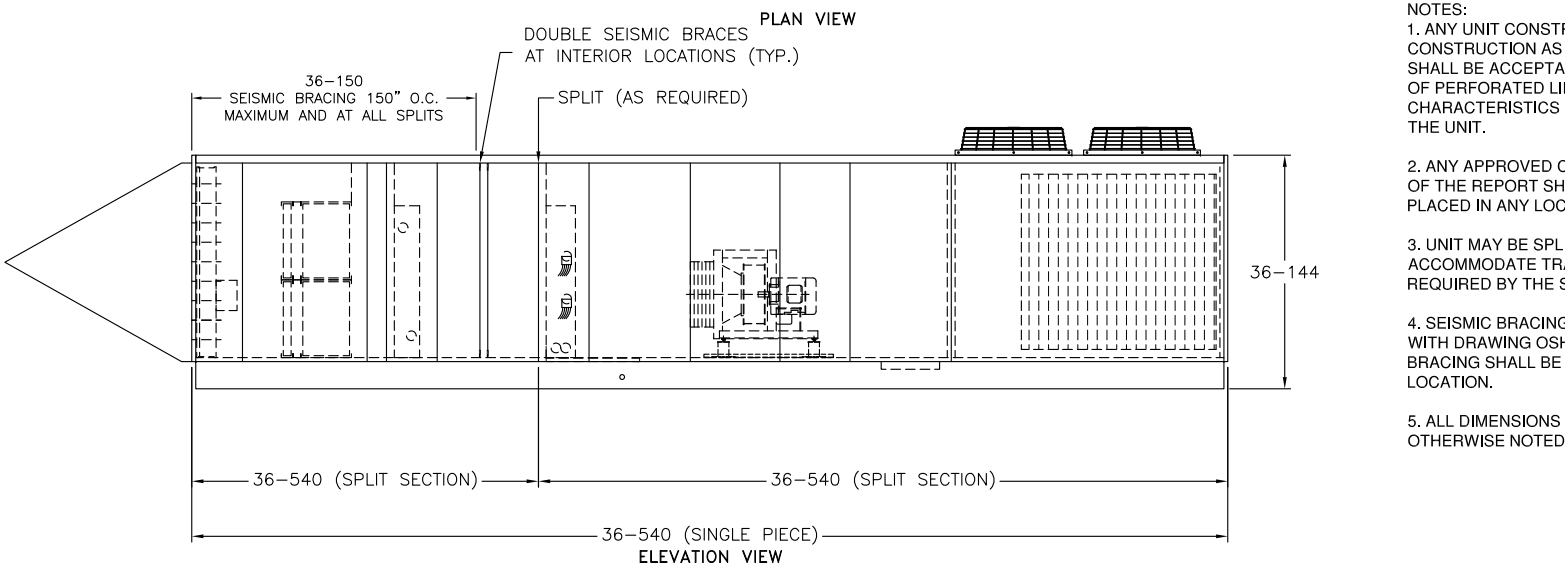

ELEVATION VIEW

NOTES:

1. ANY UNIT CONSTRUCTION DESIGN AND MATERIALS OF CONSTRUCTION AS IDENTIFIED IN THE BODY OF THE REPORT SHALL BE ACCEPTABLE. NOTE THAT AN ADDITIONAL LAYER OF PERFORATED LINER WITH SOUND ABSORBING CHARACTERISTICS MAY BE APPLIED TO THE INTERIOR OF THE UNIT.

2. ANY APPROVED COMPONENT AS IDENTIFIED IN THE BODY OF THE REPORT SHALL BE ACCEPTABLE AND CAN BE PLACED IN ANY LOCATION WITHIN THE UNIT.

3. UNIT MAY BE SPLIT IN ANY NUMBER OF SECTIONS TO ACCOMMODATE TRANSIT TO ITS FINAL LOCATION OR AS REQUIRED BY THE SPECIFIC APPLICATION.

4. SEISMIC BRACING SHALL BE INSTALLED IN ACCORDANCE WITH DRAWING OSHPD-1100: SEISMIC BRACING. DOUBLE BRACING SHALL BE INSTALLED AT EACH REQUIRED LOCATION.

5. ALL DIMENSIONS MEASURED IN INCHES UNLESS OTHERWISE NOTED.

Innovent Air Handling Equipment	ENGINEER: G. HELLESON	DESCRIPTION: UNIT DRAWING	
	DRAWN BY: CAS	PROJECT: OSHPD SEISMIC CERTIFICATION	
	JOB #: 2084740	TAG #: N/A	REV #:
	FILE NAME: 2084740SATUV / DATE: 10/16/14	MODEL #: SINGLE AIR TUNNEL UNIT WITH VESTIBULE	

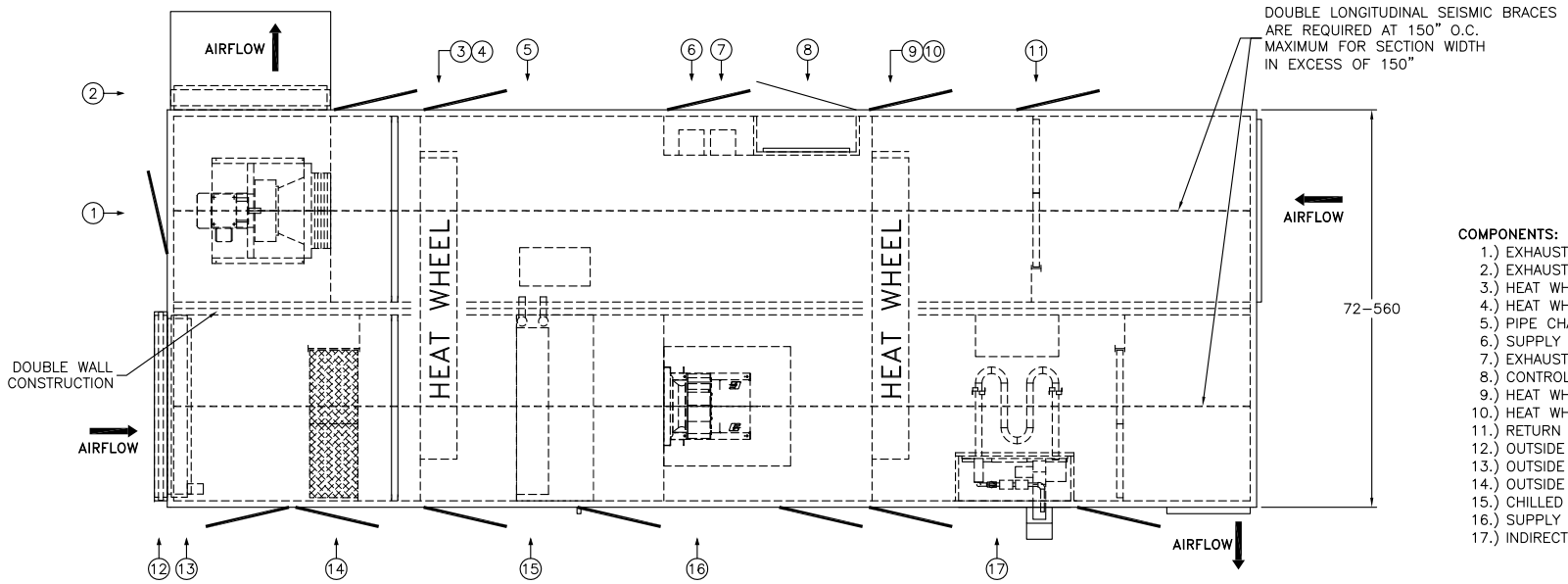

PLAN VIEW

COMPONENTS:

1.) EXHAUST BLOWER/MOTOR ASSEMBLY
2.) EXHAUST AIR GRAVITY DAMPER
3.) HEAT WHEEL
4.) HEAT WHEEL MOTOR ACCESS
5.) PIPE CHASE
6.) SUPPLY FAN VFD
7.) EXHAUST FAN VFD
8.) CONTROL PANEL/MAIN DICONNECT
9.) HEAT WHEEL
10.) HEAT WHEEL MOTOR ACCESS
11.) RETURN AIR FILTER
12.) OUTSIDE AIR LOUVER
13.) OUTSIDE AIR DAMPER
14.) OUTSIDE AIR FILTER
15.) CHILLED WATER COIL
16.) SUPPLY BLOWER/MOTOR ASSEMBLY
17.) INDIRECT FIRED FURNACE

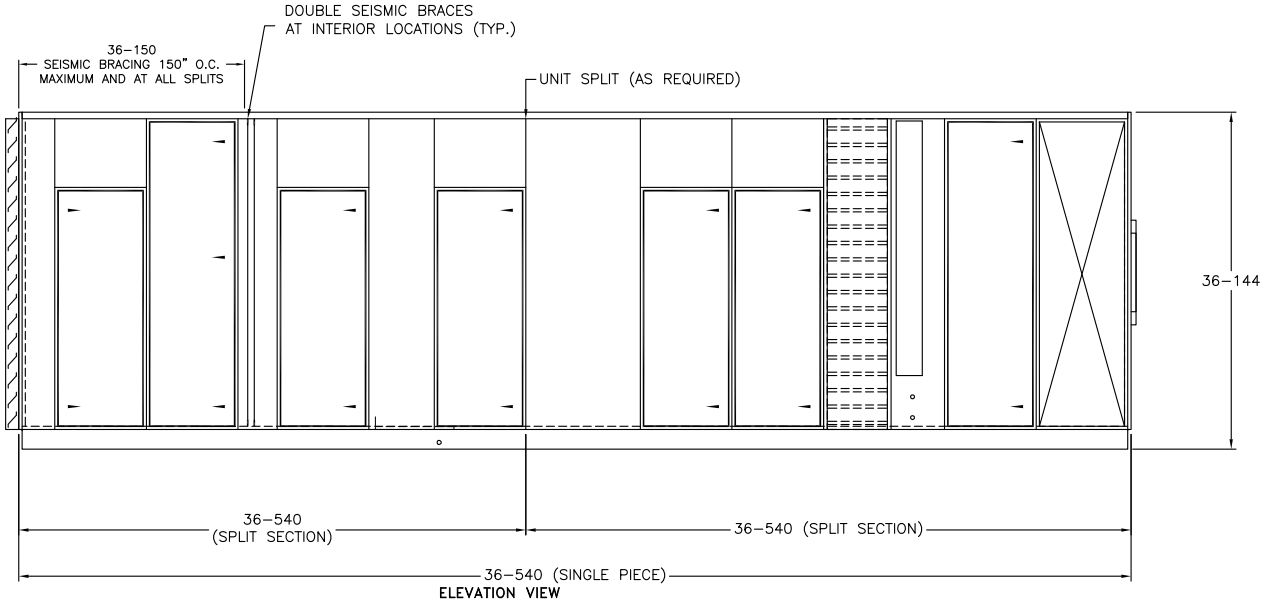

ELEVATION VIEW

NOTES:

1. ANY UNIT CONSTRUCTION DESIGN AND MATERIALS OF CONSTRUCTION AS IDENTIFIED IN THE BODY OF THE REPORT SHALL BE ACCEPTABLE. NOTE THAT AN ADDITIONAL LAYER OF PERFORATED LINER WITH SOUND ABSORBING CHARACTERISTICS MAY BE APPLIED TO THE INTERIOR OF THE UNIT.

2. ANY APPROVED COMPONENT AS IDENTIFIED IN THE BODY OF THE REPORT SHALL BE ACCEPTABLE AND CAN BE PLACED IN ANY LOCATION WITHIN THE UNIT.

3. UNIT MAY BE SPLIT IN ANY NUMBER OF SECTIONS TO ACCOMMODATE TRANSIT TO ITS FINAL LOCATION OR AS REQUIRED BY THE SPECIFIC APPLICATION.

4. SEISMIC BRACING SHALL BE INSTALLED IN ACCORDANCE WITH DRAWING OSHPD-1100: SEISMIC BRACING. DOUBLE BRACING SHALL BE INSTALLED AT EACH REQUIRED LOCATION.

5. ALL DIMENSIONS MEASURED IN INCHES UNLESS OTHERWISE NOTED.

Innovent Air Handling Equipment	ENGINEER: G. HELLESON		DESCRIPTION: UNIT DRAWING
	DRAWN BY: CAS		PROJECT: OSHPD SEISMIC CERTIFICATION
	JOB #: 2084740		TAG #: N/A — REV #:
	FILE NAME: 2084740SSATU	DATE: 10/16/14	MODEL #: DUAL AIR TUNNEL UNIT WITH OR WITHOUT SPLIT

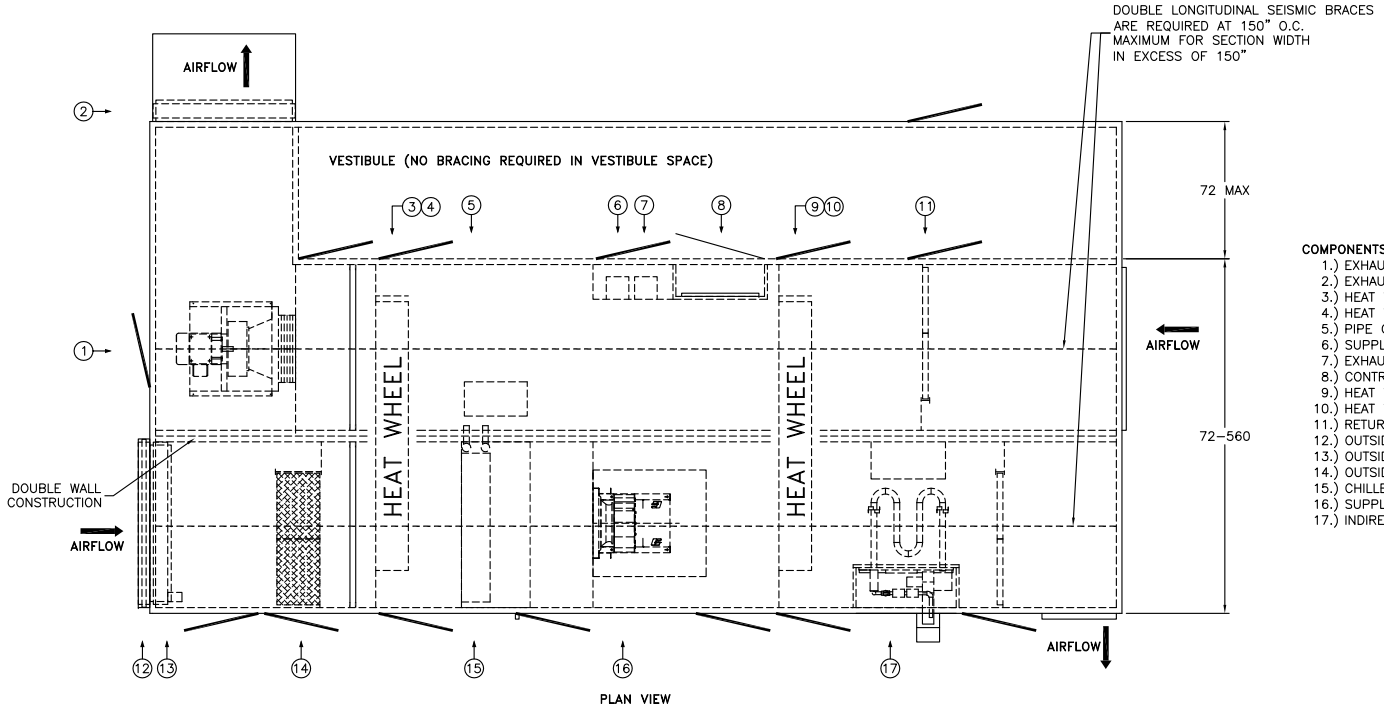

COMPONENTS:
1.) EXHAUST BLOWER/MOTOR ASSEMBLY
2.) EXHAUST AIR GRAVITY DAMPER
3.) HEAT WHEEL
4.) HEAT WHEEL MOTOR ACCESS
5.) PIPE CHASE
6.) SUPPLY FAN VFD
7.) EXHAUST FAN VFD
8.) CONTROL PANEL/MAIN DICONNECT
9.) HEAT WHEEL
10.) HEAT WHEEL MOTOR ACCESS
11.) RETURN AIR FILTER
12.) OUTSIDE AIR LOUVER
13.) OUTSIDE AIR DAMPER
14.) OUTSIDE AIR FILTER
15.) CHILLED WATER COIL
16.) SUPPLY BLOWER/MOTOR ASSEMBLY
17.) INDIRECT FIRED FURNACE

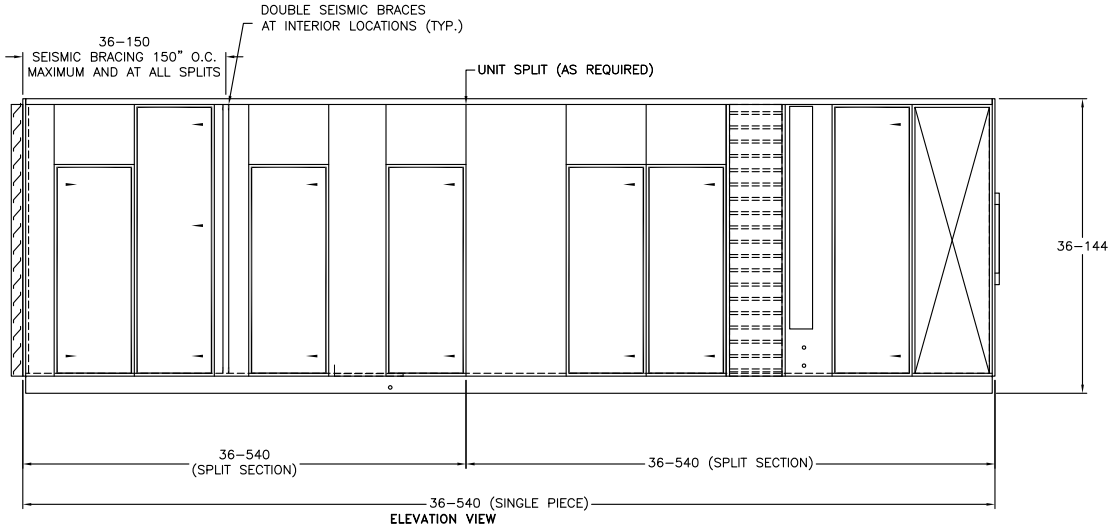

NOTES:
1. ANY UNIT CONSTRUCTION DESIGN AND MATERIALS OF CONSTRUCTION AS IDENTIFIED IN THE BODY OF THE REPORT SHALL BE ACCEPTABLE. NOTE THAT AN ADDITIONAL LAYER OF PERFORATED LINER WITH SOUND ABSORBING CHARACTERISTICS MAY BE APPLIED TO THE INTERIOR OF THE UNIT.

2. ANY APPROVED COMPONENT AS IDENTIFIED IN THE BODY OF THE REPORT SHALL BE ACCEPTABLE AND CAN BE PLACED IN ANY LOCATION WITHIN THE UNIT.

3. UNIT MAY BE SPLIT IN ANY NUMBER OF SECTIONS TO ACCOMMODATE TRANSIT TO ITS FINAL LOCATION OR AS REQUIRED BY THE SPECIFIC APPLICATION.

4. SEISMIC BRACING SHALL BE INSTALLED IN ACCORDANCE WITH DRAWING OSHPD-1100: SEISMIC BRACING. DOUBLE BRACING SHALL BE INSTALLED AT EACH REQUIRED LOCATION.

5. ALL DIMENSIONS MEASURED IN INCHES UNLESS OTHERWISE NOTED.

Innovent
Air Handling Equipment

ENGINEER: G. HELLESON		DESCRIPTION: UNIT DRAWING
DRAWN BY: CAS		PROJECT: OSHPD SEISMIC CERTIFICATION
JOB #: 2084740		TAG #: N/A — REV #:
FILE NAME: 2084740SSATUV	DATE: 10/16/14	MODEL #: DUAL AIR TUNNEL UNIT WITH VESTIBULE

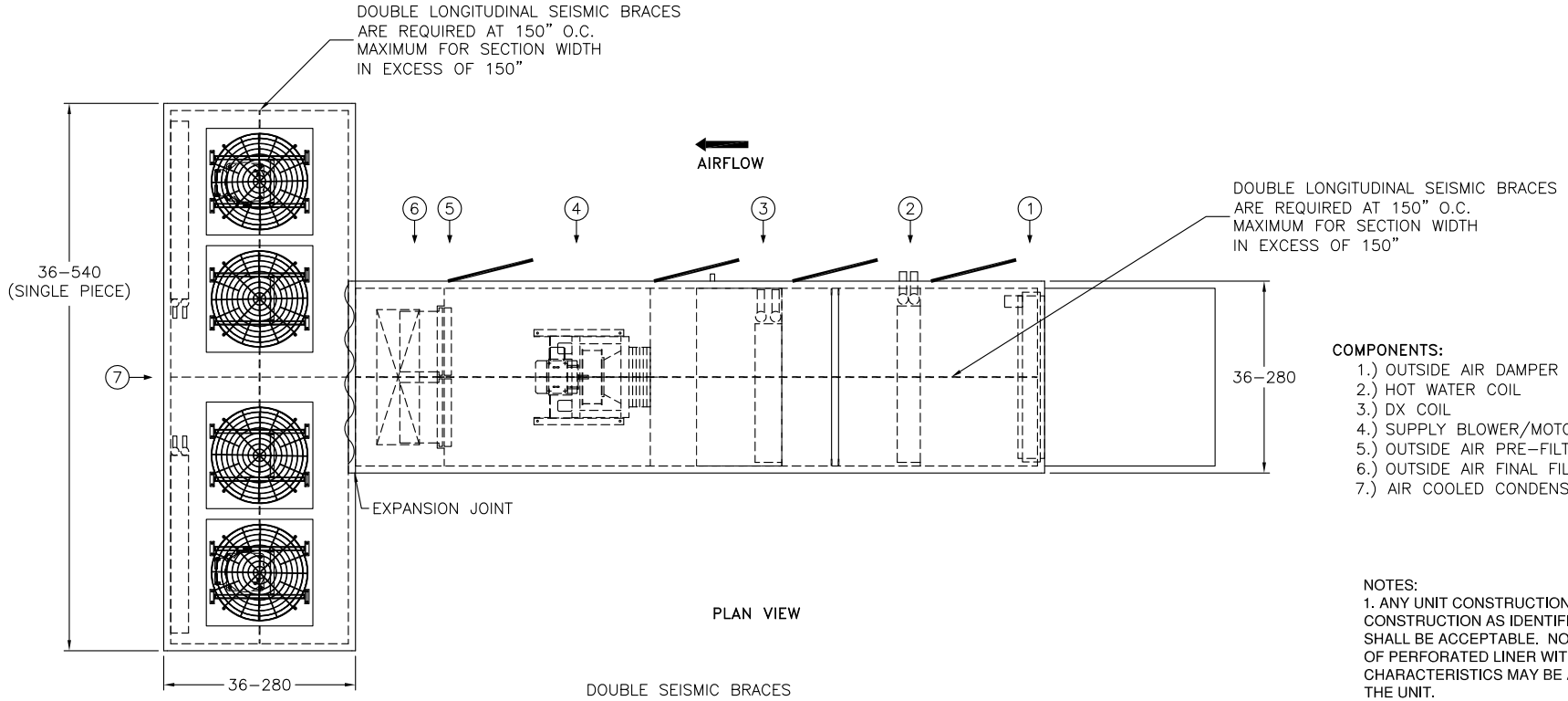

PLAN VIEW

COMPONENTS:

1.) OUTSIDE AIR DAMPER
2.) HOT WATER COIL
3.) DX COIL
4.) SUPPLY BLOWER/MOTOR ASSEMBLY
5.) OUTSIDE AIR PRE-FILTER (FRONT ACCESS)
6.) OUTSIDE AIR FINAL FILTER (FRONT ACCESS)
7.) AIR COOLED CONDENSING SECTION

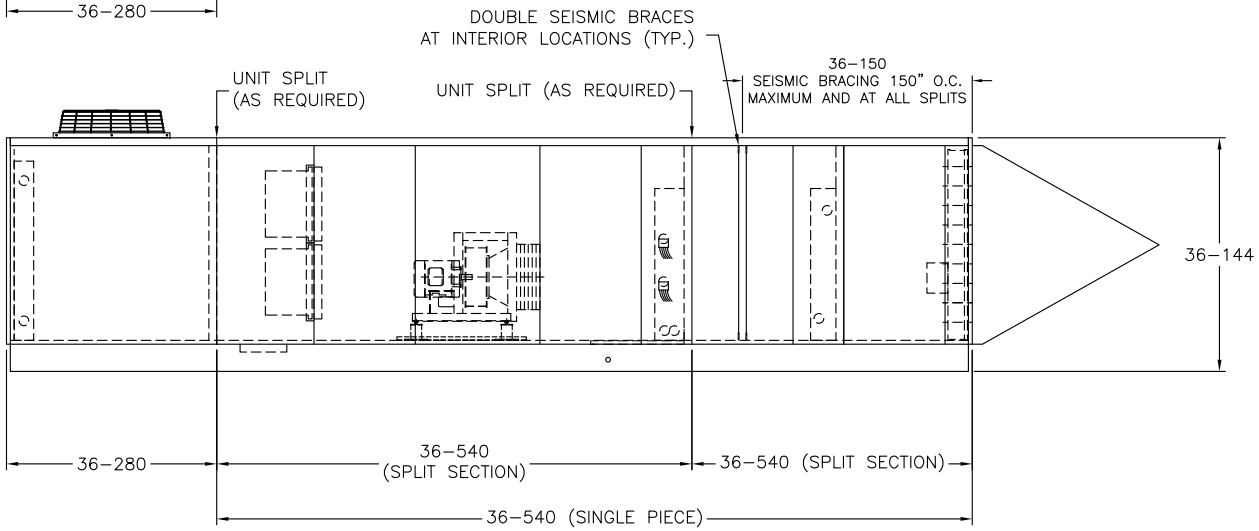

ELEVATION VIEW

NOTES:

1. ANY UNIT CONSTRUCTION DESIGN AND MATERIALS OF CONSTRUCTION AS IDENTIFIED IN THE BODY OF THE REPORT SHALL BE ACCEPTABLE. NOTE THAT AN ADDITIONAL LAYER OF PERFORATED LINER WITH SOUND ABSORBING CHARACTERISTICS MAY BE APPLIED TO THE INTERIOR OF THE UNIT.

2. ANY APPROVED COMPONENT AS IDENTIFIED IN THE BODY OF THE REPORT SHALL BE ACCEPTABLE AND CAN BE PLACED IN ANY LOCATION WITHIN THE UNIT.

3. UNIT MAY BE SPLIT IN ANY NUMBER OF SECTIONS TO ACCOMMODATE TRANSIT TO ITS FINAL LOCATION OR AS REQUIRED BY THE SPECIFIC APPLICATION.

4. SEISMIC BRACING SHALL BE INSTALLED IN ACCORDANCE WITH DRAWING OSHPD-1100: SEISMIC BRACING. DOUBLE BRACING SHALL BE INSTALLED AT EACH REQUIRED LOCATION.

5. ALL DIMENSIONS MEASURED IN INCHES UNLESS OTHERWISE NOTED.

Innovent
Air Handling Equipment

ENGINEER: G. HELLESON		DESCRIPTION: UNIT DRAWING
DRAWN BY: CAS		PROJECT: OSHPD SEISMIC CERTIFICATION
JOB #: 2084740		TAG #: N/A — REV #:
FILE NAME: 2084740TATU	DATE: 10/16/14	MODEL #: T-SHAPED UNIT

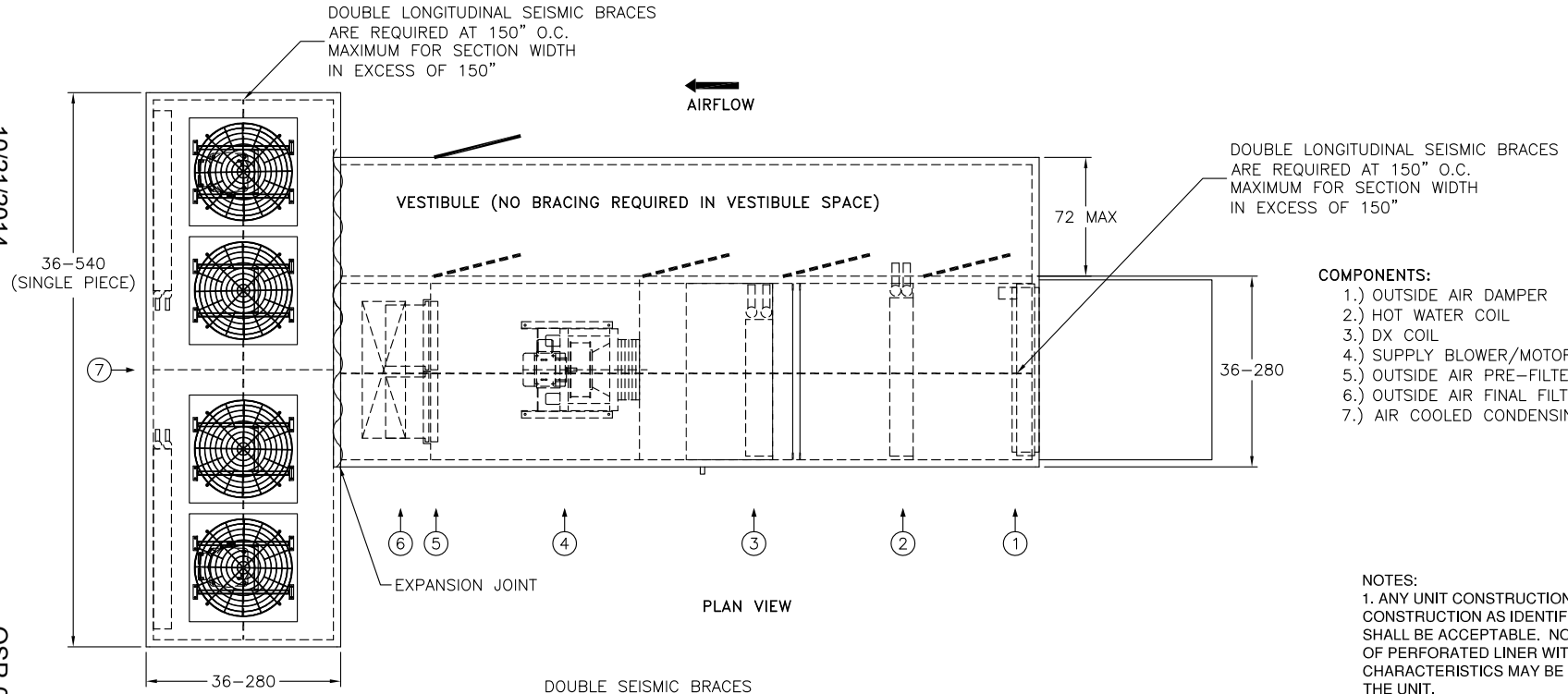

COMPONENTS:

1.) OUTSIDE AIR DAMPER
2.) HOT WATER COIL
3.) DX COIL
4.) SUPPLY BLOWER/MOTOR ASSEMBLY
5.) OUTSIDE AIR PRE-FILTER (FRONT ACCESS)
6.) OUTSIDE AIR FINAL FILTER (FRONT ACCESS)
7.) AIR COOLED CONDENSING SECTION

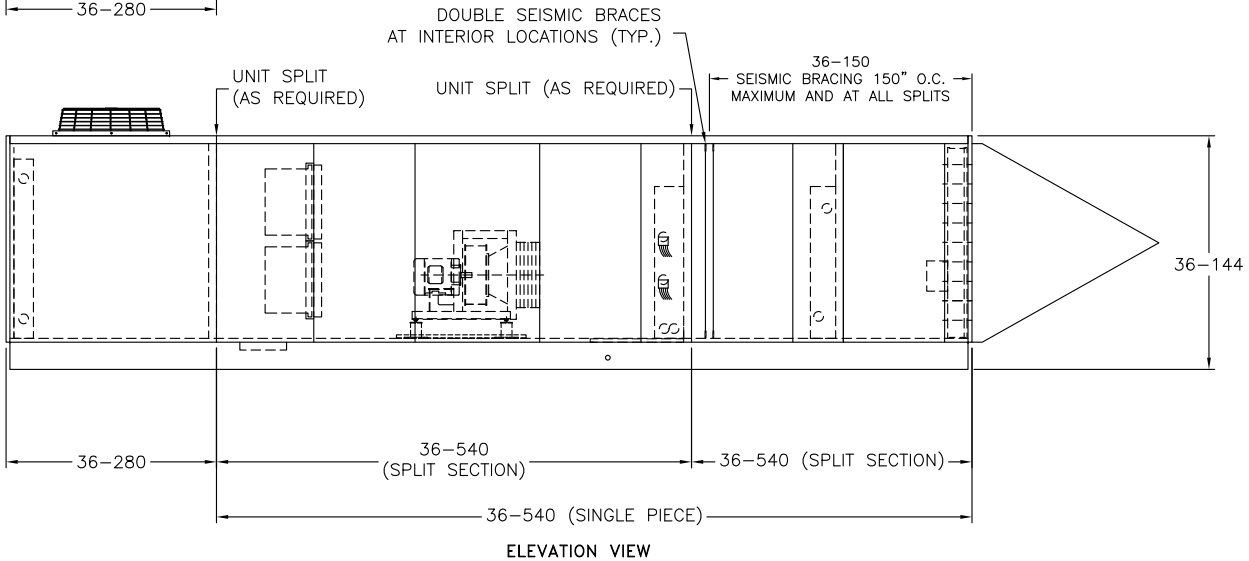

NOTES:

1. ANY UNIT CONSTRUCTION DESIGN AND MATERIALS OF CONSTRUCTION AS IDENTIFIED IN THE BODY OF THE REPORT SHALL BE ACCEPTABLE. NOTE THAT AN ADDITIONAL LAYER OF PERFORATED LINER WITH SOUND ABSORBING CHARACTERISTICS MAY BE APPLIED TO THE INTERIOR OF THE UNIT.

2. ANY APPROVED COMPONENT AS IDENTIFIED IN THE BODY OF THE REPORT SHALL BE ACCEPTABLE AND CAN BE PLACED IN ANY LOCATION WITHIN THE UNIT.

3. UNIT MAY BE SPLIT IN ANY NUMBER OF SECTIONS TO ACCOMMODATE TRANSIT TO ITS FINAL LOCATION OR AS REQUIRED BY THE SPECIFIC APPLICATION.

4. SEISMIC BRACING SHALL BE INSTALLED IN ACCORDANCE WITH DRAWING OSHPD-1100: SEISMIC BRACING. DOUBLE BRACING SHALL BE INSTALLED AT EACH REQUIRED LOCATION.

5. ALL DIMENSIONS MEASURED IN INCHES UNLESS OTHERWISE NOTED.

Innovent
Air Handling Equipment

ENGINEER: G. HELLESON		DESCRIPTION: UNIT DRAWING
DRAWN BY: CAS		PROJECT: OSHPD SEISMIC CERTIFICATION
JOB #: 2084740		TAG #: N/A — REV #:
FILE NAME: 2084740TATUV	DATE: 10/16/14	MODEL #: T-SHAPED UNIT WITH VESTIBULE

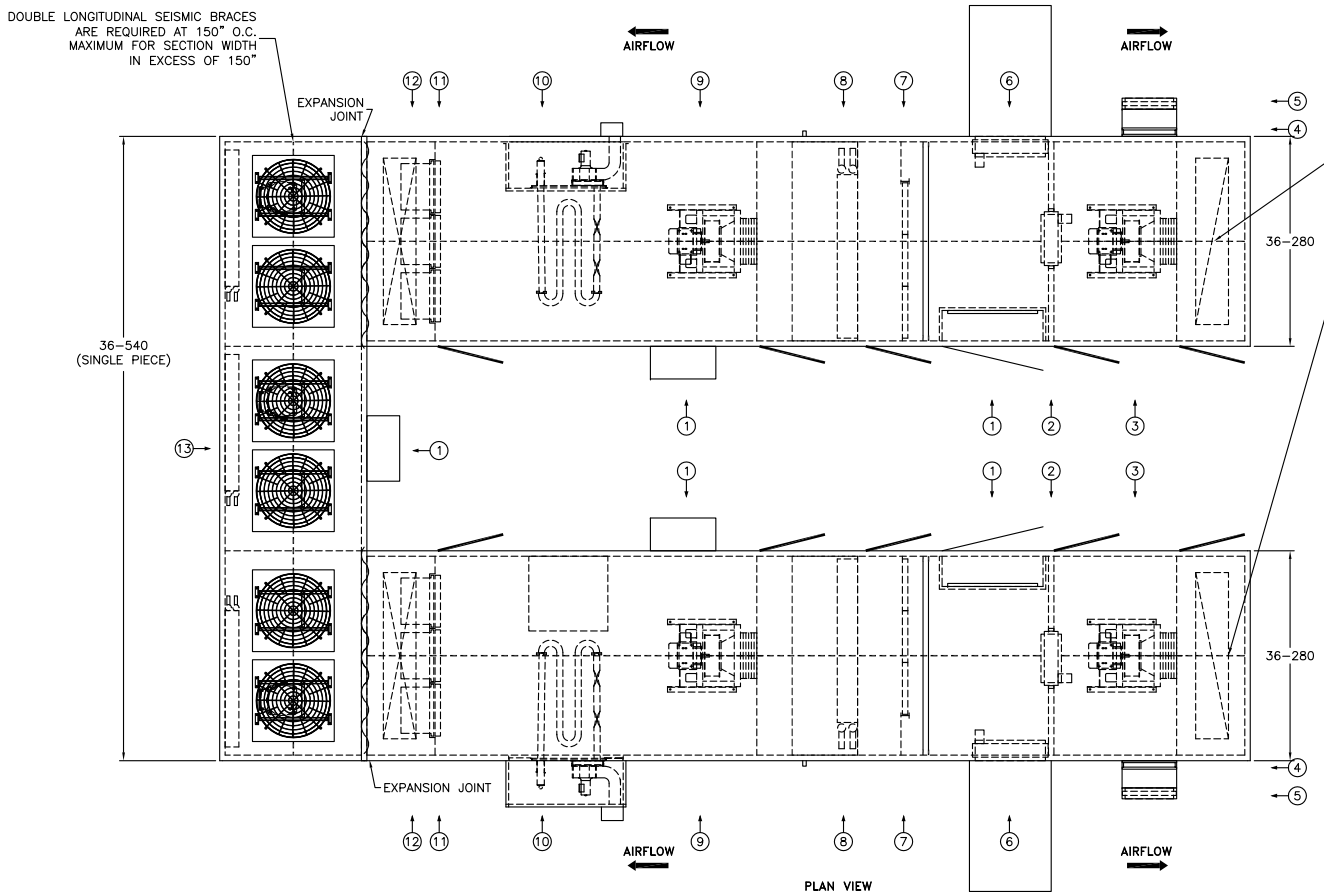

PLAN VIEW

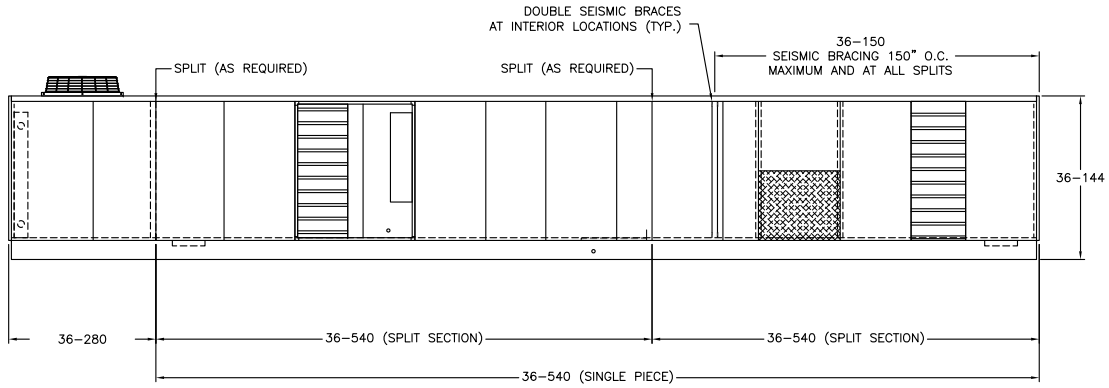

ELEVATION VIEW

COMPONENTS:

1.) CONTROL PANEL
2.) RECIRCULATION AIR DAMPER
3.) RETURN AIR BLOWER/MOTOR ASSEMBLY
4.) RELIEF AIR GRAVITY DAMPER
5.) RELIEF AIR LOUVER
6.) OUTSIDE AIR DAMPER
7.) SUPPLY AIR PRE-FILTER
8.) DX COIL
9.) SUPPLY BLOWER/MOTOR ASSEMBLY
10.) INDIRECT FIRED FURNACE
11.) SUPPLY AIR PRE-FILTER (FRONT ACCESS)
12.) SUPPLY AIR FINAL FILTER (FRONT ACCESS)
13.) AIR COOLED CONDENSING SECTION

NOTES:

1. ANY UNIT CONSTRUCTION DESIGN AND MATERIALS OF CONSTRUCTION AS IDENTIFIED IN THE BODY OF THE REPORT SHALL BE ACCEPTABLE. NOTE THAT AN ADDITIONAL LAYER OF PERFORATED LINER WITH SOUND ABSORBING CHARACTERISTICS MAY BE APPLIED TO THE INTERIOR OF THE UNIT.

2. ANY APPROVED COMPONENT AS IDENTIFIED IN THE BODY OF THE REPORT SHALL BE ACCEPTABLE AND CAN BE PLACED IN ANY LOCATION WITHIN THE UNIT.

3. UNIT MAY BE SPLIT IN ANY NUMBER OF SECTIONS TO ACCOMMODATE TRANSIT TO ITS FINAL LOCATION OR AS REQUIRED BY THE SPECIFIC APPLICATION.

4. SEISMIC BRACING SHALL BE INSTALLED IN ACCORDANCE WITH DRAWING OSHPD-1100: SEISMIC BRACING. DOUBLE BRACING SHALL BE INSTALLED AT EACH REQUIRED LOCATION.

5. ALL DIMENSIONS MEASURED IN INCHES UNLESS OTHERWISE NOTED.

Innovent
Air Handling Equipment

ENGINEER: G. HELLESON		DESCRIPTION: UNIT DRAWING
DRAWN BY: CAS		PROJECT: OSHPD SEISMIC CERTIFICATION
JOB #: 2084740		TAG #: N/A — REV #:
FILE NAME: 2084740UATU	DATE: 10/16/14	MODEL #: U-SHAPED UNIT

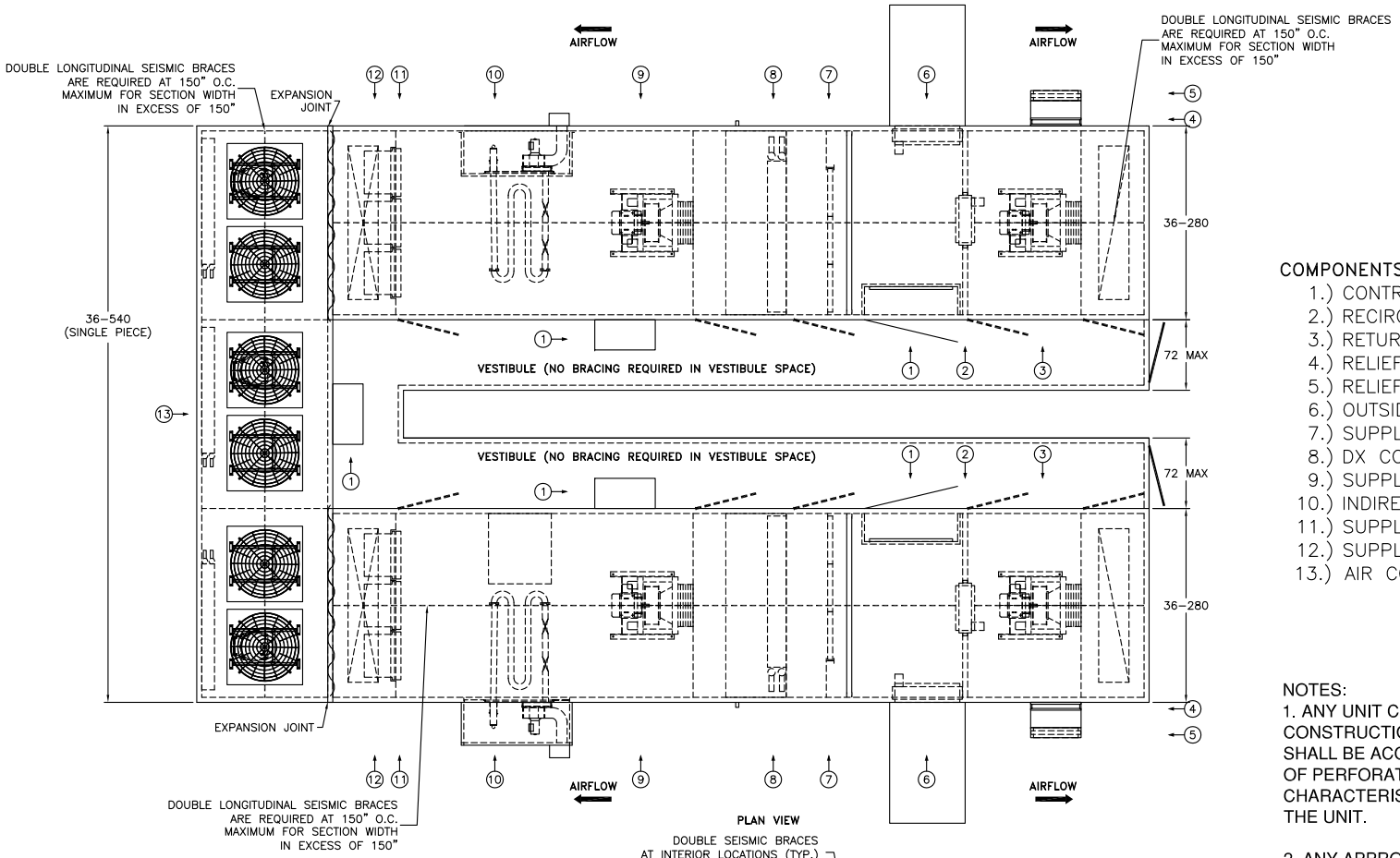

PLAN VIEW

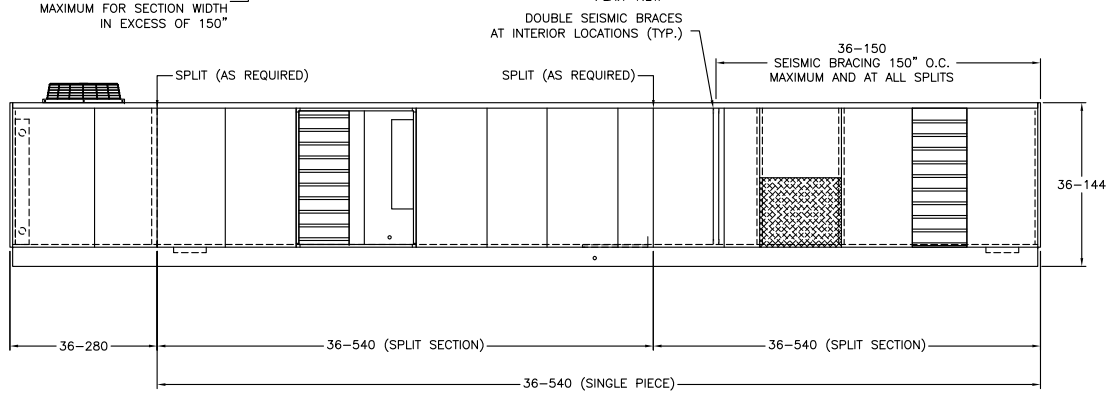

ELEVATION VIEW

COMPONENTS:

1.) CONTROL PANEL
2.) RECIRCULATION AIR DAMPER
3.) RETURN AIR BLOWER/MOTOR ASSEMBLY
4.) RELIEF AIR GRAVITY DAMPER
5.) RELIEF AIR LOUVER
6.) OUTSIDE AIR DAMPER
7.) SUPPLY AIR PRE-FILTER
8.) DX COIL
9.) SUPPLY BLOWER/MOTOR ASSEMBLY
10.) INDIRECT FIRED FURNACE
11.) SUPPLY AIR PRE-FILTER (FRONT ACCESS)
12.) SUPPLY AIR FINAL FILTER (FRONT ACCESS)
13.) AIR COOLED CONDENSING SECTION

NOTES:

1. ANY UNIT CONSTRUCTION DESIGN AND MATERIALS OF CONSTRUCTION AS IDENTIFIED IN THE BODY OF THE REPORT SHALL BE ACCEPTABLE. NOTE THAT AN ADDITIONAL LAYER OF PERFORATED LINER WITH SOUND ABSORBING CHARACTERISTICS MAY BE APPLIED TO THE INTERIOR OF THE UNIT.

2. ANY APPROVED COMPONENT AS IDENTIFIED IN THE BODY OF THE REPORT SHALL BE ACCEPTABLE AND CAN BE PLACED IN ANY LOCATION WITHIN THE UNIT.

3. UNIT MAY BE SPLIT IN ANY NUMBER OF SECTIONS TO ACCOMMODATE TRANSIT TO ITS FINAL LOCATION OR AS REQUIRED BY THE SPECIFIC APPLICATION.

4. SEISMIC BRACING SHALL BE INSTALLED IN ACCORDANCE WITH DRAWING OSHPD-1100: SEISMIC BRACING. DOUBLE BRACING SHALL BE INSTALLED AT EACH REQUIRED LOCATION.

5. ALL DIMENSIONS MEASURED IN INCHES UNLESS OTHERWISE NOTED.

Innovent
Air Handling Equipment

ENGINEER: G. HELLESON		DESCRIPTION: UNIT DRAWING
DRAWN BY: CAS		PROJECT: OSHPD SEISMIC CERTIFICATION
JOB #: 2084740		TAG #: N/A — REV #:
FILE NAME: 2084740UATUV	DATE: 10/16/14	MODEL #: U-SHAPED UNIT WITH VESTIBULE

SEISMIC RESTRAINT COMPONENT ASSEMBLY
CURB MOUNTED EQUIPMENT

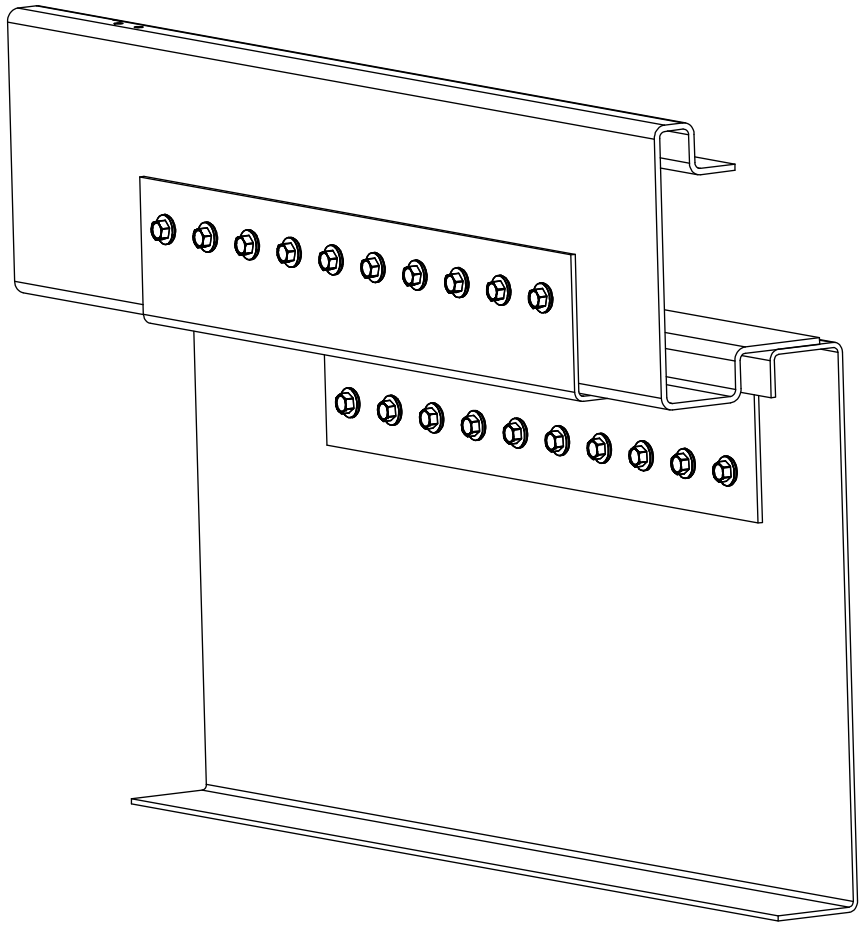

Innovent Air Handling Equipment	ENGINEER: GMH	DESCRIPTION: OSHPD - EQUIPMENT MOUNT REQUIREMENTS			
	DRAWN BY: GMH	PROJECT: OSHPD SEISMIC CERTIFICATION			REV # D
	DATE: 8/18/2014	SALES ORDER, LINE: 2084740	SECTION: N/A	TAG #	DRAWING NUMBER: OSHPD-1000
	FILE NAME: OSHPD-1000	MODEL # N/A			SHEET: 1 of 8

STEP 1

PLACE COMPONENT MARKED MB1 FLUSH TO THE DOWN BEND ON THE CURB EXTERIOR SURFACE.

PLACE ONE OF EACH COMPONENT AT NO MORE THAN 12" FROM EACH CORNER AND EQUALLY SPACE AROUND PERIMETER OF UNIT WITH INTERVALS NOT TO EXCEED 28 INCHES.

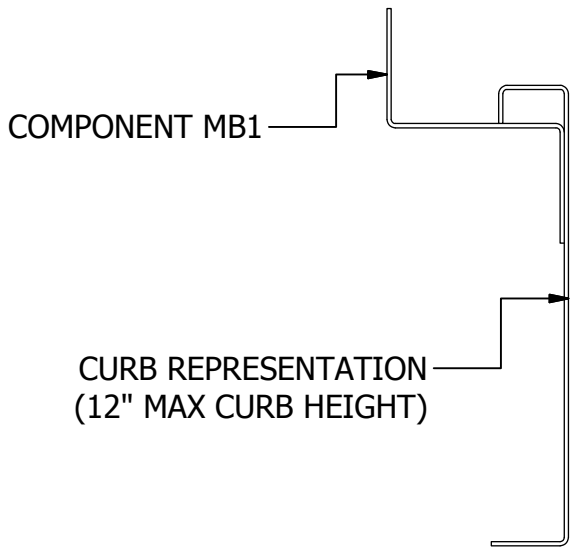

STEP 2

SECURE COMPONENT MARKED MB1 AT EACH LOCATION.

SECURE TO CURB WITH A QUANTITY OF 10 #1/4-14 x 1" LONG FASTENERS AT THE PRE-PUNCHED HOLE LOCATIONS IN COMPONENT MARKED MB1.

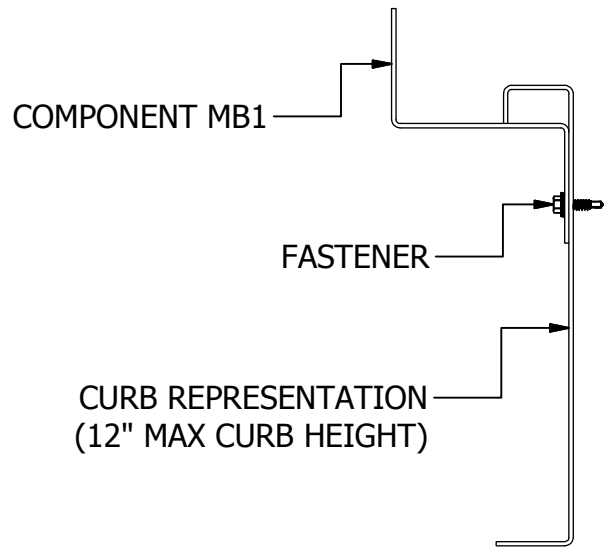

Innovent
Air Handling Equipment

ENGINEER: GMH	DESCRIPTION: OSHPD - EQUIPMENT MOUNT REQUIREMENTS			
DRAWN BY: GMH	PROJECT: OSHPD SEISMIC CERTIFICATION			REV # D
DATE: 8/18/2014	SALES ORDER, LINE: 2084740	SECTION: N/A	TAG #	DRAWING NUMBER: OSHPD-1000
FILE NAME: OSHPD-1000	MODEL # N/A			SHEET: 2 of 8

STEP 3

COMPLETE ALL OTHER INSTALLATION REQUIREMENTS, SUCH AS CURB GASKETING, AS RECOMMENDED BY THE ORIGINAL EQUIPMENT MANUFACTURER. PLACE AIR HANDLING EQUIPMENT ONTO THE CURB

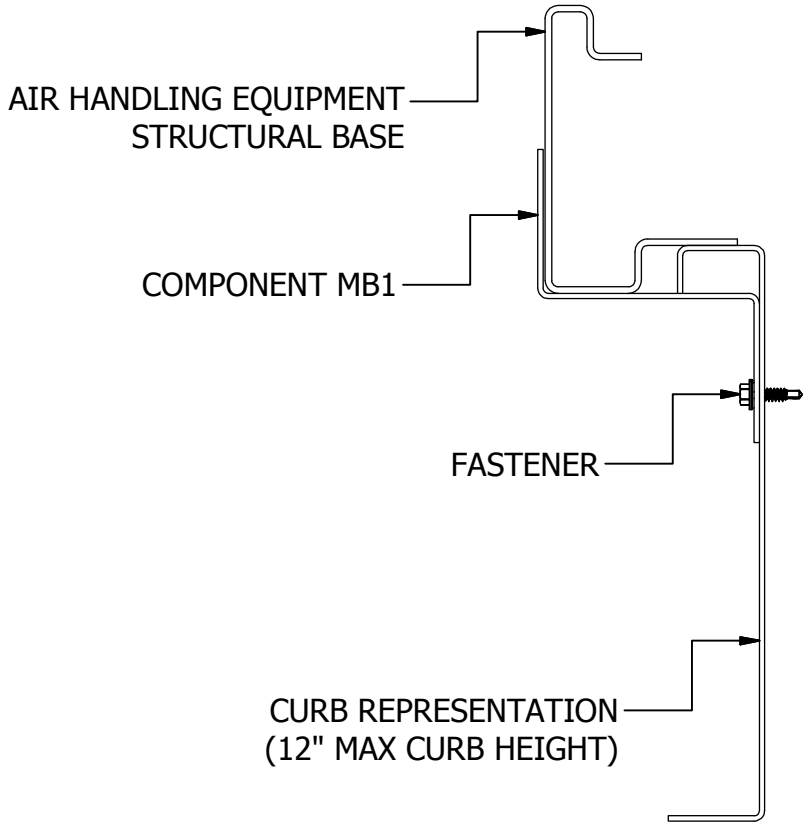

STEP 4

SECURE MB1 COMPONENT TO AIR HANDLING EQUIPMENT STRUCTURAL BASE WITH PREPUNCHED HOLES ON COMPONENTS MB1. USE A QUANTITY OF 10 #1/4-14 x 1" LONG FASTENERS.

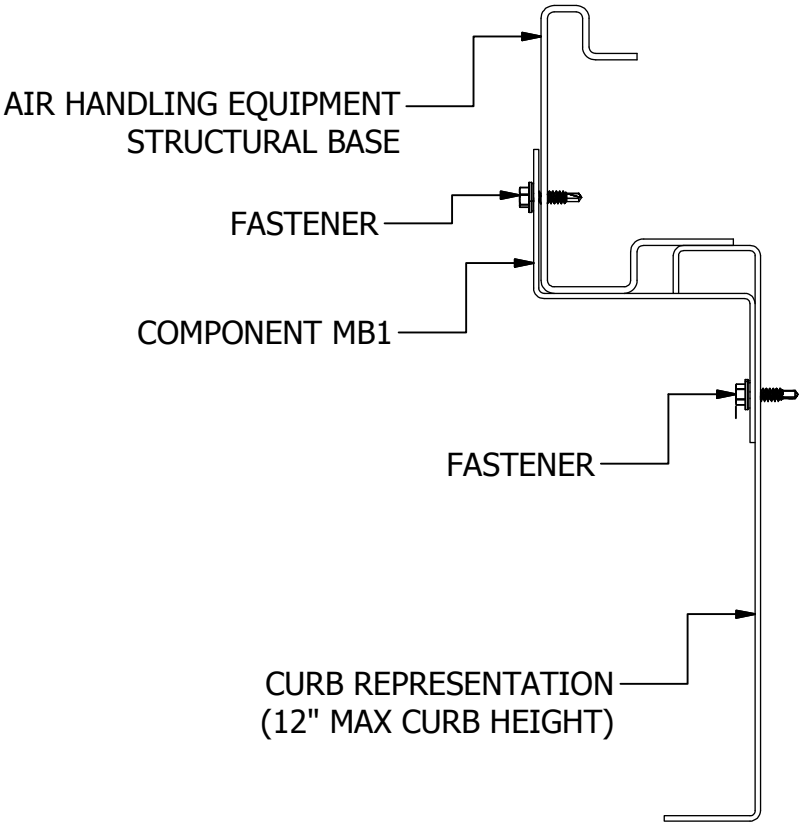

Innovent Air Handling Equipment	ENGINEER: GMH	DESCRIPTION: OSHPD - EQUIPMENT MOUNT REQUIREMENTS			
	DRAWN BY: GMH	PROJECT: OSHPD SEISMIC CERTIFICATION			REV # D
	DATE: 8/18/2014	SALES ORDER, LINE: 2084740	SECTION: N/A	TAG #	DRAWING NUMBER: OSHPD-1000
	FILE NAME: OSHPD-1000	MODEL # N/A			SHEET: 3 of 8

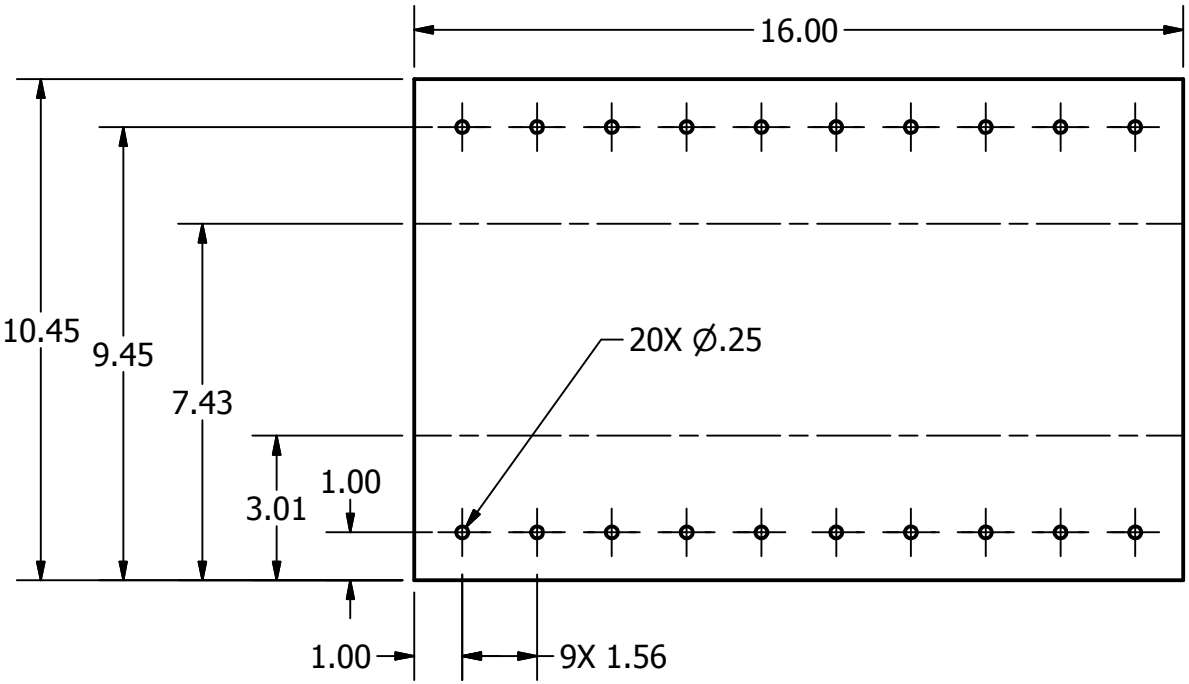

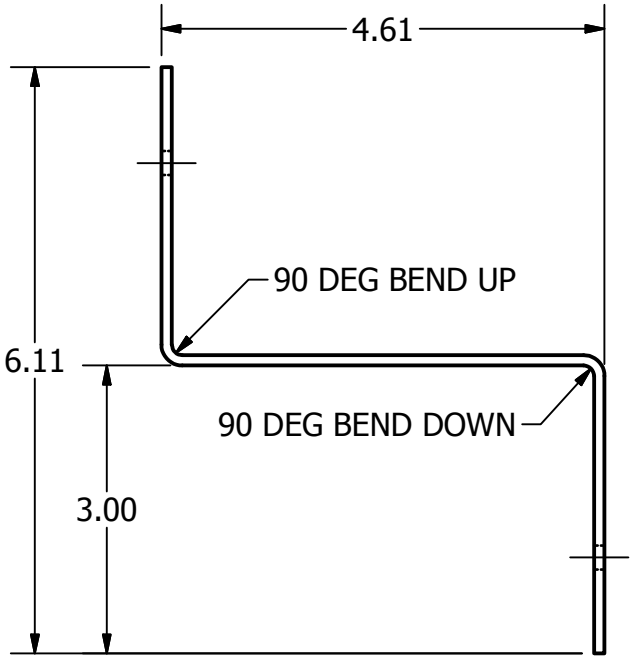

MATERIAL: 12 GAUGE GALVANIZED STEEL
PART MARKING: MB1

Innovent Air Handling Equipment	ENGINEER: GMH	DESCRIPTION: OSHPD - EQUIPMENT MOUNT REQUIREMENTS			
	DRAWN BY: GMH	PROJECT: OSHPD SEISMIC CERTIFICATION			REV # D
	DATE: 8/18/2014	SALES ORDER, LINE: 2084740	SECTION: N/A	TAG #	DRAWING NUMBER: OSHPD-1000
	FILE NAME: OSHPD-1000	MODEL # N/A			SHEET: 4 of 8

SEISMIC RESTRAINT COMPONENT ASSEMBLY
NON-CURB MOUNTED EQUIPMENT

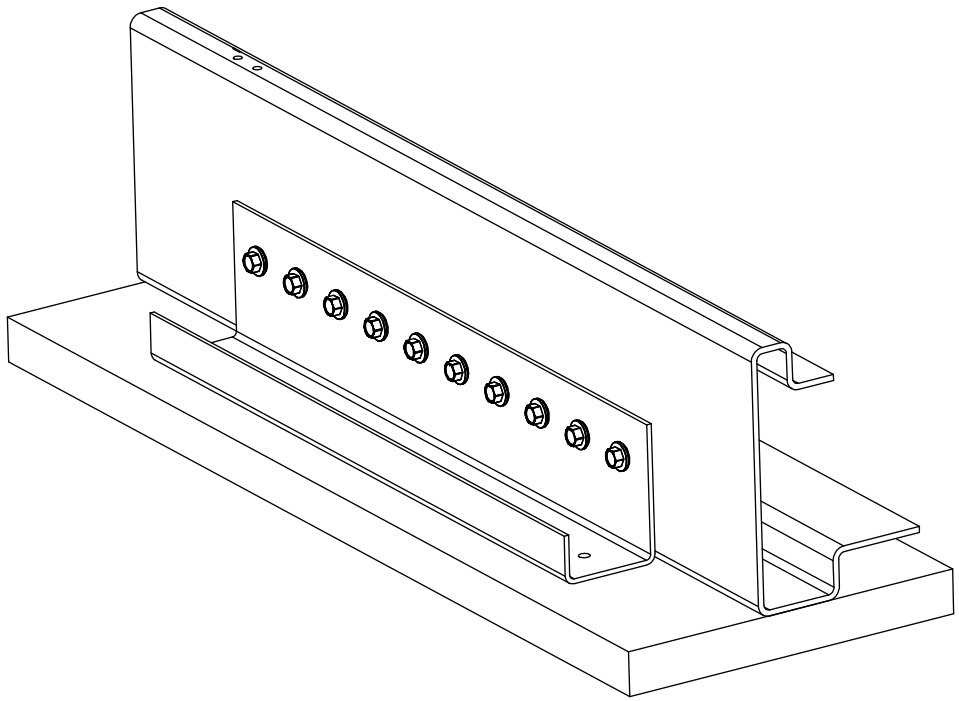

Innovent Air Handling Equipment	ENGINEER: GMH	DESCRIPTION: OSHPD - EQUIPMENT MOUNT REQUIREMENTS			
	DRAWN BY: GMH	PROJECT: OSHPD SEISMIC CERTIFICATION			REV # D
	DATE: 8/18/2014	SALES ORDER, LINE: 2084740	SECTION: N/A	TAG #	DRAWING NUMBER: OSHPD-1000
	FILE NAME: OSHPD-1000	MODEL # N/A			SHEET: 5 of 8

STEP 1

PLACE THE AIR HANDLING EQUIPMENT ONTO THE SURFACE DESIGNED TO CARRY THE LOAD OF THE EQUIPMENT; AND, IN THE FINAL INSTALLED LOCATION.

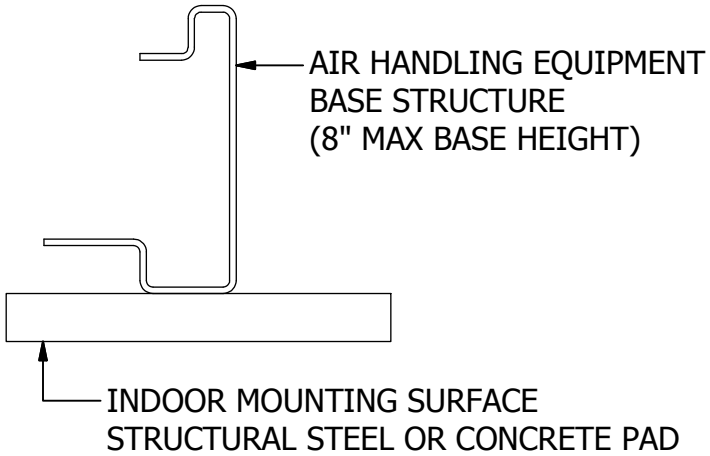

STEP 2

PLACE COMPONENT MARKED MB3 ON THE TOP OF THE NON-CURB SURFACE AND BUTT TO THE AIR HANDLING EQUIPMENT STRUCTURAL BASE.

PLACE ONE OF EACH COMPONENT AT NO MORE THAN 12" FROM EACH CORNER AND EQUALLY SPACE AROUND PERIMETER OF UNIT WITH INTERVALS NOT TO EXCEED 33 INCHES.

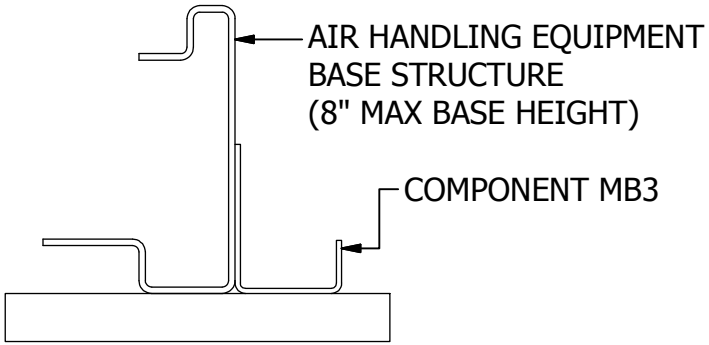

Innovent Air Handling Equipment	ENGINEER: GMH	DESCRIPTION: OSHPD - EQUIPMENT MOUNT REQUIREMENTS			
	DRAWN BY: GMH	PROJECT: OSHPD SEISMIC CERTIFICATION			REV # D
	DATE: 8/18/2014	SALES ORDER, LINE: 2084740	SECTION: N/A	TAG #	DRAWING NUMBER: OSHPD-1000
	FILE NAME: OSHPD-1000	MODEL # N/A			SHEET: 6 of 8

STEP 3

SECURE COMPONENT MB3 TO
THE AIR HANDLING EQUIPMENT
STRUCTURAL BASE WITH A QUANTITY
OF 10 #1/4-14 X 1" LONG FASTENERS
IN THE PRE-PUNCHED HOLES PROVIDED
ON COMPONENT MB3.

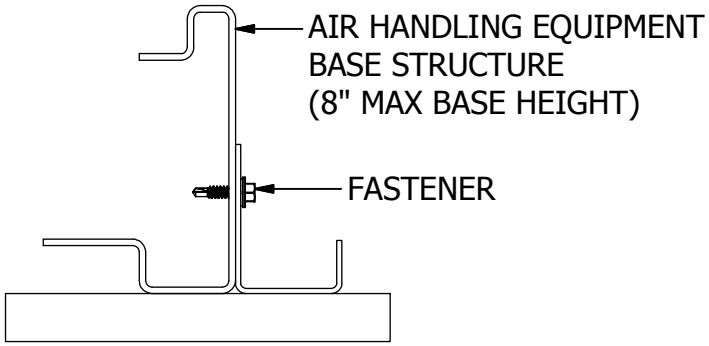

STEP 4

STRUCTURAL STEEL SURFACE:
SECURE MB3 COMPONENT TO STRUCTURAL STEEL
WITH ANCHORAGE METHOD APPROVED FOR SEISMIC
REQUIREMENTS OF INSTALLED LOCATION.

CONCRETE PAD SURFACE:
SECURE MB3 COMPONENT TO CONCRETE PAD
SURFACE WITH ANCHORAGE METHOD APPROVED FOR SEISMIC
REQUIREMENTS OF INSTALLED LOCATION.

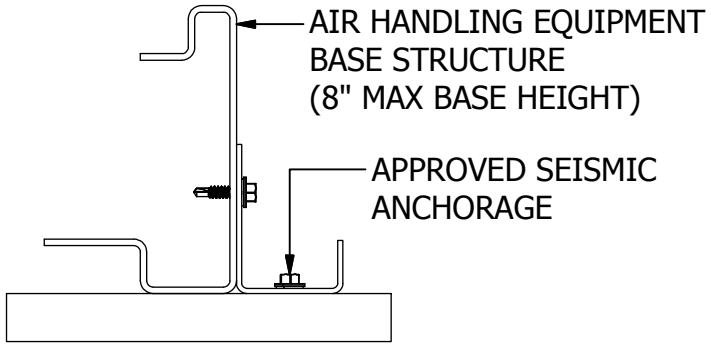

Innovent
Air Handling Equipment

ENGINEER: GMH	DESCRIPTION: OSHPD - EQUIPMENT MOUNT REQUIREMENTS			
DRAWN BY: GMH	PROJECT: OSHPD SEISMIC CERTIFICATION			REV # D
DATE: 8/18/2014	SALES ORDER, LINE: 2084740	SECTION: N/A	TAG #	DRAWING NUMBER: OSHPD-1000
FILE NAME: OSHPD-1000	MODEL # N/A			SHEET: 7 of 8

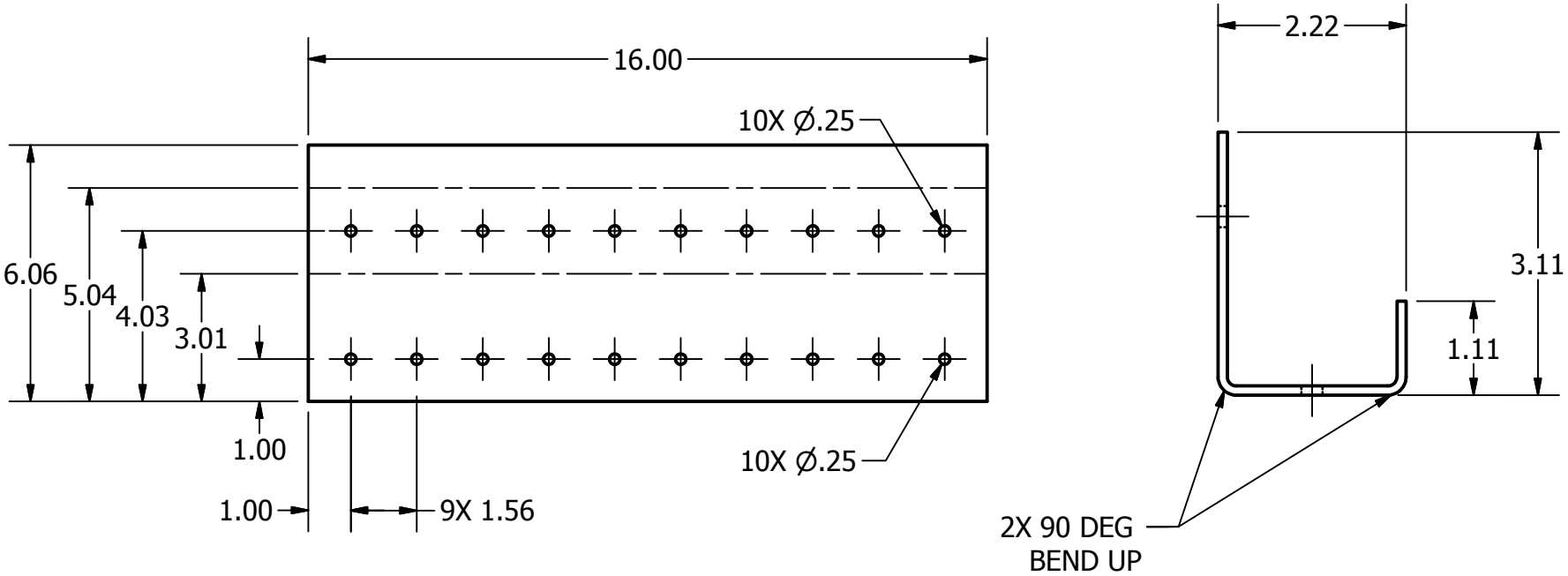

MATERIAL: 12 GAUGE GALVANIZED STEEL
PART MARKING: MB3

Innovent Air Handling Equipment	ENGINEER: GMH	DESCRIPTION: OSHPD - EQUIPMENT MOUNT REQUIREMENTS			
	DRAWN BY: GMH	PROJECT: OSHPD SEISMIC CERTIFICATION			REV # D
	DATE: 8/18/2014	SALES ORDER, LINE: 2084740	SECTION: N/A	TAG #	DRAWING NUMBER: OSHPD-1000
	FILE NAME: OSHPD-1000	MODEL # N/A			SHEET: 8 of 8

CURB DETAIL DRAWING

QUANTITY	TAG(S)	DIMENSIONAL DATA	H	MATERIAL	UNIT WT.	CURB WT.
---	PER JOB REQUIREMENTS	**PER JOB REQUIREMENTS**	12"MAX.	GALV.	PER JOB REQUIREMENTS	

DETAIL B (TYPICAL)
INSULATION NOT SHOWN

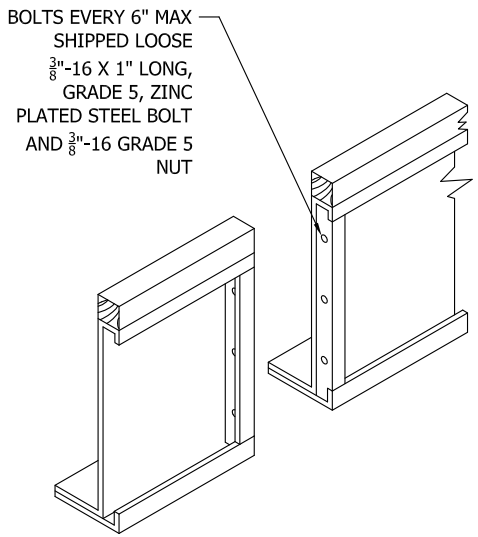

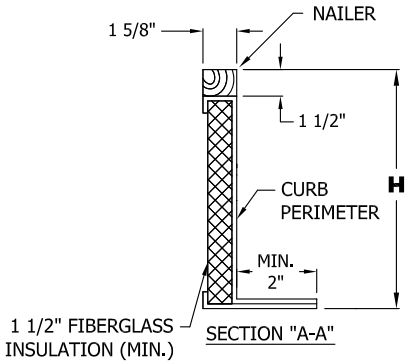

SECTION "A-A"

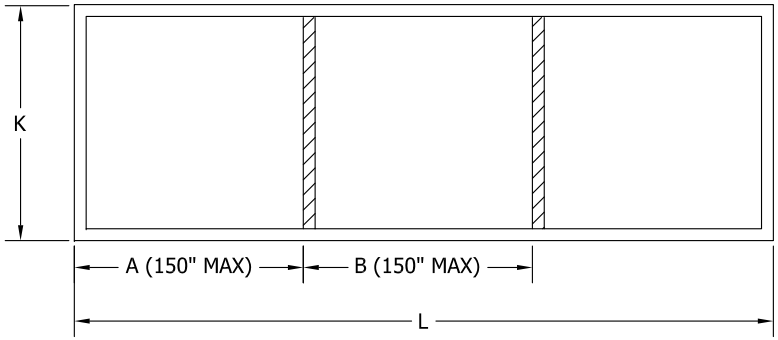

PLAN VIEW

CROSS MEMBER KEY

RECESSED 1" BELOW PERIMETER

CROSS MEMBERS AT SECTION SPLIT(S) NEED TO BE STRUCTURAL AND SUPPORTED FROM BELOW

1. CROSS MEMBERS MATCH THE CROSS SECTION SHOWN IN A-A, WITH A HEIGHT, H, VALUE ONE INCH LESS THAN THE CURB PERIMETER (11 INCHES MAXIMUM)
2. CROSS MEMBERS MUST BE INSTALLED OVER A STRUCTURAL ROOF MEMBER PER THE STRUCTURAL ENGINEER OF RECORD.
3. ATTACHMENT OF CROSS MEMBERS TO STRUCTURAL ROOF MEMBERS SHALL MATCH ATTACHMENT OF CURB PERIMETER TO STRUCTURE.
4. CROSS MEMBERS ARE REQUIRED WHEN SECTION SPLITS ARE PRESENT IN THE EQUIPMENT DESIGN OR AT A MAXIMUM SPACING OF 150 INCHES.

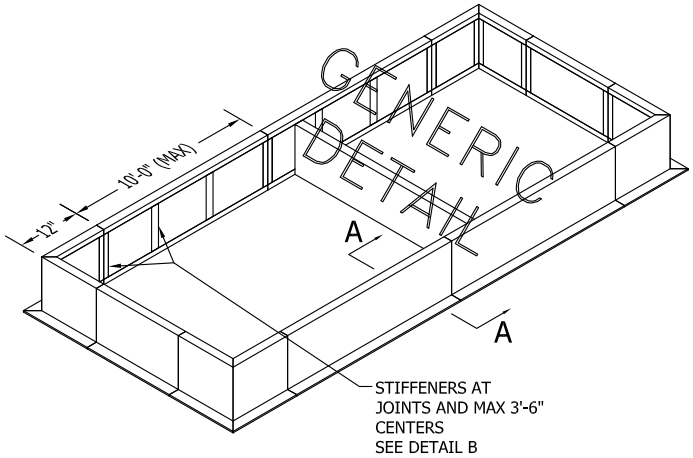

NOTES:
1.) NOT TO SCALE
2.) CURB SHIPPED KNOCKED DOWN FOR FIELD ASSEMBLY.
3.) GASKET MATERIAL SUPPLIED IN ROLLS. CUT TO LENGTH AND INSTALL IN FIELD AFTER ASSEMBLY.

Innovent
Air Handling Equipment

ENGINEER:		DESCRIPTION: CURB DETAIL DRAWING
DRAWN BY: CAS		PROJECT:
JOB # 2084740		TAG # SEE SCHEDULE ABOVE — REV #:
FILE NAME: 2084740CS00	DATE: 8/18/14	MODEL # SEE UNIT DRAWING FOR TAG TO MODEL # REFERENCE

UNIT CONSTRUCTION: SEISMIC BRACING

THE FOLLOWING BRACING MUST BE PLACED AT ALL SECTION SPLIT OPENINGS AND INTERNAL TO THE UNIT AT DISTANCES NOT TO EXCEED 150 INCHES. BRACING SHALL BE PLACED IN A DOUBLE CONFIGURATION, WITH BRACING BACK TO BACK AT THE PREVIOUSLY IDENTIFIED DIMENSIONS.

THE INFORMATION DEFINED ON THIS DRAWING MUST BE INCORPORATED INTO ALL PRODUCTS DESIGNED AND FABRICATED TO MEET OSHPD SEISMIC REQUIREMENTS. CHANGES TO THIS DOCUMENT ARE NOT PERMITTED AND QUALITY CONTROL DOCUMENTATION MUST REFLECT THAT THE ACCOMMODATIONS DEFINED ARE REFLECTED IN SAID PRODUCTS PRIOR TO SHIPMENT.

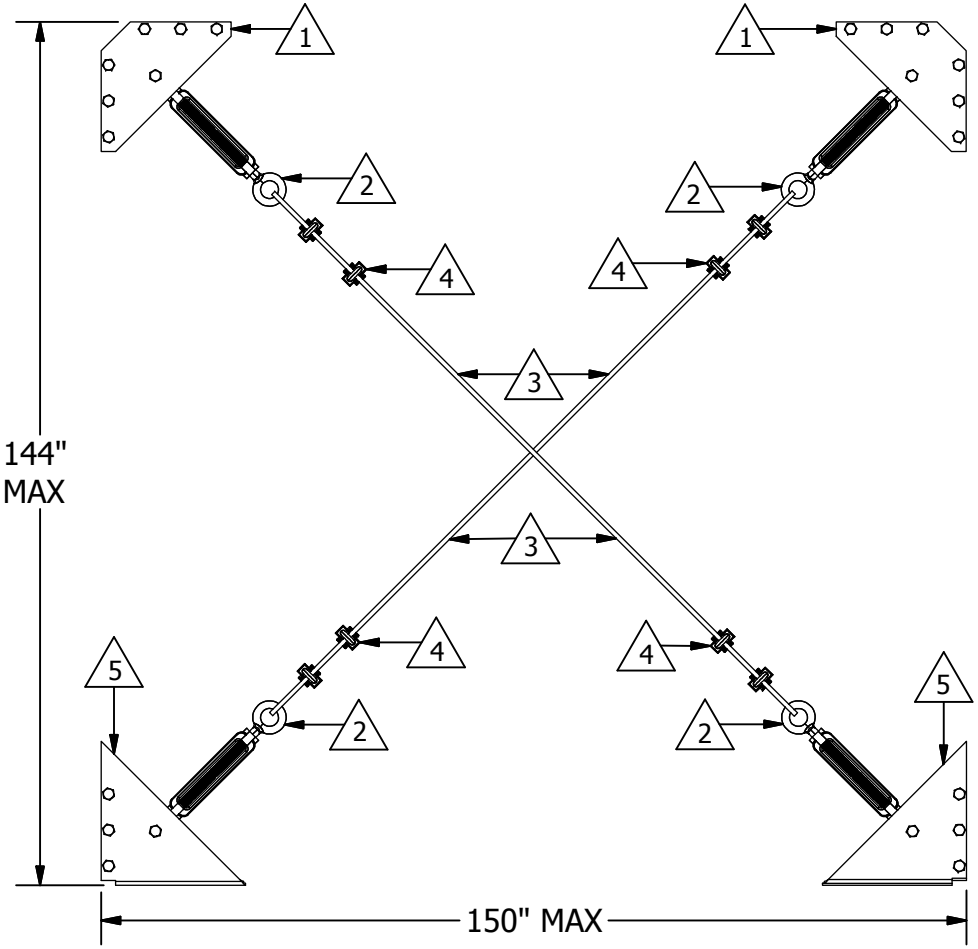

NOTES:

1. UPPER CORNER BRACKETS SHALL BE SECURED TO UNIT FRAMEWORK WITH MINIMUM THREE 1/2-13 GRADE 5 BOLTS IN THE HORIZONTAL AND VERTICAL PLANES.

2. EYE AND EYE TURN BUCKLES SHALL BE USED AT EACH CORNER LOCATION, SECURED TO CORNER BRACKETS WITH 1/2-13 GRADE 5 BOLTS. EACH TURN BUCKLE SHALL BE 5/8-11 THREAD WITH 6 INCH MAXIMUM ADJUSTMENT WITH A MANUFACTURER SPECIFIED WORKING LOAD LIMIT OF 3500 LBS.

3. WIRE ROPE SHALL BE USED BETWEEN EACH TURN BUCKLE. ROPE SHALL BE 1 X 7 STRAND, 5/16 INCH DIAMETER, WITH A 11,200 LBS BREAK STRENGTH.

4. WIRE ROPE SHALL BE STRUNG THROUGH EACH TURN BUCKLE AND LOOPED AROUND A MINIMUM DISTANCE OF SIX INCHES. THE OVER LAP OF THE WIRE ROPE SHALL BE SECURED WITH A MINIMUM OF TWO 5/16 INCH FORGED STEEL WIRE ROPE CLIPS.

5. LOWER CORNER BRACKETS SHALL BE SECURED IN THE VERTICAL PLANE TO UNIT FRAMEWORK WITH MINIMUM THREE 1/2-13 GRADE 5 BOLTS. IN THE HORIZONTAL PLANE, THE LOWER BRACKETS SHALL BE SECURED TO THE UNIT BASE WITH A MINIMUM OF TEN #10-16 X 3/4" SHEET METAL FASTENERS.

Innovent
Air Handling Equipment

ENGINEER: GMH	DESCRIPTION: OSHPD: SEISMIC BRACING			
DRAWN BY: GMH	PROJECT: OSHPD SEISMIC CERTIFICATION			REV # D
DATE: 10/16/2014	SALES ORDER, LINE: 2084740	SECTION: N/A	TAG #	DRAWING NUMBER: OSHPD-1100
FILE NAME: OSHPD-1100	MODEL # N/A			SHEET: 1 of 6

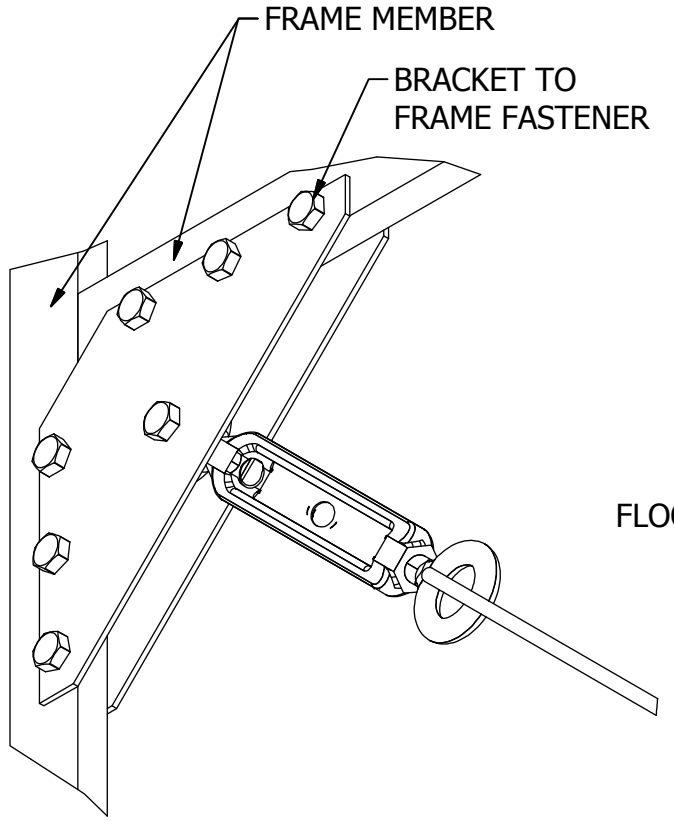

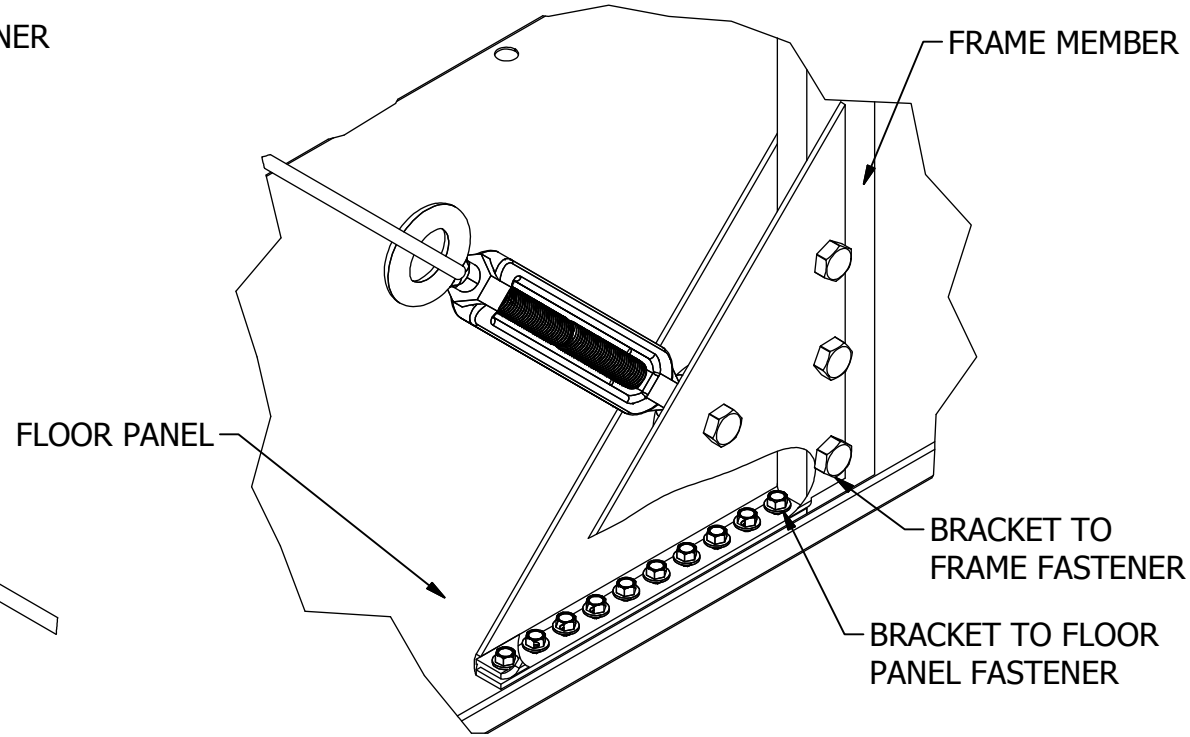

UPPER BRACKET FRAME ATTACHMENT

FASTENERS SHALL BE AS DEFINED
ON SHEET 1 OF 6 OF DRAWING OSHPD-1100.

LOWER BRACKET FRAME AND BASE ATTACHMENT

FASTENERS SHALL BE AS DEFINED
ON SHEET 1 OF 6 OF DRAWING OSHPD-1100.

Innovent Air Handling Equipment	ENGINEER: GMH	DESCRIPTION: OSHPD: SEISMIC BRACING			
	DRAWN BY: GMH	PROJECT: OSHPD SEISMIC CERTIFICATION			REV # D
	DATE: 10/16/2014	SALES ORDER, LINE: 2084740	SECTION: N/A	TAG #	DRAWING NUMBER: OSHPD-1100
	FILE NAME: OSHPD-1100	MODEL # N/A			SHEET: 2 of 6

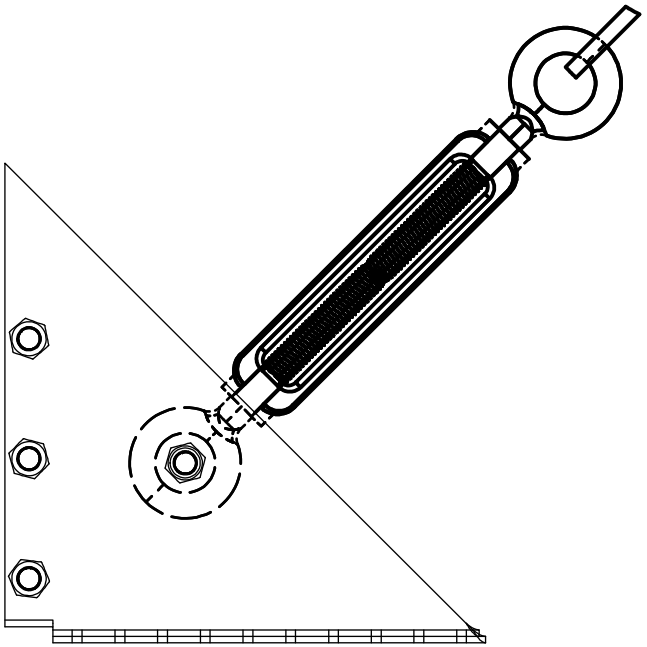

TURNBUCKLE ATTACHMENT

FASTENERS SHALL BE AS DEFINED
ON SHEET 1 OF 6 OF DRAWING OSHPD-1100.
VIEW SHOWN ABOVE IS REPRESENTATIVE
OF THE LOWER BRACKET, TURNBUCKLE
ASSEMBLY OF UPPER BRACKET SHALL BE
IDENTICAL.

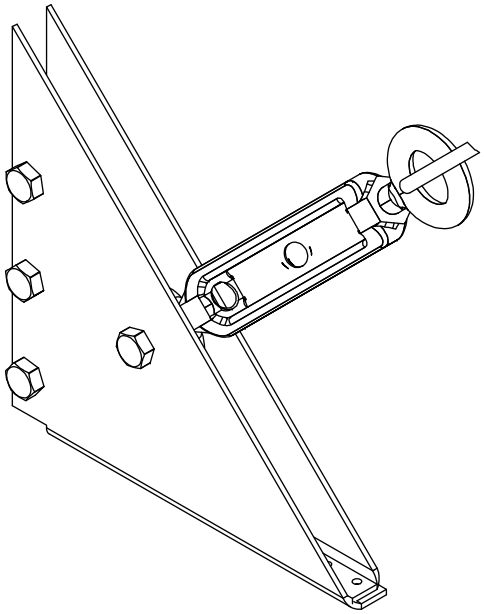

ISOMETRIC TURNBUCKLE ATTACHMENT

FASTENERS SHALL BE AS DEFINED
ON SHEET 1 OF 6 OF DRAWING OSHPD-1100.
VIEW SHOWN ABOVE IS REPRESENTATIVE
OF THE LOWER BRACKET, TURNBUCKLE
ASSEMBLY OF UPPER BRACKET SHALL BE
IDENTICAL.

Innovent
Air Handling Equipment

ENGINEER: GMH	DESCRIPTION: OSHPD: SEISMIC BRACING			
DRAWN BY: GMH	PROJECT: OSHPD SEISMIC CERTIFICATION			REV # D
DATE: 10/16/2014	SALES ORDER, LINE: 2084740	SECTION: N/A	TAG #	DRAWING NUMBER: OSHPD-1100
FILE NAME: OSHPD-1100	MODEL # N/A			SHEET: 3 of 6

SEISMIC BRACING - UPPER CORNER BRACKET
MATERIAL: 10 GAUGE GALVANIZED STEEL

Ø0.50" HOLES AS DEFINED FOR SECURING BRACKET TO UNIT FRAME

Ø0.63" HOLE AS DEFINED FOR SECURING TURN BUCKLE

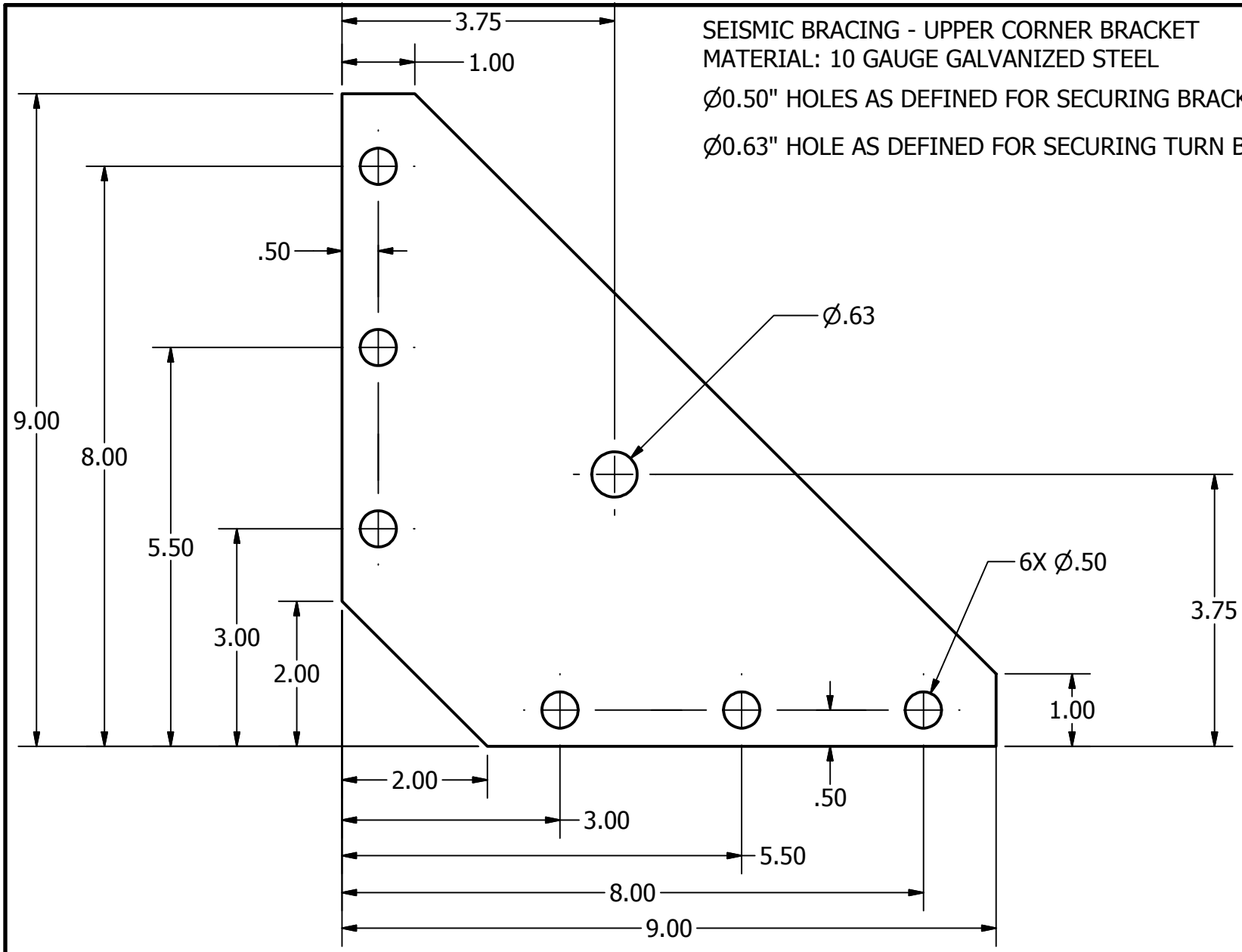

Innovent Air Handling Equipment	ENGINEER: GMH	DESCRIPTION: OSHPD: SEISMIC BRACING			
	DRAWN BY: GMH	PROJECT: OSHPD SEISMIC CERTIFICATION			REV # D
	DATE: 10/16/2014	SALES ORDER, LINE: 2084740	SECTION: N/A	TAG #	DRAWING NUMBER: OSHPD-1100
	FILE NAME: OSHPD-1100	MODEL # N/A			SHEET: 4 of 6

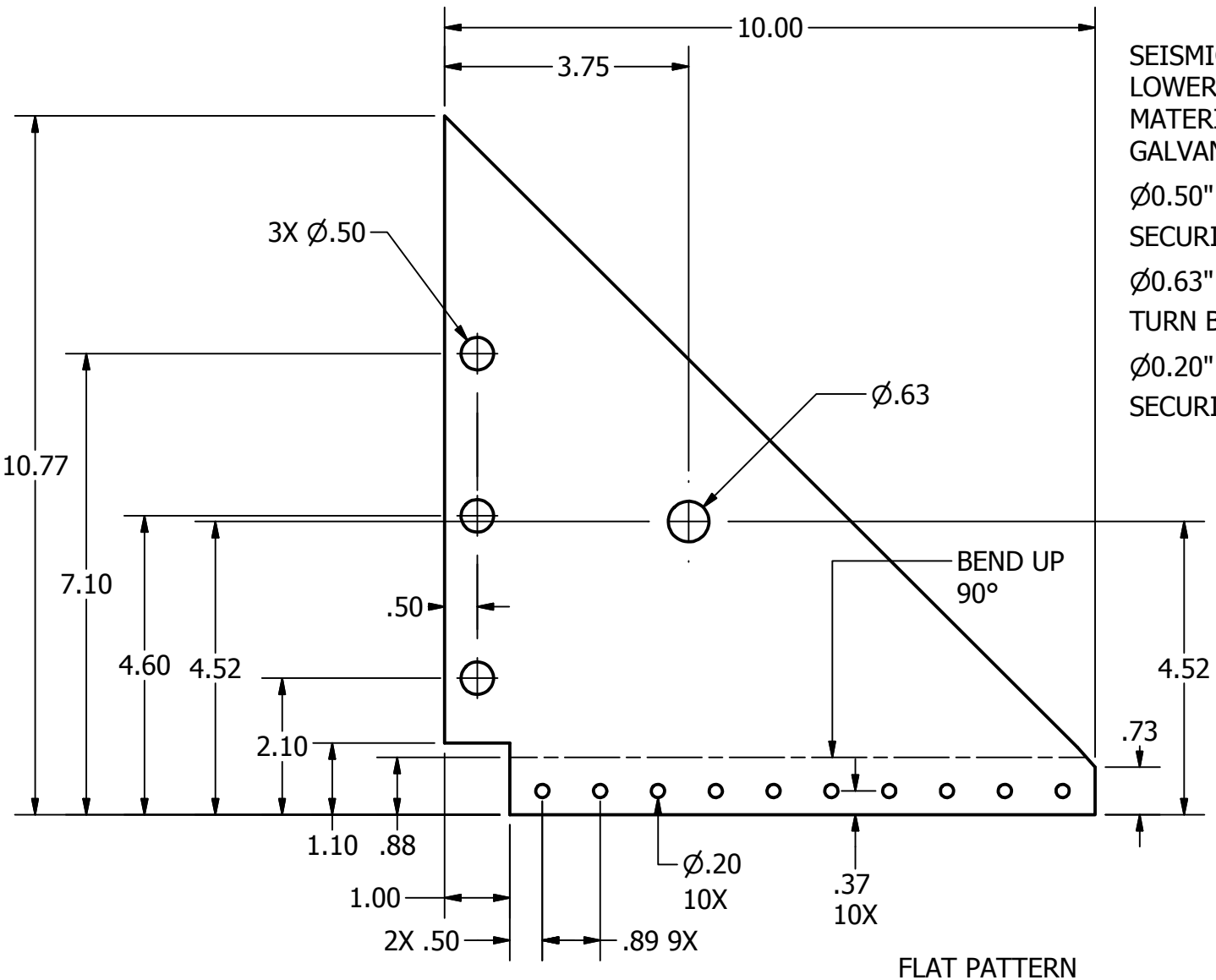

FLAT PATTERN

SEISMIC BRACING -
LOWER CORNER BRACKET 1
MATERIAL: 10 GAUGE
GALVANIZED STEEL

Ø0.50" HOLES AS DEFINED FOR SECURING BRACKET TO UNIT FRAME

Ø0.63" HOLE AS DEFINED FOR SECURING TURN BUCKLE

Ø0.20" HOLES AS DEFINED FOR SECURING BRACKET TO FLOOR

Innovent
Air Handling Equipment

ENGINEER: GMH	DESCRIPTION: OSHPD: SEISMIC BRACING			
DRAWN BY: GMH	PROJECT: OSHPD SEISMIC CERTIFICATION			REV # D
DATE: 10/16/2014	SALES ORDER, LINE: 2084740	SECTION: N/A	TAG #	DRAWING NUMBER: OSHPD-1100
FILE NAME: OSHPD-1100	MODEL # N/A			SHEET: 5 of 6

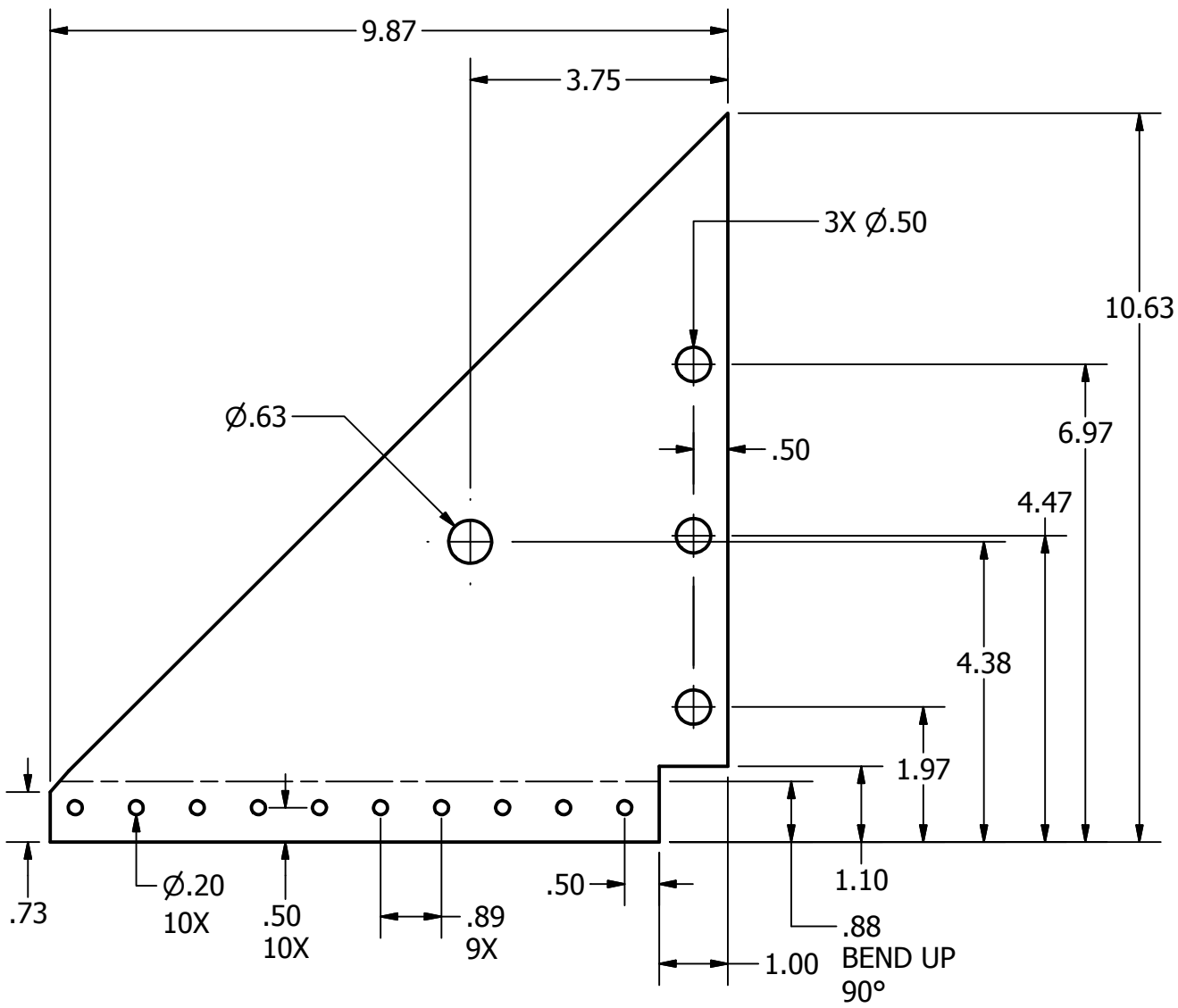

SEISMIC BRACING -
LOWER CORNER BRACKET 2
MATERIAL: 10 GAUGE
GALVANIZED STEEL

Ø0.50" HOLES AS DEFINED FOR SECURING BRACKET TO UNIT FRAME

Ø0.63" HOLE AS DEFINED FOR SECURING TURN BUCKLE

Ø0.20" HOLES AS DEFINED FOR SECURING BRACKET TO FLOOR

Innovent Air Handling Equipment	ENGINEER: GMH	DESCRIPTION: OSHPD: SEISMIC BRACING			
	DRAWN BY: GMH	PROJECT: OSHPD SEISMIC CERTIFICATION			REV # D
	DATE: 10/16/2014	SALES ORDER, LINE: 2084740	SECTION: N/A	TAG #	DRAWING NUMBER: OSHPD-1100
	FILE NAME: OSHPD-1100	MODEL # N/A			SHEET: 6 of 6

Seismic Bracing for Section Split Openings - Turnbuckle Detail

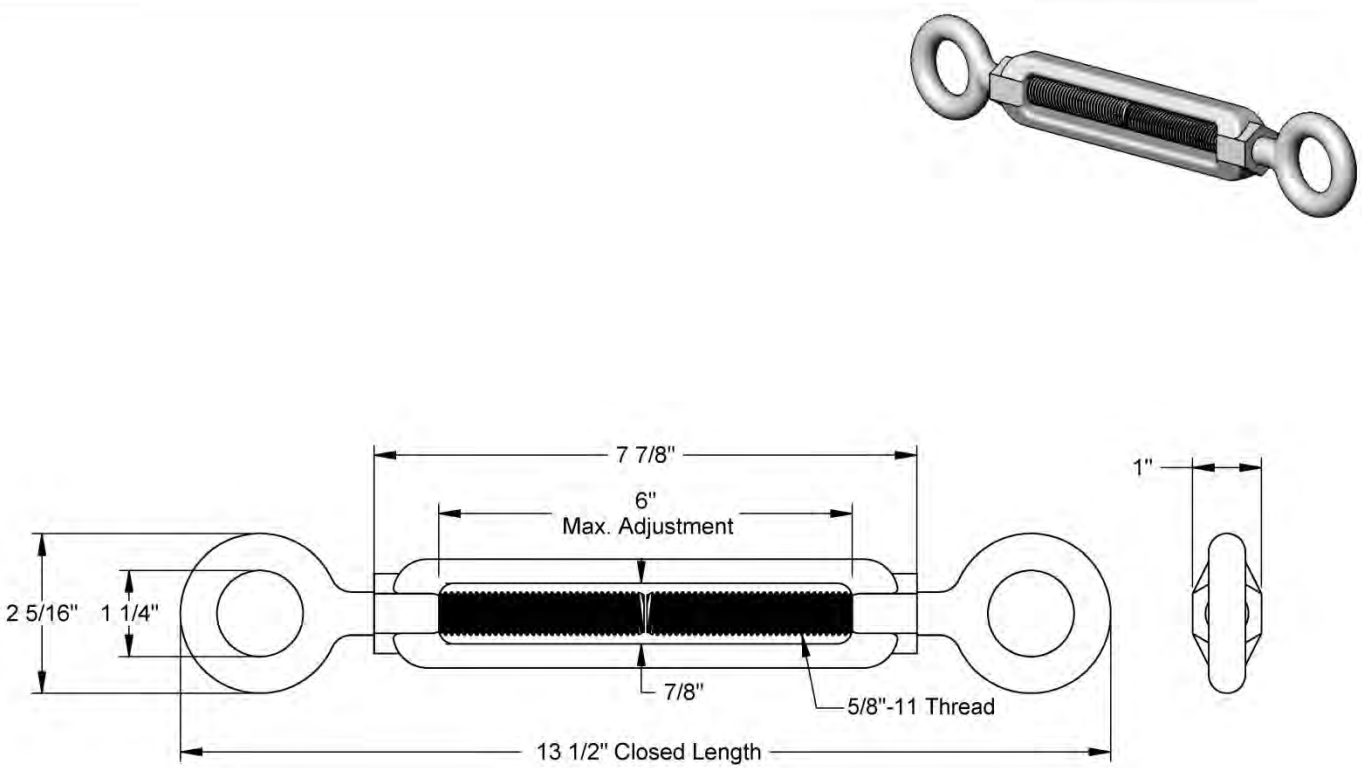

McMASTER-CARR® CAD
http://www.mcmaster.com
© 2009 McMaster-Carr Supply Company
Information in this drawing is provided for reference only.

PART NUMBER 2999T57

Forged Galvanized Steel
Eye and Eye Turnbuckle

AIR COOLED CONDENSING UNIT

ANGLED CONDENSING COIL INSTALLATION, STANDARD CONSTRUCTION PRACTICES TO BE ADHERED TO UNLESS OTHERWISE DEFINED.

VERTICAL CONDENSING COIL INSTALLATION, STANDARD CONSTRUCTION PRACTICES TO BE ADHERED TO, NO ADDITIONAL ACCOMMODATIONS REQUIRED.

THE INFORMATION DEFINED ON THIS DRAWING MUST BE INCORPORATED INTO ALL PRODUCTS DESIGNED AND FABRICATED TO MEET OSHPD SEISMIC REQUIREMENTS. CHANGES TO THIS DOCUMENT ARE NOT PERMITTED AND QUALITY CONTROL DOCUMENTATION MUST REFLECT THAT THE ACCOMMODATIONS DEFINED ARE REFLECTED IN SAID PRODUCTS PRIOR TO SHIPMENT.

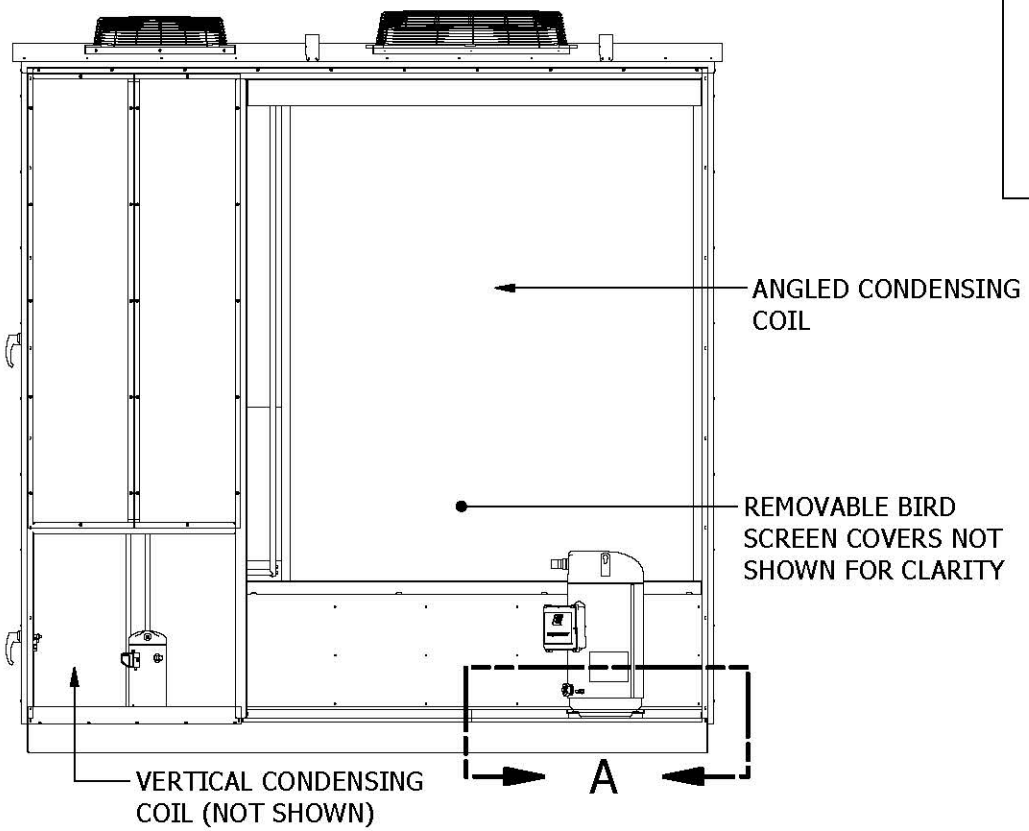

#12-14 X 1" LONG FASTENERS SHALL SECURE THE AIR ENTERING EDGE OF THE DRAIN PAN EDGE TO THE UNDERLYING G-CHANNEL FOR ANGLED CONDENSER COIL APPLICATIONS. FASTENERS SHALL BE SPACED AT A MAXIMUM OF 12" ON CENTER AND SHALL BE LOCATED ALONG THE ENTIRE EDGE OF THE DRAIN PAN.

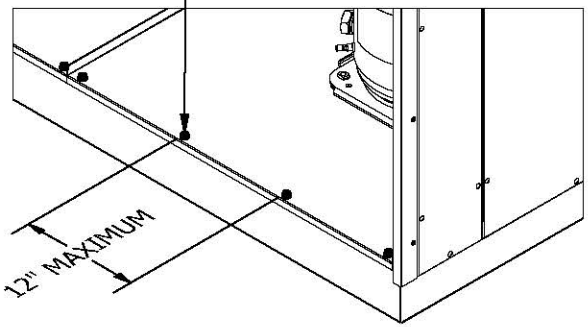

DETAIL A

Innovent Air Handling Equipment	ENGINEER: GMH	DESCRIPTION: OSHPD: ACCU DRAIN PAN ACCOMMODATIONS			
	DRAWN BY: GMH	PROJECT: OSHPD SEISMIC CERTIFICATION			REV # A
	DATE: 1/2/2014	SALES ORDER, LINE: 2084740	SECTION: N/A	TAG #	DRAWING NUMBER: OSHPD-1500
	FILE NAME: OSHPD-1500	MODEL # N/A			SHEET: 1 of 1

SPRING ISOLATED FANS: QEP DIRECT DRIVE

ONE-INCH ISOLATORS SHALL REQUIRE ADDITIONAL FASTENING WHEN INSTALLED WITHIN THE UNIT AS SHOWN BELOW.

THE INFORMATION DEFINED ON THIS DRAWING MUST BE INCORPORATED INTO ALL PRODUCTS DESIGNED AND FABRICATED TO MEET OSHPD SEISMIC REQUIREMENTS. CHANGES TO THIS DOCUMENT ARE NOT PERMITTED AND QUALITY CONTROL DOCUMENTATION MUST REFLECT THAT THE ACCOMMODATIONS DEFINED ARE REFLECTED IN SAID PRODUCTS PRIOR TO SHIPMENT.

ISOLATOR MOUNT RAILS SHALL BE SECURED WITH #12-14 3/4" LONG FASTENERS, MINIMUM OF THREE IN THE WIDTH DIRECTION OF THE RAIL AT THE FRONT AND BACK OF THE RAIL (FRONT SHOWN)

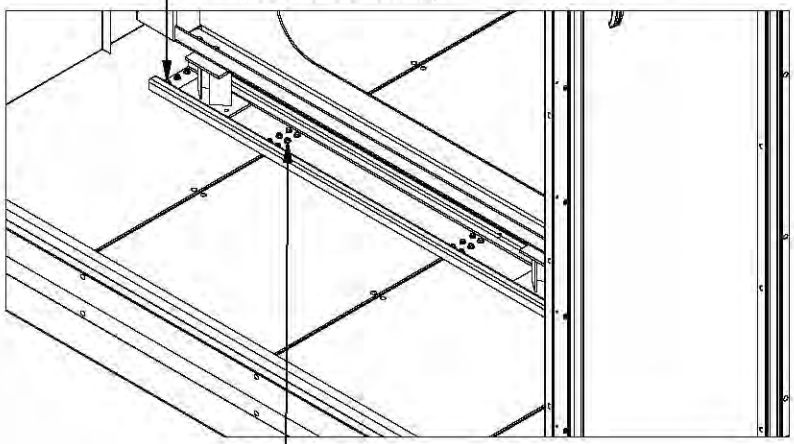

DETAIL A

RAIL SHALL CROSS A MINIMUM OF TWO INTERIOR C-CHANNELS AND BE FASTENED TO THOSE CHANNELS. IF FLOOR CONSISTS OF FULLY WELDED CONSTRUCTION, A FULLY WELDED CHANNEL OF MATERIAL WITH STRENGTH EQUIVALENT TO THAT OF A 10-GAUGE STEEL CHANNEL SHALL BE USED TO MOUNT THE FAN. FASTENERS SHALL BE #12-14, WITH A LENGTH ADEQUATE TO ENGAGE THE INTERIOR C-CHANNEL OR EQUIVALENT BY A MINIMUM OF TWO DIAMETERS OF FASTENER LENGTH.

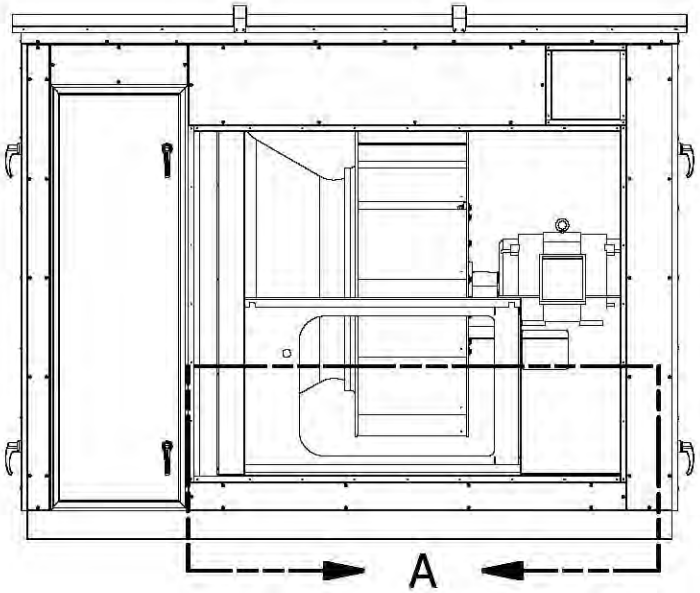

Innovent Air Handling Equipment	ENGINEER: GMH	DESCRIPTION: OSHPD: 1" SPRING ISOLATED FAN INSTALLATION			
	DRAWN BY: GMH	PROJECT: OSHPD SEISMIC CERTIFICATION			REV # A
	DATE: 1/2/2014	SALES ORDER, LINE: 2084740	SECTION: N/A	TAG #	DRAWING NUMBER: OSHPD-1600
	FILE NAME: OSHPD-1600	MODEL # N/A			SHEET: 1 of 1

SPRING ISOLATED FANS: QEP DIRECT DRIVE

TWO-INCH ISOLATORS SHALL HAVE THE ISOLATOR HOUSING FULLY WELDED TO THE MOUNT RAIL PRIOR TO ASSEMBLY TO THE FAN.

THEY SHALL ALSO REQUIRE ADDITIONAL FASTENING WHEN INSTALLED WITHIN THE UNIT AS SHOWN BELOW.

THE INFORMATION DEFINED ON THIS DRAWING MUST BE INCORPORATED INTO ALL PRODUCTS DESIGNED AND FABRICATED TO MEET OSHPD SEISMIC REQUIREMENTS. CHANGES TO THIS DOCUMENT ARE NOT PERMITTED AND QUALITY CONTROL DOCUMENTATION MUST REFLECT THAT THE ACCOMMODATIONS DEFINED ARE REFLECTED IN SAID PRODUCTS PRIOR TO SHIPMENT.

ISOLATOR MOUNT RAILS SHALL BE SECURED WITH #12-14 3/4" LONG FASTENERS, MINIMUM OF SEVEN IN THE WIDTH DIRECTION OF THE RAIL AT THE FRONT AND BACK OF THE RAIL (FRONT SHOWN)

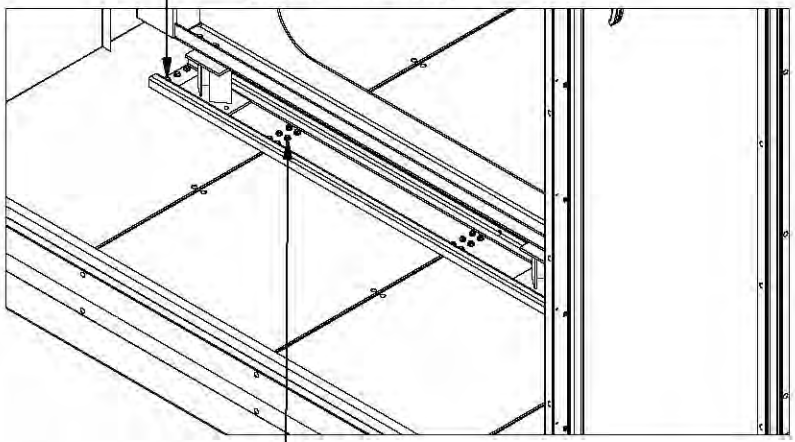

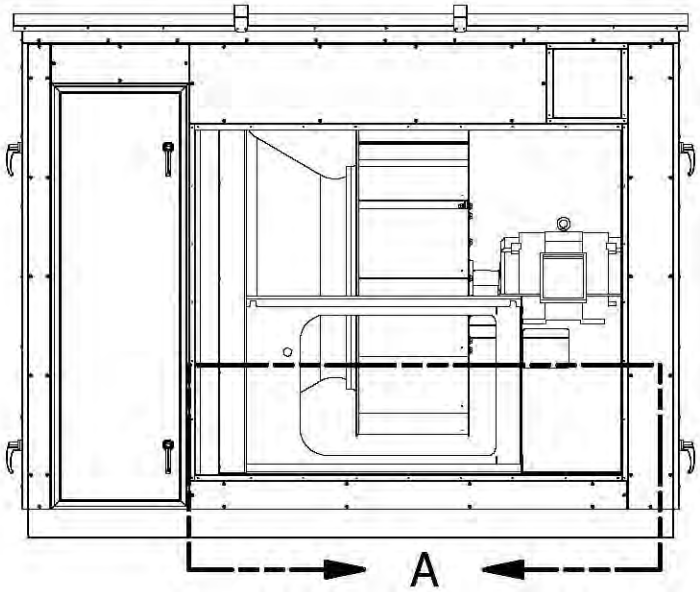

DETAIL A

RAIL SHALL CROSS A MINIMUM OF TWO INTERIOR C-CHANNELS AND BE FASTENED TO THOSE CHANNELS. IF FLOOR CONSISTS OF FULLY WELDED CONSTRUCTION, A FULLY WELDED CHANNEL OF MATERIAL WITH STRENGTH EQUIVALENT TO THAT OF A 10-GAUGE STEEL CHANNEL SHALL BE USED TO MOUNT THE FAN. FASTENERS SHALL BE #12-14, WITH A LENGTH ADEQUATE TO ENGAGE THE INTERIOR C-CHANNEL OR EQUIVALENT BY A MINIMUM OF TWO DIAMETERS OF FASTENER LENGTH.

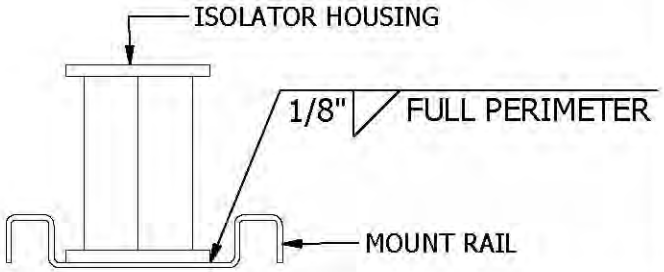

Innovent Air Handling Equipment	ENGINEER: GMH	DESCRIPTION: OSHPD: SPRING ISOLATED FAN INSTALLATION			
	DRAWN BY: GMH	PROJECT: OSHPD SEISMIC CERTIFICATION			REV # A
	DATE: 1/2/2014	SALES ORDER, LINE: 2084740	SECTION: N/A	TAG #	DRAWING NUMBER: OSHPD-1700
	FILE NAME: OSHPD-1700	MODEL # N/A			SHEET: 1 of 1

INDIRECT FIRED FURNACE INSTALLATION

FURNACES SHALL HAVE THE TUBE COILS SUPPORTED VIA THE STRUCTURE IDENTIFIED. ALL OTHER STANDARD FURNACE DESIGN AND INSTALLATION PROCESSES SHALL BE ADHERED TO.

THE INFORMATION DEFINED ON THIS DRAWING MUST BE INCORPORATED INTO ALL PRODUCTS DESIGNED AND FABRICATED TO MEET OSHPD SEISMIC REQUIREMENTS. CHANGES TO THIS DOCUMENT ARE NOT PERMITTED AND QUALITY CONTROL DOCUMENTATION MUST REFLECT THAT THE ACCOMMODATIONS DEFINED ARE REFLECTED IN SAID PRODUCTS PRIOR TO SHIPMENT.

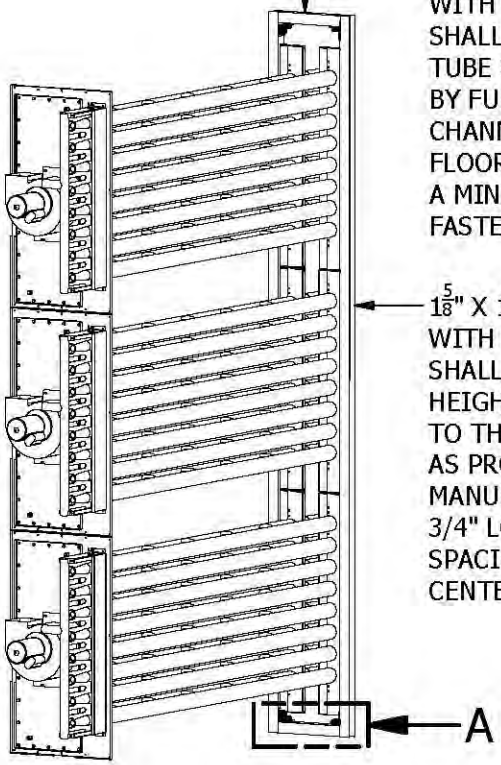

$1\frac{5}{8}$" X $1\frac{5}{8}$" STRUCT CHANNEL WITH SLOTTED HOLES SHALL RUN WIDTH OF FURNACE TUBE SUPPORTS AS PROVIDED BY FURNACE MANUFACTURER. CHANNEL SHALL BE SECURED TO FLOOR AND CEILING OF UNIT WITH A MINIMUM OF SIX #12-14 X 3/4" FASTENERS.

$1\frac{5}{8}$" X $1\frac{5}{8}$" STRUCT CHANNEL WITH SLOTTED HOLES SHALL RUN FULL UNIT CLEAR HEIGHT AND SHALL BE SECURED TO THE FURNACE TUBE SUPPORTS AS PROVIDED BY THE FURNACE MANUFACTURER WITH #12-14 X 3/4" LONG FASTENERS AT SPACING NOT TO EXCEED 8" ON CENTERS

FURNACES AS INSTALLED IN TEST UNIT (VEST PANEL AND ASSOCIATED CONTROLS NOT SHOWN FOR CLARITY)

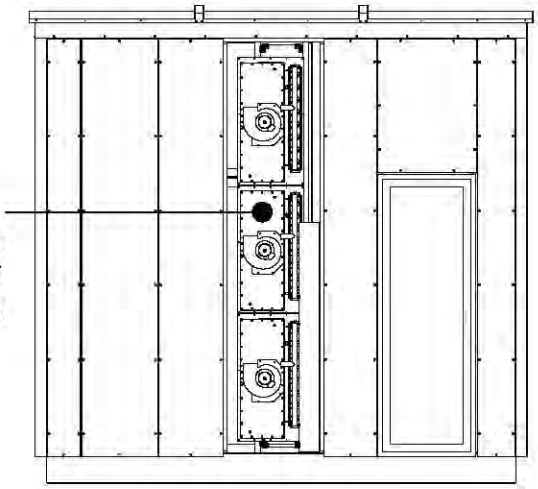

DETAIL A

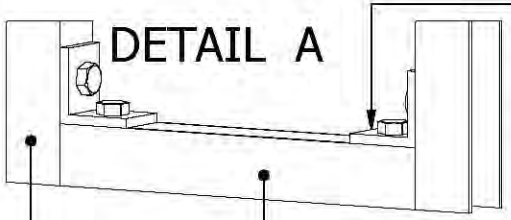

HORIZONTAL AND VERTICAL STRUCT MEMBERS SHALL BE SECURED TO ONE ANOTHER WITH $\frac{1}{4}$" BRACKETS AND $\frac{1}{2}$" DIAMETER GRADE 5 BOLTS AT THE TOP AND BOTTOM INTERFACE.

VERTICAL STRUT MEMBER

HORIZONTAL STRUT MEMBER

Innovent Air Handling Equipment	ENGINEER: GMH	DESCRIPTION: OSHPD: INDIRECT FIRED FURNACE INSTALLATION			
	DRAWN BY: GMH	PROJECT: OSHPD SEISMIC CERTIFICATION			REV # A
	DATE: 1/2/2014	SALES ORDER, LINE: 2084740	SECTION: N/A	TAG #	DRAWING NUMBER: OSHPD-1800
	FILE NAME: OSHPD-1800	MODEL # N/A			SHEET: 1 of 1

HOUSED PLENUM FANS: HPA DIRECT DRIVE

THE INLET AND OUTLET OF EACH FAN REQUIRESTHE USE OF ADDITIONAL ATTACHMENT AS SHOWN BELOW.

IF ISOLATION IS PERMITTED, THE BALANCE OF THE DESIGN AND ASSEMBLY SHALL FOLLOW STANDARD PROCEDURES.

THE INFORMATION DEFINED ON THIS DRAWING MUST BE INCORPORATED INTO ALL PRODUCTS DESIGNED AND FABRICATED TO MEET OSHPD SEISMIC REQUIREMENTS. CHANGES TO THIS DOCUMENT ARE NOT PERMITTED AND QUALITY CONTROL DOCUMENTATION MUST REFLECT THAT THE ACCOMMODATIONS DEFINED ARE REFLECTED IN SAID PRODUCTS PRIOR TO SHIPMENT.

DETAIL A

ATTACHMENT METHOD SHOWN BELOW SHALL BE PERFORMED ON ALL FOUR SIDES OF THE INLET OF EACH FAN

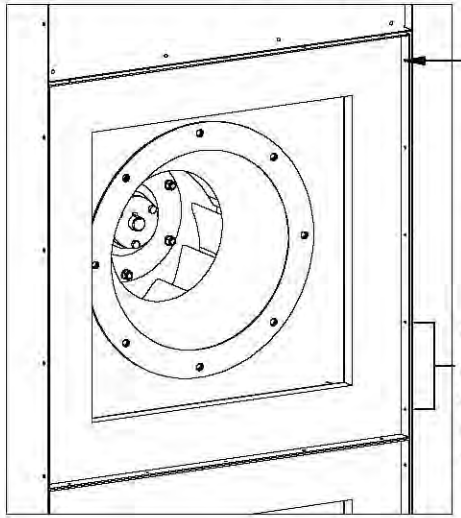

MANUFACTURER MOUNT HOLE SHALL BE UTILIZED TO SECURE FAN TO WALL WITH #12-14 X 3/4" LONG FASTENER

CENTER DISTANCE BETWEEN MANUFACTURER MOUNT HOLE SHALL BE SECURED WITH A MINIMUM OF TWO #12-14 X 3/4" FASTENERS.

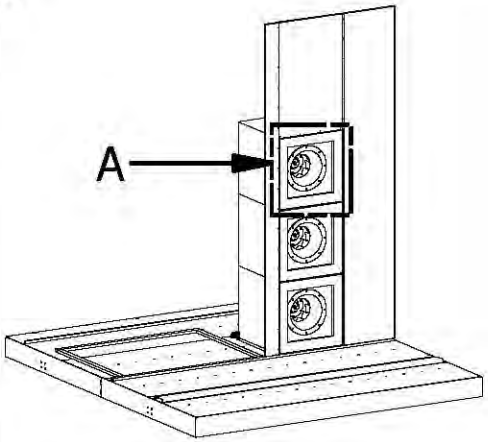

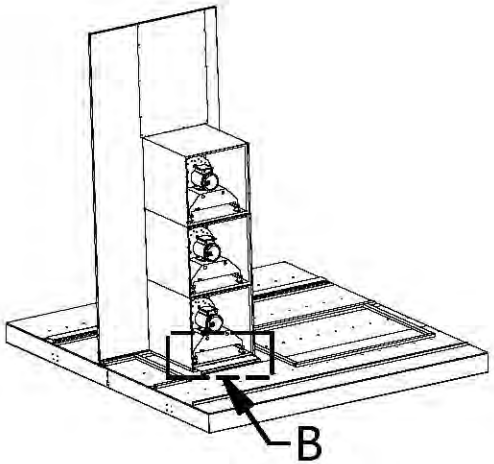

DETAIL B

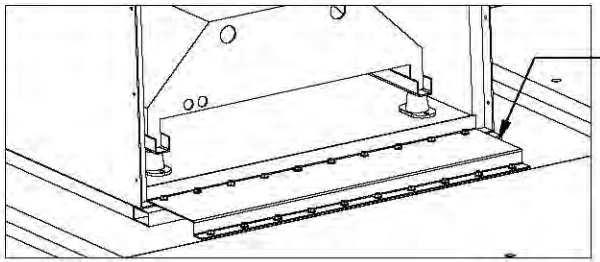

FAN OUTLET BRACKET SHALL BE UTILIZED ON ANY FAN MOUNTED TO THE FLOOR. FASTENERS SHALL BE SPACED ON CENTER DISTANCES NOT TOO EXCEED 3 INCHES AND SHALL BE #10-16 X 3/4" LONG. IF FLOOR CONSTRUCTION IS FULLY WELDED, IT IS ACCEPTABLE TO WELD THE EDGE IN CONTACT WITH THE FLOOR.

FAN OUTLET MOUNT BRACKET

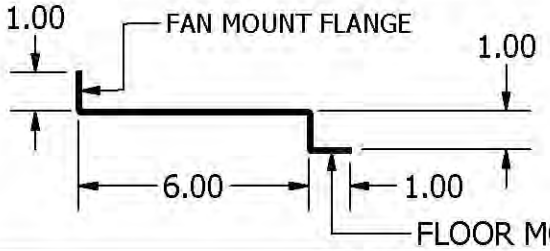

Innovent Air Handling Equipment	ENGINEER: GMH	DESCRIPTION: OSHPD: HOUSED PLENUM FAN INSTALLATION			
	DRAWN BY: GMH	PROJECT: OSHPD SEISMIC CERTIFICATION			REV # A
	DATE: 1/2/2014	SALES ORDER, LINE: 2084740	SECTION: N/A	TAG #	DRAWING NUMBER: OSHPD-1900
	FILE NAME: OSHPD-1900	MODEL # N/A			SHEET: 1 of 1

HOUSED PLENUM FANS: HPA DIRECT DRIVE

FAN AND MOTOR COMBINATIONS THAT EXCEED A WEIGHT OF 260 LBS REQUIRE ATTACHMENT BEYOND STANDARD PROCESSES. THE FOLLOWING IS REQUIRED FOR ALL INSTALLATIONS IN EXCESS OF THE WEIGHT DEFINED ABOVE. NOTE - WEIGHT SHOWN APPLIES TO A SINGLE HPA FAN AND MOTOR COMBINATION.

THE INFORMATION DEFINED ON THIS DRAWING MUST BE INCORPORATED INTO ALL PRODUCTS DESIGNED AND FABRICATED TO MEET OSHPD SEISMIC REQUIREMENTS. CHANGES TO THIS DOCUMENT ARE NOT PERMITTED AND QUALITY CONTROL DOCUMENTATION MUST REFLECT THAT THE ACCOMMODATIONS DEFINED ARE REFLECTED IN SAID PRODUCTS PRIOR TO SHIPMENT.

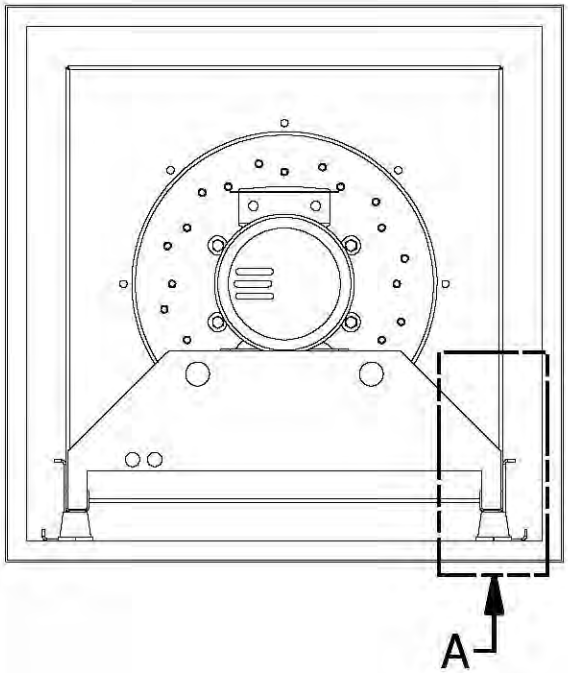

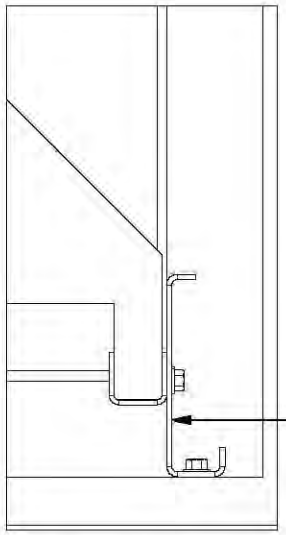

DETAIL A

(RIS ISOLATOR NOT SHOWN FOR CLARITY)

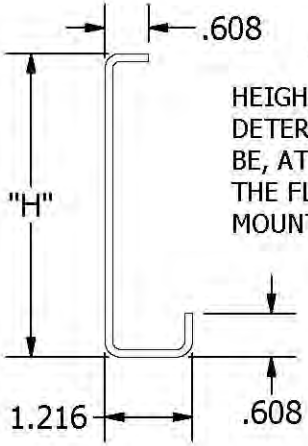

MOUNT BRACKET PROFILE

HEIGHT OF BRACKET, "H", SHALL BE DETERMINED BY FAN SIZE. IT SHALL BE, AT A MINIMUM, THE DISTANCE FROM THE FLOOR SURFACE TO THE TOP OF THE MOUNT RAIL PLUS TWO INCHES.

BRACKET SHALL BE SECURED TO HPA MOUNT RAIL AND FLOOR SURFACE OF FAN HOUSING WITH #12-14 X 1" LONG FASTENERS NOT TO EXCEED 8" SPACING ON CENTERS. BRACKET SHALL BE PLACED ON EACH SIDE OF THE HPA FAN.

Innovent Air Handling Equipment

ENGINEER: GMH	DESCRIPTION: OSHPD: HOUSED PLENUM FAN ATTACHMENT			
DRAWN BY: GMH	PROJECT: OSHPD SEISMIC CERTIFICATION			REV # A
DATE: 1/2/2014	SALES ORDER, LINE: 2084740	SECTION: N/A	TAG #	DRAWING NUMBER: OSHPD-2000
FILE NAME: OSHPD-2000	MODEL # N/A			SHEET: 1 of 1